STATE OF OHIO

DEPARTMENT OF TRANSPORTATION

CUY-IR490/SR010-2.09/19.28

CITY OF CLEVELAND

CUYAHOGA COUNTY

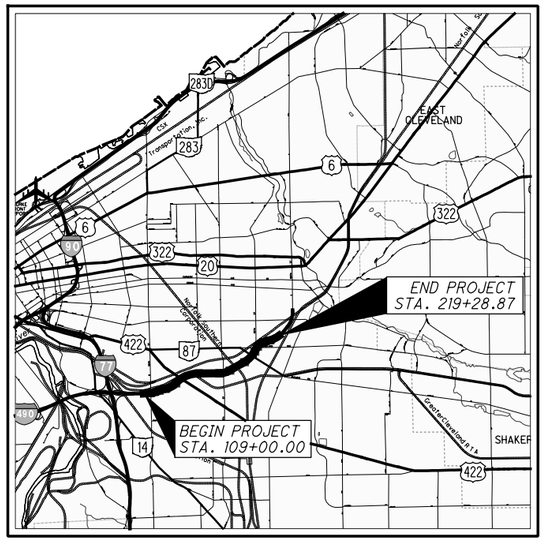

LOCATION MAP

LATITUDE: 41°29'08" LONGITUDE: 81°37'22"

SCALE IN MILES

0 1 2 3 4

N

PORTION TO BE IMPROVED
INTERSTATE HIGHWAY
FEDERAL ROUTES
STATE ROUTES
COUNTY & TOWNSHIP ROADS
OTHER ROADS

DESIGN DESIGNATION

CURRENT ADT (2017)	35,820
DESIGN YEAR ADT (2020)	48,230
DESIGN HOURLY VOLUME (2020)	3,580
DIRECTIONAL DISTRIBUTION	58%
TRUCKS (24 HOUR B&C)	6%
DESIGN SPEED	40 MPH
LEGAL SPEED	35 MPH
DESIGN FUNCTIONAL CLASSIFICATION	URBAN PRINCIPAL ARTERIAL
NHS PROJECT	NO

DESIGN EXCEPTIONS

NONE

UNDERGROUND UTILITIES

CONTACT BOTH SERVICES TWO WORKING DAYS **BEFORE YOU DIG.**

OHIO Utilities Protection SERVICE — *Call Before You Dig* **1-800-362-2764**

(Non-members must be called directly)

OIL & GAS PRODUCERS UNDERGROUND PROTECTION SERVICE **1-800-925-0988**

The Kokosing Design-Build Team

Kokosing | Michael Baker | Richland Engineering | Brownstone Grey

ENGINEERS SEAL:

BRIDGE PLANS:

STATE OF OHIO — KIMBERLY A. GUICE E-72265 — REGISTERED PROFESSIONAL ENGINEER

SIGNED: Kimberly A. Guice

DATE: 06/20/2019

ENGINEERS SEAL:

CATENARY PLANS:

STATE OF OHIO — JAMES W. ADAMS E-84329 — REGISTERED PROFESSIONAL ENGINEER

SIGNED: James W. Adams

DATE: 06/20/2019

BU-19
OH-10 BRIDGES OVER GCRTA BLUE AND GREEN LINES AND GCRTA CATENARY MODIFICATIONS

INDEX OF SHEETS:

SEE SHEET 2

PLAN PREPARED BY:

Michael Baker INTERNATIONAL

1111 SUPERIOR AVENUE EAST, SUITE 2300
CLEVELAND, OHIO 44114

ODOT STANDARD CONSTRUCTION DRAWINGS				CITY OF CLEVELAND STANDARD CONSTRUCTION DRAWINGS		ODOT SUPPLEMENTAL SPECIFICATIONS		SPECIAL PROVISIONS
A-1-69	07/19/02					800	04/15/16	GCRTA STANDARDS:
AS-1-15	07/17/15							SECTION 014500
AS-2-15	07/17/15							SECTION 015010
EXJ-4-87	07/19/02							SECTION 015020
HL-50.21	07/15/16							
SBR-1-13	01/17/14							
VPF-1-90	07/17/15							
BR-2-15	07/17/15							
HL-30.31	01/17/14					ODOT SUPPLEMENTS		
HL-20.14	01/16/15							
DM-1.1	01/15/16					1078	12/31/12	
						1083	04/15/16	

NO.	DATE	DESCRIPTION
0	2019-06-20	RFC

ISSUE RECORD

FEDERAL PROJECT NO. E140 (249)

PID NO. 96833

CONSTRUCTION PROJECT NO. 17-3000

RAILROAD INVOLVEMENT NORFOLK SOUTHERN GCRTA

CUY-IR490/SR010-2.09/19.28

RECORD PLANS

RECORD PLANS

RECORD PLANS

BU-19 - GCRTA BLUE/GREEN BRIDGES & CATENARY MODIFICATIONS

...\BU-19\96833_GT019.dgn 6/27/2019 4:51:25 PM Christopher.Lemley

ISSUE NO.	RECORD DATE	PAGE NO.	SHEET TITLE
0	2019-06-20	1	TITLE SHEET
8	2024-09-10	2	INDEX OF SHEETS
1	2024-09-10	3	BRIDGE GENERAL NOTES (1 OF 3)
0	2019-06-20	4	BRIDGE GENERAL NOTES (2 OF 3)
1	2024-09-10	5	BRIDGE GENERAL NOTES (3 OF 3)
3	2021-05-18	6	EB BRIDGE SITE PLAN (1 OF 2)
1	2024-09-10	7	EB BRIDGE SITE PLAN (2 OF 2)
0	2019-06-20	8	EB BRIDGE GENERAL PLAN
1	2024-09-10	9	EB BRIDGE FOUNDATION PLAN
2	2024-09-10	10	EB BRIDGE REAR ABUTMENT PLAN AND ELEVATION
1	2024-09-10	11	EB BRIDGE REAR ABUTMENT SECTIONS
2	2024-09-10	12	EB BRIDGE FORWARD ABUTMENT PLAN AND ELEVATION
1	2024-09-10	13	EB BRIDGE FORWARD ABUTMENT WINGWALL DETAILS
1	2024-09-10	14	EB BRIDGE FORWARD ABUTMENT SECTIONS
0	2019-06-20	15	EB BRIDGE ABUTMENT CONDUIT DETAILS
0	2019-06-20	16	EB BRIDGE PIER 1 PLAN AND ELEVATION
1	2024-09-10	17	EB BRIDGE PIER 1 SECTIONS
0	2019-06-20	18	EB BRIDGE PIER 2 PLAN AND ELEVATION
1	2024-09-10	19	EB BRIDGE PIER 2 SECTIONS
1	2024-09-10	20	EB BRIDGE ELASTOMERIC BEARING DETAILS
2	2024-09-10	21	EB BRIDGE TRANSVERSE SECTION
2	2024-09-10	22	EB BRIDGE FRAMING PLAN
0	2019-03-13	23	EB BRIDGE GIRDER ELEVATION
0	2019-03-13	24	EB BRIDGE DEFLECTION AND CAMBER TABLE (1 OF 6)
0	2019-03-13	25	EB BRIDGE DEFLECTION AND CAMBER TABLE (2 OF 6)
0	2019-03-13	26	EB BRIDGE DEFLECTION AND CAMBER TABLE (3 OF 6)
0	2019-03-13	27	EB BRIDGE DEFLECTION AND CAMBER TABLE (4 OF 6)
0	2019-03-13	28	EB BRIDGE DEFLECTION AND CAMBER TABLE (5 OF 6)
0	2019-03-13	29	EB BRIDGE DEFLECTION AND CAMBER TABLE (6 OF 6)
0	2019-03-13	30	EB BRIDGE SPLICE DETAILS
1	2019-05-17	31	EB BRIDGE INTERMEDIATE K-FRAME AND UTILITY SUPPORT DETAILS
0	2019-03-13	32	EB BRIDGE LEAN ON BRACING DETAILS
1	2019-05-17	33	EB BRIDGE PIER K-FRAME DETAILS
2	2024-09-10	34	EB BRIDGE ABUTMENT K-FRAME DETAILS
1	2021-05-04	35	EB BRIDGE DECK PLAN (1 OF 2)
1	2021-05-04	36	EB BRIDGE DECK PLAN (2 OF 2)
0	2019-03-13	37	EB BRIDGE FINAL DECK SURFACE ELEVATION TABLE
0	2019-03-13	38	EB BRIDGE DECK SCREED ELEVATION TABLE
0	2019-03-13	39	EB BRIDGE TOP OF HAUNCH ELEVATION TABLE
1	2024-09-10	40	EB BRIDGE PARAPET DETAILS (1 OF 7)
1	2024-09-10	41	EB BRIDGE PARAPET DETAILS (2 OF 7)
1	2019-05-17	42	EB BRIDGE PARAPET DETAILS (3 OF 7)
0	2019-03-13	43	EB BRIDGE PARAPET DETAILS (4 OF 7)
0	2019-03-13	44	EB BRIDGE PARAPET DETAILS (5 OF 7)
1	2024-09-10	45	EB BRIDGE PARAPET DETAILS (6 OF 7)
1	2024-09-10	46	EB BRIDGE PARAPET DETAILS (7 OF 7)
2	2024-09-10	47	EB BRIDGE REAR APPROACH SLAB DETAILS
2	2024-09-10	48	EB BRIDGE FORWARD APPROACH SLAB DETAILS
2	2024-09-10	49	EB BRIDGE APPROACH SLAB INSTALLATION SECTIONS
0	2019-06-20	50	EB BRIDGE PYLON DETAILS
0	2019-06-20	51	EB BRIDGE REINFORCING SCHEDULE (1 OF 5)
1	2024-09-10	52	EB BRIDGE REINFORCING SCHEDULE (2 OF 5)
0	2019-06-20	53	EB BRIDGE REINFORCING SCHEDULE (3 OF 5)
1	2020-06-10	54	EB BRIDGE REINFORCING SCHEDULE (4 OF 5)
1	2024-09-10	55	EB BRIDGE REINFORCING SCHEDULE (5 OF 5)

ISSUE NO.	RECORD DATE	PAGE NO.	SHEET TITLE
2	2024-09-10	56	WB BRIDGE SITE PLAN (1 OF 2)
1	2024-09-10	57	WB BRIDGE SITE PLAN (2 OF 2)
0	2019-06-20	58	WB BRIDGE GENERAL PLAN
1	2024-09-10	59	WB BRIDGE FOUNDATION PLAN
2	2024-09-10	60	WB BRIDGE REAR ABUTMENT PLAN AND ELEVATION
1	2024-09-10	61	WB BRIDGE REAR ABUTMENT SECTIONS
2	2024-09-10	62	WB BRIDGE FORWARD ABUTMENT PLAN AND ELEVATION
1	2024-09-10	63	WB BRIDGE FORWARD ABUTMENT WINGWALL DETAILS
1	2024-09-10	64	WB BRIDGE FORWARD ABUTMENT SECTIONS
0	2019-06-20	65	WB BRIDGE PIER 1 PLAN AND ELEVATION
1	2024-09-10	66	WB BRIDGE PIER 1 SECTIONS
0	2019-06-20	67	WB BRIDGE PIER 2 PLAN AND ELEVATION
1	2024-09-10	68	WB BRIDGE PIER 2 SECTIONS
0	2019-06-20	69	WB BRIDGE ELASTOMERIC BEARING DETAILS
2	2021-05-18	70	WB BRIDGE TRANSVERSE SECTION
1	2019-05-17	71	WB BRIDGE FRAMING PLAN
1	2024-09-10	72	WB BRIDGE GIRDER ELEVATION
0	2019-03-13	73	WB BRIDGE DEFLECTION AND CAMBER TABLE (1 OF 4)
0	2019-03-13	74	WB BRIDGE DEFLECTION AND CAMBER TABLE (2 OF 4)
0	2019-03-13	75	WB BRIDGE DEFLECTION AND CAMBER TABLE (3 OF 4)
0	2019-03-13	76	WB BRIDGE DEFLECTION AND CAMBER TABLE (4 OF 4)
0	2019-03-13	77	WB BRIDGE SPLICE DETAILS
0	2019-03-13	78	WB BRIDGE INTERMEDIATE K-FRAME DETAILS
0	2019-03-13	79	WB BRIDGE PIER K-FRAME DETAILS
0	2019-03-13	80	WB BRIDGE ABUTMENT K-FRAME DETAILS
2	2024-09-10	81	WB BRIDGE DECK PLAN (1 OF 2)
2	2024-09-10	82	WB BRIDGE DECK PLAN (2 OF 2)
1	2024-09-10	82A	DRFI 128 RESPONSE BLUE GREEN SUPPLEMENTAL HAUNCH REBAR
0	2019-03-13	83	WB BRIDGE FINAL DECK SURFACE ELEVATION TABLE
0	2019-03-13	84	WB BRIDGE DECK SCREED ELEVATION TABLE
1	2024-09-10	85	WB BRIDGE TOP OF HAUNCH ELEVATION TABLE
0	2019-03-13	86	WB BRIDGE PARAPET DETAILS (1 OF 7)
0	2019-03-13	87	WB BRIDGE PARAPET DETAILS (2 OF 7)
1	2019-05-17	88	WB BRIDGE PARAPET DETAILS (3 OF 7)
0	2019-03-13	89	WB BRIDGE PARAPET DETAILS (4 OF 7)
0	2019-03-13	90	WB BRIDGE PARAPET DETAILS (5 OF 7)
1	2024-09-10	91	WB BRIDGE PARAPET DETAILS (6 OF 7)
1	2024-09-10	92	WB BRIDGE PARAPET DETAILS (7 OF 7)
2	2024-09-10	93	WB BRIDGE REAR APPROACH SLAB DETAILS
2	2024-09-10	94	WB BRIDGE FORWARD APPROACH SLAB DETAILS
2	2024-09-10	95	WB BRIDGE APPROACH SLAB INSTALLATION SECTIONS
0	2019-06-20	96	WB BRIDGE PYLON DETAILS
0	2019-06-20	97	WB BRIDGE REINFORCING SCHEDULE (1 OF 5)
1	2024-09-10	98	WB BRIDGE REINFORCING SCHEDULE (2 OF 5)
0	2019-06-20	99	WB BRIDGE REINFORCING SCHEDULE (3 OF 5)
1	2020-06-10	100	WB BRIDGE REINFORCING SCHEDULE (4 OF 5)
1	2024-09-10	101	WB BRIDGE REINFORCING SCHEDULE (5 OF 5)
0	2019-06-20	102	GCRTA BLUE & GREEN LINES-PLAN (STA. 164+31 TO STA. 171+60)
0	2019-06-20	103	GCRTA BLUE & GREEN LINES-PLAN (S168A TO S169B)
0	2019-06-20	104	GCRTA BLUE & GREEN LINES-PLAN (S169B TO S171A)
0	2019-06-20	105	GCRTA BLUE & GREEN LINES-PLAN (S171A TO S171B)
0	2019-06-20	106	GCRTA BLUE & GREEN LINES-PROFILES (TEST TRACK CATENARY PROFILE)
0	2019-06-20	107	GCRTA BLUE & GREEN LINES-PROFILES (WB CATENARY PROFILE)
0	2019-06-20	108	GCRTA BLUE & GREEN LINES-PROFILES (EB CATENARY PROFILE)
0	2019-06-20	109	GCRTA BLUE & GREEN LINES-SECTIONS (S170B AT STATION 171+60)
0	2019-06-20	110	GCRTA BLUE & GREEN LINES-DETAILS (SHEET 1)

NO.	DATE	DESCRIPTION	NO.	DATE	DESCRIPTION
4	2020-06-10	DC041			
3	2020-06-08	DC040	8	2024-09-10	RECORD DRAWINGS
2	2019-06-20	RFC	7	2021-05-18	DC056
1	2019-05-17	DC006 DRFI005	6	2021-05-04	DRFI121
0	2019-06-20	RFC	5	2020-09-09	DC046
ISSUE RECORD			ISSUE RECORD		

INDEX OF SHEETS

RECORD PLANS

RECORD PLANS

CUY-IR490/SR010-2.09/19.28

RECORD PLANS

BU-19 - GCRTA BLUE/GREEN BRIDGES & CATENARY MODIFICATIONS
...\BU-19\96833_IN019.dgn 10/6/2025 5:18:47 PM Gregory.Hertler

STANDARD DRAWINGS AND SUPPLEMENTAL SPECIFICATIONS:

REFER TO THE FOLLOWING STANDARD BRIDGE DRAWINGS:

A-1-69	REVISED 7-19-02
AS-1-15	REVISED 7-17-15
AS-2-15	REVISED 7-17-15
EXJ-4-87	REVISED 7-19-02
HL-20.14	REVISED 1-16-15
HL-30.31	REVISED 1-17-14
HL-50.21	REVISED 10-20-16
SBR-1-13	REVISED 1-17-14
VPF-1-90	REVISED 7-17-15
BR-2-15	REVISED 7-17-15
DM-1.1	REVISED 1-15-16

AND THE FOLLOWING SUPPLEMENTAL SPECIFICATIONS:

800	REVISED 7-15-16

CONSTRUCTION OVER GCRTA TRACKS:

GCRTA REQUIREMENTS:
CONTRACTOR WILL COMPLY WITH THE LATEST REVISIONS OF THE FOLLOWING GCRTA STANDARDS.

SECTION 014500 - SAFETY PROCEDURES
SECTION 015010 - MAINTENANCE OF RAIL TRAFFIC AND RESUMPTION OF REVENUE SERVICE
SECTION 015020 - STANDARD RAIL FLAGGING

CONTRACTOR SHALL SURVEY GCRTA TOP OF RAIL ELEVATIONS AT A MINIMUM INTERVAL OF 25 FEET PRIOR TO INSTALLATION OF SHEETING ADJACENT TO GCRTA TRACKS. UPON REMOVAL OF SHEETING AND PRIOR TO RESUMPTION OF REVENUE SERVICE, TRACKS SHALL BE SURVEYED TO ENSURE WITHIN TOLERANCE, AS ESTABLISHED BY THE ENGINEER. THE CONTRACTOR SHALL RELINE TRACKS AS NECESSARY TO RAISE WITHIN TOLERANCE.

DESIGN SPECIFICATIONS:

THIS STRUCTURE CONFORMS TO THE "LRFD BRIDGE DESIGN SPECIFICATIONS", 7TH EDITION, ADOPTED BY THE AMERICAN ASSOCIATION OF STATE HIGHWAY AND TRANSPORTATION OFFICIALS, SEVENTH EDITION, INCLUDING THE 2015 INTERIM REVISIONS AND THE ODOT BRIDGE DESIGN MANUAL, 2007 (DATED 07-15-16).

SPECIAL DESIGN SPECIFICATIONS:

THIS BRIDGE REQUIRED THE USE OF A THREE DIMENSIONAL MODEL USING FINITE ELEMENT METHOD TO ANALYZE THE STRUCTURE. THE COMPUTER PROGRAM USED FOR STRUCTURAL ANALYSIS WAS MIDAS CIVIL 2018 VERSION 2.3, BUILD DATE APRIL 23 2018. THIS PROGRAM WAS USED TO DESIGN THE STEEL GIRDERS AND BRACING MEMBERS, AND TO CALCULATE REACTIONS FOR THE DESIGN OF THE BEARINGS AND SUBSTRUCTURE.

DEAD LOAD DISTRIBUTION: THE NONCOMPOSITE DEAD LOAD WAS DISTRIBUTED EVENLY TO THE GIRDERS BASED UPON THE TRIBUTARY WIDTH OF THE GIRDERS. COMPOSITE DEAD LOADS, INCLUDING THE FUTURE WEARING SURFACE, SIDEWALKS, PARAPET AND FENCE, WERE DISTRIBUTED TO THE GIRDERS VIA THE COMPOSITE CONCRETE DECK.

LIVE LOAD DISTRIBUTION FACTORS: THE DESIGN ANALYSIS WAS CARRIED OUT BY APPLYING THE DESIGN TRUCK AND LANE LOADS DIRECTLY TO THE FINITE ELEMENT MODEL'S COMPOSITE DECK, RATHER THAN BY USING CALCULATED DISTRIBUTION FACTORS.

DESIGN DATA:

CONCRETE CLASS QC2 - COMPRESSIVE STRENGTH 4500 PSI (SUPERSTRUCTURE)
CONCRETE CLASS QC1 - COMPRESSIVE STRENGTH 4000 PSI (SUBSTRUCTURE AND CONCRETE FILLED STEEL TUBES)
CONCRETE CLASS QC3 - COMPRESSIVE STRENGTH 4500 PSI (SUBSTRUCTURE, EB PIER 1 CAP)
REINFORCING STEEL - MINIMUM YIELD STRENGTH 60 KSI
STRUCTURAL STEEL - ASTM A709 GRADE 50W - YIELD STRENGTH 50 KSI
30" DIA. SPIRAL WELDED STEEL PILE - ASTM A 252 GRADE 3 MODIFIED, YIELD STRENGTH 50 KSI (¾" THICKNESS).
THREADED RODS - ASTM F1554 GRADE 105 - YIELD STRENGTH 105,000 PSI.
TYPE III A325 BOLTS SHALL BE USED FOR WEATHERING STEEL.

16" DIA. PILES - ASTM A252, TYPE 3 (Fy=70 KSI) PILE WALL THICKNESS FOR 16" DIA. PILES IS ⅜" (WB PIER 1).
16" DIA. PILES - ASTM A252, TYPE 3 (Fy=45 KSI) PILE WALL THICKNESS FOR 16" DIA. PILES IS ⅜" (ALL OTHER LOACTIONS).

DESIGN LOADING:

HL-93
FUTURE WEARING SURFACE (FWS) OF 0.060 KIPS/SQ. FT.
SIDEWALK LOADING OF 0.075 KIPS/SQ. FT.

DECK PROTECTION METHOD:

EPOXY COATED REINFORCING STEEL
2½" CONCRETE COVER

MONOLITHIC WEARING SURFACE:

MONOLITHIC WEARING SURFACE IS ASSUMED, FOR DESIGN PURPOSES, TO BE 1 INCH THICK.

OPERATIONAL IMPORTANCE:

A LOAD MODIFIER OF 1.0 HAS BEEN ASSUMED FOR THE DESIGN OF THIS STRUCTURE IN ACCORDANCE WITH THE AASHTO LRFD BRIDGE DESIGN SPECIFICATIONS, ARTICLE 1.3.5 AND THE ODOT BRIDGE MANUAL, 2007.

ITEM 512 - SEALING OF CONCRETE SURFACES, AS PER PLAN:

APPLY A PERMANENT GRAFFITI COATING QUALIFIED ACCORDING TO SUPPLEMENT 1083 THAT IS COMPATIBLE WITH THE CONCRETE SEALER OVER WHICH IT IS APPLIED. APPLY THE GRAFFITI COATING IN ACCORDANCE WITH THE MANUFACTURER'S PRINTED INSTRUCTIONS.

THE ANTI-GRAFFITI COATING SHALL ALSO MEET THE FOLLOWING REQUIREMENTS:

THE MATERIAL SHALL BE A SINGLE COMPONENT, RTV (ROOM TEMPERATURE VULCANIZED), NEUTRAL MOISTURE CURE, PERMANENT (NON-SACRIFICIAL), TYPE III (WATER CLEANABLE) POLYSILOXANE (SILICONE) ANTI-GRAFFITI COATING (FREE OF ANY WAXES, EPOXIES, OR POLYURETHANE COMPONENTS).

THE COATING SHALL BE A ONE COAT SYSTEM (NO PRIMER) CAPABLE OF BEING SPRAY APPLIED TO A DRY FILM THICKNESS OF 15 MILS (375 MICRONS) WITHOUT RUNS OF SAGS (MULTIPLE COAT APPLICATION ACCEPTABLE FOR BRUSH/ROLLER USAGE AND PRIMER USAGE ACCEPTABLE FOR SPECIALTY SUBSTRATES SUCH AS GALVANIZED METAL).

THE COATING SHALL EMIT LESS THAN 300 G/L (2.5 POUNDS PER GALLON) OF VOLATILE ORGANIZE COMPOUNDS (EPA METHOD 24).

THE COATING SHALL MEET THE FOLLOWING PERFORMANCE REQUIREMENTS:

1. CLEANABILITY LEVEL 1 (GRAFFITI COMPLETELY REMOVED WITH COLD WATER POWER WASH) AS PER ASTM D7089 WITH LOW PRESSURE (1200 PSI) COLD WATER WASH AFTER 2000 HOURS ACCELERATED UV-CONDENSATION EXPOSURE IN ACCORDANCE WITH ASTM D4587.
2. GRAFFITI REISTANCE LESS THEN 7.5 AS PER ASTM D6578 AFTER 2000 HOURS ACCELERATED UV-CONDENSATION EXPOSURE IN ACCORDACE WITH ASTM 4578.
3. NO SIGNS OF GRAFFITI STAINING AND MUST BE INTACT AND EXHIBIT NO SIGNS OF STREAKING, CRACKING, PINHOLING, DISCOLORING, OR OTHER VISIBLE COATING DEGRADATION UPON CASUAL OBSERVATION WHEN TESTED IN ACCORDANCE WITH TXDOT TEX 890-B, TYPE III METHOD.
4. BREATHABILITY OF 10 PERMS (+/- 3) PER ASTM D1653 USING "WET CUP METHOD".
5. ELONGATION AT BREAK GREATER THAN 100% AS PER ASTM D412 (USING DIE "D").
6. ADHESION RATING OF "8" - DIFFICULT TO REMOVE AS PER ASTM D6677 (ADHESION BY KNIFE).

ITEM 503 - UNCLASSIFIED EXCAVATION, AS PER PLAN:

PLACE AND COMPACT BACKFILL MATERIAL IN 6 INCH LIFTS FOR THE CONSTRUCTION OF THE BACKFILL BEHIND THE ABUTMENTS.

STEEL GIRDER AND K-FRAME DETAILING ASSUMPTIONS:

DETAIL STRUCTURAL STEEL TO FIT UNDER FULL STEEL DEAD LOAD AND PRIOR TO DECK PLACEMENT WITH THE WEBS OF PRIMARY MEMBERS PLUMB PER ODOT CMS 513.06.

REGULATED MATERIALS

REFER TO DEMOLITION PLANS IN BUILDABLE UNIT 15 - ROADWAY AND PAVEMENT, KINGBURY RUN TO END PROJECT FOR LOCATION AND IDENTIFICATION OF KNOWN REGULATED MATERIALS. HANDLING OF REGULATED MATERIALS SHALL BE IN ACCORDANCE WITH CONTRACT DOCUMENTS.

DECK PLACEMENT DESIGN ASSUMPTIONS:

THE FOLLOWING ASSUMPTIONS OF CONSTRUCTION MEANS AND METHODS WERE MADE FOR THE ANALYSIS AND DESIGN OF THE SUPERSTRUCTURE, THE CONTRACTOR IS RESPONSIBLE FOR THE DESIGN OF THE FALSEWORK SUPPORT SYSTEM WITHIN THESE PARAMETERS AND WILL ASSUME RESPONSIBILITY FOR SUPERSTRUCTURE ANALYSIS FOR DEVIATION FROM THESE DESIGN ASSUMPTIONS.

EB: AN EIGHT WHEEL FINISHING MACHINE WITH A MAXIMUM WHEEL LOAD OF 3.18 KIPS FOR A TOTAL MACHINE LOAD OF 25.44 KIPS.
WB: AN EIGHT WHEEL FINISHING MACHINE WITH A MAXIMUM WHEEL LOAD OF 2.72 KIPS FOR A TOTAL MACHINE LOAD OF 21.76 KIPS.

A MINIMUM OUT-TO-OUT WHEEL SPACING AT EACH END OF THE MACHINE OF 103".

A MAXIMUM SPACING OF OVERHANG FALSEWORK BRACKETS OF 48".

A MAXIMUM DISTANCE FROM THE CENTERLINE OF THE FASCIA GIRDER TO THE FACE OF THE SAFETY HANDRAIL IS 68".

CONDUIT SUPPORTS

CONSTRUCT CONDUIT SUPPORTS AT THE LOCATIONS SHOWN IN THE PLANS. FURNISH AND INSTALL A STEEL EXPANSION JOINT. INSTALL CONDUIT AND STEEL EXPANSION JOINT PER THE MANUFACTURER'S SPECIFICATIONS.

ITEM 203 EMBANKMENT, AS PER PLAN:

PLACE AND COMPACT EMBANKMENT MATERIAL IN 6 INCH LIFTS FOR THE CONSTRUCTION OF THE APPROACH EMBANKMENT

ITEM 625 - STRUCTURE GROUNDING SYSTEM

STRUCTURE SHALL BE GROUNDED PER HL-50.21.

UTILITY BLOCKOUT BACKWALL PENETRATIONS

FORMED UTILITY BLOCKOUT ABUTMENT BACKWALL PENETRATIONS SHALL US 1" WAX FILLER, FILL COAT #6 AVAILIABLE FROM THE TRENTON CORPORATION, 7700 JACKSON ROAD, ANN ARBOR, MI 48103. PHONE NUMBER (734)424-3600 OR APPROVED EQUAL. THE MATERIAL AND INSTALLATION SHALL CONFORM TO THE MANUFACTURER'S SPECIFICATIONS.

ITEM 511 QC/QA CONCRETE, AS PER PLAN:

BRIDGE PARAPETS AND PYLONS SHALL UTILIZE A RUBBED FINISH PER CMS 511.15B.

ITEM 512 - SEALING OF CONCRETE SURFACES (EPOXY-URETHANE):

ALL EXPOSED CONCRETE SURFACES OF THE CONCRETE SUPERSTRUCTURE, AS PER PLAN DETAILS, SHALL BE SEALED WITH AN EPOXY-URETHANE SEALER (FEDERAL STANDARD 595C #27769).

ABBREVIATIONS:

ABUT. - ABUTMENT
ADT - AVERAGE DAILY TRAFFIC
ADTT - AVERAGE DAILY TRUCK TRAFFIC
APPR. - APPROACH
B - BOTTOM
℄ - BASELINE
B.F. - BACK FACE
BM - BENCHMARK
BOT. OR BTM. - BOTTOM
BRG. - BEARING
BUND. - BUNDLED
℄ - CENTERLINE
C/C - CENTER TO CENTER
C.I.P. - CAST-IN-PLACE
C.J. - CONSTRUCTION JOINT
CLR. - CLEAR
CMS - CONSTRUCTION AND MATERIAL SPECIFICATIONS
CONC. - CONCRETE
CONSTR. - CONSTRUCTION
CVN - CHARPY V-NOTCH
DIA. - DIAMETER
DIM. - DIMENSION
DWG. - DRAWING
E - EAST
EB - EASTBOUND
E.F. - EACH FACE
EL. OR ELEV. - ELEVATION
EOP - EDGE OF PAVEMENT
EQ. - EQUAL
EST. - ESTIMATED
EX. - EXISTING
EXP. - EXPANSION
F.A. - FORWARD ABUTMENT
F/F - FACE TO FACE
F.F. - FRONT FACE
FT. - FOOT OR FEET
FWD. - FORWARD
HMWM - HIGH MOLECULAR WEIGHT METHACRYLATE
HW - HIGH WATER
IN. - INCH
JT. - JOINT
L.F. - LEFT FORWARD
LT. - LEFT
MAX. - MAXIMUM
MIN. - MINIMUM
MISC. - MISCELLANEOUS
MSE - MECHANICALLY STABILIZED EARTH
N - NORTH
NB - NORTHBOUND
NO. - NUMBER
N.P.C.P.P. - NON-PERFORATED CORRUGATED PLASTIC PIPE
OHWM - ORDINARY HIGH WATER MARK
O/O - OUT TO OUT
P.C.P.P. - PERFORATED CORRUGATED PLASTIC PIPE
P.E.J.F. - PREFORMED EXPANSION JOINT FILLER
PROP. - PROPOSED
PSF - POUNDS PER SQUARE FOOT
P.V.I. - POINT OF VERTICAL INTERSECTION
Q - FLOW RATE
R - RADIUS
R.A. - REAR ABUTMENT
RCP - ROCK CHANNEL PROTECTION
REQD. - REQUIRED
R.F. - RIGHT FORWARD
R.R. - RAILROAD
RT. - RIGHT
R/W - RIGHT OF WAY
S - SOUTH
SB - SOUTHBOUND
SER. - SERIES
SHLDR - SHOULDER
SPA. - SPACE OR SPACES
STA. - STATION
STD. - STANDARD
STR - STRAIGHT
SUP - SHARED USE PATH
T - TOP
T&B - TOP & BOTTOM
TBR - TO BE REMOVED
TEMP. - TEMPORARY
T.O.S. OR T/S - TOP OF SLOPE
T/T - TOE TO TOE
TYP. - TYPICAL
U.N.O. - UNLESS NOTED OTHERWISE
VAR. - VARIES
V - VELOCITY
W - WEST
WB - WESTBOUND
WWR - WELDED WIRE REINFORCEMENT

CONSTRUCTION CLEARANCE

MAINTAIN A CONSTRUCTION CLEARANCE OF 12 FEET HORIZONTALLY FROM THE CENTER OF TRACKS AND 19.5 FEET VERTICALLY FROM A POINT LEVEL WITH THE TOP OF THE HIGHER RAIL, AND 8.5 FEET FROM THE CENTER OF TRACKS, AT ALL TIMES. TOP OF TEMPORARY SHEETING SHALL BE PLACED BELOW THE BOTTOM OF ADJACENT TIES.

ITEM 514 - PAINTING OF STRUCTURAL STEEL, AS PER PLAN

PARTIAL PAINTING OF A709 GRADE 50W STEEL : PAINT THE LAST 10 FT OF EACH BEAM/GIRDER END ADJACENT TO THE ABUTMENTS INCLUDING ALL CROSS FRAMES AND OTHER STEEL WITHIN THESE LIMITS. THE PRIME COAT SHALL BE 708.01. THE TOP COAT COLOR SHALL CLOSELY APPROACH FEDERAL STANDARD NO. 595B - 20045 OR 20059 (THE COLOR OF WEATHERING STEEL). PAINT SYSTEM PRIME COATING SHALL BE SHOP APPLIED AND THE REMAINING COATINGS SHALL BE FIELD APPLIED.

INTERMEDIATE DIAPHRAGMS:

DO NOT PLACE THE DECK CONCRETE UNTIL ALL INTERMEDIATE DIAPHRAGMS AND UTILITY SUPPORTS HAVE BEEN PROPERLY INSTALLED.

PRE-CONSTRUCTION SURVEY, VIBRATION MONITORING, AND VIDEO INSPECTION OF SEWERS

CONDUCT A PRE-CONSTRUCTION SURVEY ACCORDING TO THE SETTLEMENT AND VIBRATION MONITORING PLAN OF BUILDINGS, STRUCTURES, UTILITIES, AND CRITICAL LOCATIONS WITHIN THE LIMITS DETERMINED BY THE DBT VIBRATION SPECIALIST. PERFORM A PRE-CONSTRUCTION VIDEO INSPECTION ACCORDING TO CM&S 611 OF ALL SEWERS WITHIN THE INFLUENCE ZONES OF CONSTRUCTION. PERFORM SETTLEMENT AND VIBRATION MONITORING ACCORDING TO THE SETTLEMENT AND VIBRATION MONITORING PLAN DURING CONSTRUCTION. AFTER CONSTRUCTION IS SUBSTANTIALLY COMPLETE, PERFORM A SECOND VIDEO INSPECTION OF THE SEWERS. PROVIDE RECORDINGS OF THE VIDEOS TO THE DEPARTMENT AND MAINTAINING AGENCY FOR REVIEW.

NO.	DATE	DESCRIPTION
1	2024-09-10	RECORD DRAWINGS
0	2019-06-20	RFC

ISSUE RECORD

DESIGN AGENCY
Michael Baker INTERNATIONAL
1111 SUPERIOR AVE E. SUITE 2300, CLEVELAND, OH 44114

DESIGNED	DRAWN	REVIEWED	DATE
GMC	GMC	JWB	3/15/19
CHECKED	REVISED	STRUCTURE FILE NUMBER	
KAG		1801518	

RECORD PLANS

GENERAL NOTES (1 OF 3)
CUY-010-1978R/CUY-010-1976L
OH-10 EASTBOUND/WESTBOUND OVER GCRTA BLUE AND GREEN LINES

RECORD PLANS

CUY-IR490/SR010-2.09/19.28
PID No. 96833

1/3

3/110

BU-19 - GCRTA BLUE/GREEN BRIDGES & CATENARY MODIFICATIONS
...\BU-19\010_1978R_SN401.dgn 12/16/2024 3:24:14 PM Gregory.Hertler

ITEM 607 - VANDAL PROTECTION FENCE, AS PER PLAN

THE CONTRACTOR SHALL FURNISH ALL NECESSARY LABOR, MATERIALS AND EQUIPMENT TO FABRICATE, GALVANIZE, CLEAN, APPLY A TWO-COAT SHOP PAINT SYSTEM (EPOXY/URETHANE) AND INSTALL THE RAILING. ALL FENCE AND RAILING MATERIALS SHALL BE GALVANIZED AND PAINTED PER THIS NOTE.

A. FABRICATION OF THE RAILING SHALL BE IN ACCORDANCE WITH C&MS 513, UF LEVEL. COATING OF THE RAILING SHALL BE IN ACCORDANCE WITH C&MS 514, EXCEPT AS NOTED BELOW.

B. THE ARCHITECTURAL FENCING SHALL SATISFY THE MINIMUM DESIGN REQUIREMENTS FOR POSTS AND ANCHORAGES AS SPECIFIED IN STANDARD BRIDGE DRAWING VPF-1-90, "VANDAL PROTECTION FENCE".

C. THE FENCING SHALL BE CONSTRUCTED USING WELDED WIRE FABRIC WITH 10.5 GAGE CORE WIRE, GALVANIZED AFTER WELDING.

D. STEEL PLATES AND SHAPES SHALL BE ASTM A709 GRADE 36 OR 50. ALL OTHER MATERIALS SHALL BE IN ACCORDANCE WITH C&MS 707.10 OR 711.09.

E. THE GALVANIZED COATING SYSTEM MAY BE APPLIED BY A GALVANIZER NOT PRE-QUALIFIED AS A FABRICATION SHOP UNDER SUPPLEMENT 1078, BUT THE PRE-QUALIFIED FABRICATOR OF THE STRUCTURAL STEEL SHALL BE RESPONSIBLE FOR THE QUALITY OF THE APPLIED GALVANIZED COATING SYSTEM AND ANY REPAIRS, RE-FABRICATION AND ADDITIONAL ASSEMBLIES REQUIRED TO ASSURE THE FABRICATED STEEL MEETS THE PLAN REQUIREMENTS.

F. THE TWO SHOP COATS SHALL BE APPLIED IN A STRUCTURAL STEEL FABRICATION SHOP HAVING PERMANENT BUILDINGS PER 513.04 AND PREQUALIFIED AT THE UF LEVEL. THE PAINT QUALITY CONTROL SPECIALIST (QCS) SHALL BE QUALIFIED AS SPECIFIED IN 514.04.

G. PRIOR TO GALVANIZING, ALL CORNERS OF THERMALLY CUT OR SHEARED EDGES SHALL HAVE A 1/16-INCH RADIUS OR EQUIVALENT FLAT SURFACE AT A SUITABLE ANGLE.

H. GALVANIZE THE FABRICATED RAILING AND HARDWARE ACCORDING TO C&MS 711.02, EXCEPT THAT FABRICATED RAILING ELEMENTS SHALL NOT BE POST TREATED WITH WATER QUENCHING OR CHROMATE CONVERSION COATED.

I. AFTER GALVANIZATION, REMOVE ZINC HIGH SPOTS SUCH AS METAL DRIP LINE AND OTHERS THAT WOULD DETRACT FROM THE PAINT APPEARANCE BY SSPC SP2 OR SP3. TAKE CARE THAT THE BASE GALVANIZED COATING IS NOT REMOVED. CHECK REPAIRED AREAS FOR REQUIRED COATING THICKNESS.

J. REPAIR GALVANIZED COATINGS DAMAGED IN THE SHOP ACCORDING TO ASTM A780 METHOD A3. REPAIR GALVANIZED COATINGS DAMAGED IN THE FIELD ACCORDING TO ASTM A780 METHOD A1.

K. AFTER REMOVING HIGH SPOTS, CLEAN THE GALVANIZED COATING ACCORDING TO SSPC SP-1. THE CLEANING SOLUTION SHALL BE AN ALKALINE SOLUTION WITH A PH RANGING FROM A MINIMUM OF 11 TO A MAXIMUM OF 12. THIS SOLUTION CAN BE APPLIED BY IMMERSION, SPRAY OR SOFT NYLON BRUSH. FOLLOW CLEANING WITH A HOT WATER OR HOT PRESSURE WASHER RINSE. SEPARATE INDIVIDUAL PIECES AND POSITION TO FACILITATE DRAINAGE AND DRYING. THE PIECES SHALL BE COMPLETELY DRY BEFORE PROCEEDING.

L. AFTER CLEANING, ABRASIVE BLAST THE PIECES ACCORDING TO SSPC-SP7 BRUSH-OFF BLAST CLEANING. THE BLASTING OPERATION SHALL ROUGHEN THE GALVANIZED SURFACE TO AN ANGULAR SURFACE PROFILE OF 0.75 TO 1.00 MILS. SELECT THE BLASTING EQUIPMENT, TECHNIQUE AND ABRASIVE MATERIAL TO PROVIDE FOR THE SPECIFIED SURFACE PROFILE WITHOUT REMOVAL OF EXCESSIVE ZINC LAYERS. THE FINAL ZINC MILLAGE SHALL NOT BE LESS THAN 4.0 MILS. REMOVE ALL ABRASIVE RESIDUE WITH CLEAN COMPRESSED AIR OR OTHER METHODS ACCEPTABLE TO THE DEPARTMENT.

M. AFTER OBTAINING SURFACE PROFILE, SHOP APPLY A TWO COAT PAINT SYSTEM CONSISTING OF EPOXY INTERMEDIATE COAT AND A URETHANE FINISH COAT MEETING THE REQUIREMENTS OF C&MS 708.02. THE FINISH COAT SHALL MATCH FEDERAL COLOR STANDARD FS 595C-17038 BLACK. APPLY THE EPOXY COATING WITHIN 24 HOURS OF THE BRUSH-OFF BLASTING.

N. PRIOR TO FABRICATION OF THE RAILING SYSTEM, FABRICATE A SAMPLE RAILING PANEL OF A LENGTH AGREEABLE TO THE PROJECT ENGINEER WHICH INCLUDES TWO POST, ALL HARDWARE, INCIDENTALS AND COATINGS. THE PROJECT ENGINEER WILL USE THIS SAMPLE PANEL TO JUDGE ACCEPTANCE OF THE FABRICATION, COATINGS AND QUALITY CONTROL PROGRAM. AFTER THE REVIEW OF THIS SAMPLE, THE DEPARTMENT AND THE CONTRACTOR MAY AGREE UPON ANY FABRICATION, COATING, QUALITY CONTROL OR INSTALLATION CHANGES AS A MODIFICATION TO THESE NOTES. THE FABRICATION CAN PROCEED ANY TIME AFTER THE ACCEPTANCE OF THIS SAMPLE PANEL. THE SAMPLE PANEL MAY BE INCORPORATED INTO THE FINISHED WORK AT THE DISCRETION OF THE ENGINEER.

O. REPAIR DAMAGE TO THE PAINT SYSTEM CAUSED DURING STORAGE, TRANSPORTATION, ERECTION, ACCORDING TO C&MS 514.22. EXERCISE EXTREME CARE WHILE HANDLING THE STEEL DURING ERECTION, AND DURING SUBSEQUENT CONSTRUCTION OF THE RAILING AND FENCE. INSULATE THE STEEL FROM THE BINDING CHAINS BY SOFTENERS AND PAD ALL HOOKS AND SLINGS THAT ARE USED TO HOIST/ERECT THE MEMBERS.

P. ALL FENCE ANCHORS SHALL BE CAST INTO THE PARAPET. A WASHER AND NUT SHALL BE TACK WELDED TO THE BOTTOM OF THE THREADED ROD TO AVOID THE ANCHORS PULLING LOOSE WHEN THE TEMPLATES FOR THE BASEPLATES ARE STRIPPED. FENCE ANCHORAGE SHALL BE STAINLESS STEEL PER C&MS 730.10.

Q. RESTRAINT CABLES SHALL BE INSTALLED TO TIE THE FENCE POSTS, FENCE PANELS, ORNAMENTAL LIGHTS, AND THE WELDED WIRE FABRIC PANELS, SUCH THAT, IF A POST BREAKS OFF IN A VEHICLE IMPACT, THE POST ON THE OPPOSITE ENDS OF THE FAILED ONE WILL SUPPORT THE SUSPENDED PANELS AND POST.

COARSE AGGREGATE FOR CONCRETE

ALL COARSE AGGREGATE SHALL HAVE AN ABSORPTION OF 1 PERCENT OR GREATER AS DEFINED BY THE AMERICAN SOCIETY OF TESTING MATERIALS (ASTM) C127.

ITEM 511 - STAY-IN-PLACE FORMS

DESCRIPTION. IN ADDITION TO THE WORK REQUIREMENTS OF 511, EITHER PROVIDE TRADITIONAL BRIDGE DECK FORMS CONFORMING TO CMS 508 OR DESIGN, BUILD, PROVIDE AND CONSTRUCT GALVANIZED STEEL STAY-IN-PLACE (SIP) FABRICATED METAL FORMS CONFORMING TO CMS 508 AND THESE ADDITIONAL REQUIREMENTS.

DESIGN, BUILD, CONSTRUCT AND REMOVE SIP OR REMOVABLE FORMS WITHIN EIGHT FEET OF ALL DECK EXPANSION JOINTS AND FOUR FEET OF ALL THROUGH DECK DRAINAGE SYSTEMS.

DESIGN: SUBMIT CONSTRUCTION PLANS ACCORDING TO 501.05.B.3. DESIGN SIP FORMS TO SUPPORT THE SELF WEIGHT OF SIP FORMS, REINFORCEMENT, WET CONCRETE FOR THE DECK, ANY CONSTRUCTION EQUIPMENT LOADS, AND AT LEAST A 50 PSF LOAD FOR CONSTRUCTION LIVE LOADS. MEET THE DEFLECTION REQUIREMENTS OF 508.

DESIGN SIP FORMS THAT HAVE THE DEPTH OF THE FORM CORRUGATION FILLED WITH CONCRETE. SYNTHETIC MATERIALS SUCH AS EXPANDED POLYSTYRENE ARE NOT ALLOWED FOR FILLING THE FLUTES.

INCLUDE THE FOLLOWING INFORMATION IN THE CONSTRUCTION PLAN:
A. DESIGN CALCULATIONS.
B. PHYSICAL PROPERTIES OF THE SIP FORMS (GAGE, SECTION MODULUS, WEIGHT, DEPTH AND PITCH)
C. CROSS SECTION VIEW AND DIMENSIONS OF: SIP FORMS, SUPPORT ANGLES, CHANNEL CLOSURES, SAFETY STOPS, CLIPS, PLATES AND HARDWARE.
D. INCLUDE AN OVERALL LAYOUT PLAN WITH:

1. WORKING POINTS OR CONTROL ELEVATIONS NECESSARY TO SET SUPPORT ANGLES.
2. TYPICAL AND SPECIFIC CROSS SECTIONS OR DETAILS: SUPPORT CONNECTIONS TO THE STRUCTURAL MEMBERS, SIP FORM CONNECTIONS TO SUPPORTS, FORM LAPS AND CLOSURE SECTIONS.
3. MINIMUM BEARING LENGTHS (EDGE DISTANCES) OF SIP FORMS TO THE SUPPORT ANGLES.
4. WELDING DETAILS: SIZE, LENGTH, LOCATIONS, ELECTRODES AND PROCESS.

E. WORKER SAFETY RESTRICTIONS.
F. INSTALLATION INSPECTION CHECK LISTS.

MATERIALS: SUBMIT 501.06 TEST REPORTS AND WRITTEN ACCEPTANCE LETTERS TO THE ENGINEER. MATERIALS INSPECTION AND ACCEPTANCE IS PERFORMED BY THE ENGINEER AT THE PROJECT SITE. FURNISH FORM, SUPPORT MATERIALS AND HARDWARE CONFORMING THE FOLLOWING:

A. FORM AND SUPPORT MATERIAL, ASTM A653 HAVING A COATING DESIGNATION OF G235, AND CONFORMING TO THE MECHANICAL PROPERTIES THE DESIGN REQUIRES. STAY-IN-PLACE FORMS SHALL BE SHOP-GALVANIZED.
B. PROVIDE DECK FORMS WITH A 2-INCH MINIMUM FORM DEPTH.
C. PROVIDE MINIMUM MATERIAL THICKNESS AS FOLLOWS: SIP FORMS (20 GAGE), SUPPORT ANGLES (12 GAGE) AND SUPPORT BARS (12 GAGE).
D. SUPPLY DECK, SELF DRILLING FASTENERS WITH CADMIUM PLATING PER ASTM B766 WITH MINIMUM THICKNESS OF 5, TEN THOUSANDTHS. (0.0005 INCH). THE HEADS OF THESE FASTENERS WILL BE A HIGHLY VISIBLE COLOR, RED OR OTHER, TO AID INSPECTION.

WELDING: DO NOT WELD SIP FORMS OR THEIR SUPPORTS TO THE STEEL BRIDGE MEMBERS.

INSTALLATION LIMITATIONS.

A. CUTTING OR DRILLING STAY-IN-PLACE FORMS AFTER BEING SHOP-GALVANIZED IS PROHIBITED, EXCEPT AS NEEDED FOR INSTALLATION USING SCREWS.
B. PLACE FORMS ON FORM SUPPORTS. DO NOT INSTALL SIP FORMS DIRECTLY TO THE BRIDGE'S STRUCTURAL MEMBERS.
C. ADJUST THE SCREED ELEVATIONS BY PRORATING THE CONCRETE DEAD LOAD DEFLECTION TO ACCOUNT FOR THE ADDITIONAL PERMANENT DEAD LOADS ASSOCIATED WITH CONCRETE FILLED STAY IN PLACE FORMS.
D. SET THE HEIGHT OF THE FORM SUPPORTS TO DEVELOP THE ADJUSTED SCREED ELEVATIONS, DECK THICKNESS AND PLAN PROFILE.
E. PLACE SIP FORMS ON FORM SUPPORTS TO ACHIEVE MINIMUM BEARING LENGTH PER MANUFACTURE'S DESIGN.
F. CONNECT SIP FORMS TO FORM SUPPORTS BEFORE USING THE SIP AS A WORKING SURFACE AND BEFORE THE END OF EACH WORK SHIFT.
G. PROVIDE SAFETY STOPS TO ELIMINATE HAZARDS FROM SUDDEN UPLIFT AND LATERAL MOVEMENT. AFTER THE DECK CONCRETE MEETS THE LOADING REQUIREMENTS OF C&MS 511.17, REMOVE THE VISIBLE PORTION OF ALL SAFETY STOPS.
H. COATINGS DAMAGED CAUSED BY MECHANICAL CUTTING OR FIELD WELDING NEED NOT BE REPAIRED UNLESS SPECIFIED BY THE SIP FORM MANUFACTURER.

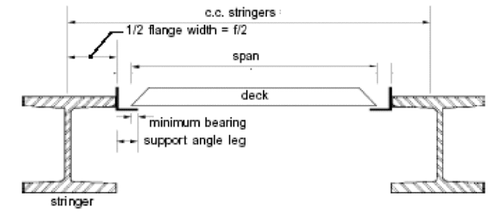

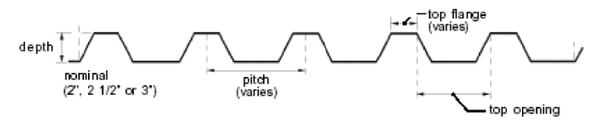

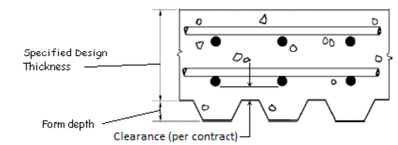

INSPECTION. THE ENGINEER WILL CHECK SIP MATERIALS MEET DESIGN REQUIREMENTS AND EVALUATE INSTALLATION BASED ON CONSTRUCTION PLAN.

GROUT FOR ANCHOR RODS

1. GROUT FOR ANCHOR RODS SHALL BE A CEMENT-BASED NON-SHRINK GROUT WITH EXTENDED WORKING TIME. THE CONTRACTOR SHALL HAVE THE OPTION OF USING THE FOLLOWING MATERIAL OR APPROVED EQUAL:

A.) MASTERFLOW 928 - BASF

2. GROUT SHALL BE SET IN ACCORDANCE WITH THE MANUFACTURER'S RECOMMENDATIONS. FOR TEMPERATURES BELOW 45°F, THE CONTRACTOR MAY SUBMIT TO THE ENGINEER A COLD WEATEHR GROUTING PRODUCT OR PROCEDURE FOR CONSIDERATION.

3. ANCHOR BOLT BLOCKOUTS SHALL CONSIST OF 4" DIA. CORRUGATED PLASTIC DUCT.

DO NOT USE DUCTS MANUFACTURED FROM RECYCLED MATERIAL. USE SEAMLESS FABRICATION METHODS TO MANUFACTURE DUCTS.

USE CORRUGATED DUCT MANUFACTURED FROM NON-COLORED, UNFILLED POLYPROPYLENE MEETING THE REQUIREMENTS OF ASTM D4101 STANDARD SPECIFICATION FOR POLYPROPYLENE PLASTIC INJECTION AND EXTRUSION MATERIALS WITH A CELL CLASSIFICATION RANGE OF PP0340B44541 TO PP0340B67884. THE DUCT WILL BE WHITE IN COLOR CONTAINING ANTIOXIDANT(S) WITH A MINIMUM OXIDATION INDUCTION TIME (OIT) ACCORDING TO ASTM D 3895 OF 20 MINUTES AND CONTAINING A NON-YELLOWING LIGHT STABILIZER. PERFORM OIT TEST ON SAMPLES FROM THE FINISHED PRODUCT. FURNISH DUCT WITH A MINIMUM THICKNESS OF 0.12".

4. ALL FREE WATER SHALL BE REMOVED FROM ANCHOR ROD BLOCKOUTS BY AN AIR JET OR BY VACCUUM BEFORE PLACING GROUT. GROUT SHALL BE POURED INTO THE ANCHOR BLOCKOUT IN SUFFICIENT QUANTITY TO COMPLETELY FILL THE HOLE WHEN THE ANCHOR ROD IS INSERTED. THE ANCHOR ROD SHALL BE INSERTED IN THE LIQUID GROUT AND AGITATED TO COMPLETELY WET THE PERIMETER OF THE ROD AND TO COMPLETELY FILL THE ANNULAR SPACE AROUND THE ROD. A SMALL AMOUNT OF GROUT MAY BE ADDED IF THE ANNULAR SPACE IS NOT FILLED FLUSH WITH THE SURROUNDING SURFACE. GROUTED ANCHOR RODS SHALL NOT BE DISTURBED FOR AT LEAST 12 HOURS AFTER INSTALLATION.

ITEM 507 - STEEL PILE POINTS, AS PER PLAN

USE CONICAL PILE POINTS TO PROTECT THE TIP OF THE 30-INCH DIA. EB PIER 1 PILES. FURNISH CONICAL PILE POINTS FROM THE FOLLOWING MANUFACTURES/SUPPLIERS, OR APPROVED EQUAL:
ASSOCIATED PILE AND FITTING CORPORATION - MODEL VB9
DOUGHERTY FOUNDATION PRODUCTS - MODEL P-77

NO.	DATE	DESCRIPTION
0	2019-06-20	RFC

ISSUE RECORD

DESIGN AGENCY
Michael Baker INTERNATIONAL
1111 SUPERIOR AVE E., SUITE 2300, CLEVELAND, OH 44114

DESIGNED	DRAWN	REVIEWED	DATE
GMC	GMC	JWB	3/15/19
CHECKED	REVISED	STRUCTURE FILE NUMBER	
KAG		1801518	

RECORD PLANS

GENERAL NOTES (2 OF 3)
CUY-010-1978R/CUY-010-1976L
OH-10 EASTBOUND/WESTBOUND OVER GCRTA BLUE AND GREEN LINES

RECORD PLANS

CUY-IR490/SR010-2.09/19.28
PID No. 96833

BU-19 - GCRTA BLUE/GREEN BRIDGES & CATENARY MODIFICATIONS
...\BU-19\010_1978R_SN401.dgn 6/27/2019 4:51:38 PM Christopher.Lemley

OH-10 EASTBOUND
PILE DESIGN LOADS (ULTIMATE BEARING VALUE)

PILE DESIGN LOADS (ULTIMATE BEARING VALUE):
THE ULTIMATE BEARING VALUE IS:
250 KIPS PER PILE FOR THE REAR ABUTMENT PILES
1030 KIPS PER PILE FOR THE PIER 1 PILES
244 KIPS PER PILE FOR THE PIER 2 PILES
230 KIPS PER PILE FOR THE FORWARD ABUTMENT PILES

REAR ABUTMENT PILES:
14 - 16" DIA. PILES 80 FEET LONG, ORDER LENGTH
1 DYNAMIC LOAD TESTING ITEM

PIER 1 PILES:
10 - 30" DIA. PILES 115 FEET LONG, ORDER LENGTH
10 DYNAMIC LOAD TESTING ITEMS
10 RESTRIKE TESTING ITEMS

PIER 2 PILES:
48 - 16" DIA. PILES 55 FEET LONG, ORDER LENGTH
1 DYNAMIC LOAD TESTING ITEM

FORWARD ABUTMENT PILES:
17 - 16" DIA. PILES 75 FEET LONG, ORDER LENGTH
1 DYNAMIC LOAD TESTING ITEM

ALL 16" DIA. CIP PILE CASINGS SHALL BE ⅜" THICK.

OH-10 WESTBOUND
PILE DESIGN LOADS (ULTIMATE BEARING VALUE)

PILE DESIGN LOADS (ULTIMATE BEARING VALUE):
THE ULTIMATE BEARING VALUE IS:
246 KIPS PER PILE FOR THE REAR ABUTMENT PILES
437 KIPS PER PILE FOR THE PIER 1 PILES
289 KIPS PER PILE FOR THE PIER 2 PILES
204 KIPS PER PILE FOR THE FORWARD ABUTMENT PILES

REAR ABUTMENT PILES:
10 - 16" DIA. PILES 65 FEET LONG, ORDER LENGTH
1 DYNAMIC LOAD TESTING ITEM

PIER 1 PILES:
24 - 16" DIA. PILES 95 FEET LONG, ORDER LENGTH
1 DYNAMIC LOAD TESTING ITEM

PIER 2 PILES:
36 - 16" DIA. PILES 65 FEET LONG, ORDER LENGTH
1 DYNAMIC LOAD TESTING ITEM

FORWARD ABUTMENT PILES:
12 - 16" DIA. PILES 55 FEET LONG, ORDER LENGTH
1 DYNAMIC LOAD TESTING ITEM

ALL CIP PILE CASINGS SHALL BE ⅜" THICK.

PILE DRIVING CONSTAINTS:

PRIOR TO DRIVING ABUTMENT PILES TO THE UTIMATE BEARING VALUE (UBV), CONSTRUCT THE MSE WALL AND THE BRIDGE APPROACH EMBANKMENT BEHIND THE ABUTMENT UP TO THE BOTTOM OF THE FOOTING FOR A MINIMUM DISTANCE OF 75 FEET BEHIND EACH ABUTMENT. THE CONTRACTOR MAY PRE-DRIVE ABUTMENT PILES BEFORE CONSTRUCTING MSE WALLS. PRE-DRIVING CONSISTS OF INSTALLING THE ABUTMENT PILES INTO THE SOIL ONLY AS FAR AS NECESSARY SO THAT THE PILE WILL REMAIN VERTICAL DURING MSE WALL CONSTRUCTION. IF PRE-DRIVING PILES, INSTALL PILE SLEEVES AROUND PILES BEFORE CONSTRUCTING THE MSE WALL. AT LEAST THREE FEET OF PILE MUST EXTEND ABOVE THE TOP OF THE PILE SLEEVE TO MEET THE REQUIREMENTS OF CMS 507.09 REGARDING SPLICES. DO NOT DRIVE ABUTMENT PILES TO THE UBV OR TO REFUSAL ON BEDROCK UNTIL AFTER THE ABOVE REQUIRED MSE WALL AND EMBANKMENT HAVE BEEN CONSTRUCTED AND A 50 CALENDAR DAY WAITING PERIOD HAS ELAPSED.

THE ENGINEER MAY ADJUST THE LENGTH OF THE WAITING PERIOD BASED ON SETTLEMENT PLATFORM READINGS. AFTER THE SPECIFIED WAITING PERIOD HAS ELAPSED, DRIVE ABUTMENT PILES TO THE UBV OR TO REFUSAL ON BEDROCK. IN ORDER TO REMOVE ANY NEGATIVE SKIN FRICTION THAT HAS DEVELOPED DURING THE WAITING PERIOD, DRIVE EACH ABUTMENT PILE A DISTANCE OF AT LEAST 0.5 INCH.

IF NOT PRE-DRIVING ABUTMENT PILES, INSTALL THE ABUTMENT PILES THROUGH PILE SLEEVES AFTER THE ABOVE REQUIRED MSE WALL AND EMBANKMENT HAVE BEEN CONSTRUCTED AND THE SPECIFIED WAITING PERIOD HAS ELAPSED.

PILE DRIVING CONSTAINTS:

- EXCAVATE TO THE ELEVATION OF THE MSE WALL LEVELING PAD.
- GRANULAR MATERIAL, TYPE C MAY BE INSTALLED PRIOR TO PILE DRIVING. IF SO, IT SHALL BE REGRADED PRIOR TO CONTRETE LEVELING PAD COSNTRUCTION.
- DRIVE ABUTMENT PILES TO PLAN LENGTH OR UBV (WHICHEVER COMES FIRST).
- PLACE CONCRETE LEVELING PAD.
- INSTALL MSE WALL UP TO THE BOTTOM OF FOOTING. WHERE APPLICABLE, EMBANKMENT SHALL BE CONSTRUCTED AS MSE WALL CONSTRUCTION PROGRESSES.
- RESTRIKE PILE AFTER WAITING PERIOD. EACH PILE SHALL BE DRIVEN TO UBV, OR AN ADDITIONAL 1/2" IF THEY PREVIOUSLY ACHIEVED UBV.

APPLICABLE ODOT CMS SPECIFICATIONS:

THE FOLLOWING WORK ITEMS SHALL BE CONSTRUCTED PER THE CMS ITEMS LISTED IN THE TABLE BELOW.

ITEM NO.	ITEM DESCRIPTION
203	EMBANKMENT, AS PER PLAN
503	COFFERDAMS AND EXCAVATION BRACING
503	UNCLASSIFIED EXCAVATION, AS PER PLAN
505	PILE DRIVING EQUIPMENT MOBILIZATION
507	16" CAST-IN-PLACE REINFORCED CONCRETE PILES, FURNISHED
507	16" CAST-IN-PLACE REINFORCED CONCRETE PILES, DRIVEN
507	30" CAST-IN-PLACE REINFORCED CONCRETE PILES, FURNISHED
507	30" CAST-IN-PLACE REINFORCED CONCRETE PILES, DRIVEN
507	PREBORED HOLES
509	EPOXY COATED REINFORCING STEEL
511	CLASS QC1 CONCRETE WITH QC/QA, FOOTING
511	CLASS QC1 CONCRETE WITH QC/QA, ABUTMENT INCLUDING FOOTING
511	CLASS QC1 CONCRETE WITH QC/QA, PIER ABOVE FOOTING
511	CLASS QC2 CONCRETE WITH QC/QA, BRIDGE DECK
511	CLASS QC2 CONCRETE WITH QC/QA, BRIDGE DECK (PARAPET), AS PER PLAN
511	CLASS QC2 CONCRETE WITH QC/QA, SIDEWALK
511	CLASS QC2 CONCRETE, MISC.: PYLONS WITH QC/QA
511	CLASS QC3 CONCRETE WITH QC/QA, SUBSTRUCTURE (EB PIER 1 CAP)
512	SEALING OF CONCRETE SURFACES (NON-EPOXY)
512	SEALING OF CONCRETE SURFACES (EPOXY-URETHANE)
512	SEALING OF CONCRETE SURFACES, AS PER PLAN
513	STRUCTURAL STEEL MEMBERS, LEVEL 4
513	WELDED STUD SHEAR CONNECTORS
514	FIELD PAINTING STRUCTURAL STEEL, INTERMEDIATE COAT, AS PER PLAN
514	FIELD PAINTING STRUCTURAL STEEL, FINISH COAT, AS PER PLAN
514	FINAL INSPECTION REPAIR
516	STRUCTURAL EXPANSION JOINT INCLUDING ELASTOMERIC STRIP SEAL
516	ELASTOMERIC BEARING WITH INTERNAL LAMINATES AND LOAD PLATE (NEOPRENE)
518	6" PERFORATED PIPE, INCLUDING SPECIALS
518	6" NON-PERFORATED PIPE, INCLUDING SPECIALS
518	STRUCTURE DRAINAGE, MISC.: PREFABRICATED GEOCOMPOSITE DRAIN
518	POROUS BACKFILL WITH GEOTEXTILE FABRIC
523	DYNAMIC LOAD TESTING
523	RESTRIKE
526	REINFORCED CONCRETE APPROACH SLABS (T=17")

ITEM NO.	ITEM DESCRIPTION
526	TYPE C INSTALLATION
530	SPECIAL - SUPERSTRUCTURE: UTILITY SUPPORTS
530	SPECIAL - SUBSTRUCTURE ABUTMENT REINFORCING STRAP
601	CRUSHED AGGREGATE SLOPE PROTECTION
601	CONCRETE SLOPE PROTECTION
607	VANDAL PROTECTION FENCE, AS PER PLAN
625	CONDUIT, MISC.: 5" ELECTRICAL CONDUITS
625	CONDUIT, MISC.: 2" CONDUIT IN PARAPET
625	CONDUIT, MISC.: 1" CONDUIT IN PARAPET
625	STRUCTURE GROUNDING SYSTEM
625	JUNCTION BOX

ITEM 518 STRUCTURE DRAINAGE, MISC.: PREFABRICATED GEOCOMPOSITE DRAIN

THIS WORK CONSISTS OF FURNISHING AND PLACING PREFABRICATED GEOCOMPOSITE DRAIN (PGD) AGAINST THE CONCRETE SURFACE OF AN ABUTMENT OR RETAINING WALL.

FURNISH PGD CONSISTING OF A DRAINAGE CORE WITH A GEOTEXTILE FABRIC BONDED TO AT LEAST ONE SIDE. USE CORE MATERIAL THAT CONSISTS OF A STABLE, POLYMER PLASTIC MATERIAL WITH A CUSPATED OR GEONET STRUCTURE. THE CORE MATERIAL SHALL HAVE SUFFICIENT FLEXIBILITY TO WITHSTAND BENDING AND HANDLING DURING INSTALLATION WITHOUT DAMAGE. FURNISH GEOTEXTILE COMPOSED OF STRONG ROT-PROOF POLYMERIC FIBERS FORMED INTO A WOVEN OR NON-WOVEN FABRIC. FURNISH PGD CONFORMING TO THE FOLLOWING REQUIREMENTS. FURNISH MANUFACTURER'S CERTIFIED TEST DATA.

	PROPERTY	TEST METHOD	VALUE
CORE	THICKNESS	ASTM D 5199	0.4 TO 1.0 INCH
	COMPRESSIVE STRENGTH	ASTM D 1621	13,650 PSF MIN.
	FLOW RATE	ASTM D 4716	9 TO 25 GPM/FT
FABRIC	APPARENT OPENING SIZE	ASTM D 4751	0.3 MM MAX.
	FLOW RATE	ASTM D 4491	40 GPM/SQ.FT. MIN.
	GRAB TENSILE STRENGTH	ASTM D 4632	90 LBS MIN.
	CBR PUNCTURE	ASTM D 6241	65 LBS MIN.

PLACE PGD ON THE CONCRETE SURFACE WITH THE GEOTEXTILE FABRIC SIDE FACING OUT. SECURE THE PGD TO THE CONCRETE SURFACE USING CONSTRUCTION ADHESIVE OR CONCRETE NAILS WITH WASHERS AT LEAST 1-INCH DIAMETER IN SIZE. SECURE THE PGD ALONG THE EDGES AND AT A MAXIMUM SPACING OF 4 FEET.

SPLICE ABUTTING SECTIONS TOGETHER BY OVERLAPPING THE GEOTEXTILE FLAP (IF PROVIDED) ON ONE SECTION WITH THE ADJACENT SECTION OF PGD. OVERLAP THE GEOTEXTILE IN A SHINGLED OVERLAP SO THAT THE UPPER GEOTEXTILE IS ON TOP OF THE LOWER GEOTEXTILE. IF A GEOTEXTILE FLAP IS NOT PROVIDED, COVER THE SEAM WITH A 12-INCH WIDE STRIP OF GEOTEXTILE FABRIC CENTERED OVER THE SEAM AND SECURED IN PLACE USING 3-INCH WIDE WATERPROOF PLASTIC TAPE.

SEAL ALL EXPOSED EDGES OF THE CORE MATERIAL TO PREVENT SOIL INSTRUSION. SEAL EXPOSED EDGES BY FOLDING THE GEOTEXTILE FLAPS OVER AND AROUND THE PGD OR, IF A FLAP IS NOT PROVIDED, COVERING THE EXPOSED EDGE WITH A 12-INCH WIDE STRIP OF GEOTEXTILE FABRIC, TAPING THE STRIP TO THE PGD GEOTEXTILE 8 INCHES FROM THE EXPOSED EDGE, AND FOLDING THE REMAINING 4 INCHES OVER AND AROUND THE PGD. SECURE LOOSE EDGES OF THE GEOTEXTILE FABRIC WITH 3-INCH WIDE WATERPROOF PLASTIC TAPE.

REPAIR ANY DAMAGE TO THE GEOTEXTILE FABRIC BY COVERING WITH A PATCH WHICH OVERLAPS THE DAMAGED AREA AND EXTENDS AT LEAST 6 INCHES BEYOND THE EDGE OF THE DAMAGED AREA. TAPE THE EDGES OF THE PATCH IN PLACE USING 3-INCH WIDE WATERPROOF PLASTIC TAPE. IF THE CORE OF THE PGD IS DAMAGED, REPLACE IT WITH A NEW SECTION OF PGD AND SPLICE IT AS DESCRIBED ABOVE.

WHERE SHOWN ON THE PLANS, PLACE THE BOTTOM OF THE PGD ADJACENT TO A PERFORATED DRAINAGE COLLECTION PIPE AND POROUS BACKFILL AND COVER WITH GEOTEXTILE FABRIC. ENSURE A CONTINUOUS DRAINAGE PATH FROM THE PGD CORE TO THE PIPE. WHERE A WALL HAS WEEPHOLES FOR DRAINAGE, ENSURE WATER CAN DRAIN FROM THE PGD TO THE WEEPHOLE. IF NECESSARY, CUT A HOLE IN THE CORE TO ALLOW DRAINAGE OR USE A WEEPHOLE FITTING FROM THE PGD MANUFACTURER. DO NOT CUT GEOTEXTILE.

NO.	DATE	DESCRIPTION
1	2024-09-10	RECORD DRAWINGS
0	2019-06-20	RFC

ISSUE RECORD

DESIGN AGENCY
Michael Baker INTERNATIONAL
1111 SUPERIOR AVE E., SUITE 2300, CLEVELAND, OH 44114

DESIGNED	DRAWN	REVIEWED	DATE
GMC	GMC	JWB	3/15/19
CHECKED	REVISED	STRUCTURE FILE NUMBER	
KAG		1801518	

RECORD PLANS

GENERAL NOTES (3 OF 3)
CUY-010-1978R/CUY-010-1976L
OH-10 EASTBOUND/WESTBOUND OVER GCRTA BLUE AND GREEN LINES

CUY-IR490/SR010-2.09/19.28
PID No. 96833

RECORD PLANS

3/3

5/110

NO.	DATE	DESCRIPTION
3	2021-05-18	DC056
2	2020-09-09	DC046
1	2020-06-08	DC040
0	2019-06-20	RFC

ISSUE RECORD

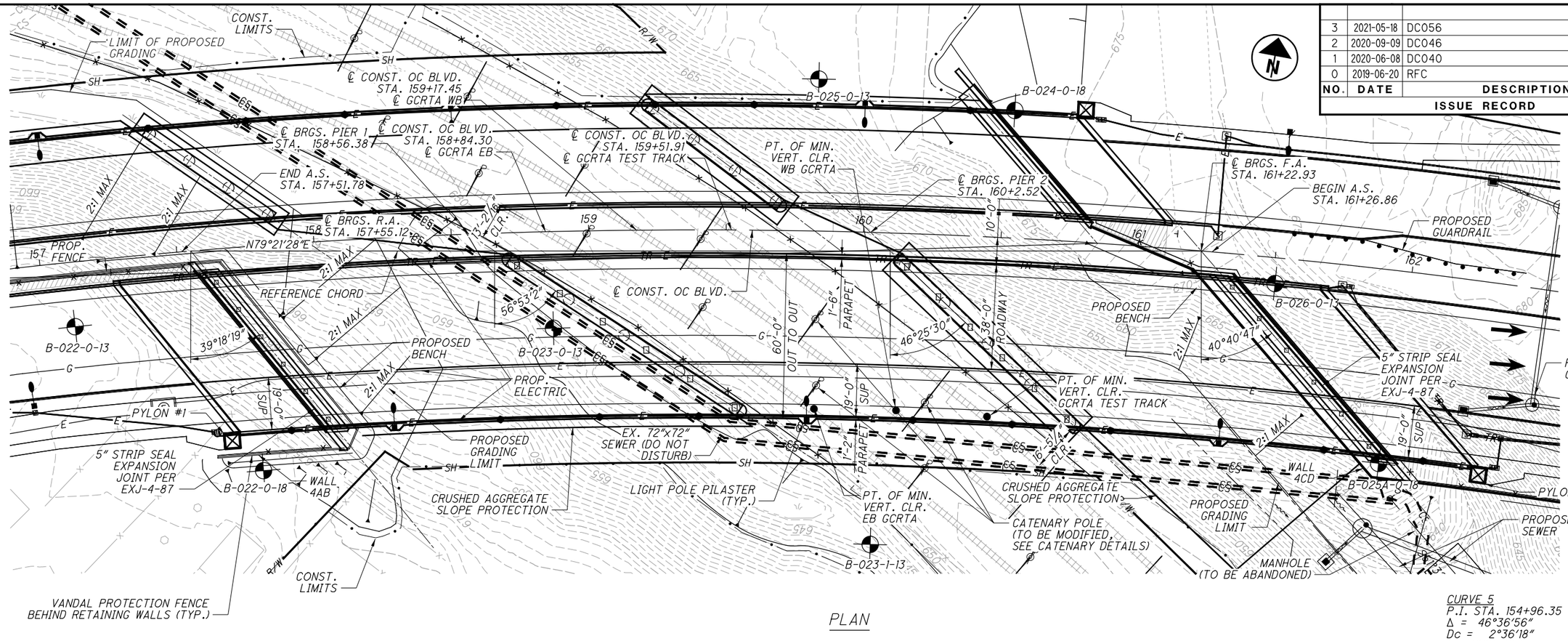

PLAN

CURVE 5
P.I. STA. 154+96.35
Δ = 46°36'56"
Dc = 2°36'18"
R = 2200.00'
T = 947.83'
L = 1789.91'
E = 195.49'

NOTE: SEE SHEET 2 OF 50 FOR BENCHMARKS, LEGEND, PROPOSED STRUCTURE BLOCK, AND ADDITIONAL NOTES.

● POINTS OF MINIMUM VERTICAL CLEARANCE

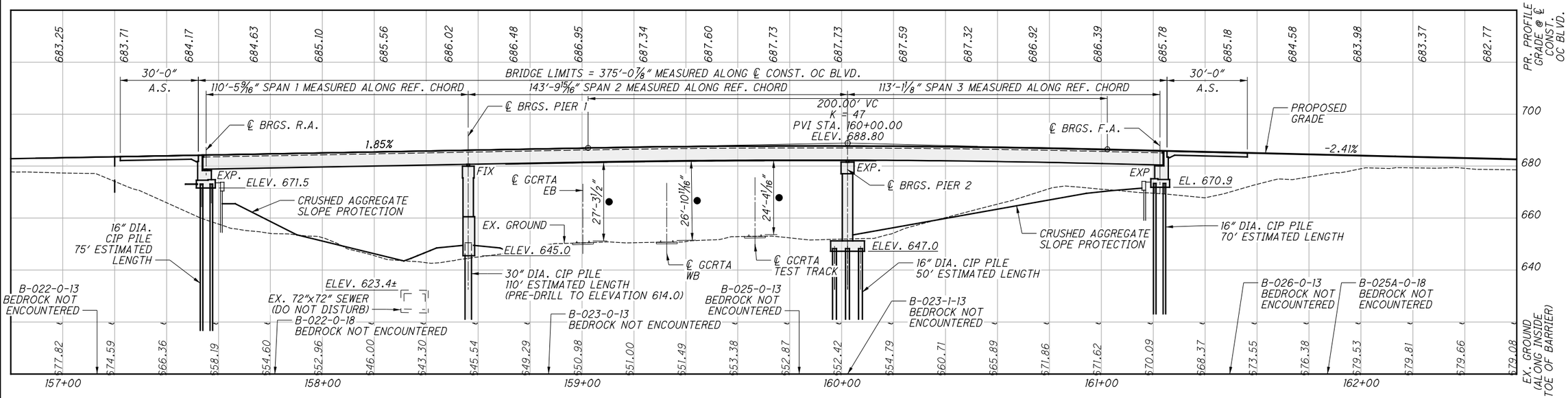

PROFILE

(SEE GRADING PLANS IN BU-15 FOR ADDITIONAL INFORMATION.)

DESIGN AGENCY
Michael Baker INTERNATIONAL
1111 SUPERIOR AVE E., SUITE 2300, CLEVELAND, OH 44114

DESIGNED	DRAWN	REVIEWED	DATE
GMC	GMC	JWB	3/01/19
CHECKED	REVISED	STRUCTURE FILE NUMBER	
CDC		1801518	

RECORD PLANS

CUYAHOGA CO.
STA. 157+51.78
STA. 161+26.86

RECORD PLANS

SITE PLAN (1 OF 2)
CUY-010-1978R
OH-10 EASTBOUND OVER GCRTA BLUE AND GREEN LINES

CUY-IR490/SR010-2.09/19.28
PID No. 96833

RECORD PLANS

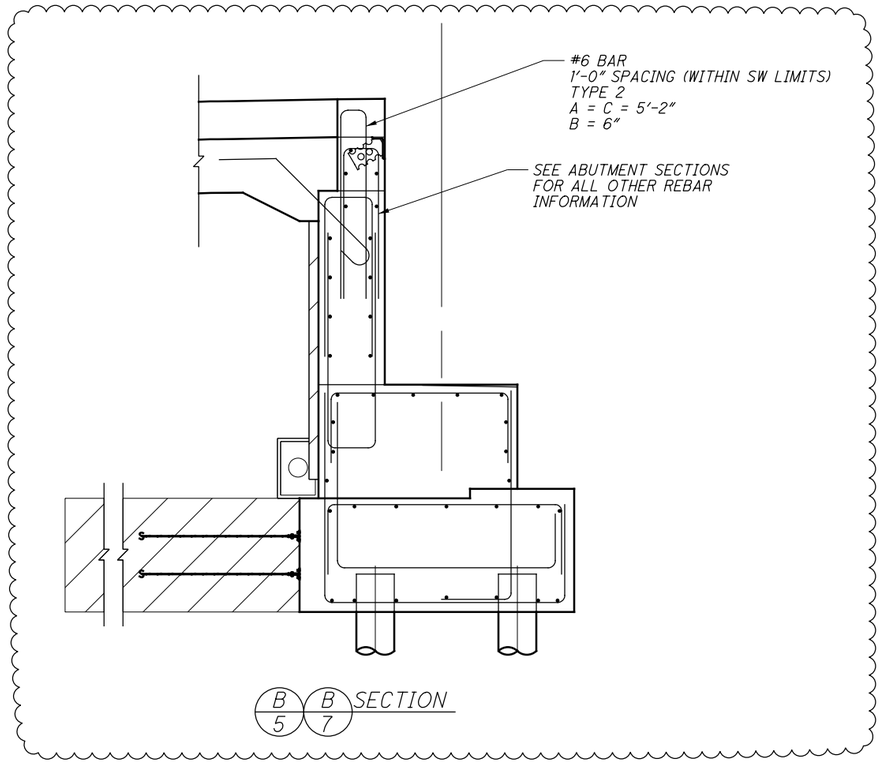

ISSUE RECORD		
NO.	DATE	DESCRIPTION
0	2019-06-20	RFC
1	2024-09-10	RECORD DRAWINGS

BENCHMARK DATA

BM #1 STA. 156+09.77 OC, ELEV. 676.68', OFFSET 203.31 RT,
BM #2 STA. 158+90.59 OC, ELEV. 668.04', OFFSET 266.47 LT

FOR ADDITIONAL BENCHMARK INFORMATION SEE BU-15

NOTES

EARTHWORK LIMITS SHOWN ARE APPROXIMATE. ACTUAL SLOPES SHALL CONFORM TO PLAN CROSS SECTIONS AND GRADING PLANS.

DESIGN TRAFFIC:
2020 ADT = 40,630 2020 ADTT = 2,438
2040 ADT = 40,630 2040 ADTT = 2,438
DIRECTIONAL DISTRIBUTION = 0.50
DESIGN SPEED: 40 MPH

SEE BU-20 FOR WALL 4AB AND WALL 4CD

SEE BU-27 STREET LEVEL LIGHTING FOR ADDITIONAL LIGHTING INFORMATION, INCLUDING PARAPET MOUNTED PULLBOX DETAILS.

MINIMUM VERTICAL CLEARANCE

PT OF MIN. VERTICAL CLEARANCE BETWEEN GCRTA EB AND STRUCTURE AT STA. 159+85.90 64.58 RT

PT OF MIN. VERTICAL CLEARANCE BETWEEN GCRTA WB AND STRUCTURE AT STA. 160+16.87 64.58 RT

PT OF MIN. VERTICAL CLEARANCE BETWEEN GCRTA TEST TRACK AND STRUCTURE AT STA. 160+49.83 64.58 RT

LEGEND

BORING LOCATION

● 17'-0" REQUIRED MINIMUM VERTICAL CLEARANCE (GCRTA)
24.34' ACTUAL MINIMUM VERTICAL CLEARANCE

PROPOSED STRUCTURE

TYPE: THREE-SPAN CONTINUOUS, COMPOSITE WELDED PLATE GIRDER SUPERSTRUCTURE SUPPORTED ON REINFORCED CONCRETE SUBSTRUCTURE

SPANS: 110'-5 9/16", 143'-9 15/16", 113-1 1/8" MEASURED ALONG REFERENCE CHORD

ROADWAY: 38'-0" CURB TO TOE PARAPET, 19'-0" WALK RT. ONLY

LOADING: HL-93 AND 60 PSF FWS

SKEW VARIES: 39°18'19" R.F.@ R.A.; 56°53'02" R.F.@ P1; 46°25'30" R.F.@ P2; 40°40'47" R.F.@ F.A. WITH RESPECT TO REFERENCE CHORD

APPROACH SLABS: AS-1-15 (30'-0" LONG)
TYPE C INSTALLATION PER AS-2-15

ALIGNMENT: CURVED 2° 36' 18" RT.

NORMAL CROWN: 0.02 FT/FT

COORDINATES: LATITUDE 41° 28' 59.76" N
LONGITUDE 81° 38' 27.23" W

DESIGN AGENCY
Michael Baker INTERNATIONAL
1111 SUPERIOR AVE E., SUITE 2300, CLEVELAND, OH 44114

DESIGNED	DRAWN	REVIEWED	DATE
GMC	GMC	JWB	3/01/19
CHECKED	REVISED	STRUCTURE FILE NUMBER	
CDC		1801518	

RECORD PLANS

CUYAHOGA CO.
STA. 157+51.78
STA. 161+26.86

RECORD PLANS

SITE PLAN (2 OF 2)
CUY-010-1978R
OH-10 EASTBOUND OVER GCRTA BLUE AND GREEN LINES

RECORD PLANS

CUY-IR490/SR010-2.09/19.28
PID No. 96833

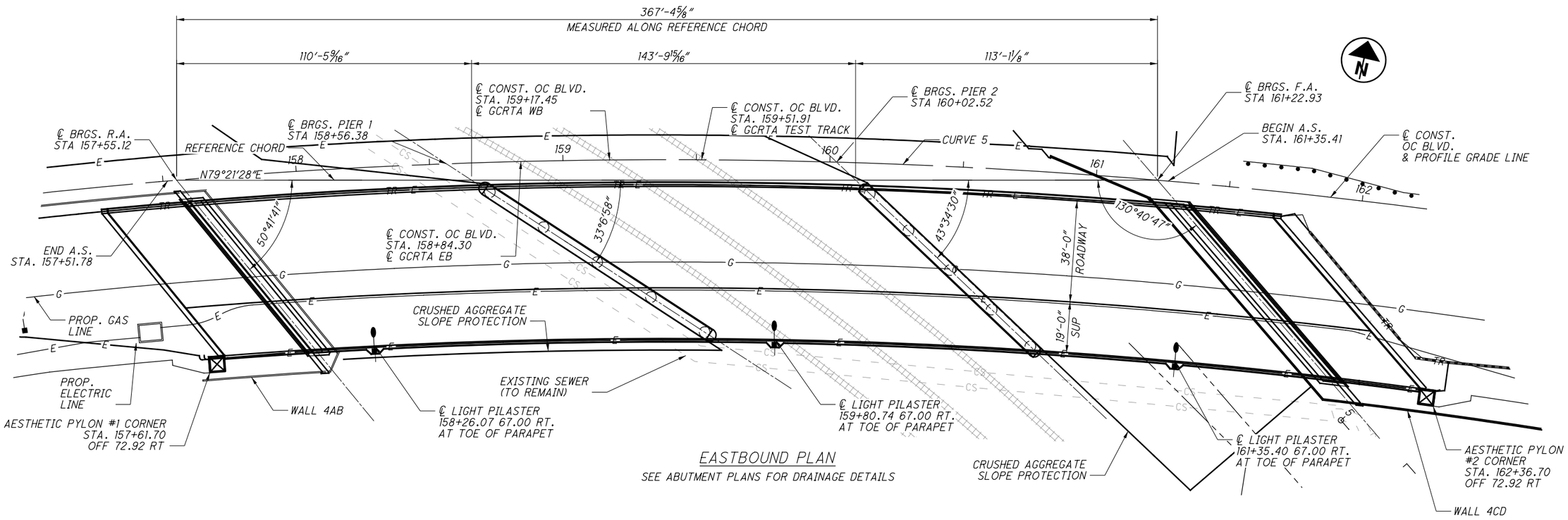

EASTBOUND PLAN

SEE ABUTMENT PLANS FOR DRAINAGE DETAILS

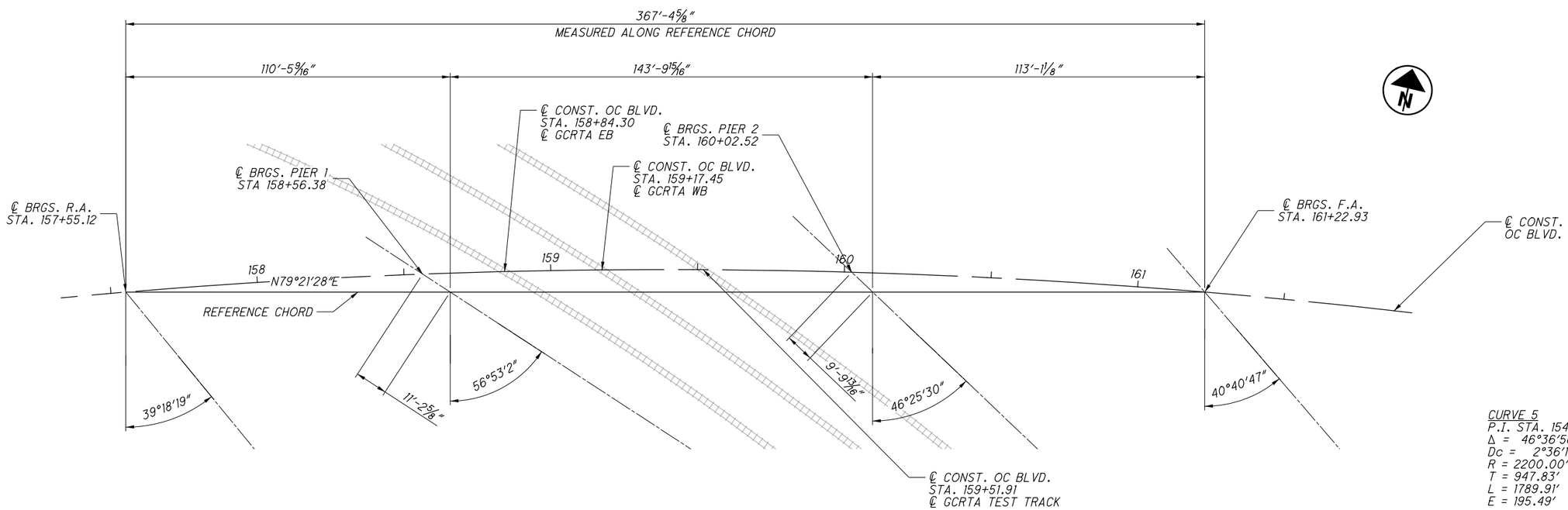

EASTBOUND GEOMETRIC LAYOUT

CURVE 5
P.I. STA. 154+96.35
Δ = 46°36'56"
Dc = 2°36'18"
R = 2200.00'
T = 947.83'
L = 1789.91'
E = 195.49'

NOTES:

1. REFERENCE CHORD IS A STRAIGHT LINE DISTANCE OF 367'-4 5/8" BETWEEN STA. 157+55.12 AND STA. 161+22.93
2. ARC LENGTH = 367'-9 3/4"
3. SKEW ANGLES ARE MEASURED PERPENDICULAR TO THE REFERENCE CHORD.

NO.	DATE	DESCRIPTION
0	2019-06-20	RFC

ISSUE RECORD

DESIGN AGENCY
Michael Baker INTERNATIONAL
1111 SUPERIOR AVE E. SUITE 2300, CLEVELAND, OH 44114

DESIGNED	DRAWN	REVIEWED	DATE
GMC	GMC	JWB	3/01/19
CHECKED	REVISED	STRUCTURE FILE NUMBER	
CDC		1801518	

RECORD PLANS

GENERAL PLAN
CUY-010-1978R
OH-10 EASTBOUND OVER GCRTA BLUE AND GREEN LINES

RECORD PLANS

CUY-IR490/SR010-2.09/19.28
PID No. 96833

RECORD PLANS

BU-19 - GCRTA BLUE/GREEN BRIDGES & CATENARY MODIFICATIONS
...\Sheets\010_1978R_SG401.dgn 5/19/2023 1:41:48 PM Gregory.Hertler

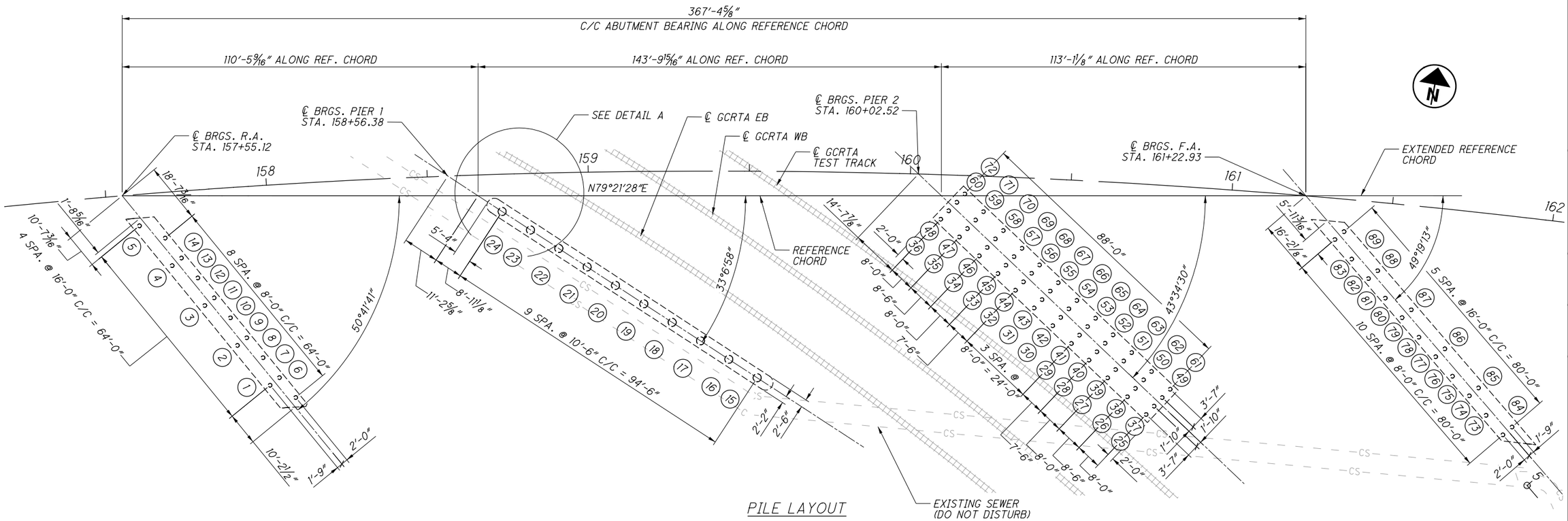

PILE LAYOUT

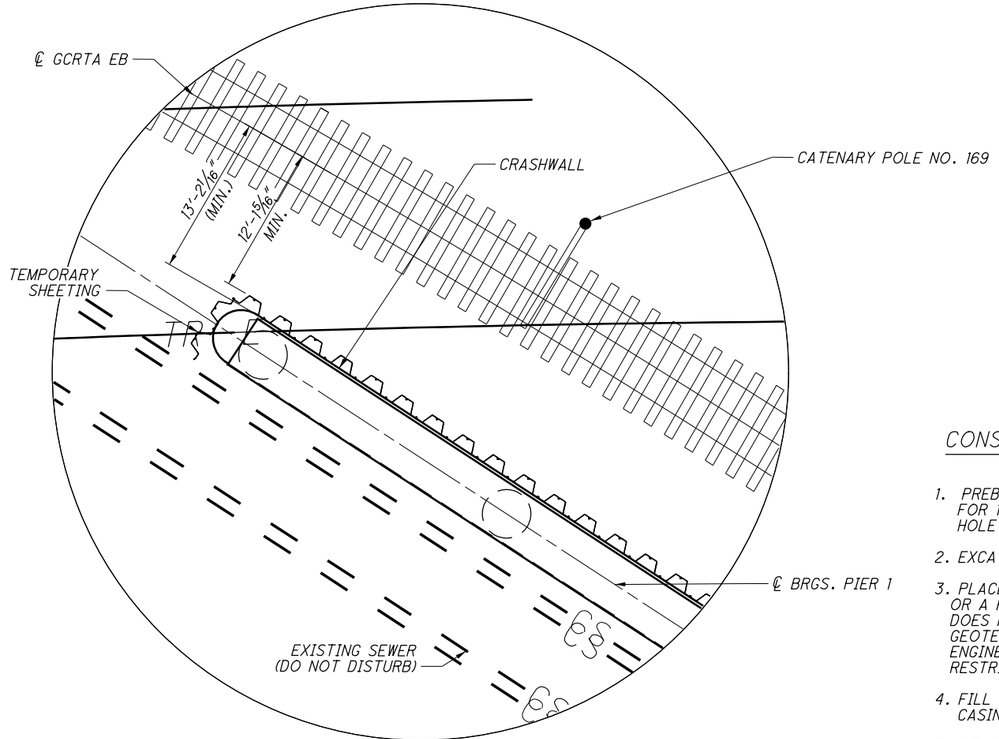

DETAIL A

PILE SCHEDULE			
SUBSTRUCTURE UNIT	PILE DIAMETER	ORDER LENGTH	CUTOFF ELEVATION
REAR ABUTMENT	16"	80'-0"	672.50
PIER 1	30"	115'-0"	650.0
PIER 2	16"	55'-0"	648.00
FORWARD ABUTMENT	16"	75'-0"	671.90

CONSTRUCTION SEQUENCE FOR CASED PILES (16" AND 30")

1. PREBORE TO ELEV. 614. INSTALL CASING PIPES (36" DIA. CASING FOR 30" DIA. PILES, 22" DIA. CASING FOR 16" DIA. PILE) IN PREBORED HOLE. USE VIBRATORY HAMMER TO INSTALL CASING IF PREBORE HOLE DOES NOT STAY OPEN.
2. EXCAVATE SOIL FROM WITHIN THE CASING PIPE.
3. PLACE PILES INSIDE CASINGS AND DRIVE TO REQUIRED DEPTH. DRIVE EB PIER 1 PILES TO UBV OR A PILE TIP ELEVATION OF 536 FT, WHICHEVER COMES FIRST. IF THE DYNAMIC LOAD TESTING DOES NOT INDICATE THE UBV WAS REACHED BY THE END OF INITIAL DRIVE, NOTIFY THE GEOTECHNICAL ENGINEER, WAIT 3 DAYS AND PERFORM A RESTRIKE TEST. THE GEOTECHNICAL ENGINEER MAY ADJUST THE WAITING PERIOD FOR THE RESTRIKE TEST AND REQUIRE ADDITIONAL RESTRIKE TESTS BASED ON THE RESULTS OF THE PILE TESTING.
4. FILL THE VOID BETWEEN CASING AND CAST-IN-PLACE WITH TREMIE GROUT AND REMOVE THE CASING.
5. COMPLETE CONSTRUCTION OF CAST-IN-PLACE PILES.

NOTES

1. PILES 15-24 AND PILE 25 SHALL BE PREBORED AND CASED TO EL. 614.
2. PILE 26, 37, 38, 49, AND 61 SHALL BE PREBORED TO EL. 614.
3. PILE 73,74, AND 84 WERE NOT PREBORED BECAUSE THEY WERE NO LONGER WITHIN 15' OF THE EXISTING SEWER, WHICH WAS RELOCATED.

LEGEND

(#) INDICATES PROPOSED PILE NUMBER

○ INDICATES PROPOSED VERTICAL PILE

NO.	DATE	DESCRIPTION
1	2024-09-10	RECORD DRAWINGS
0	2019-06-20	RFC

ISSUE RECORD

DESIGN AGENCY
Michael Baker INTERNATIONAL
1111 SUPERIOR AVE E., SUITE 2300, CLEVELAND, OH 44114

DESIGNED	DRAWN	REVIEWED	DATE
GMC	GMC	JWB	03/15/19
CHECKED	REVISED	STRUCTURE FILE NUMBER	
CDC		1801518	

RECORD PLANS

FOUNDATION PLAN
CUY-010-1978R
OH-10 EASTBOUND OVER GCRTA BLUE AND GREEN LINES

RECORD PLANS

CUY-IR490/SR010-2.09/19.28
PID No. 96833

RECORD PLANS

4/50

9/110

BU-19 - GCRTA BLUE/GREEN BRIDGES & CATENARY MODIFICATIONS
...\Sheets\010_1978R_S0401.dgn 12/11/2024 5:06:04 PM Rohit.Bk

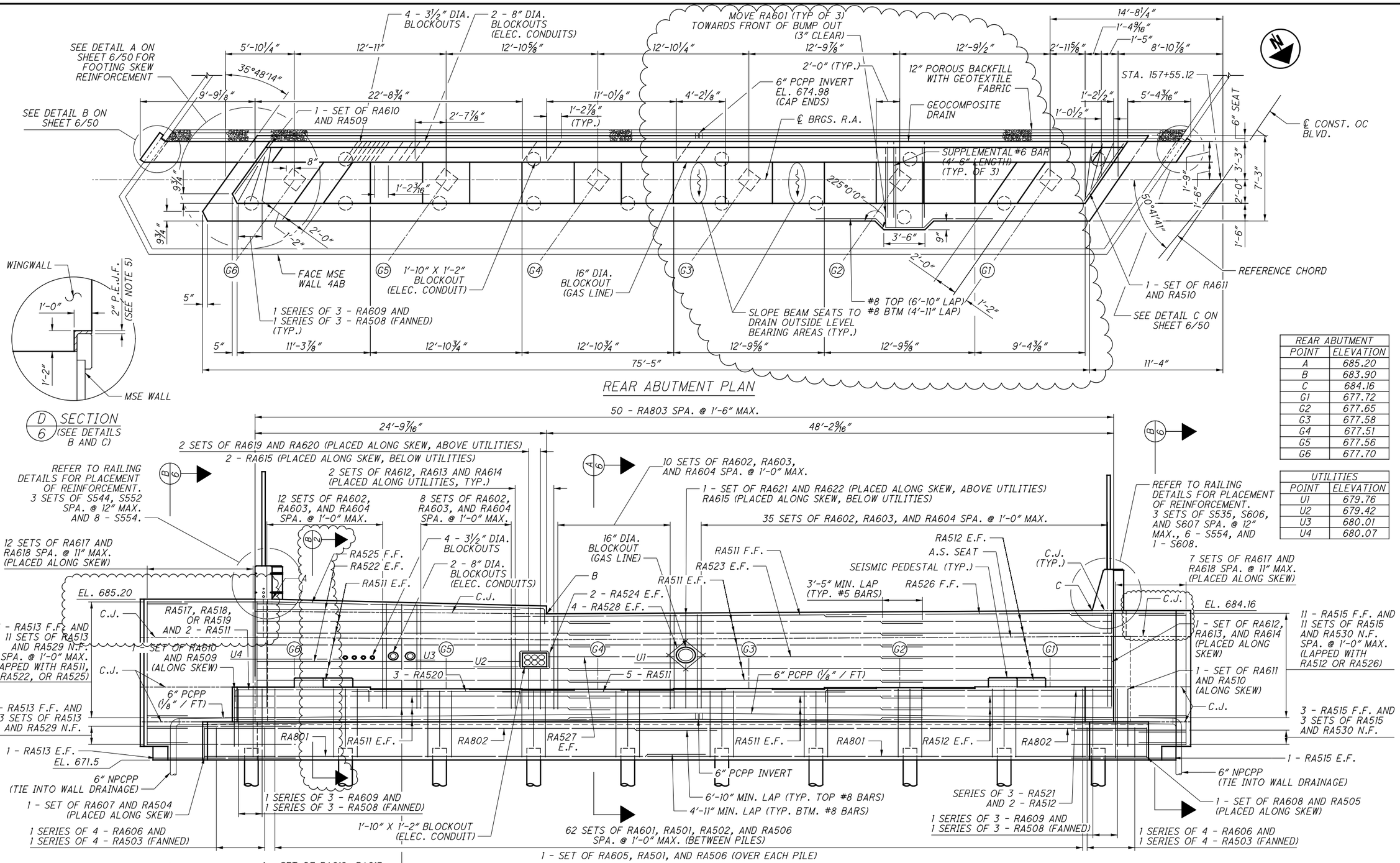

REAR ABUTMENT PLAN

D/6 SECTION (SEE DETAILS B AND C)

REAR ABUTMENT	
POINT	ELEVATION
A	685.20
B	683.90
C	684.16
G1	677.72
G2	677.65
G3	677.58
G4	677.51
G5	677.56
G6	677.70

UTILITIES	
POINT	ELEVATION
U1	679.76
U2	679.42
U3	680.01
U4	680.07

REAR ABUTMENT ELEVATION

NOTES:

1. MSE WALL NOT SHOWN IN ELEVATION VIEW FOR CLARITY.
2. SEE BU-20 FOR WALL 4AB.
3. PCPP SHALL BE CONNECTED TO WALL 4AB DRAINAGE FOR OUTLET.
4. EPOXY COATED REINFORCING STEEL PLACED IN CONFLICT WITH THE INTERACTION BETWEEN THE WINGWALLS AND THE MSE WALL OR THE UTILITIES SHALL BE FIELD CUT.
5. P.E.J.F. SHALL EXTEND THE FULL HEIGHT OF THE MSE WALL/WINGWALL JOINT.

NO.	DATE	DESCRIPTION
2	2024-09-10	RECORD DRAWINGS
1	2021-05-04	DRFI121
0	2019-06-20	RFC

ISSUE RECORD

DESIGN AGENCY
Michael Baker INTERNATIONAL
1111 SUPERIOR AVE E., SUITE 2300, CLEVELAND, OH 44114

DESIGNED	DRAWN	REVIEWED	DATE
SSW	SSW	JWB	3/15/19
CHECKED	REVISED	STRUCTURE FILE NUMBER	
CDC		1801518	

RECORD PLANS

REAR ABUTMENT PLAN AND ELEVATION
CUY-010-1978R
OH-10 EASTBOUND OVER GCRTA BLUE AND GREEN LINES

RECORD PLANS

CUY-IR490/SR010-2.09/19.28
PID No. 96833

BU-19 - GCRTA BLUE/GREEN BRIDGES & CATENARY MODIFICATIONS
...\Sheets\010_1978R_SR401.dgn 9/19/2025 6:05:38 PM Gregory.Hertler

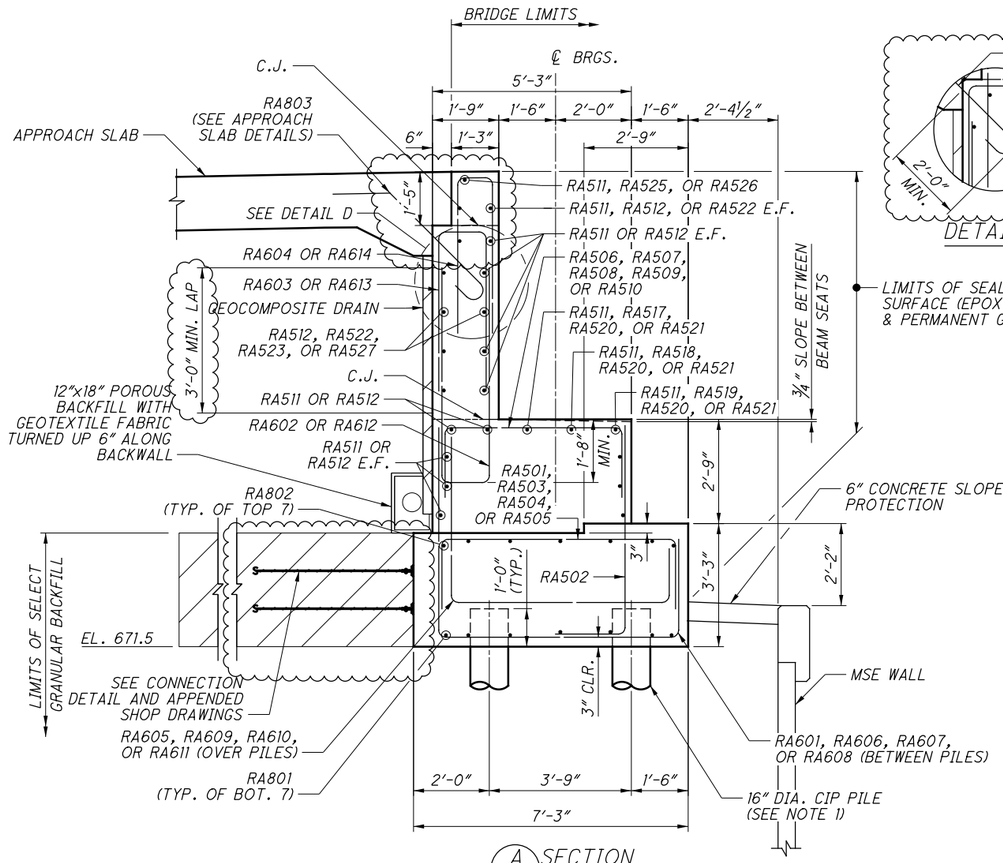

A/5 SECTION

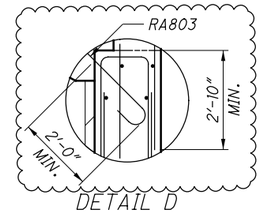

DETAIL D

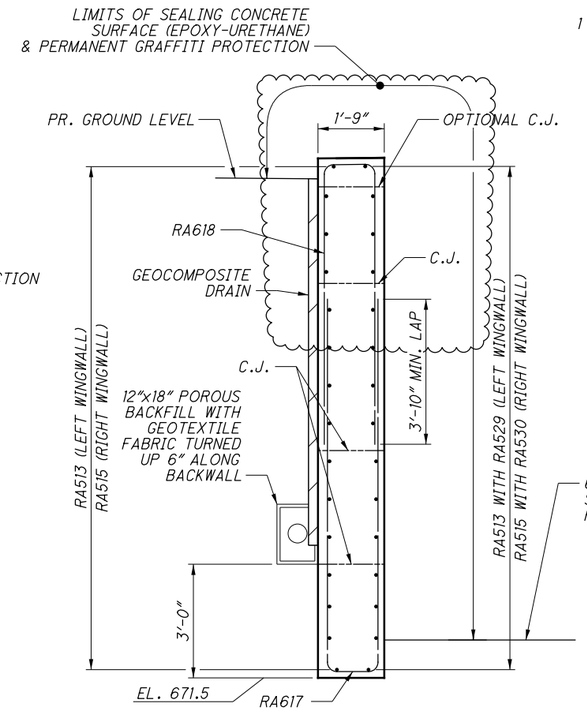

B/5 SECTION

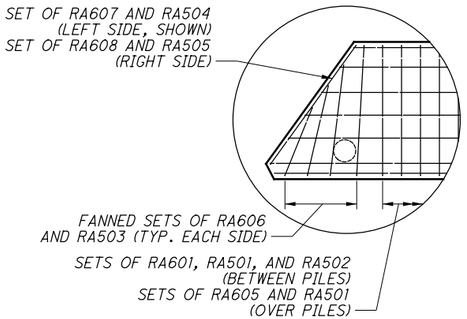

DETAIL A

(LEFT SIDE OF FOOTING SHOWN, MIRROR ON RIGHT SIDE)

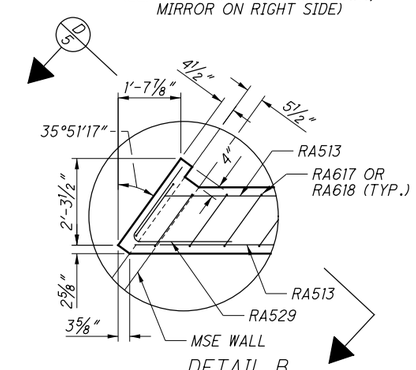

DETAIL B

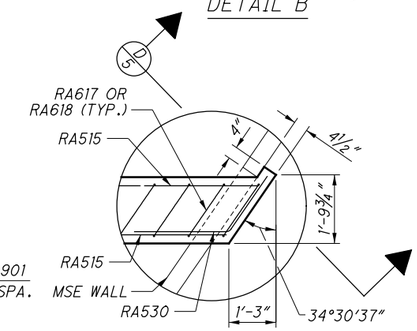

DETAIL C

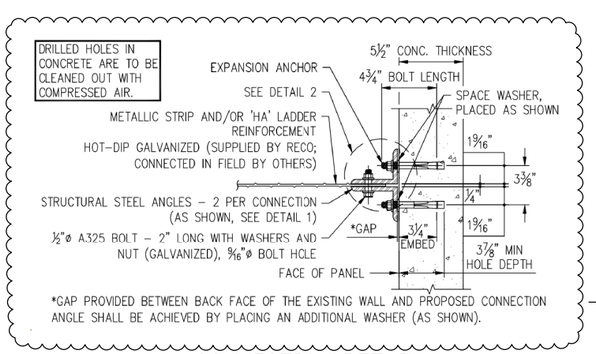

CONNECTION DETAIL

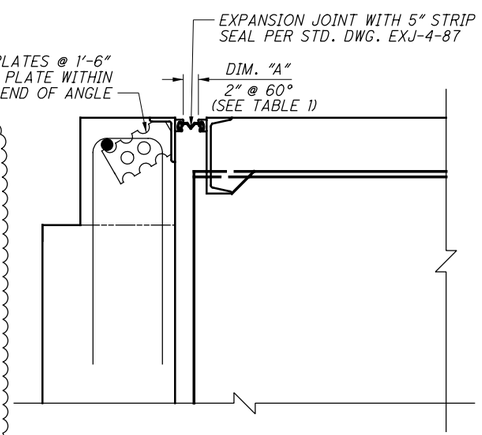

EXPANSION JOINT DETAIL

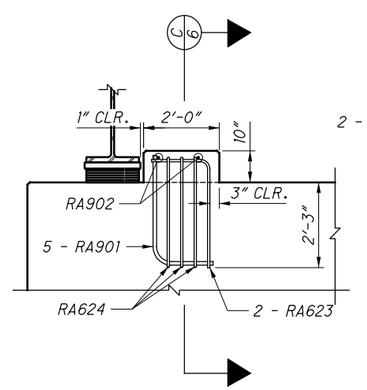

SEISMIC PEDESTAL ELEVATION

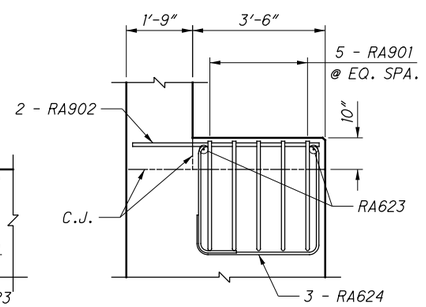

C/6 SECTION

TABLE 1	
REAR ABUTMENT JOINT OPENING TABLE (5" STRIP SEAL)	
TEMPERATURE °F	DIMENSION "A"
30	3"
40	2 7/8"
50	2 5/8"
60	2 1/2"
70	2 3/8"
80	2 1/8"
90	2"

NOTES:

1. YELLOW JACKET SLEEVES (FOUNDATION TECHNOLOGIES, INC., 400 PROGRESS INDUSTRIAL BLVD, LAWRENCEVILLE, GA 30043) WILL BE USED IN PLACE OF STANDARD PIPE SLEEVES. SEE BU-20 FOR ADDITIONAL INFORMATION.

2. THE CONTRACTOR SHALL PROVIDE REINFORCING STRAP ANCHORED TO ABUTMENT THAT PROVIDES 5.72 K/FT (UNFACTORED) RESISTANCE APPLIED PERPENDICULAR TO THE FACE OF THE ABUTMENT AT THE BASE OF CONCRETE FOOTING. REINFORCING STRIPS SHALL MEET REQUIREMENTS OF ODOT SUPPLEMENTAL SPECIFICATION 840. STRAPS SHALL BE METALLIC. CONTRACTOR DESIGN FOR REINFORCING STRAPS SHALL MEET REQUIREMENTS OF SS 840. INCLUDED WITH ITEM 530 - STRUCTURE, MISC.: ABUTMENT REINFORCING STRAP FOR PAYMENT.

3. PROVIDE 2" CONCRETE COVER ON REINFORCEMENT BARS UNLESS NOTED OTHERWISE.

NO.	DATE	DESCRIPTION
1	2024-09-10	RECORD DRAWINGS
0	2019-06-20	RFC

ISSUE RECORD

DESIGN AGENCY
Michael Baker INTERNATIONAL
1111 SUPERIOR AVE E, SUITE 2300, CLEVELAND, OH 44114

DESIGNED	DRAWN	REVIEWED	DATE
SSW	SSW	JWB	3/15/19
CHECKED	REVISED	STRUCTURE FILE NUMBER	
CDC		1801518	

RECORD PLANS

REAR ABUTMENT SECTIONS
CUY-010-1978R
OH-10 EASTBOUND OVER GCRTA BLUE AND GREEN LINES

RECORD PLANS

CUY-IR490/SR010-2.09/19.28
PID No. 96833

RECORD PLANS

6 / 50

11 / 110

BU-19 - GCRTA BLUE/GREEN BRIDGES & CATENARY MODIFICATIONS
...\Sheets\010_1978R_SR402.dgn 9/19/2025 6:05:51 PM Gregory.Hertler

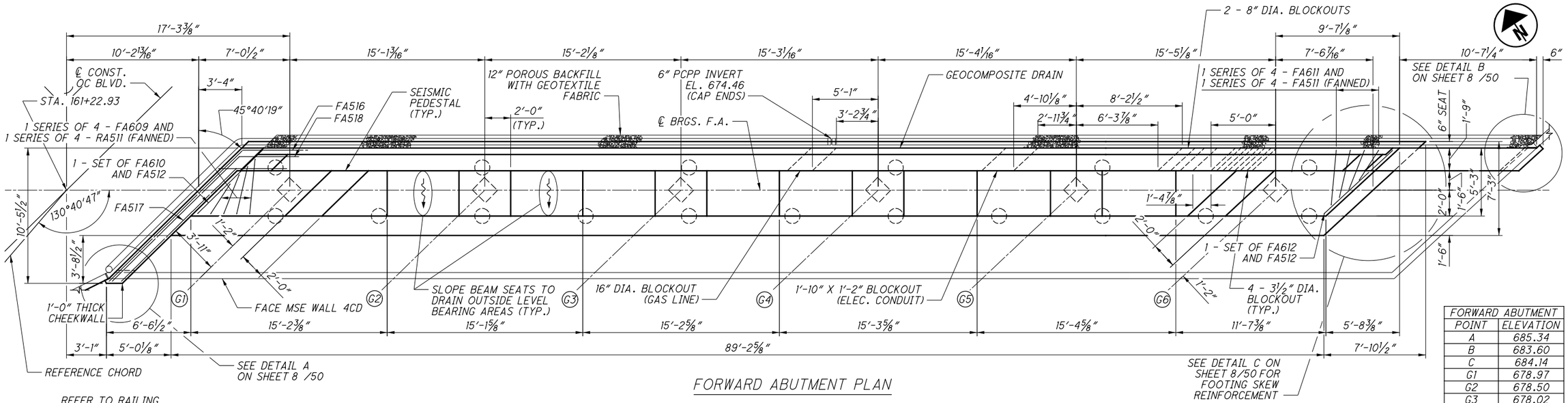

FORWARD ABUTMENT PLAN

FORWARD ABUTMENT	
POINT	ELEVATION
A	685.34
B	683.60
C	684.14
G1	678.97
G2	678.50
G3	678.02
G4	677.54
G5	677.17
G6	676.89

UTILITIES	
POINT	ELEVATION
U1	679.89
U2	679.19
U3	679.26
U4	679.33

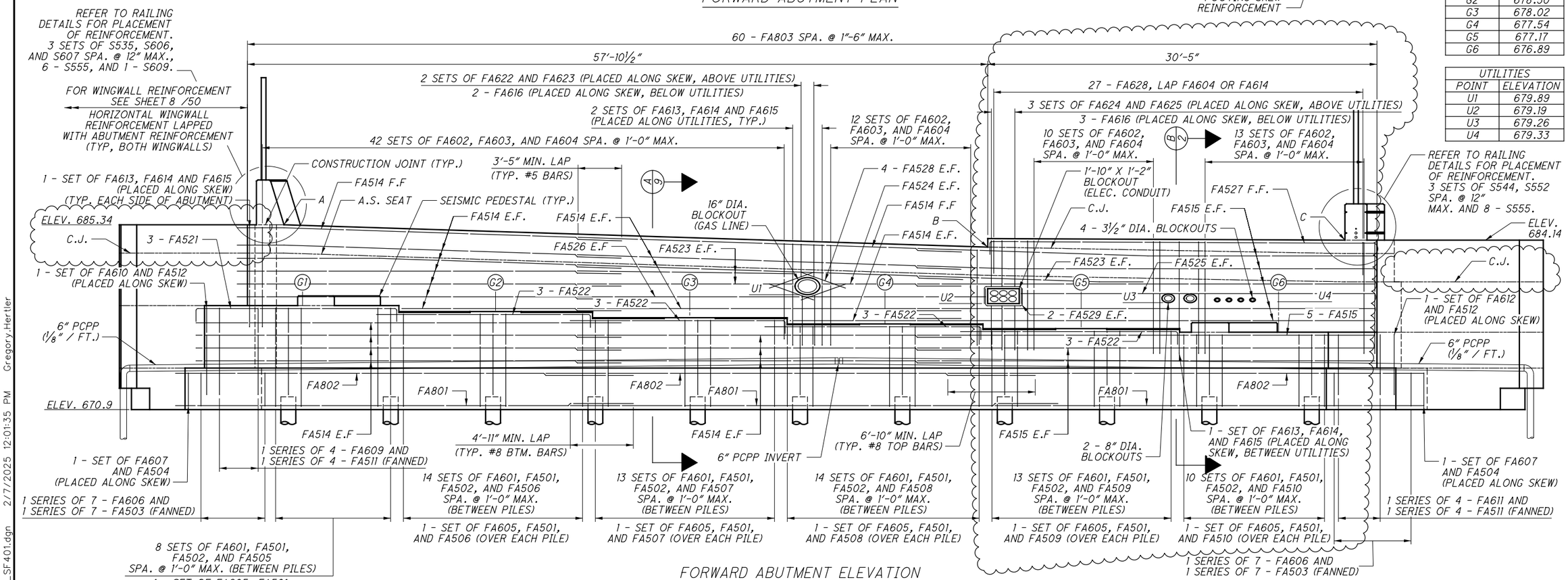

FORWARD ABUTMENT ELEVATION

NOTES:

1. MSE WALLS NOT SHOWN IN ELEVATION VIEW FOR CLARITY.
2. SEE BU-20 FOR WALL 4CD.
3. PCPP SHALL BE CONNECTED TO WALL 4CD DRAINAGE FOR OUTLET.
4. EPOXY COATED REINFORCING STEEL PLACED IN CONFLICT WITH THE INTERACTION BETWEEN THE WINGWALLS AND THE MSE WALL OR THE UTILITIES SHALL BE FIELD CUT.

NO.	DATE	DESCRIPTION
2	2024-09-10	RECORD DRAWINGS
1	2021-05-04	DRFI121
0	2019-06-20	RFC

ISSUE RECORD

DESIGN AGENCY
Michael Baker INTERNATIONAL
1111 SUPERIOR AVE E, SUITE 2300, CLEVELAND, OH 44114

DESIGNED	DRAWN	REVIEWED	DATE
SSW	SSW	JWB	3/15/19
CHECKED	REVISED	STRUCTURE FILE NUMBER	
CDC		1801518	

RECORD PLANS

FORWARD ABUTMENT PLAN AND ELEVATION
CUY-010-1978R
OH-10 EASTBOUND OVER GCRTA BLUE AND GREEN LINES

RECORD PLANS

CUY-IR490/SR010-2.09/19.28
PID No. 96833

RECORD PLANS

BU-19 - GCRTA BLUE/GREEN BRIDGES & CATENARY MODIFICATIONS
...\Sheets\010_1978R_SF401.dgn 2/7/2025 12:01:35 PM Gregory.Hertler

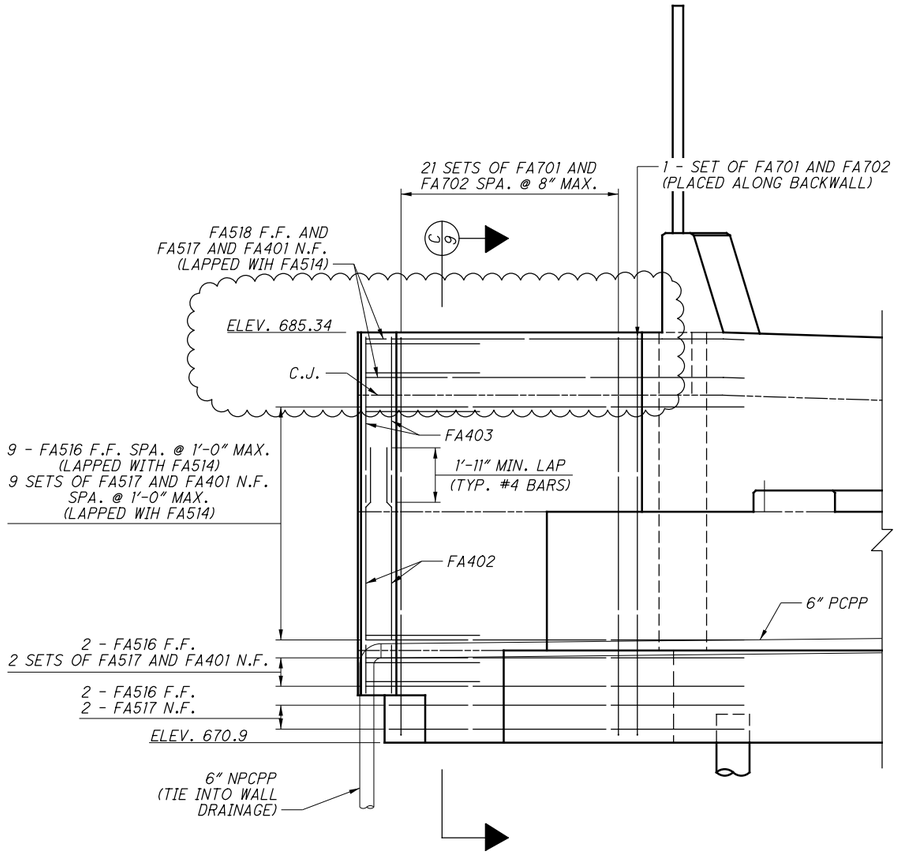

CHEEKWALL ELEVATION

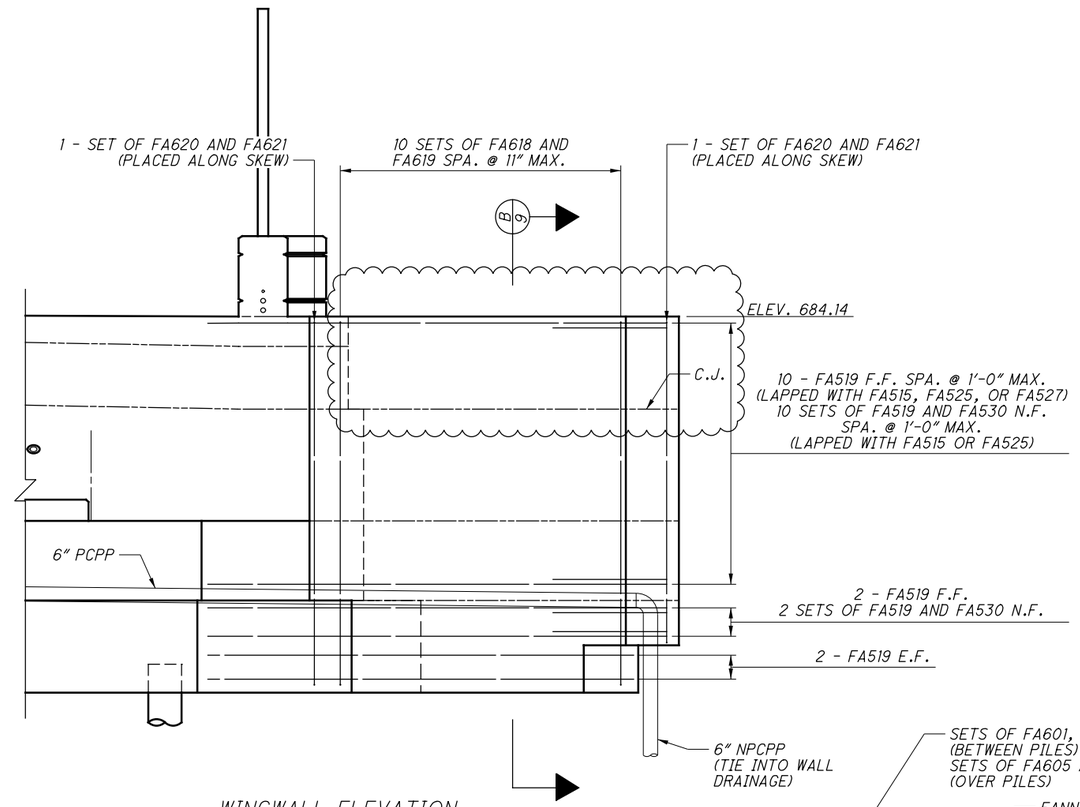

WINGWALL ELEVATION

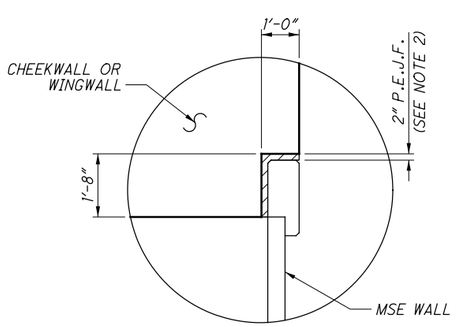

E/8 SECTION (SEE DETAILS B AND C)

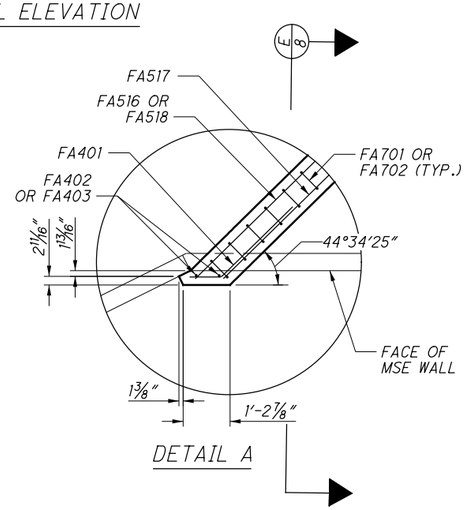

DETAIL A

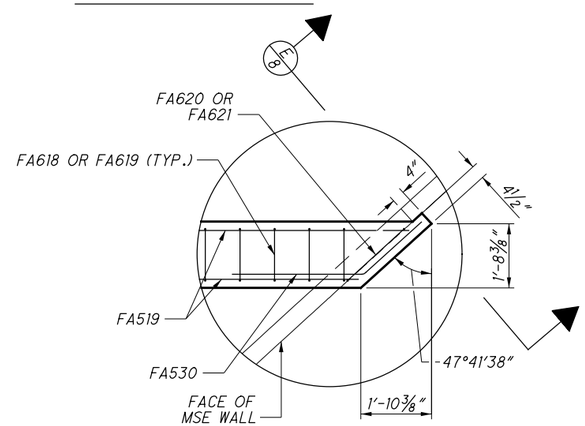

DETAIL B

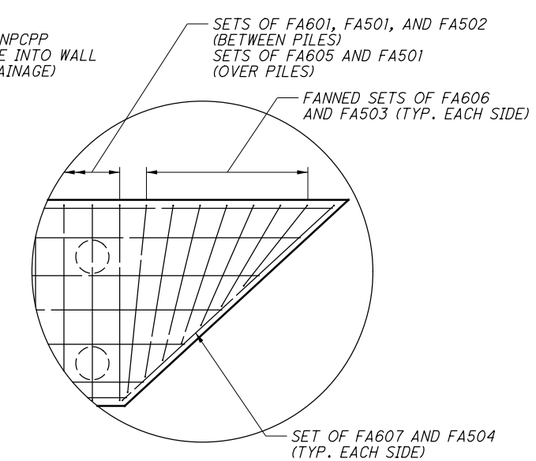

DETAIL C

(RIGHT SIDE OF FOOTING SHOWN, MIRROR ON LEFT SIDE)

NOTES:

1. EPOXY COATED REINFORCING STEEL PLACED IN CONFLICT WITH THE INTERACTION BETWEEN THE WINGWALL/CHEEKWALL AND THE MSE WALL SHALL BE FIELD CUT.
2. P.E.J.F. SHALL EXTEND THE FULL HEIGHT OF THE MSE WALL/WINGWALL JOINT.

NO.	DATE	DESCRIPTION
1	2024-09-10	RECORD DRAWINGS
0	2019-06-20	RFC

ISSUE RECORD

DESIGN AGENCY
Michael Baker INTERNATIONAL
1111 SUPERIOR AVE E., SUITE 2300, CLEVELAND, OH 44114

DESIGNED	DRAWN	REVIEWED	DATE
SSW	SSW	JWB	3/15/19
CHECKED	REVISED	STRUCTURE FILE NUMBER	
CDC		1801518	

RECORD PLANS

FORWARD ABUTMENT WINGWALL DETAILS
CUY-010-1978R
OH-10 EASTBOUND OVER GCRTA BLUE AND GREEN LINES

RECORD PLANS

CUY-IR490/SR010-2.09/19.28
PID No. 96833

RECORD PLANS

8 / 50

13 / 110

BU-19 - GCRTA BLUE/GREEN BRIDGES & CATENARY MODIFICATIONS
...\Sheets\010_1978R_SF403.dgn 11/21/2024 4:33:56 PM Rohit.Bk

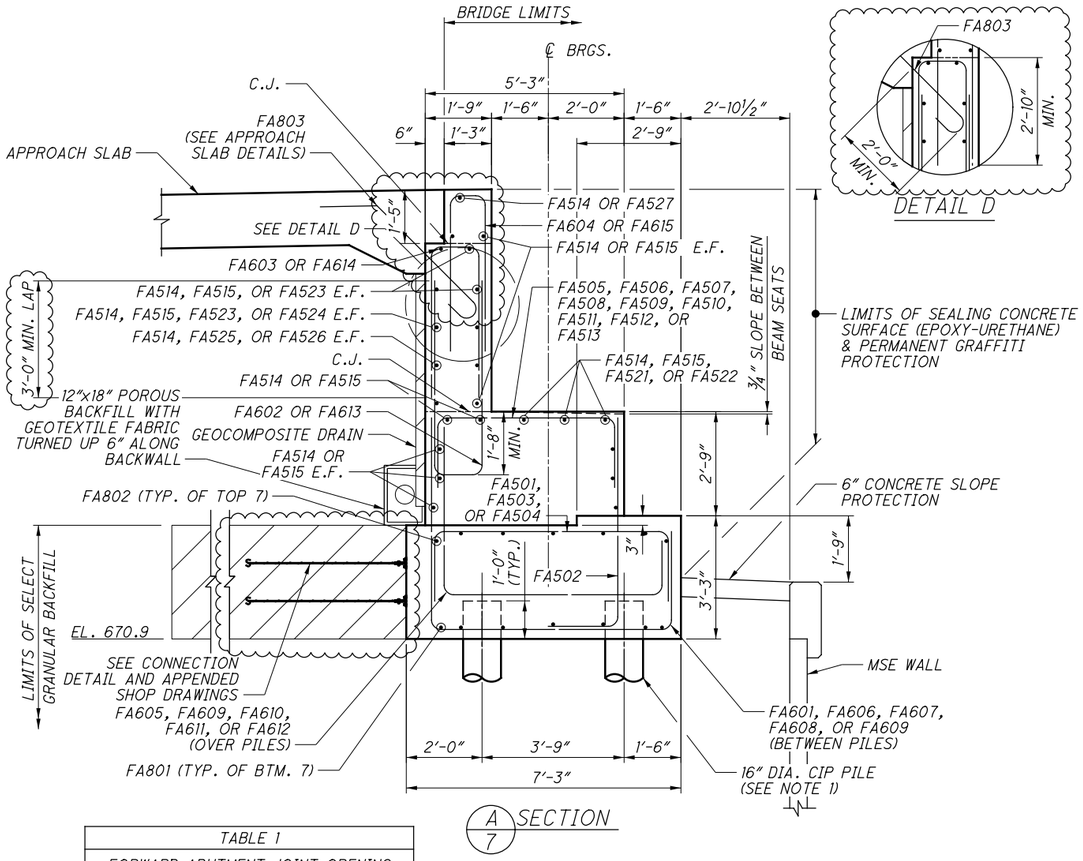

A/7 SECTION

DETAIL D

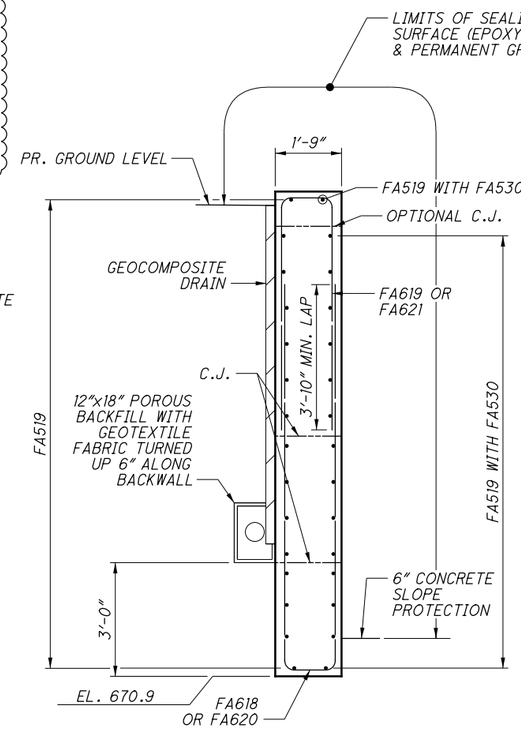

B/8 SECTION WINGWALL

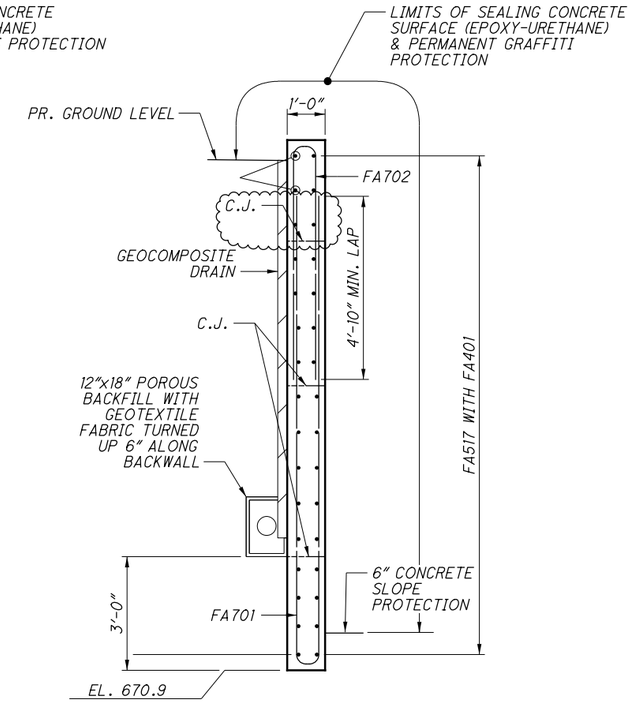

C/8 SECTION CHEEKWALL

TABLE 1	
FORWARD ABUTMENT JOINT OPENING TABLE (5" STRIP SEAL)	
TEMPERATURE °F	DIMENSION "A"
30	3"
40	2 7/8"
50	2 5/8"
60	2 1/2"
70	2 3/8"
80	2 1/8"
90	2"

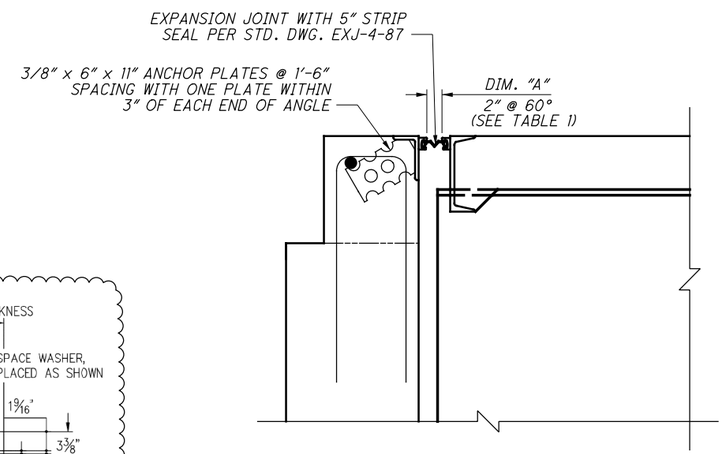

EXPANSION JOINT DETAIL

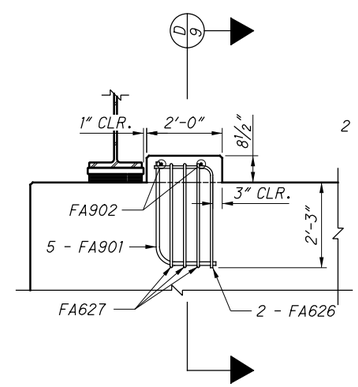

SEISMIC PEDESTAL ELEVATION

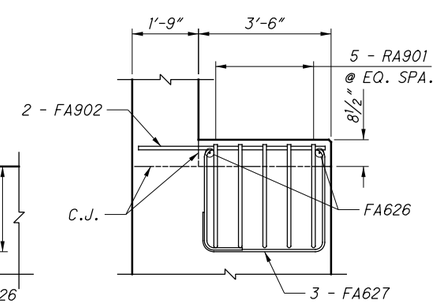

D/9 SECTION

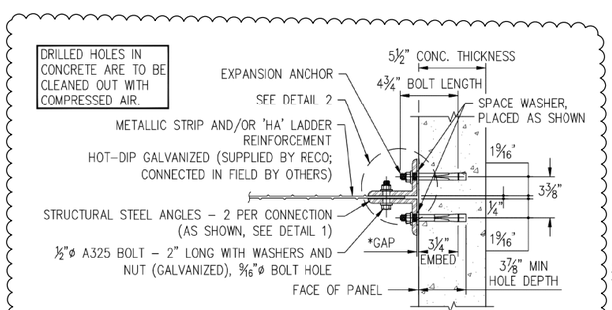

CONNECTION DETAIL

NOTES:

1. 1. YELLOW JACKET SLEEVES (FOUNDATION TECHNOLOGIES, INC., 400 PROGRESS INDUSTRIAL BLVD, LAWRENCEVILLE, GA 30043) WILL BE USED IN PLACE OF STANDARD PIPE SLEEVES. SEE BU-20 FOR ADDITIONAL INFORMATION.

2. THE CONTRACTOR SHALL PROVIDE REINFORCING STRAP ANCHORED TO ABUTMENT THAT PROVIDES 5.47 K/FT (UNFACTORED) RESISTANCE APPLIED PERPENDICULAR TO THE FACE OF THE ABUTMENT AT THE BASE OF CONCRETE FOOTING. REINFORCING STRIPS SHALL MEET REQUIREMENTS OF ODOT SUPPLEMENTAL SPECIFICATION 840. STRAPS SHALL BE METALLIC. CONTRACTOR DESIGN FOR REINFORCING STRAPS SHALL MET REQUIREMENTS OF SS 840. INCLUDED WITH ITEM 530 - STRUCTURE, MISC.: ABUTMENT REINFORCING STRAP FOR PAYMENT.

3. PROVIDE 2" CONCRETE COVER ON REINFORCEMENT BARS UNLESS NOTED OTHERWISE.

NO.	DATE	DESCRIPTION
1	2024-09-10	RECORD DRAWINGS
0	2019-06-20	RFC

ISSUE RECORD

DESIGN AGENCY
Michael Baker INTERNATIONAL
1111 SUPERIOR AVE E., SUITE 2300, CLEVELAND, OH 44114

DESIGNED	DRAWN	REVIEWED	DATE
SSW	SSW	JWB	3/15/19
CHECKED	REVISED	STRUCTURE FILE NUMBER	
CDC		1801518	

RECORD PLANS

FORWARD ABUTMENT SECTIONS
CUY-010-1978R
OH-10 EASTBOUND OVER GCRTA BLUE AND GREEN LINES

RECORD PLANS

CUY-IR490/SR010-2.09/19.28
PID No. 96833

RECORD PLANS

BU-19 - GCRTA BLUE/GREEN BRIDGES & CATENARY MODIFICATIONS
...\Sheets\010_1978R_SF402.dgn 10/6/2025 5:35:54 PM Gregory.Hertler

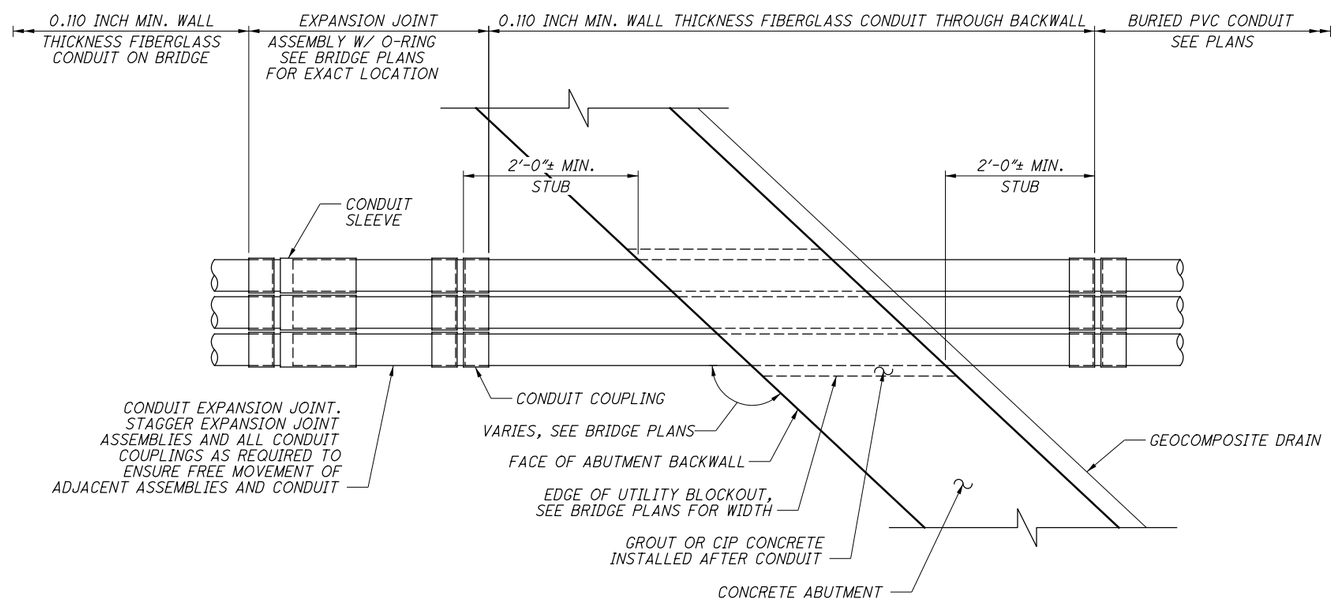

CPP DUCT AT ABUTMENT BACKWALL

TYP. FOR BOTH ABUTMENTS

NO.	DATE	DESCRIPTION
0	2019-06-20	RFC

ISSUE RECORD

DESIGN AGENCY
Michael Baker INTERNATIONAL
1111 SUPERIOR AVE E., SUITE 2300, CLEVELAND, OH 44114

DESIGNED	DRAWN	REVIEWED	DATE
SSW	SSW	JWB	3/15/19
CHECKED	REVISED	STRUCTURE FILE NUMBER	
KAG		1801518	

RECORD PLANS

ABUTMENT CONDUIT DETAILS

CUY-010-1978R

OH-10 EASTBOUND OVER GCRTA BLUE AND GREEN LINES

RECORD PLANS

CUY-IR490/SR010-2.09/19.28

PID No. 96833

RECORD PLANS

BU-19 - GCRTA BLUE/GREEN BRIDGES & CATENARY MODIFICATIONS

...\Sheets\010_1978R_SF404.dgn 6/27/2019 4:54:14 PM Christopher.Lemley

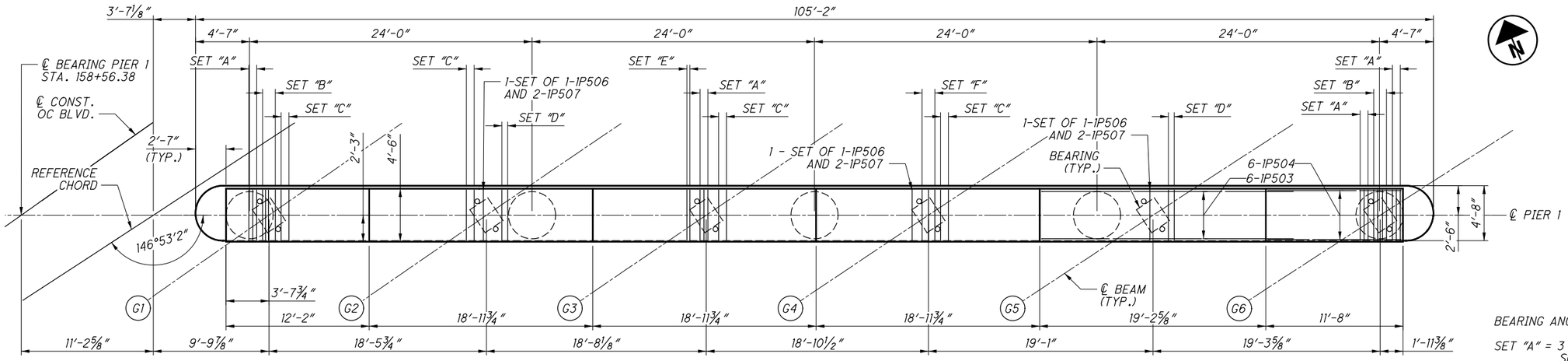

PLAN

MIN. SPLICE LENGTHS

BAR	LENGTH
5	3'-7"
6 HORIZ.	4'-4"
6 VERT.	3'-10"
9	9'-2"
10	11'-7"
11	14'-3"

PIER 1	
POINT	ELEVATION
A	679.77
B	679.84
C	679.92
D	679.96
E	680.07
F	680.22

BEARING ANCHOR REINFORCEMENT SETS:

SET "A" = 3 SETS OF 1-1P506 AND 2-1P507 SPA. @ 4"
SET "B" = 4 SETS OF 1-1P506 AND 2-1P507 SPA. @ 3" MIN.
SET "C" = 2 SETS OF 1-1P506 AND 2-1P507 SPA. @ 8"
SET "D" = 2 SETS OF 1-1P506 AND 2-1P507 SPA. @ 6"
SET "E" = 2 SETS OF 1-1P506 AND 2-1P507 SPA. @ 4"
SET "F" = 3 SETS OF 1-1P506 AND 2-1P507 SPA. @ 6 1/2"

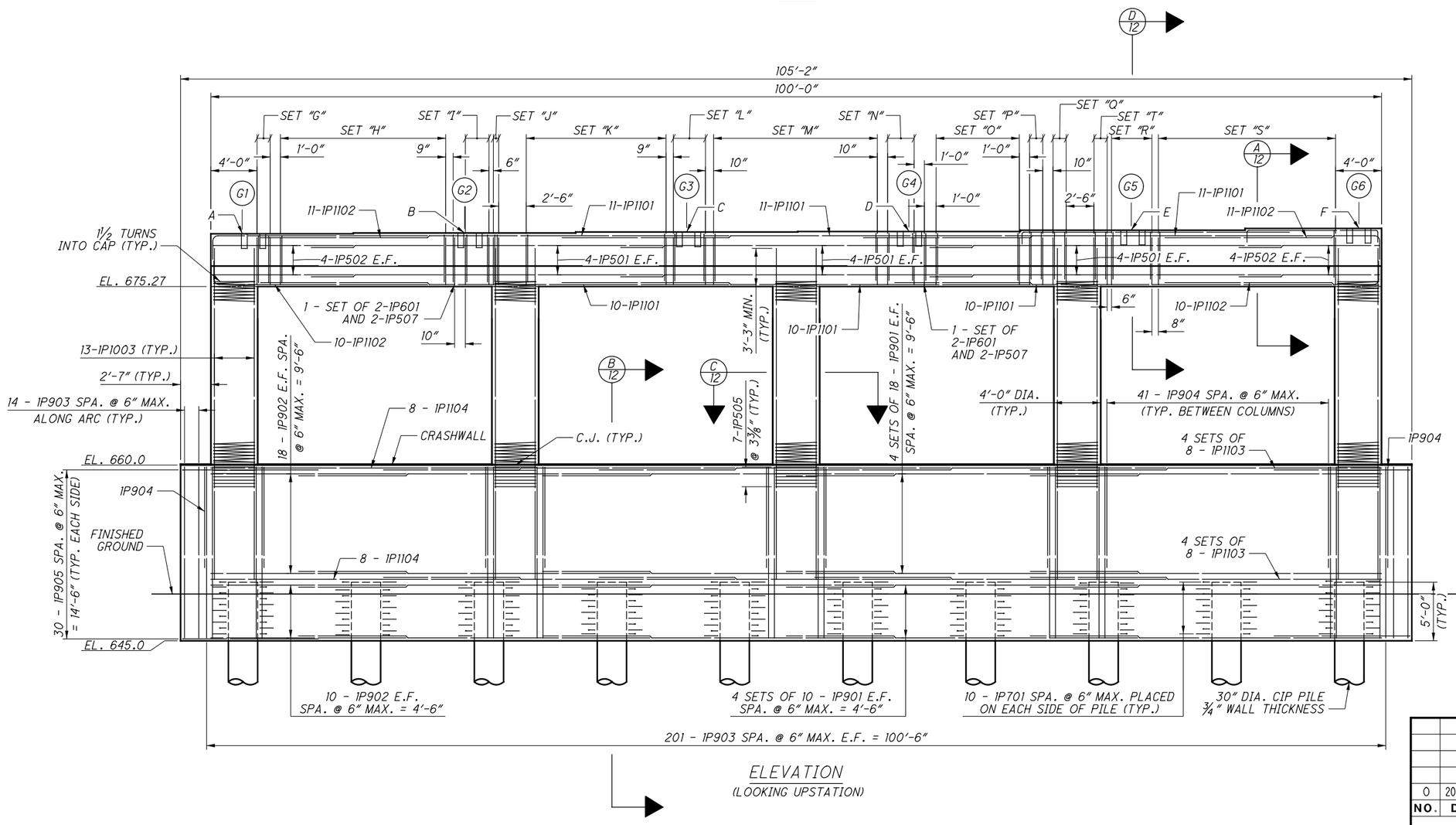

ELEVATION
(LOOKING UPSTATION)

PIER CAP SHEAR STIRRUP SETS:

SET "G" = 2 SETS OF 2-1P601 AND 2-1P507 SPA. @ 12" MAX. = 1'-0"

SET "H" = 15 SETS OF 2-1P601 SPA. @ 12" MAX. = 14'-0"

SET "I" = 5 SETS OF 2-1P601, 2-1P603, AND 2-1P507 SPA. @ 6" MAX. = 2'-0"

SET "J" = 2 SETS OF 2-1P601 AND 2-1P603 SPA. @ 6" MAX.

SET "K" = 13 SETS OF 2-1P601 SPA. @ 12" MAX. = 12'-0"

SET "L" = 4 SETS OF 2-1P601, 2-1P603, AND 2-1P507 SPA. @ 12" MAX. = 2'-6"

SET "M" = 15 SETS OF 2-1P601 AND 2-1P603 SPA. @ 12" MAX. = 14'-0"

SET "N" = 4 SETS OF 2-1P601, 2-1P603, AND 2-1P507 SPA. @ 12" MAX. = 2'-2"

SET "O" = 8 SETS OF 2-1P601 SPA. @ 12" MAX. = 7'-0"

SET "P" = 2 SETS OF 2-1P602 SPA. @ 12" MAX.

SET "Q" = 3 SETS OF 2-1P602 SPA. @ 6" MAX. = 1'-0"

SET "R" = 8 SETS OF 2-1P602, 2-1P604, AND 2-1P507 SPA. @ 6" MAX. = 3'-4"

SET "S" = 16 SETS OF 2-1P602 SPA. @ 12" MAX. = 15'-0"

SET "T" = 3 SETS OF 2-1P602 AND 2-1P604 SPA. @ 6" MAX. = 1'-0"

NO.	DATE	DESCRIPTION
0	2019-06-20	RFC

ISSUE RECORD

DESIGN AGENCY
Michael Baker INTERNATIONAL
1111 SUPERIOR AVE E., SUITE 2300, CLEVELAND, OH 44114

DESIGNED	CHECKED	DRAWN	REVISED	REVIEWED	DATE	STRUCTURE FILE NUMBER
ABP	KAG	BTD	SSW	JWB	3/15/19	1801518

RECORD PLANS

PIER 1 PLAN AND ELEVATION

CUY-010-1978R
OH-10 EASTBOUND OVER GCRTA BLUE AND GREEN LINES

RECORD PLANS

CUY-IR490/SR010-2.09/19.28
PID No. 96833

BU-19 - GCRTA BLUE/GREEN BRIDGES & CATENARY MODIFICATIONS
...\Sheets\010_1978R_S1401.dgn 6/27/2019 4:54:28 PM Christopher Lemley

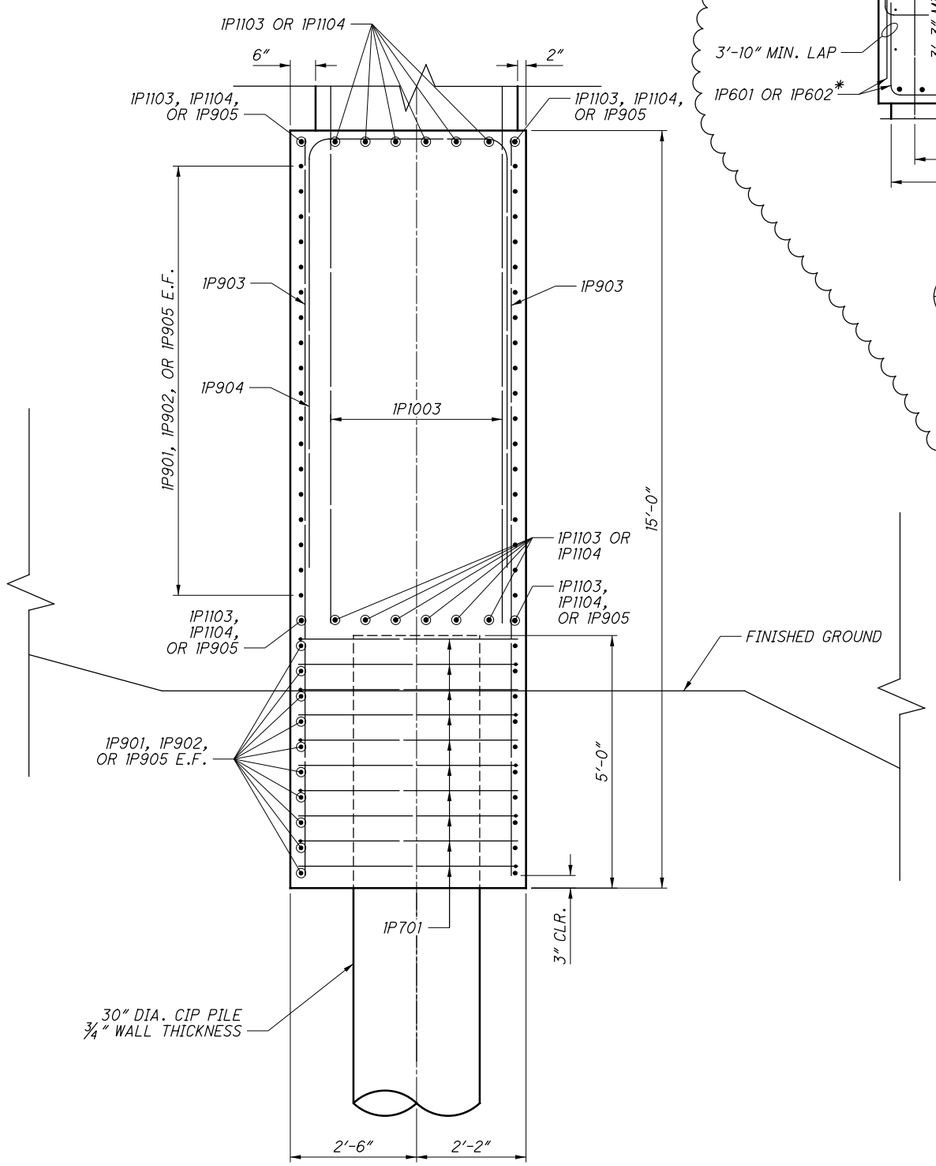

B/11 SECTION

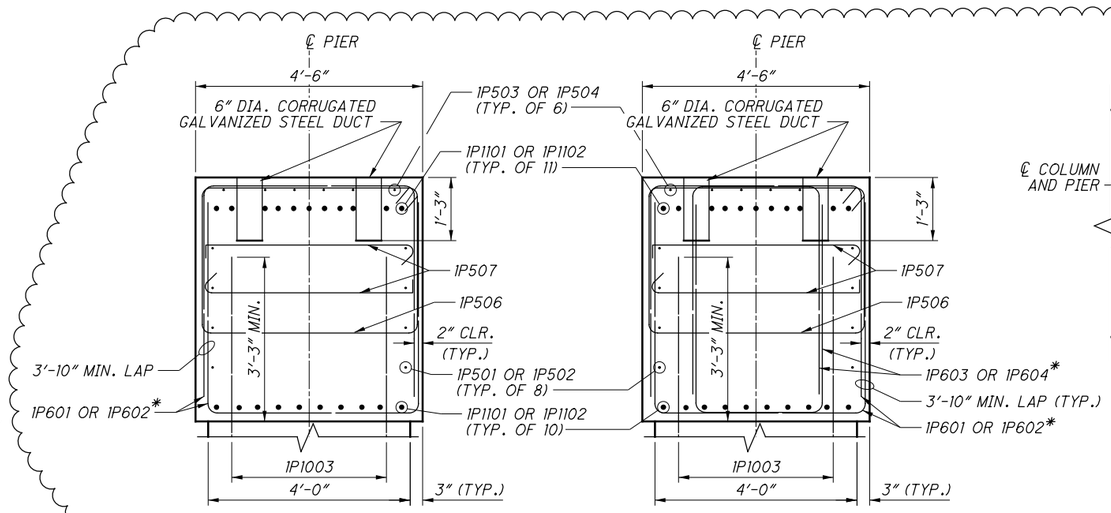

A/11 SECTION

D/11 SECTION

*PLACE LOWER 1P601, 1P602, 1P603 AND 1P604 BARS AJACENT TO BLOCKOUT TO ENSURE ADEQUATE SPACING BETWEEN VERTICAL BARS.

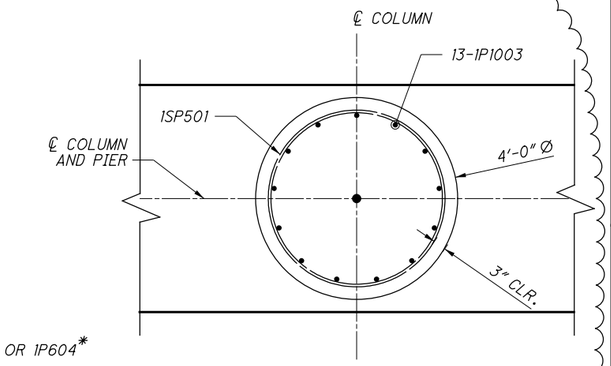

C/11 SECTION

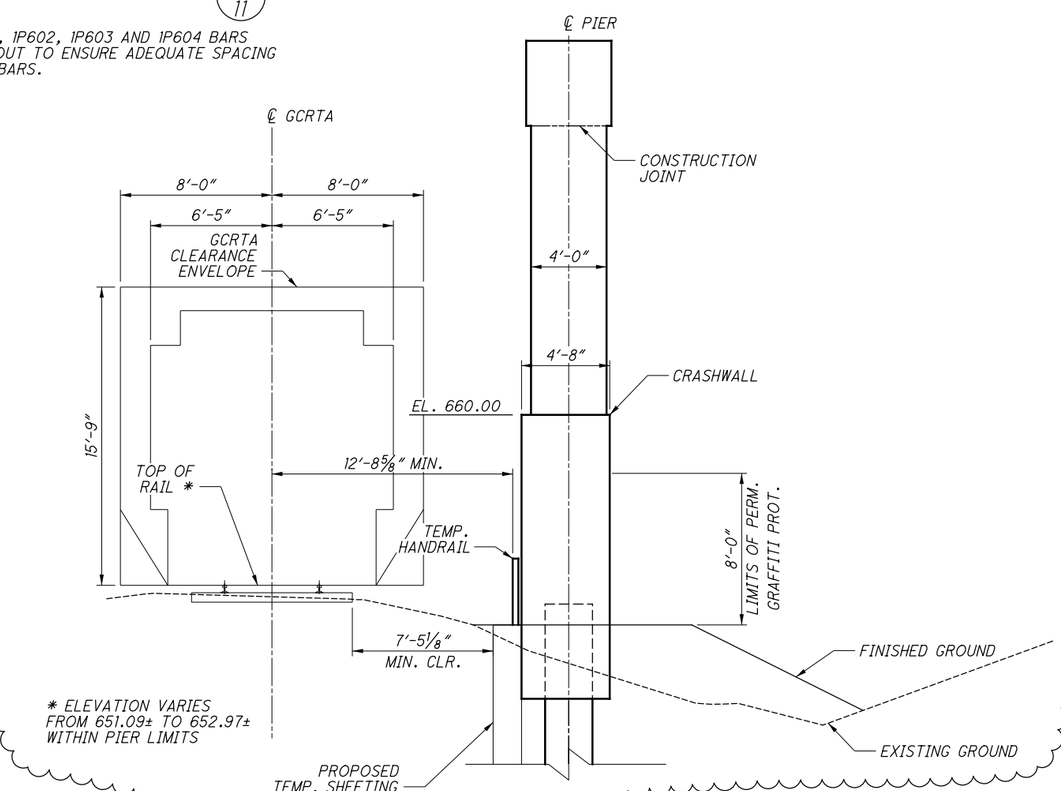

SECTION

NOTES:

1. SEE SHEET 15/50 FOR ADDITIONAL BEARING, ANCHOR ROD AND PLASTIC DUCT INFORMATION.
2. PROVIDE 2" CONCRETE COVER ON REINFORCEMENT BARS UNLESS NOTED OTHERWISE.

NO.	DATE	DESCRIPTION
1	2024-09-10	RECORD DRAWINGS
0	2019-06-20	RFC

ISSUE RECORD

DESIGN AGENCY
Michael Baker INTERNATIONAL
1111 SUPERIOR AVE E., SUITE 2300, CLEVELAND, OH 44114

DESIGNED	DRAWN	REVIEWED	DATE
ABP	BTD	JWB	3/15/19
CHECKED	REVISED	STRUCTURE FILE NUMBER	
KAG	SSW	1801518	

RECORD PLANS

PIER 1 SECTIONS
CUY-010-1978R
OH-10 EASTBOUND OVER GCRTA BLUE AND GREEN LINES

CUY-IR490/SR010-2.09/19.28
PID No. 96833

RECORD PLANS

BU-19 - GCRTA BLUE/GREEN BRIDGES & CATENARY MODIFICATIONS
...\Sheets\010_1978R_S1403.dgn 9/19/2025 6:06:16 PM Gregory.Hertler

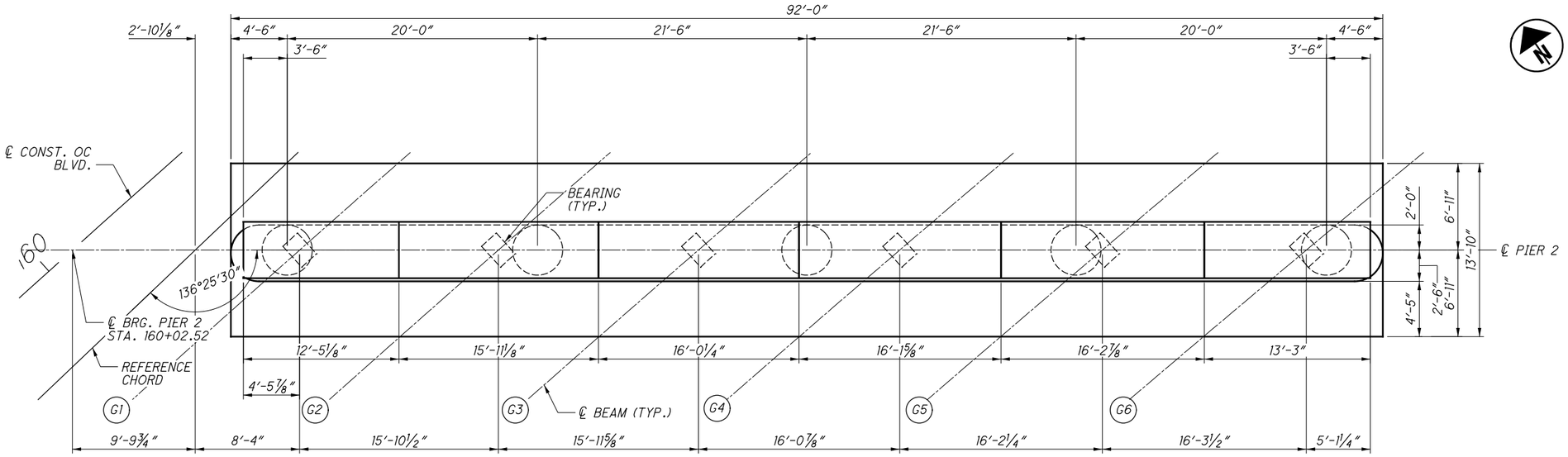

PLAN

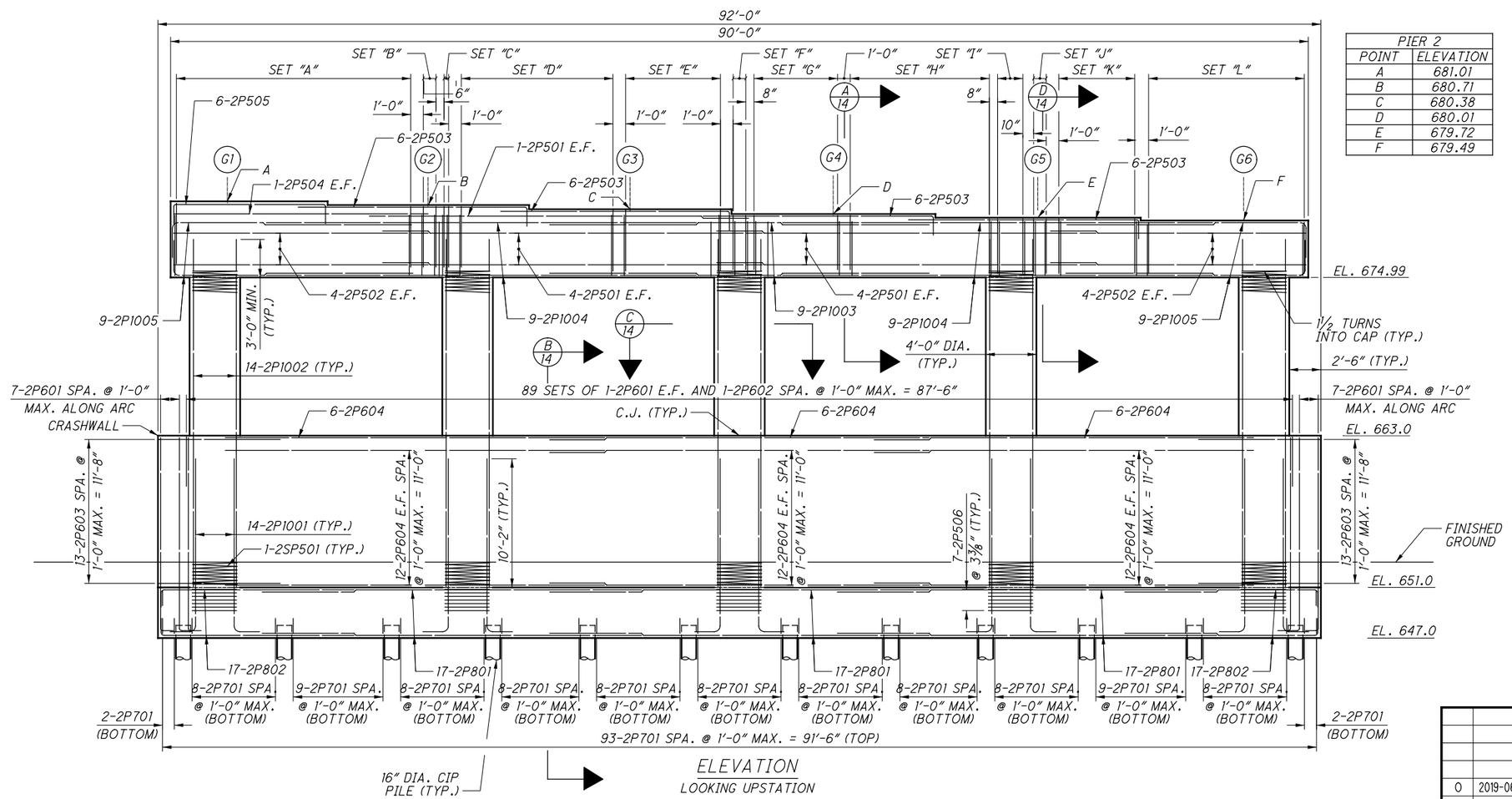

ELEVATION
LOOKING UPSTATION

PIER 2	
POINT	ELEVATION
A	681.01
B	680.71
C	680.38
D	680.01
E	679.72
F	679.49

PIER CAP SHEAR STIRRUP SETS:

SET "A" = 20 SETS OF 2-2P605 SPA. @ 1'-0" MAX. = 18'-10"

SET "B" = 4 SETS OF 2-2P605, & 2-2P606 SPA. @ 4" MAX. = 1'-0"

SET "C" = 2 SETS OF 2-2P605 & 2-2P606 SPA. @ 6" MAX. = 6"

SET "D" = 13 SETS OF 2-2P605 SPA. @ 1'-0" MAX. = 12'-0"

SET "E" = 11 SETS OF 2-2P605 SPA. @ 9" MAX. = 7'-6"

SET "F" = 2 SETS OF 2-2P607 SPA. @ 1'-0" MAX. = 1'-0"

SET "G" = 14 SETS OF 2-2P607 SPA. @ 6" MAX. = 6'-6"

SET "H" = 12 SETS OF 2-2P607 SPA. @ 1'-0" MAX. = 11'-0"

SET "I" = 3 SETS OF 2-2P607 SPA. @ 1'-0" MAX. = 2'-0"

SET "J" = 4 SETS OF 2-2P607 & 2-2P608 SPA. @ 4" MAX. = 1'-0"

SET "K" = 7 SETS OF 2-2P607 SPA. @ 1'-0" MAX. = 6'-0"

SET "L" = 14 SETS OF 2-SP609 SPA. @ 1'-0" MAX. = 12'-6 3/4"

MIN. SPLICE LENGTHS

BAR	LENGTH
5	3'-7"
6 HORIZ.	4'-4"
6 VERT.	3'-10"
8	7'-3"
10	11'-7"

NO.	DATE	DESCRIPTION
0	2019-06-20	RFC

ISSUE RECORD

DESIGN AGENCY
Michael Baker INTERNATIONAL
1111 SUPERIOR AVE E., SUITE 2300, CLEVELAND, OH 44114

DESIGNED	DRAWN	REVIEWED	DATE
ABP	BTD	JWB	3/15/19
CHECKED	REVISED	STRUCTURE FILE NUMBER	
KAG	MKB	1801518	

RECORD PLANS

PIER 2 PLAN AND ELEVATION
CUY-010-1978R
OH-10 EASTBOUND OVER GCRTA BLUE AND GREEN LINES

RECORD PLANS

CUY-IR490/SR010-2.09/19.28
PID No. 96833

RECORD PLANS

13/50

18/110

BU-19 - GCRTA BLUE/GREEN BRIDGES & CATENARY MODIFICATIONS
...\Sheets\010_1978R_S1402.dgn 6/27/2019 4:54:51 PM Christopher.Lemley

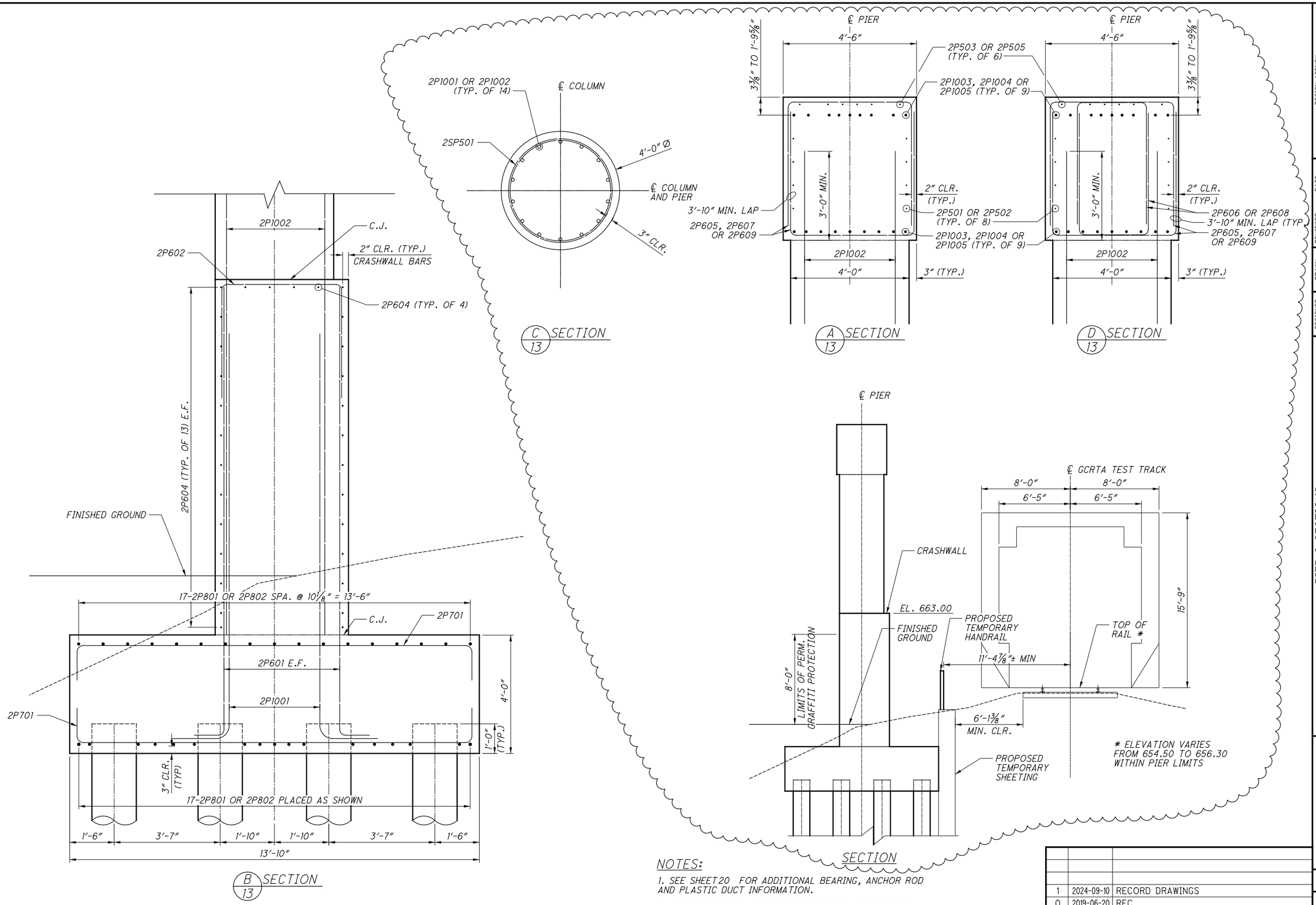

NOTES:

1. SEE SHEET 20 FOR ADDITIONAL BEARING, ANCHOR ROD AND PLASTIC DUCT INFORMATION.

2. PROVIDE 2" CONCRETE COVER ON REINFORCEMENT BARS UNLESS NOTED OTHERWISE.

NO.	DATE	DESCRIPTION
1	2024-09-10	RECORD DRAWINGS
0	2019-06-20	RFC

ISSUE RECORD

DESIGN AGENCY
Michael Baker INTERNATIONAL
1111 SUPERIOR AVE E., SUITE 2300, CLEVELAND, OH 44114

DESIGNED	DRAWN	REVIEWED	DATE
ABP	BTD	JWB	3/15/19
CHECKED	REVISED	STRUCTURE FILE NUMBER	
KAG	MKB	1801518	

RECORD PLANS

PIER 2 SECTIONS
CUY-010-1978R
OH-10 EASTBOUND OVER GCRTA BLUE AND GREEN LINES

RECORD PLANS

CUY-IR490/SR010-2.09/19.28
PID No. 96833

RECORD PLANS

14/50

19/110

BU-19 - GCRTA BLUE/GREEN BRIDGES & CATENARY MODIFICATIONS
...\Sheets\010_1978R_SI404.dgn 9/19/2025 6:06:27 PM Gregory.Hertler

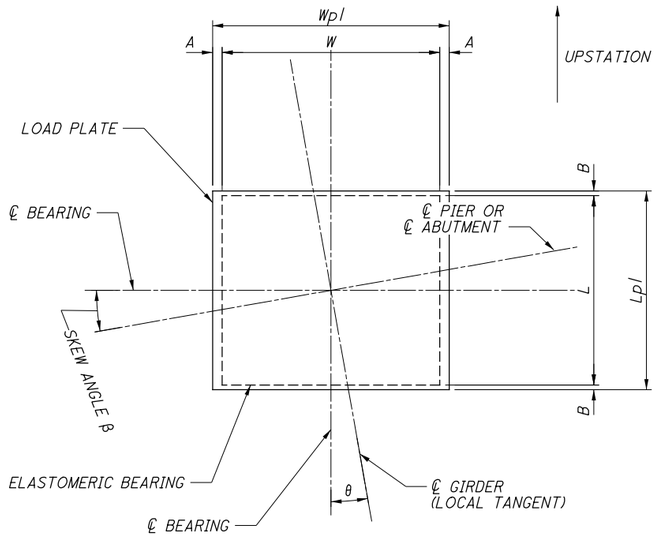

PLAN VIEW

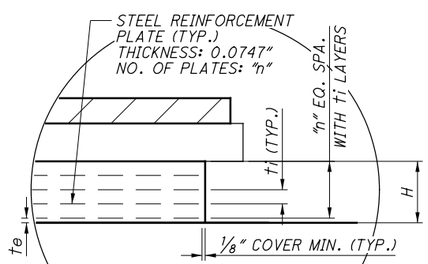

DETAIL A (THIS PAGE)

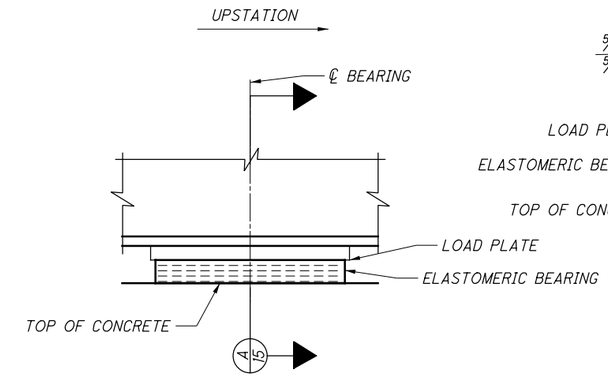

ELEVATION VIEW

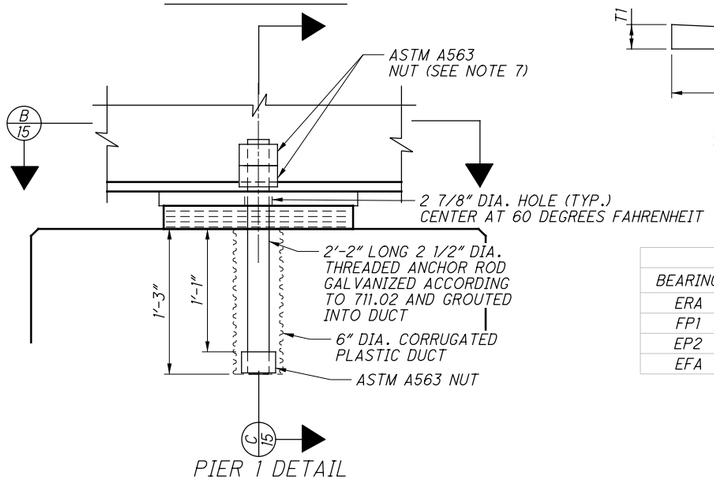

PIER 1 DETAIL

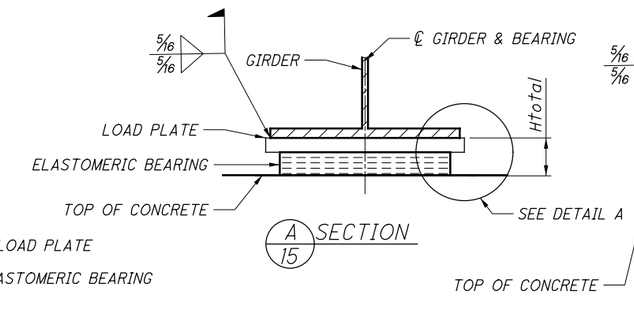

A SECTION

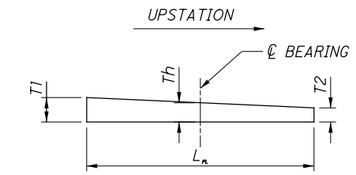

LOAD PLATE BEVEL

ALONG Lplate

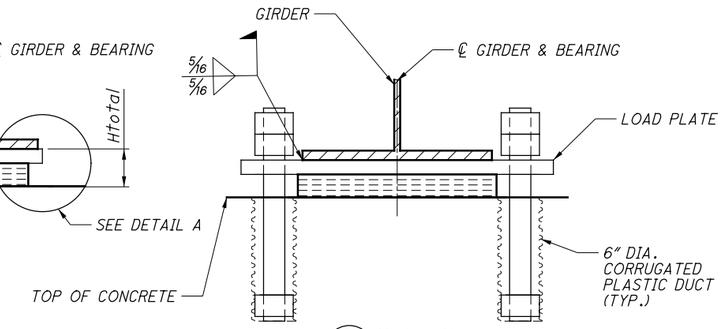

C SECTION

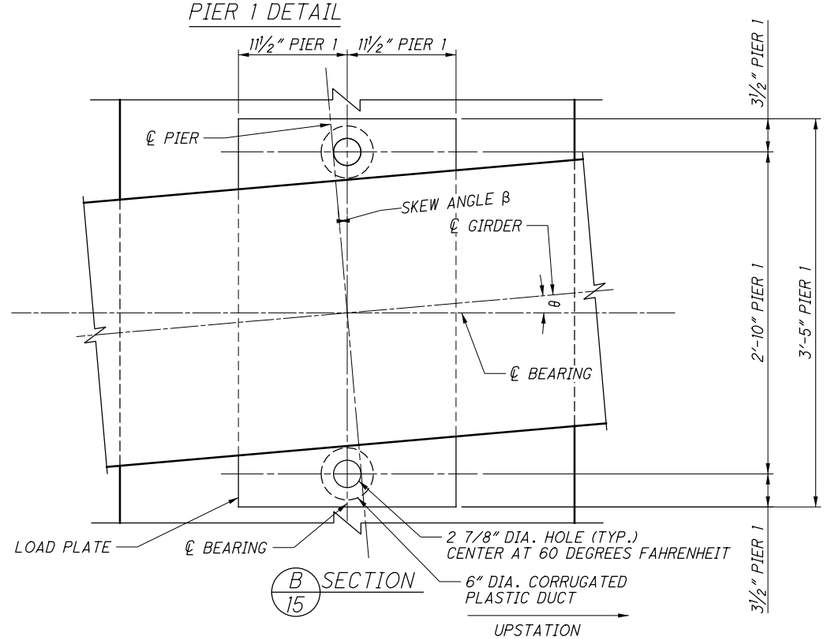

B SECTION

BEARING DATA										
BEARING	BEARING LOCATION	W	L	A	B	te	ti	n	H	H_{total}
ERA	REAR ABUTMENT	17"	16"	4 1/2"	1/2"	1/4"	1/2"	8	4.84"	6.34"
FP1	PIER 1	28"	22"	6 1/2"	1/2"	1/4"	5/8"	5	3.75"	5.25"
EP2	PIER 2	27"	20"	1/2"	1/2"	1/4"	5/8"	5	3.75"	5.25"
EFA	FORWARD ABUTMENT	17"	16"	4 1/2"	1/2"	3/8"	5/8"	5	3.87"	5.37"

LOAD PLATE DIMENSIONS					
BEARING LOCATION	T_1	T_2	T_h	W_{PL}	L_{PL}
REAR ABUTMENT	1 5/16"	1 11/16"	1 1/2"	2'-2"	1'-5"
PIER 1	1 1/4"	1 3/4"	1 1/2"	3'-5"	1'-11"
PIER 2	1 1/2"	1 1/2"	1 1/2"	2'-4"	1'-9"
FORWARD ABUTMENT	1 11/16"	1 5/16"	1 1/2"	2'-2"	1'-5"

BEARING DESIGN LOADS (KIPS)				
	R.A.	PIER 1	PIER 2	F.A.
DEAD LOAD	196	543	469	136
LIVE LOAD	107	212	195	109
TOTAL DESIGN LOAD	303	755	664	245

SKEW ANGLE β				
	R.A.	PIER 1	PIER 2	F.A.
BRG. 1 (12.08 RT)	37°41'58"	56°21'23"	47°45'09"	44°14'22"
BRG. 2 (22.58 RT)	37°41'58"	56°21'23"	47°45'09"	44°14'22"
BRG. 3 (33.08 RT)	37°41'58"	56°21'23"	47°45'09"	44°14'22"
BRG. 4 (43.58 RT)	37°41'58"	56°21'23"	47°45'09"	44°14'22"
BRG. 5 (54.08 RT)	37°41'58"	56°21'23"	47°45'09"	44°14'22"
BRG. 6 (64.58 RT)	37°41'58"	56°21'23"	47°45'09"	44°14'22"

GIRDER TO BEARING ANGLE θ				
	R.A.	PIER 1	PIER 2	F.A.
BRG. 1 (12.08 RT)	02°57'57"	01°10'30"	-00°40'47"	-01°33'08"
BRG. 2 (22.58 RT)	02°46'26"	00°46'32"	-00°59'32"	-01°50'13"
BRG. 3 (33.08 RT)	02°34'48"	00°22'06"	-01°18'35"	-02°07'34"
BRG. 4 (43.58 RT)	02°23'00"	-00°02'50"	-01°37'57"	-02°25'10"
BRG. 5 (54.08 RT)	02°11'05"	-00°28'18"	-01°57'38"	-02°43'03"
BRG. 6 (64.58 RT)	01°59'00	-00°54'19"	-02°17'38"	-03°01'12"

NOTES:

1. THE ELASTOMER SHALL HAVE A HARDNESS OF 50 DUROMETER. THE BEARINGS WERE DESIGNED IN ACCORDANCE WITH SECTION 14.7.6 (METHOD A) OF THE AASHTO LRFD BRIDGE DESIGN SPECIFICATIONS. THE LONG-TERM COMPRESSION PROOF LOAD TEST (AASHTO STANDARD SPECIFICATIONS FOR HIGHWAY BRIDGES, DIVISION II, SECTION 18.7.2.6) IS NOT REQUIRED.
2. THE STEEL LOAD PLATE SHALL BE ASTM A709 GRADE 50 STEEL AND SHALL BE COATED IN ACCORDANCE WITH ITEMS 513 AND 514.
3. THE STEEL LOAD PLATE SHALL BE BONDED BY VULCANIZATION TO THE ELASTOMER DURING THE MOLDING PROCESS. CONTROL WELDING OF THE LOAD PLATE TO THE SUPERSTRUCTURE SO THAT THE PLATE TEMPERATURE AT THE ELASTOMER BONDED SURFACE DOES NOT EXCEED 300°F AS DETERMINED BY THE USE OF PYROMETRIC STICKS OR OTHER TEMPERATURE MONITORING DEVICES.
4. EACH BEARING ASSEMBLY SHALL BE SHOP MARKED WITH THE FOLLOWING INFORMATION: TOP, FORWARD STATION DIRECTION, LOCATION (REAR ABUTMENT, PIER 1, PIER 2 OR FORWARD ABUTMENT) AND BEAM NUMBER. ALL BEARINGS SHALL BE MARKED PRIOR TO SHIPPING. THE MARKS SHALL INCLUDE THE BEARING LOCATION ON THE BRIDGE, AND A DIRECTION ARROW THAT POINTS UP-STATION. ALL MARKS SHALL BE PERMANENT AND BE VISIBLE AFTER THE BEARING IS INSTALLED.
5. FURNISH AND INSTALL LAMINATED ELASTOMERIC BEARINGS PER ITEM 516 - ELASTOMERIC BEARING WITH INTERNAL LAMINATES AND LOAD PLATE.
6. ANCHOR RODS SHALL BE ASTM ASTM F1554, GRADE 105. NUTS SHALL CONFORM TO ASTM A563 FOR APPROPRIATE GRADE AND SIZE OF ANCHOR BOLT. WASHERS SHALL CONFORM TO ASTM F436.
7. INSTALL LOWER NUT IN CONTACT WITH TOP PLATE AND THEN BACK OFF ½ TURN. INSTALL UPPER NUT SNUG TIGHT TO PREVENT LOWER NUTS FROM LOOSENING.

NO.	DATE	DESCRIPTION
1	2024-09-10	RECORD DRAWINGS
0	2019-06-20	RFC

ISSUE RECORD

DESIGN AGENCY
Michael Baker INTERNATIONAL
1111 SUPERIOR AVE E., SUITE 2300, CLEVELAND, OH 44114

DESIGNED	DRAWN	REVIEWED	DATE
GMC	GMC	JWB	3/15/19
CHECKED	REVISED	STRUCTURE FILE NUMBER	
KAG		1801518	

RECORD PLANS

ELASTOMERIC BEARING DETAILS

CUY-010-1978R

OH-10 EASTBOUND OVER GCRTA BLUE AND GREEN LINES

RECORD PLANS

CUY-IR490/SR010-2.09/19.28

PID No. 96833

RECORD PLANS

BU-19 - GCRTA BLUE/GREEN BRIDGES & CATENARY MODIFICATIONS

...\Sheets\010_1978R_SB401.dgn 11/21/2024 4:36:06 PM Rohit.Bk

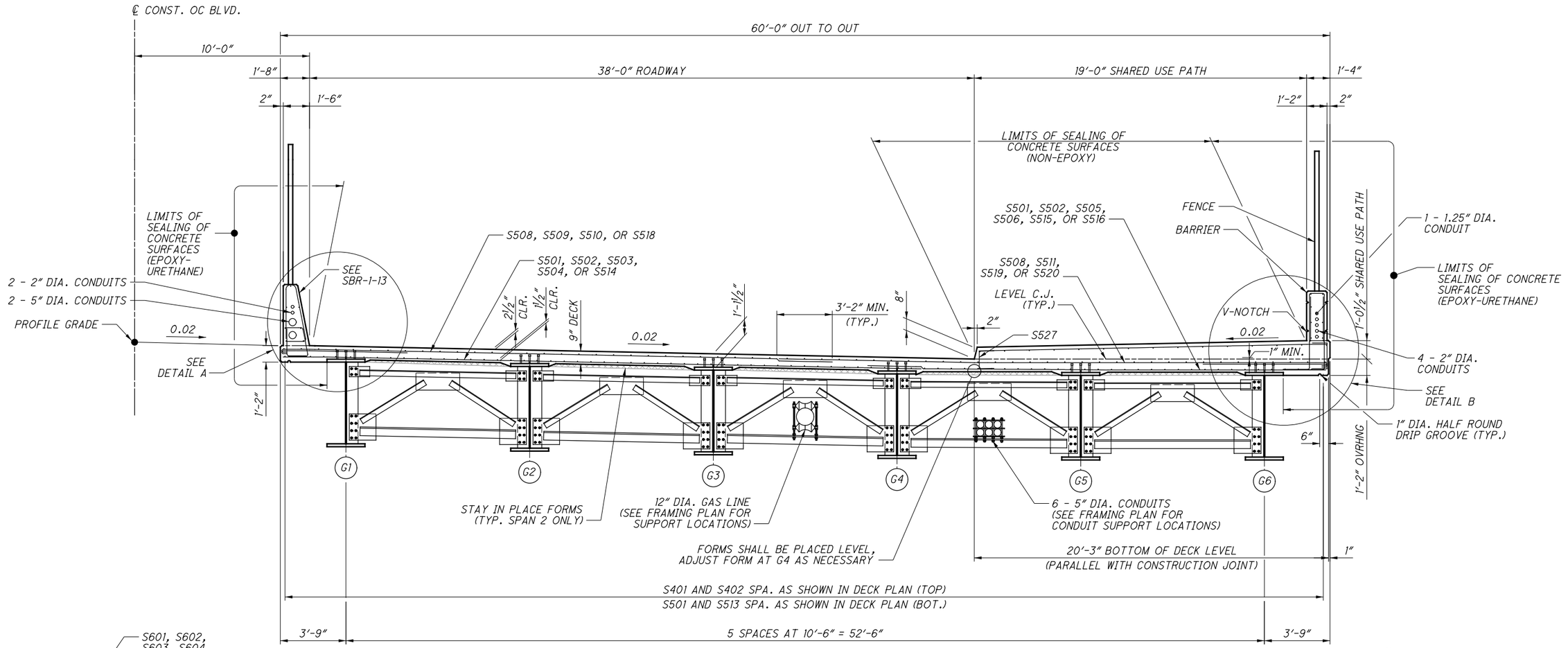

TRANSVERSE SECTION

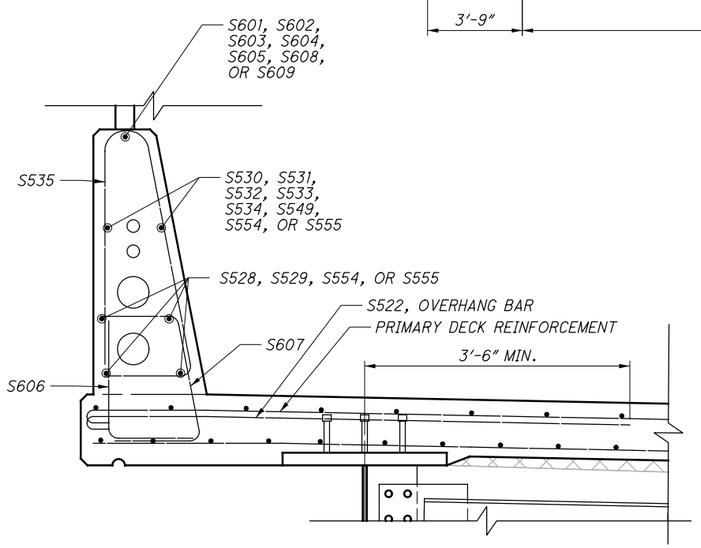

DETAIL A

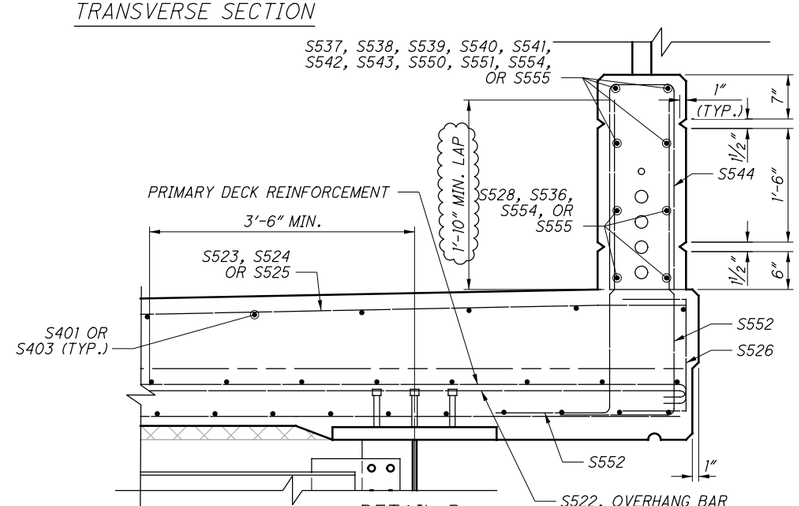

DETAIL B

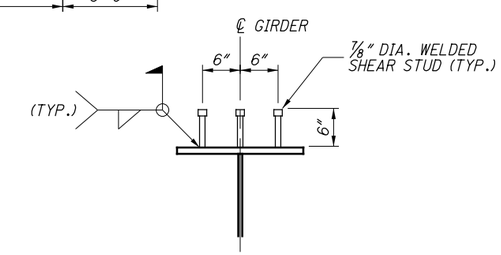

SHEAR STUD DETAIL

NOTES:

1. GRAFFITI PROTECTION SHALL BE APPLIED TO PARAPETS AND AESTHETIC PYLONS.
2. PROVIDE 2" CONCRETE COVER ON REINFORCEMENT BARS UNLESS NOTED OTHERWISE.
3. SEE ABUTMENT DETAILS FOR LOCATION OF S554, S555, S608, AND S609 BARS.

NO.	DATE	DESCRIPTION
2	2024-09-10	RECORD DRAWINGS
1	2021-05-18	DC056
0	2019-03-13	RFC

ISSUE RECORD

DESIGN AGENCY
Michael Baker INTERNATIONAL
1111 SUPERIOR AVE E., SUITE 2300, CLEVELAND, OH 44114

DESIGNED	DRAWN	REVIEWED	DATE
ETB	KAG	JWB	3/01/19
CHECKED	REVISED	STRUCTURE FILE NUMBER	
EKW		1801518	

RECORD PLANS

TRANSVERSE SECTION
CUY-010-1978R
OH-10 EASTBOUND OVER GCRTA BLUE AND GREEN LINES

RECORD PLANS

CUY-IR490/SR010-2.09/19.28
PID No. 96833

RECORD PLANS

16/50

21/110

BU-19 - GCRTA BLUE/GREEN BRIDGES & CATENARY MODIFICATIONS
...\Sheets\010_1978R_ST401.dgn 11/21/2024 5:31:28 PM Rohit.Bk

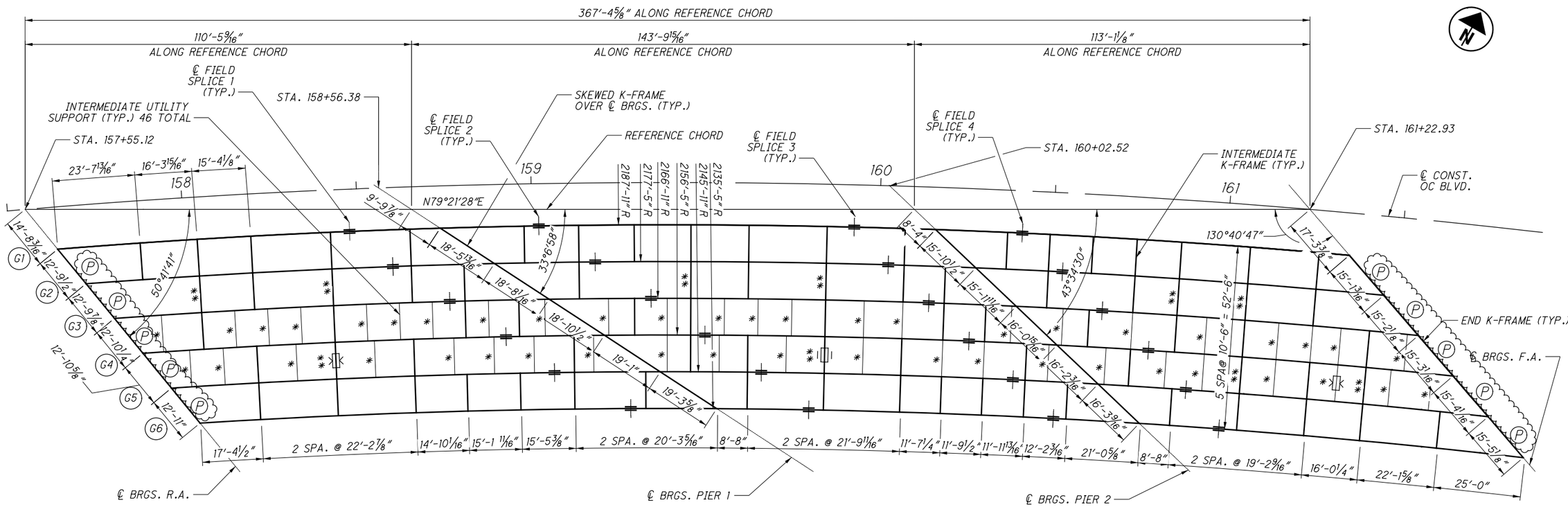

FRAMING PLAN

	INTERMEDIATE K-FRAME, LEAN ON BRACING, AND UTILITY SUPPORT BRACING LOCATIONS MEASURED ALONG ℄ GIRDER (MEASURED FROM ℄ OF BRGS. R.A.)																		
	1	2	3	4	5	6	7	8	9	10	11	12	13	14	15	16	17	18	19
G1	23'-7 13/16"	39'-11 3/4"	55'-3 13/16"	78'-1 5/16"	100'-10 3/4"	133'-6 1/4"	149'-1 3/8"	165'-0 3/8"	181'-3 5/16"	197'-10 1/2"	220'-2 5/8"	242'-6 3/4"	271'-10 7/16"	284'-0 7/16"	296'-4 13/16"	308'-11 5/8"	321'-9"	341'-5 1/4"	361'-1 1/2"
G2 L	16'-3"	32'-5 15/16"	47'-9 3/16"	70'-5 3/8"	93'-1 1/2"	125'-7 1/16"	141'-1 5/16"	156'-11 3/8"	173'-1 7/16"	189'-7 5/8"	211'-10 1/2"	234'-1 5/16"	263'-3 5/16"	275'-4 5/8"	287'-8 5/16"	300'-2 3/8"	312'-11"	332'-6 1/8"	352'-1 1/4"
G2 R	32'-5 15/16"	47'-9 3/16"	70'-5 3/8"	93'-1 1/2"	108'-3 1/16"	141'-1 5/16"	173'-1 7/16"	189'-7 5/8"	211'-10 1/2"	234'-1 5/16"	245'-11 5/16"	275'-4 5/8"	300'-2 3/8"	312'-11"	332'-6 1/8"	352'-1 1/4"	-	-	-
G3 L	25'-0"	40'-2 5/16"	62'-9 3/16"	85'-4"	100'-4 3/4"	133'-1 1/16"	164'-11 5/16"	181'-4 9/16"	203'-6 1/8"	225'-7 11/16"	237'-5"	266'-8 5/8"	291'-4 15/16"	304'-0 13/16"	323'-6 13/16"	343'-0 3/4"	-	-	-
G3 R	13'-5 3/16"	25'-0"	34'-5 5/16"	43'-10 9/16"	53'-3 7/8"	62'-9 3/16"	72'-2 1/16"	81'-6 15/16"	90'-11 13/16"	100'-4 3/4"	107'-0 7/8"	115'-9 1/16"	123'-2 1/16"	141'-4 3/4"	148'-10 1/4"	158'-2 3/8"	164'-11 5/16"	174'-7 1/16"	184'-2 3/4"
G4 L	5'-11 11/16"	17'-5 13/16"	26'-10 9/16"	36'-3 5/16"	45'-8 1/16"	55'-0 13/16"	64'-5 1/8"	73'-9 1/2"	83'-1 13/16"	92'-6 3/16"	99'-1 15/16"	107'-9 5/8"	115'-2 1/8"	133'-3 13/16"	140'-8 13/16"	150'-0 7/16"	156'-9"	166'-4 3/16"	175'-11 5/16"
G4 R	13'-4 1/4"	22'-11 3/4"	32'-7 1/4"	43'-10 1/16"	55'-0 13/16"	66'-3 9/16"	77'-6 5/16"	88'-11 15/16"	100'-5 9/16"	111'-11 3/16"	123'-4 13/16"	128'-11 7/8"	150'-0 7/16"	156'-9"	164'-11 3/16"	173'-1 5/16"	184'-1 7/16"	195'-1 9/16"	206'-1 11/16"
G5 L	5'-10 1/8"	15'-5 1/16"	25'-0"	36'-2 1/8"	47'-4 3/16"	58'-6 5/16"	69'-8 7/16"	81'-1 3/8"	92'-6 3/8"	103'-11 5/16"	115'-4 1/4"	120'-10 15/16"	141'-10 5/16"	148'-6 1/2"	156'-8 3/16"	164'-9 13/16"	175'-9 5/16"	186'-8 13/16"	197'-8 5/16"
G5 R	25'-0"	47'-4 3/16"	69'-8 7/16"	84'-7 3/8"	99'-9 15/16"	115'-4 1/4"	135'-8 13/16"	164'-9 13/16"	186'-8 13/16"	208'-7 3/4"	220'-3 3/4"	232'-1 15/16"	244'-2 1/2"	256'-5 3/8"	286'-3 13/16"	305'-7 1/2"	324'-11 3/16"	341'-0 7/16"	363'-3 5/16"
G6	17'-4 1/2"	39'-7 3/8"	61'-10 5/16"	76'-8 3/8"	91'-10 1/16"	107'-3 7/16"	127'-6 3/4"	156'-6 1/8"	178'-3 13/16"	200'-1 1/2"	211'-8 3/4"	223'-6 1/4"	235'-6 1/8"	247'-8 5/16"	277'-4 15/16"	296'-7 1/2"	315'-10 1/16"	331'-10 3/8"	353'-11 15/16"

	20	21	22	23	24	25	26	27	28	29	30	31	32	33	34	35	36	37
G1	-	-	-	-	-	-	-	-	-	-	-	-	-	-	-	-	-	-
G2 L	-	-	-	-	-	-	-	-	-	-	-	-	-	-	-	-	-	-
G2 R	-	-	-	-	-	-	-	-	-	-	-	-	-	-	-	-	-	-
G3 L	-	-	-	-	-	-	-	-	-	-	-	-	-	-	-	-	-	-
G3 R	193'-10 7/16"	203'-6 1/8"	214'-6 7/8"	225'-7 11/16"	237'-5"	249'-4 5/8"	256'-9 9/16"	271'-6 1/8"	278'-11 9/16"	291'-4 15/16"	304'-0 13/16"	312'-7 7/8"	323'-6 13/16"	333'-3 3/4"	343'-0 3/4"	351'-2 5/16"	359'-3 7/8"	370'-2 5/16"
G4 L	185'-6 7/16"	195'-1 9/16"	206'-1 11/16"	217'-1 13/16"	228'-10 1/2"	240'-9 3/8"	248'-1 15/16"	262'-9 9/16"	270'-2 5/8"	282'-7 1/4"	295'-2 7/16"	303'-8 15/16"	314'-7 1/4"	324'-3 11/16"	334'-0 1/16"	342'-1 3/16"	350'-2 1/4"	361'-0 1/16"
G4 R	217'-1 13/16"	228'-10 1/2"	240'-9 3/8"	252'-10 5/8"	259'-3 1/2"	275'-7 1/16"	282'-7 1/4"	292'-10 5/8"	303'-8 15/16"	314'-7 1/4"	324'-3 11/16"	334'-0 1/16"	342'-1 3/16"	350'-2 1/4"	357'-4 11/16"	369'-0 15/16"	-	-
G5 L	208'-7 3/4"	220'-3 3/4"	232'-1 15/16"	244'-2 1/2"	250'-6 15/16"	266'-9 9/16"	273'-9 3/8"	284'-0 1/8"	294'-9 13/16"	305'-7 1/2"	315'-3 5/16"	324'-11 3/16"	332'-11 13/16"	341'-0 7/16"	348'-2 7/16"	359'-10"	-	-
G5 R	-	-	-	-	-	-	-	-	-	-	-	-	-	-	-	-	-	-
G6	-	-	-	-	-	-	-	-	-	-	-	-	-	-	-	-	-	-

NOTES:

1. SEE GIRDER ELEVATION SHEET FOR ADDITIONAL INFORMATION.
2. EXPANSION JOINT AND STOP RING ANCHOR TYPES LOCATED PER INSTRUCTIONS PROVIDED BY OSBURN AND ASSOCIATES CATALOG.
3. REMOVE THE CONNECTION PLATE FROM BACK OF CHANNEL ON THE JOINT AND WELD TO BOTTOM OF CHANNEL FOR K-FRAMES BETWEEN GIRDERS G4-G5 AND G5-G6.

LEGEND:

* UTILITY SUPPORT
** LEAN ON BRACING
ANCHOR TYPE SUPPORT WITH STOP RING RESTRAINT
ANCHOR TYPE SUPPORT WITH EXPANSION JOINT

(P) FRAMES/CROSS FRAMES/DIAPHRAGMS PAINTED WITHIN 10'-0" FROM THE CENTERLINE OF BEARING

NO.	DATE	DESCRIPTION
2	2024-09-10	RECORD DRAWINGS
1	2019-05-17	DC006, DRFI005
0	2019-03-13	RFC

ISSUE RECORD

DESIGN AGENCY
Michael Baker INTERNATIONAL
1111 SUPERIOR AVE E., SUITE 2300, CLEVELAND, OH 44114

DESIGNED	DRAWN	REVIEWED	DATE
ETB	ETB	JWB	3/01/19
CHECKED	REVISED	STRUCTURE FILE NUMBER	
JCC		1801518	

RECORD PLANS

FRAMING PLAN
CUY-010-1978R
OH-10 EASTBOUND OVER GCRTA BLUE AND GREEN LINES

RECORD PLANS

CUY-IR490/SR010-2.09/19.28
PID No. 96833

RECORD PLANS

BU-19 - GCRTA BLUE/GREEN BRIDGES & CATENARY MODIFICATIONS
...\Sheets\010_1978R_SD401.dgn 12/11/2024 5:06:23 PM Rohit.Bk

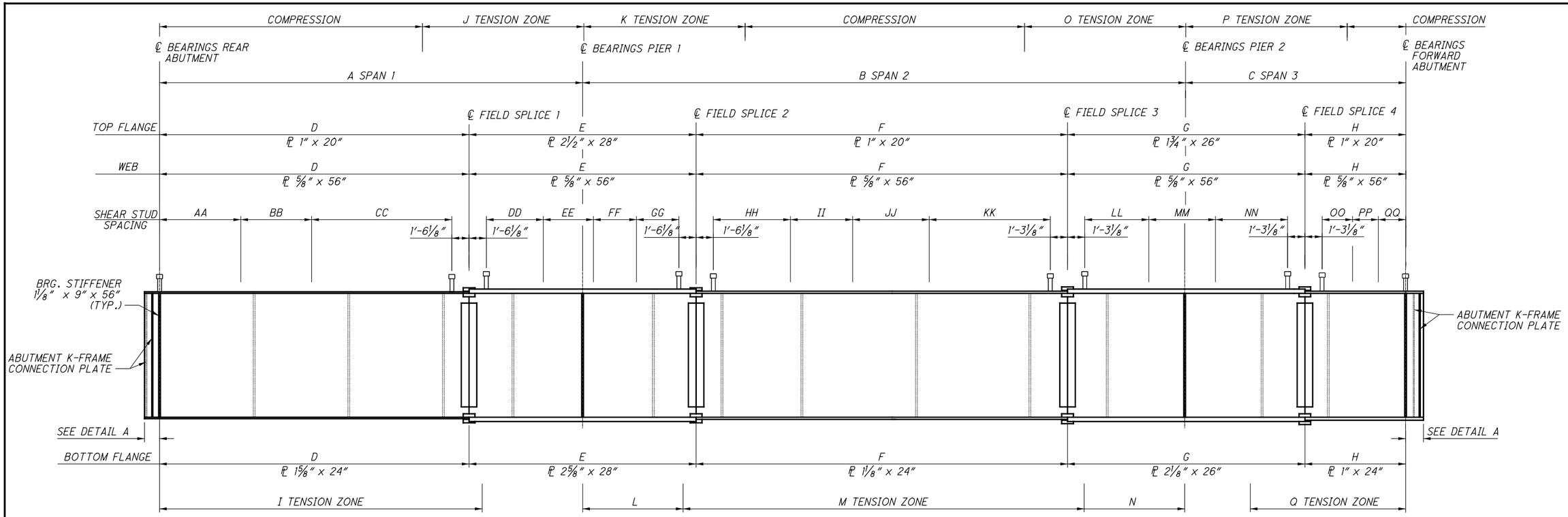

SHEAR STUD SPACING TABLE (MEASURED ALONG CENTERLINE GIRDER)

GIRDER	AA	BB	CC	DD	EE	FF	GG	HH	II	JJ	KK
G1	52 SPA. @ 10"	1 SPA. @ 9 3/16"	38 SPA. @ 1'-0"	11 SPA. @ 1'-1"	17 SPA. @ 11"	1 SPA. @ 3 5/16"	20 SPA. @ 1'-2"	5 SPA. @ 1'-0"	66 SPA. @ 1'-1"	1 SPA. @ 10 5/16"	11 SPA. @ 11"
G2	67 SPA. @ 8"	1 SPA. @ 6 9/16"	38 SPA. @ 1'-1"	25 SPA. @ 1'-1"	NOT USED	1 SPA. @ 8 1/16"	25 SPA. @ 1'-1"	33 SPA. @ 1'-1"	NOT USED	1 SPA. @ 3 5/16"	45 SPA. @ 1'-0"
G3	63 SPA. @ 9"	1 SPA. @ 7"	40 SPA. @ 1'-2"	22 SPA. @ 1'-2"	NOT USED	1 SPA. @ 8 11/16"	26 SPA. @ 1'-1"	33 SPA. @ 1'-1"	NOT USED	1 SPA. @ 10 13/16"	40 SPA. @ 1'-0"
G4	66 SPA. @ 9"	1 SPA. @ 5 7/16"	45 SPA. @ 1'-2"	15 SPA. @ 1'-3"	NOT USED	1 SPA. @ 5 5/16"	32 SPA. @ 1'-1"	33 SPA. @ 1'-1"	NOT USED	1 SPA. @ 3 13/16"	40 SPA. @ 11"
G5	69 SPA. @ 9"	1 SPA. @ 4 5/8"	48 SPA. @ 1'-2"	13 SPA. @ 1'-3"	10 SPA. @ 1'-1"	1 SPA. @ 7 1/16"	31 SPA. @ 11"	28 SPA. @ 11"	NOT USED	1 SPA. @ 6 9/16"	43 SPA. @ 1'-0"
G6	55 SPA. @ 11"	1 SPA. @ 3 15/16"	71 SPA. @ 1'-0"	17 SPA. @ 1'-2"	NOT USED	1 SPA. @ 1'-0 1/4"	27 SPA. @ 1'-0"	5 SPA. @ 1'-0"	NOT USED	1 SPA. @ 5 5/16"	57 SPA. @ 1'-1"

SHEAR STUD SPACING TABLE (MEASURED ALONG CENTERLINE GIRDER)

GIRDER	LL	MM	NN	OO	PP	QQ
G1	28 SPA. @ 10"	1 SPA. @ 3 1/8"	22 SPA. @ 1'-0"	50 SPA. @ 1'-0"	1 SPA. @ 5 1/2"	63 SPA. @ 8"
G2	27 SPA. @ 1'-0"	1 SPA. @ 6 5/16"	17 SPA. @ 1'-2"	39 SPA. @ 1'-2"	1 SPA. @ 8 5/16"	67 SPA. @ 8"
G3	23 SPA. @ 1'-0"	1 SPA. @ 3 7/16"	22 SPA. @ 1'-1"	40 SPA. @ 1'-1"	1 SPA. @ 9 3/16"	68 SPA. @ 8"
G4	27 SPA. @ 11"	1 SPA. @ 3 1/4"	22 SPA. @ 1'-1"	39 SPA. @ 1'-1"	1 SPA. @ 9 7/16"	74 SPA. @ 7"
G5	29 SPA. @ 1'-0"	1 SPA. @ 6 3/16"	15 SPA. @ 1'-2"	39 SPA. @ 1'-2"	1 SPA. @ 4 3/8"	68 SPA. @ 7"
G6	18 SPA. @ 1'-1"	1 SPA. @ 5"	30 SPA. @ 10"	43 SPA. @ 11"	1 SPA. @ 3 1/2"	62 SPA. @ 9"

ABUTMENT K-FRAME CONNECTION PLATE

	R.A.		F.A.	
GIRDER	R	S	R	S
G1	8"	7½"	8"	10 5/16"
G2	8"	7 9/16"	8"	10⅜"
G3	8"	7 9/16"	8"	10½"
G4	8"	7⅝"	8"	10 9/16"
G5	8"	7 11/16"	8"	10 11/16"
G6	8"	7 11/16"	8"	10 13/16"

GIRDER DIMENSION TABLE (MEASURED ALONG CENTERLINE OF GIRDER)

GIRDER	A	B	C	D	E	F	G	H
G1	109'-6¾"	141'-8"	118'-6 ¾"	83'-7 5/16"	54'-1 9/16"	90'-2 9/16"	48'-1⅜"	93'-8⅝"
G2	116'-11 1/16"	137'-8 ¼"	116'-11 ¼"	87'-10 11/16"	57'-10 5/16"	83'-9 9/16"	49'-10 9/16"	92'-1 1/16"
G3	124'-5 1/16"	133'-7 9/16"	115'-3 9/16"	96'-0⅛"	57'-6 15/16"	79'-5 1/16"	49'-7 11/16"	90'-8 5/16"
G4	132'-1 3/16"	129'-5 13/16"	113'-7 5/8"	103'-11 9/16"	56'-10 9/16"	75'-6 1/16"	51'-4½"	87'-5 9/16"
G5	139'-10 ½"	125'-2 ⅞"	111'-11 7/16"	109'-7¾"	59'-1 5/16"	71'-11 3/16"	49'-6 1/16"	86'-9½"
G6	147'-10 ⅛"	120'-10 13/16"	110'-3"	123'-3 1/16"	50'-10½"	69'-11 9/16"	47'-5¼"	87'-5⅝"

TENSION ZONE TABLE (MEASURED ALONG CENTERLINE OF GIRDER)

GIRDER	I	J	K	L	M	N	O	P	Q
G1	86'-0"	44'-0"	49'-0"	26'-0"	91'-0"	25'-0"	44'-0"	41'-0"	92'-0"
G2	94'-0"	47'-0"	49'-0"	22'-0"	94'-0"	21'-0"	48'-0"	41'-0"	94'-0"
G3	100'-0"	45'-0"	52'-0"	24'-0"	89'-0"	20'-0"	47'-0"	41'-0"	92'-0"
G4	104'-0"	44'-0"	51'-0"	24'-0"	86'-0"	19'-0"	43'-0"	41'-0"	91'-0"
G5	110'-0"	44'-0"	51'-0"	24'-0"	83'-0"	17'-0"	42'-0"	40'-0"	89'-0"
G6	112'-0"	47'-0"	46'-0"	26'-0"	75'-0"	20'-0"	42'-0"	37'-0"	87'-0"

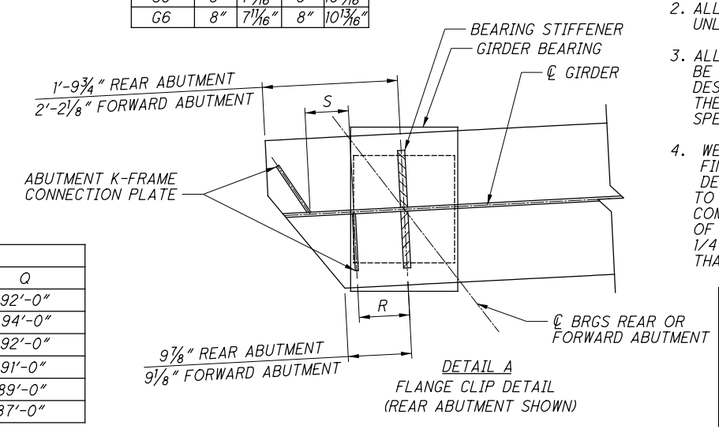

DETAIL A
FLANGE CLIP DETAIL
(REAR ABUTMENT SHOWN)

NOTES :

1. SEE FRAMING PLAN SHEET FOR ADDITIONAL INFORMATION
2. ALL SPLICE MATERIAL IS ASTM A709 GRADE (50W) UNLESS NOTED OTHERWISE.
3. ALL FLANGE, WEB, AND FIELD SPLICE PLATES SHALL BE DESIGNATED "CVN". WHERE A SHAPE OR PLATE IS DESIGNATED (CVN), FURNISH MATERIAL THAT MEETS THE MINIMUM NOTCH TOUGHNESS REQUIREMENTS AS SPECIFIED IN 711.01.
4. WELD ATTACHMENT OF SUPPORTS FOR CONCRETE DECK FINISHING MACHINE TO AREAS OF THE FASCIA STRINGER DESIGNATED "COMPRESSION". DO NOT WELD ATTACHMENTS TO AREAS DESIGNATED "TENSION". FILLET WELDS TO COMPRESSION FLANGES SHALL BE AT LEAST 1" FROM EDGE OF FLANGE, BE NO MORE THAN 2" LONG, AND BE AT LEAST 1/4" FOR THICKNESSES UP TO 3/4" OR 5/16" FOR GREATER THAN 3/4" THICK.

NO.	DATE	DESCRIPTION
0	2019-03-13	RFC

ISSUE RECORD

DESIGN AGENCY
Michael Baker INTERNATIONAL
1111 SUPERIOR AVE E., SUITE 2300, CLEVELAND, OH 44114

DESIGNED	DRAWN	REVIEWED	DATE
ETB	ETB	JWB	3/01/19
CHECKED	REVISED	STRUCTURE FILE NUMBER	
JCC		1801518	

RECORD PLANS

GIRDER ELEVATION
CUY-010-1978R
OH-10 EASTBOUND OVER GCRTA BLUE AND GREEN LINES

RECORD PLANS

CUY-IR490/SR010-2.09/19.28
PID No. 96833

RECORD PLANS

BU-19 - GCRTA BLUE/GREEN BRIDGES & CATENARY MODIFICATIONS
...\Sheets\010_1978R_SD402.dgn 6/27/2019 4:55:25 PM Christopher Lemley

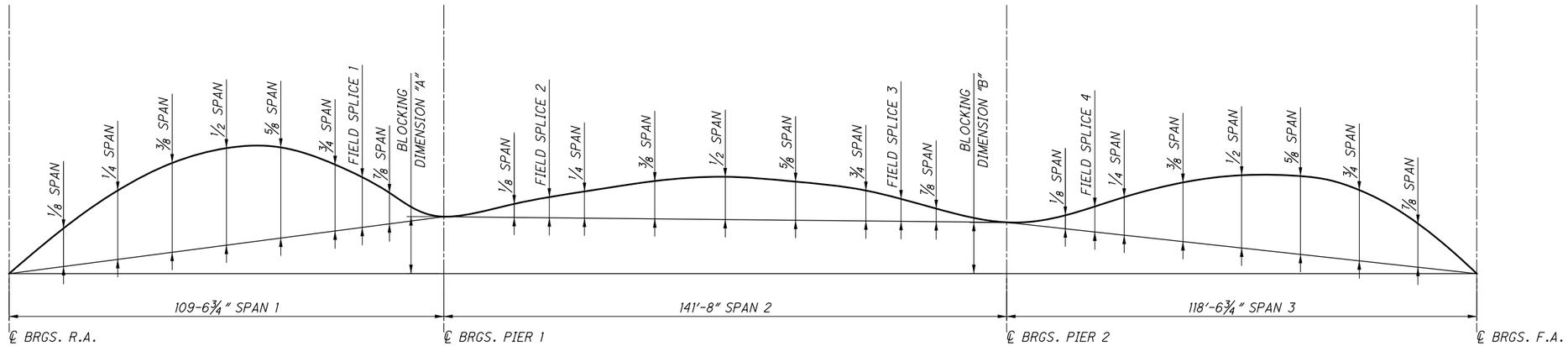

BLOCKING DIMENSIONS	
DIM. "A"	DIM. "B"
20 1/2 "	29 3/4 "

DEFLECTION AND CAMBER (INCHES) - GIRDER 1										
SPAN 1										
CAMBER DESCRIPTION	℄ BRGS R.A.	1/8 SPAN	1/4 SPAN	3/8 SPAN	1/2 SPAN	5/8 SPAN	3/4 SPAN	FIELD SPLICE 1	7/8 SPAN	℄ BRGS PIER 1
DEFLECTION DUE TO WEIGHT OF STEEL	0	1/8	1/4	5/16	1/4	3/16	1/8	1/8	1/16	0
DEFLECTION DUE TO REMAINING DEAD LOAD	0	5/8	1 1/16	1 1/4	1 3/16	15/16	9/16	1/2	3/16	0
GEOMETRIC CORRECTION	0	0	0	0	0	0	0	0	0	0
REQUIRED SHOP CAMBER	0	3/4	1 5/16	1 9/16	1 1/2	1 1/8	11/16	5/8	1/4	0

DEFLECTION AND CAMBER (INCHES) - GIRDER 1											
SPAN 2											
CAMBER DESCRIPTION	℄ BRGS PIER 1	1/8 SPAN	FIELD SPLICE 2	1/4 SPAN	3/8 SPAN	1/2 SPAN	5/8 SPAN	3/4 SPAN	FIELD SPLICE 3	7/8 SPAN	℄ BRGS PIER 2
DEFLECTION DUE TO WEIGHT OF STEEL	0	1/16	1/8	1/8	1/4	5/16	1/4	1/8	1/16	1/16	0
DEFLECTION DUE TO REMAINING DEAD LOAD	0	5/16	9/16	13/16	1 3/8	1 5/8	1 7/16	15/16	1/2	5/16	0
GEOMETRIC CORRECTION	0	2 1/8	3 7/16	4 3/16	5 1/2	6 1/16	5 3/4	4 5/8	3 7/16	2 3/4	0
REQUIRED SHOP CAMBER	0	2 1/2	4 1/8	5 3/16	7 1/8	8	7 7/16	5 11/16	4	3 1/16	0

DEFLECTION AND CAMBER (INCHES) - GIRDER 1											
SPAN 3											
CAMBER DESCRIPTION	℄ BRGS PIER 2	1/8 SPAN	FIELD SPLICE 4	1/4 SPAN	3/8 SPAN	1/2 SPAN	5/8 SPAN	3/4 SPAN	7/8 SPAN	℄ BRGS F.A.	
DEFLECTION DUE TO WEIGHT OF STEEL	0	1/16	1/8	3/16	5/16	7/16	7/16	3/8	3/16	0	
DEFLECTION DUE TO REMAINING DEAD LOAD	0	3/8	3/4	15/16	1 9/16	2 1/16	2 3/16	1 7/8	1 1/8	0	
GEOMETRIC CORRECTION	0	1 13/16	2 11/16	3	3 11/16	3 3/4	3 1/4	2 1/4	1 1/8	0	
REQUIRED SHOP CAMBER	0	2 3/16	3 9/16	4 1/8	5 9/16	6 1/4	5 7/8	4 1/2	2 7/16	0	

NOTES:

1. SEE SHEET 18/50 FOR GIRDER ELEVATIONS
2. GEOMETRIC CORRECTION SHOWN IS ADJUSTMENT DUE TO VERTICAL CURVE
3. HEAT CURVING IS NOT PERMITTED.

NO.	DATE	DESCRIPTION
0	2019-03-13	RFC

ISSUE RECORD

DESIGN AGENCY
Michael Baker INTERNATIONAL
1111 SUPERIOR AVE E., SUITE 2300, CLEVELAND, OH 44114

DESIGNED	DRAWN	REVIEWED	DATE
ETB	EKW	JWB	3/01/19
CHECKED	REVISED	STRUCTURE FILE NUMBER	
MKB		1801518	

RECORD PLANS

DEFLECTION AND CAMBER TABLE (1 OF 6)
CUY-010-1978R
OH-10 EASTBOUND OVER GCRTA BLUE AND GREEN LINES

RECORD PLANS

CUY-IR490/SR010-2.09/19.28
PID No. 96833

RECORD PLANS

BU-19 - GCRTA BLUE/GREEN BRIDGES & CATENARY MODIFICATIONS
...\Sheets\010_1978R_SS401.dgn 6/27/2019 4:55:34 PM Christopher.Lemley

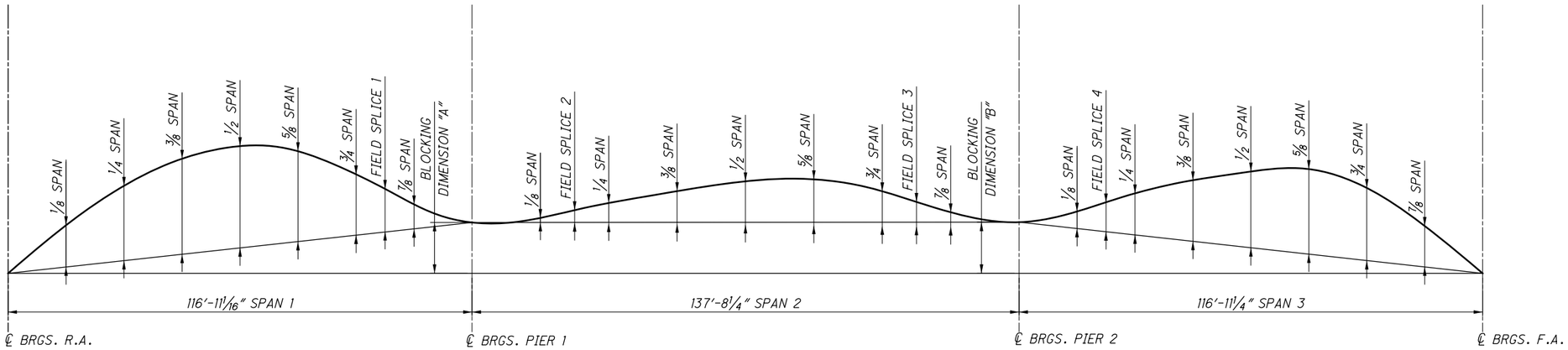

BLOCKING DIMENSIONS	
DIM. "A"	DIM. "B"
23 1/2 "	30 1/4 "

DEFLECTION AND CAMBER (INCHES) - GIRDER 2										
SPAN 1										
CAMBER DESCRIPTION	℄ BRGS R.A.	1/8 SPAN	1/4 SPAN	3/8 SPAN	1/2 SPAN	5/8 SPAN	3/4 SPAN	FIELD SPLICE 1	7/8 SPAN	℄ BRGS PIER 1
DEFLECTION DUE TO WEIGHT OF STEEL	0	3/16	5/16	3/8	3/8	5/16	3/16	3/16	1/16	0
DEFLECTION DUE TO REMAINING DEAD LOAD	0	11/16	1 1/8	1 3/8	1 5/16	1	9/16	9/16	1/4	0
GEOMETRIC CORRECTION	0	0	0	0	0	0	0	0	0	0
REQUIRED SHOP CAMBER	0	13/16	1 7/16	1 3/4	1 5/8	1 1/4	3/4	3/4	5/16	0

DEFLECTION AND CAMBER (INCHES) - GIRDER 2											
SPAN 2											
CAMBER DESCRIPTION	℄ BRGS PIER 1	1/8 SPAN	FIELD SPLICE 2	1/4 SPAN	3/8 SPAN	1/2 SPAN	5/8 SPAN	3/4 SPAN	FIELD SPLICE 3	7/8 SPAN	℄ BRGS PIER 2
DEFLECTION DUE TO WEIGHT OF STEEL	0	1/16	1/16	1/8	3/16	1/4	3/16	1/8	1/16	1/16	0
DEFLECTION DUE TO REMAINING DEAD LOAD	0	3/16	7/16	9/16	15/16	1 1/8	1	9/16	3/8	3/16	0
GEOMETRIC CORRECTION	0	2 9/16	4	4 1/2	5 11/16	6 1/8	5 3/4	4 5/8	3 5/8	2 11/16	0
REQUIRED SHOP CAMBER	0	2 13/16	4 1/2	5 3/16	6 7/8	7 7/16	6 15/16	5 5/16	4 1/8	2 15/16	0

DEFLECTION AND CAMBER (INCHES) - GIRDER 2										
SPAN 3										
CAMBER DESCRIPTION	℄ BRGS PIER 2	1/8 SPAN	FIELD SPLICE 4	1/4 SPAN	3/8 SPAN	1/2 SPAN	5/8 SPAN	3/4 SPAN	7/8 SPAN	℄ BRGS F.A.
DEFLECTION DUE TO WEIGHT OF STEEL	0	1/16	1/8	3/16	5/16	3/8	3/8	5/16	3/16	0
DEFLECTION DUE TO REMAINING DEAD LOAD	0	5/16	5/8	3/4	1 1/4	1 5/8	1 5/8	1 3/8	3/4	0
GEOMETRIC CORRECTION	0	1 5/8	2 3/8	2 11/16	3 1/8	3 1/16	2 1/2	1 5/8	13/16	0
REQUIRED SHOP CAMBER	0	2	3 1/8	3 5/8	4 11/16	5 1/16	4 1/2	3 5/16	1 3/4	0

NOTES:

1. SEE SHEET 18/50 FOR GIRDER ELEVATIONS
2. GEOMETRIC CORRECTION SHOWN IS ADJUSTMENT DUE TO VERTICAL CURVE
3. HEAT CURVING IS NOT PERMITTED.

NO.	DATE	DESCRIPTION
0	2019-03-13	RFC

ISSUE RECORD

DESIGN AGENCY
Michael Baker INTERNATIONAL
1111 SUPERIOR AVE E., SUITE 2300, CLEVELAND, OH 44114

DESIGNED	DRAWN	REVIEWED	DATE
ETB	EKW	JWB	3/01/19
CHECKED	REVISED	STRUCTURE FILE NUMBER	
MKB		1801518	

RECORD PLANS

DEFLECTION AND CAMBER TABLE (2 OF 6)
CUY-010-1978R
OH-10 EASTBOUND OVER GCRTA BLUE AND GREEN LINES

RECORD PLANS

CUY-IR490/SR010-2.09/19.28
PID No. 96833

RECORD PLANS

BU-19 - GCRTA BLUE/GREEN BRIDGES & CATENARY MODIFICATIONS
...\Sheets\010_1978R_SS402.dgn 6/27/2019 4:55:45 PM Christopher.Lemley

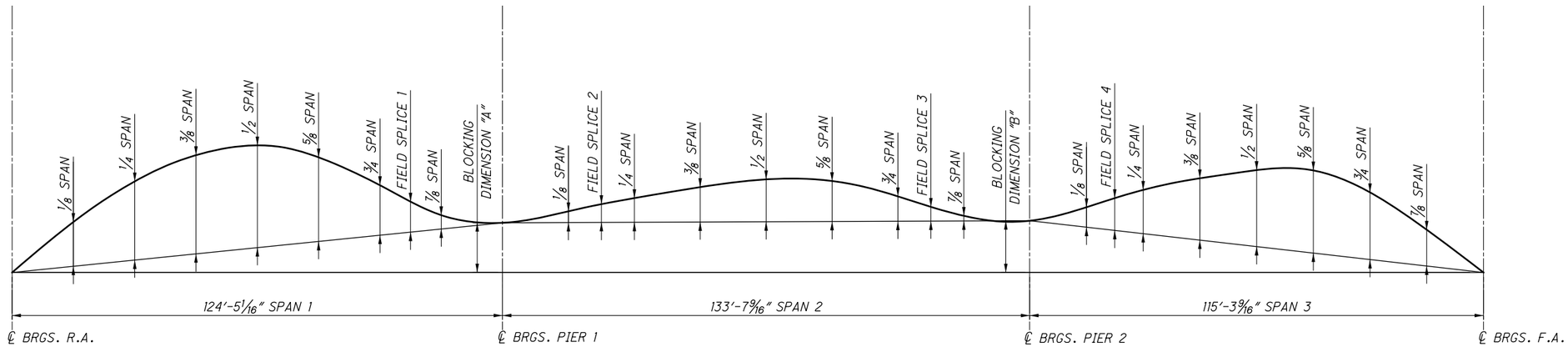

BLOCKING DIMENSIONS	
DIM. "A"	DIM. "B"
26 3/4 ''	30 7/16''

DEFLECTION AND CAMBER (INCHES) - GIRDER 3										
SPAN 1										
CAMBER DESCRIPTION	℄ BRGS R.A.	1/8 SPAN	1/4 SPAN	3/8 SPAN	1/2 SPAN	5/8 SPAN	3/4 SPAN	FIELD SPLICE 1	7/8 SPAN	℄ BRGS PIER 1
DEFLECTION DUE TO WEIGHT OF STEEL	0	1/4	7/16	1/2	1/2	3/8	1/4	1/4	1/8	0
DEFLECTION DUE TO REMAINING DEAD LOAD	0	7/8	1 1/2	1 13/16	1 3/4	1 3/8	13/16	3/4	5/16	0
GEOMETRIC CORRECTION	0	0	0	0	0	0	0	0	0	0
REQUIRED SHOP CAMBER	0	1 1/8	1 15/16	2 5/16	2 1/4	1 3/4	1 1/8	1	1/2	0

DEFLECTION AND CAMBER (INCHES) - GIRDER 3											
SPAN 2											
CAMBER DESCRIPTION	℄ BRGS PIER 1	1/8 SPAN	FIELD SPLICE 2	1/4 SPAN	3/8 SPAN	1/2 SPAN	5/8 SPAN	3/4 SPAN	FIELD SPLICE 3	7/8 SPAN	℄ BRGS PIER 2
DEFLECTION DUE TO WEIGHT OF STEEL	0	1/16	1/16	1/16	3/16	3/16	3/16	1/8	1/16	1/16	0
DEFLECTION DUE TO REMAINING DEAD LOAD	0	1/8	5/16	3/8	11/16	7/8	13/16	1/2	5/16	3/16	0
GEOMETRIC CORRECTION	0	2 9/16	4	4 7/16	5 1/2	5 7/8	5 1/2	4 7/16	3 9/16	2 9/16	0
REQUIRED SHOP CAMBER	0	2 11/16	4 3/8	4 7/8	6 3/8	6 15/16	6 1/2	5 1/16	4	2 13/16	0

DEFLECTION AND CAMBER (INCHES) - GIRDER 3										
SPAN 3										
CAMBER DESCRIPTION	℄ BRGS PIER 2	1/8 SPAN	FIELD SPLICE 4	1/4 SPAN	3/8 SPAN	1/2 SPAN	5/8 SPAN	3/4 SPAN	7/8 SPAN	℄ BRGS F.A.
DEFLECTION DUE TO WEIGHT OF STEEL	0	1/16	1/8	3/16	1/4	3/8	3/8	5/16	3/16	0
DEFLECTION DUE TO REMAINING DEAD LOAD	0	1/4	1/2	5/8	1 1/8	1 1/2	1 9/16	1 5/16	3/4	0
GEOMETRIC CORRECTION	0	1 3/8	2 1/16	2 1/4	2 1/2	2 1/4	1 11/16	1 1/8	9/16	0
REQUIRED SHOP CAMBER	0	1 11/16	2 11/16	3 1/16	3 15/16	4 1/8	3 5/8	2 3/4	1 1/2	0

NOTES:

1. SEE SHEET 18/50 FOR GIRDER ELEVATIONS
2. GEOMETRIC CORRECTION SHOWN IS ADJUSTMENT DUE TO VERTICAL CURVE
3. HEAT CURVING IS NOT PERMITTED.

NO.	DATE	DESCRIPTION
0	2019-03-13	RFC

ISSUE RECORD

DESIGN AGENCY
Michael Baker INTERNATIONAL
1111 SUPERIOR AVE E., SUITE 2300, CLEVELAND, OH 44114

DESIGNED	DRAWN	REVIEWED	DATE
ETB	EKW	JWB	3/01/19
CHECKED	REVISED	STRUCTURE FILE NUMBER	
MKB		1801518	

RECORD PLANS

DEFLECTION AND CAMBER TABLE (3 OF 6)
CUY-010-1978R
OH-10 EASTBOUND OVER GCRTA BLUE AND GREEN LINES

RECORD PLANS

CUY-IR490/SR010-2.09/19.28
PID No. 96833

BU-19 - GCRTA BLUE/GREEN BRIDGES & CATENARY MODIFICATIONS
...\Sheets\010_1978R_SS403.dgn 6/27/2019 4:56:02 PM Christopher Lemley

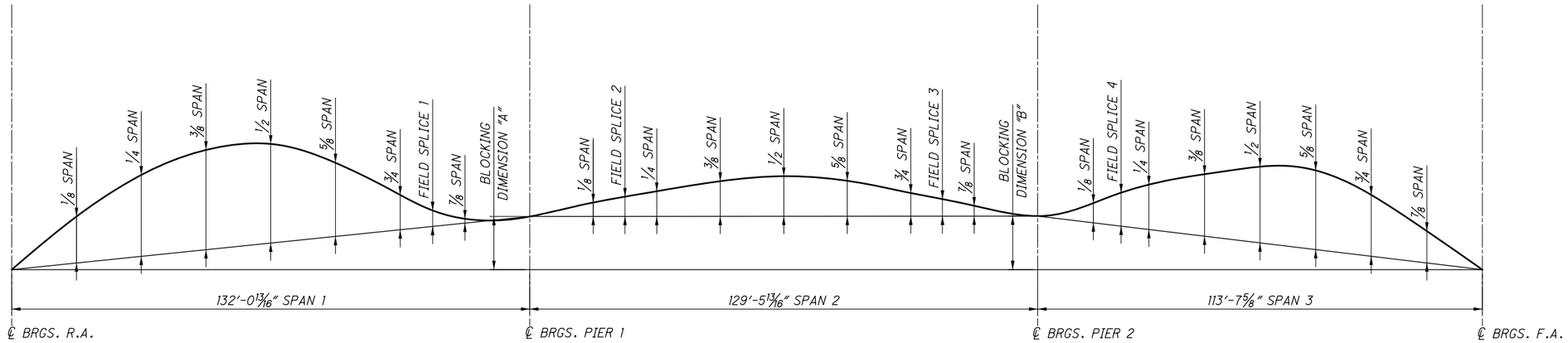

BLOCKING DIMENSIONS	
DIM. "A"	DIM. "B"
29 13/16''	30 5/16''

DEFLECTION AND CAMBER (INCHES) - GIRDER 4										
SPAN 1										
CAMBER DESCRIPTION	℄ BRGS R.A.	1/8 SPAN	1/4 SPAN	3/8 SPAN	1/2 SPAN	5/8 SPAN	3/4 SPAN	FIELD SPLICE 1	7/8 SPAN	℄ BRGS PIER 1
DEFLECTION DUE TO WEIGHT OF STEEL	0	5/16	1/2	5/8	5/8	1/2	5/16	1/4	1/8	0
DEFLECTION DUE TO REMAINING DEAD LOAD	0	1 3/16	2 1/8	2 9/16	2 1/2	2	1 3/16	1	1/2	0
GEOMETRIC CORRECTION	0	1/16	1/8	3/16	1/4	5/16	7/16	7/16	7/16	0
REQUIRED SHOP CAMBER	0	1 9/16	2 13/16	3 7/16	3 3/8	2 13/16	1 7/8	1 5/8	1 1/16	0

DEFLECTION AND CAMBER (INCHES) - GIRDER 4											
SPAN 2											
CAMBER DESCRIPTION	℄ BRGS PIER 1	1/8 SPAN	FIELD SPLICE 2	1/4 SPAN	3/8 SPAN	1/2 SPAN	5/8 SPAN	3/4 SPAN	FIELD SPLICE 3	7/8 SPAN	℄ BRGS PIER 2
DEFLECTION DUE TO WEIGHT OF STEEL	0	0	1/16	1/16	1/8	3/16	1/8	1/8	1/16	1/16	0
DEFLECTION DUE TO REMAINING DEAD LOAD	0	1/16	1/4	5/16	5/8	13/16	3/4	1/2	3/8	3/16	0
GEOMETRIC CORRECTION	0	2 7/16	3 7/8	4 3/16	5 1/4	5 9/16	5 1/4	4 3/16	3 1/2	2 7/16	0
REQUIRED SHOP CAMBER	0	2 9/16	4 3/16	4 9/16	6	6 9/16	6 1/8	4 13/16	3 15/16	2 11/16	0

DEFLECTION AND CAMBER (INCHES) - GIRDER 4										
SPAN 3										
CAMBER DESCRIPTION	℄ BRGS PIER 2	1/8 SPAN	FIELD SPLICE 4	1/4 SPAN	3/8 SPAN	1/2 SPAN	5/8 SPAN	3/4 SPAN	7/8 SPAN	℄ BRGS F.A.
DEFLECTION DUE TO WEIGHT OF STEEL	0	1/16	1/8	3/16	1/4	5/16	3/8	5/16	3/16	0
DEFLECTION DUE TO REMAINING DEAD LOAD	0	1/4	5/8	11/16	1 3/16	1 9/16	1 5/8	1 3/8	13/16	0
GEOMETRIC CORRECTION	0	1 1/8	1 11/16	1 11/16	1 3/4	1 7/16	1 1/16	11/16	3/8	0
REQUIRED SHOP CAMBER	0	1 7/16	2 7/16	2 9/16	3 3/16	3 5/16	3 1/16	2 3/8	1 5/16	0

NOTES:

1. SEE SHEET 18/50 FOR GIRDER ELEVATIONS
2. GEOMETRIC CORRECTION SHOWN IS ADJUSTMENT DUE TO VERTICAL CURVE
3. HEAT CURVING IS NOT PERMITTED.

NO.	DATE	DESCRIPTION
0	2019-03-13	RFC

ISSUE RECORD

DESIGN AGENCY
Michael Baker INTERNATIONAL
1111 SUPERIOR AVE E., SUITE 2300, CLEVELAND, OH 44114

DESIGNED	DRAWN	REVIEWED	DATE
ETB	EKW	JWB	3/01/19
CHECKED	REVISED	STRUCTURE FILE NUMBER	
MKB		1801518	

RECORD PLANS

DEFLECTION AND CAMBER TABLE (4 OF 6)
CUY-010-1978R
OH-10 EASTBOUND OVER GCRTA BLUE AND GREEN LINES

RECORD PLANS

CUY-IR490/SR010-2.09/19.28
PID No. 96833

RECORD PLANS

BU-19 - GCRTA BLUE/GREEN BRIDGES & CATENARY MODIFICATIONS
...\Sheets\010_1978R_SS404.dgn 6/27/2019 4:56:19 PM Christopher.Lemley

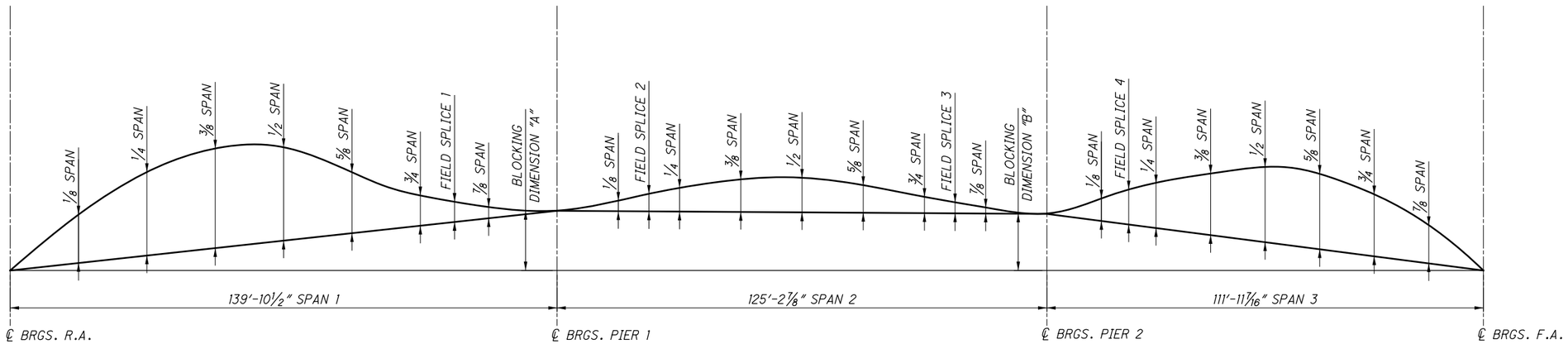

BLOCKING DIMENSIONS	
DIM. "A"	DIM. "B"
32 3/8 "	29 13/16"

DEFLECTION AND CAMBER (INCHES) - GIRDER 5										
SPAN 1										
CAMBER DESCRIPTION	℄ BRGS R.A.	1/8 SPAN	1/4 SPAN	3/8 SPAN	1/2 SPAN	5/8 SPAN	3/4 SPAN	FIELD SPLICE 1	7/8 SPAN	℄ BRGS PIER 1
DEFLECTION DUE TO WEIGHT OF STEEL	0	3/8	5/8	3/4	3/4	9/16	3/8	5/16	1/8	0
DEFLECTION DUE TO REMAINING DEAD LOAD	0	1 3/4	3 1/16	3 3/4	3 5/8	2 15/16	1 13/16	1 1/2	3/4	0
GEOMETRIC CORRECTION	0	3/16	7/16	5/8	7/8	1 1/16	1 5/16	1 5/16	1 1/16	0
REQUIRED SHOP CAMBER	0	2 5/16	4 1/8	5 1/8	5 1/4	4 9/16	3 7/16	3 1/8	1 15/16	0

DEFLECTION AND CAMBER (INCHES) - GIRDER 5											
SPAN 2											
CAMBER DESCRIPTION	℄ BRGS PIER 1	1/8 SPAN	FIELD SPLICE 2	1/4 SPAN	3/8 SPAN	1/2 SPAN	5/8 SPAN	3/4 SPAN	FIELD SPLICE 3	7/8 SPAN	℄ BRGS PIER 2
DEFLECTION DUE TO WEIGHT OF STEEL	0	0	1/16	1/16	1/8	1/8	1/8	1/16	1/16	1/16	0
DEFLECTION DUE TO REMAINING DEAD LOAD	0	1/16	1/4	5/16	5/8	13/16	13/16	1/2	3/8	3/16	0
GEOMETRIC CORRECTION	0	2 5/16	3 3/4	3 15/16	4 15/16	5 1/4	4 15/16	3 15/16	3 5/16	2 5/16	0
REQUIRED SHOP CAMBER	0	2 3/8	4 1/16	4 5/16	5 11/16	6 1/4	5 13/16	4 9/16	3 3/4	2 9/16	0

DEFLECTION AND CAMBER (INCHES) - GIRDER 5										
SPAN 3										
CAMBER DESCRIPTION	℄ BRGS PIER 2	1/8 SPAN	FIELD SPLICE 4	1/4 SPAN	3/8 SPAN	1/2 SPAN	5/8 SPAN	3/4 SPAN	7/8 SPAN	℄ BRGS F.A.
DEFLECTION DUE TO WEIGHT OF STEEL	0	1/16	1/8	1/8	1/4	5/16	5/16	1/4	1/8	0
DEFLECTION DUE TO REMAINING DEAD LOAD	0	5/16	11/16	13/16	1 5/16	1 3/4	1 13/16	1 9/16	7/8	0
GEOMETRIC CORRECTION	0	13/16	1 1/16	1 1/8	15/16	3/4	9/16	3/8	3/16	0
REQUIRED SHOP CAMBER	0	1 3/16	1 7/8	2 1/16	2 1/2	2 13/16	2 3/4	2 3/16	1 1/4	0

NOTES:

1. SEE SHEET 18/50 FOR GIRDER ELEVATIONS
2. GEOMETRIC CORRECTION SHOWN IS ADJUSTMENT DUE TO VERTICAL CURVE
3. HEAT CURVING IS NOT PERMITTED.

NO.	DATE	DESCRIPTION
0	2019-03-13	RFC

ISSUE RECORD

DESIGN AGENCY
Michael Baker INTERNATIONAL
1111 SUPERIOR AVE E., SUITE 2300, CLEVELAND, OH 44114

DESIGNED	DRAWN	REVIEWED	DATE
ETB	EKW	JWB	3/01/19
CHECKED	REVISED	STRUCTURE FILE NUMBER	
MKB		1801518	

RECORD PLANS

DEFLECTION AND CAMBER TABLE (5 OF 6)
CUY-010-1978R
OH-10 EASTBOUND OVER GCRTA BLUE AND GREEN LINES
RECORD PLANS

CUY-IR490/SR010-2.09/19.28
PID No. 96833
RECORD PLANS

BU-19 - GCRTA BLUE/GREEN BRIDGES & CATENARY MODIFICATIONS
...\Sheets\010_1978R_SS405.dgn 6/27/2019 4:56:36 PM Christopher.Lemley

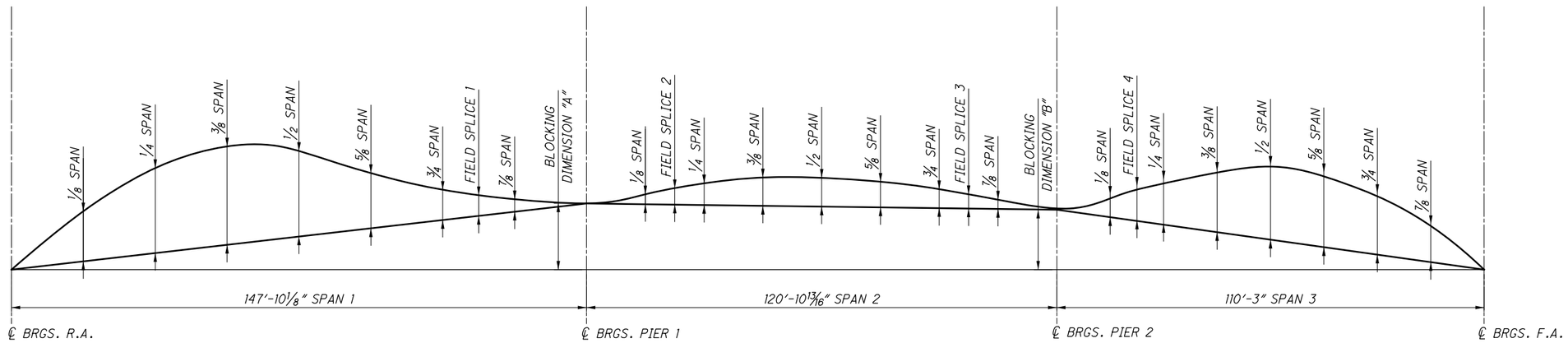

BLOCKING DIMENSIONS	
DIM. "A"	DIM. "B"
34 9/16"	28 15/16"

DEFLECTION AND CAMBER (INCHES) - GIRDER 6										
SPAN 1										
CAMBER DESCRIPTION	℄ BRGS R.A.	1/8 SPAN	1/4 SPAN	3/8 SPAN	1/2 SPAN	5/8 SPAN	3/4 SPAN	FIELD SPLICE 1	7/8 SPAN	℄ BRGS PIER 1
DEFLECTION DUE TO WEIGHT OF STEEL	0	7/16	3/4	15/16	7/8	11/16	7/16	1/4	3/16	0
DEFLECTION DUE TO REMAINING DEAD LOAD	0	2 1/2	4 3/8	5 3/16	4 15/16	3 13/16	2 1/4	1 1/4	13/16	0
GEOMETRIC CORRECTION	0	7/16	15/16	1 3/8	1 13/16	2 5/16	2 7/16	2 1/16	1 11/16	0
REQUIRED SHOP CAMBER	0	3 7/16	6 1/16	7 1/2	7 11/16	6 13/16	5 1/16	3 1/2	2 11/16	0

DEFLECTION AND CAMBER (INCHES) - GIRDER 6											
SPAN 2											
CAMBER DESCRIPTION	℄ BRGS PIER 1	1/8 SPAN	FIELD SPLICE 2	1/4 SPAN	3/8 SPAN	1/2 SPAN	5/8 SPAN	3/4 SPAN	FIELD SPLICE 3	7/8 SPAN	℄ BRGS PIER 2
DEFLECTION DUE TO WEIGHT OF STEEL	0	0	0	0	1/16	1/8	1/8	1/16	1/16	1/16	0
DEFLECTION DUE TO REMAINING DEAD LOAD	0	1/16	5/16	3/8	3/4	15/16	7/8	9/16	7/16	3/16	0
GEOMETRIC CORRECTION	0	2 3/16	3 3/8	3 11/16	4 5/8	4 15/16	4 5/8	3 11/16	3 3/16	2 3/16	0
REQUIRED SHOP CAMBER	0	2 1/4	3 11/16	4 1/8	5 7/16	6	5 5/8	4 3/8	3 11/16	2 7/16	0

DEFLECTION AND CAMBER (INCHES) - GIRDER 6											
SPAN 3											
CAMBER DESCRIPTION	℄ BRGS PIER 2	1/8 SPAN	FIELD SPLICE 4	1/4 SPAN	3/8 SPAN	1/2 SPAN	5/8 SPAN	3/4 SPAN	7/8 SPAN	℄ BRGS F.A.	
DEFLECTION DUE TO WEIGHT OF STEEL	0	1/16	1/8	1/8	3/16	1/4	5/16	1/4	1/8	0	
DEFLECTION DUE TO REMAINING DEAD LOAD	0	3/8	13/16	1	1 11/16	2 3/16	2 1/4	1 7/8	1 1/16	0	
GEOMETRIC CORRECTION	0	7/16	1/2	7/16	3/8	5/16	1/4	1/8	1/16	0	
REQUIRED SHOP CAMBER	0	15/16	1 3/8	1 5/8	2 5/16	2 3/4	2 3/4	2 1/4	1 1/4	0	

NOTES:

1. SEE SHEET 18/50 FOR GIRDER ELEVATIONS
2. GEOMETRIC CORRECTION SHOWN IS ADJUSTMENT DUE TO VERTICAL CURVE
3. HEAT CURVING IS NOT PERMITTED.

NO.	DATE	DESCRIPTION
0	2019-03-13	RFC

ISSUE RECORD

DESIGN AGENCY
Michael Baker INTERNATIONAL
1111 SUPERIOR AVE E., SUITE 2300, CLEVELAND, OH 44114

DESIGNED	DRAWN	REVIEWED	DATE
ETB	EKW	JWB	3/01/19
CHECKED	REVISED	STRUCTURE FILE NUMBER	
MKB		1801518	

RECORD PLANS

DEFLECTION AND CAMBER TABLE (6 OF 6)
CUY-010-1978R
OH-10 EASTBOUND OVER GCRTA BLUE AND GREEN LINES

RECORD PLANS

CUY-IR490/SR010-2.09/19.28
PID No. 96833

RECORD PLANS

BU-19 - GCRTA BLUE/GREEN BRIDGES & CATENARY MODIFICATIONS
...\Sheets\010_1978R_SS406.dgn 6/27/2019 4:56:53 PM Christopher.Lemley

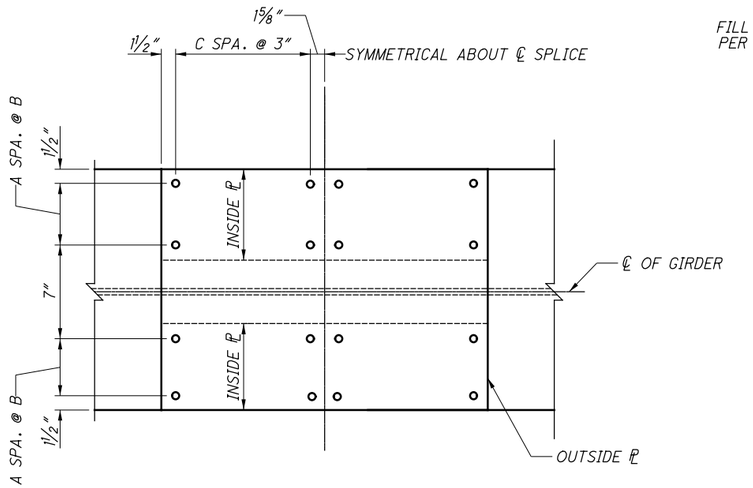

PLAN - TOP FLANGE

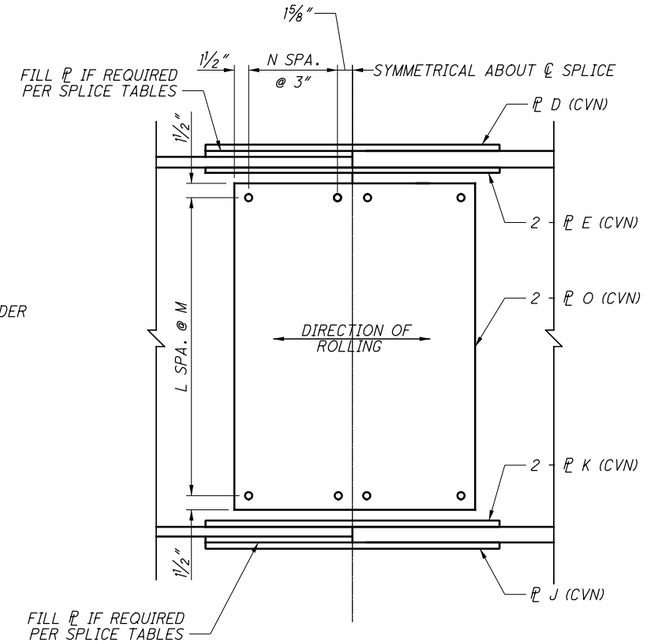

ELEVATION

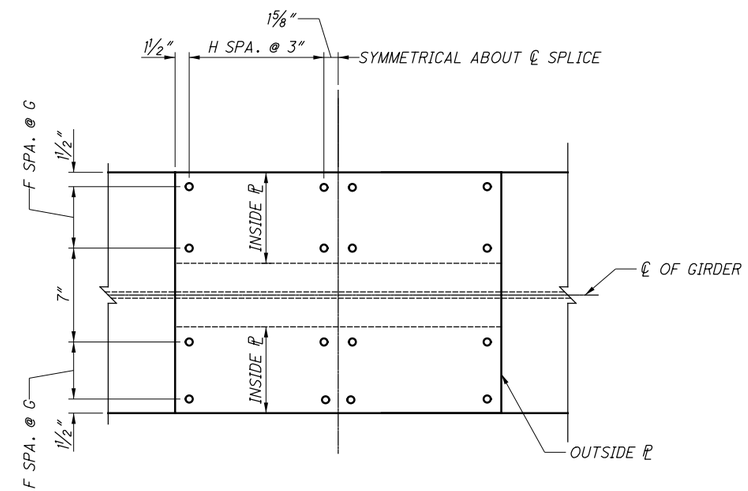

PLAN - BOTTOM FLANGE

FIELD SPLICE VARIABLE TABLE												
TOP FLANGE							BOTTOM FLANGE					
FS #	A	B	C	D	E	FILL PL	F	G	H	J	K	FILL PL
1EB	1	5	4	3/4 x 20 x 2'-6 1/4"	7/8 x 8 x 2'-6 1/4"	1 1/2 x 20 x 1'-3"	2	3 1/2	7	1 1/8 x 24 x 4'-0 1/4"	1 1/4 x 10 x 4'-0 1/4"	1 x 24 x 2'-0"
2EB	1	5	4	3/4 x 20 x 2'-6 1/4"	7/8 x 8 x 2'-6 1/4"	1 1/2 x 20 x 1'-3"	2	3 1/2	4	7/8 x 24 x 2'-6 1/4"	1 1/8 x 10 x 2'-6 1/4"	1 1/2 x 24 x 1'-3"
3EB	1	5	3	3/4 x 20 x 2'-0 1/4"	7/8 x 8 x 2'-0 1/4"	3/4 x 20 x 1'-0"	2	3 1/2	4	7/8 x 24 x 2'-6 1/4"	1 1/8 x 10 x 2'-6 1/4"	1 x 24 x 1'-3"
4EB	1	5	3	3/4 x 20 x 2'-0 1/4"	7/8 x 8 x 2'-0 1/4"	3/4 x 20 x 1'-0"	2	3 1/2	4	3/4 x 24 x 2'-6 1/4"	1 x 10 x 2'-6 1/4"	1 1/8 x 24 x 1'-3"

FIELD SPLICE VARIABLE TABLE					
WEB					
FS #	L	M	N	O	FILL PL
1EB	12	3 15/16"	3	7/16 x 24 1/4 x 4'-2 1/4"	--
2EB	14	3 3/8"	2	3/8 x 18 1/4 x 4'-2 1/4"	--
3EB	14	3 3/8"	2	3/8 x 18 1/4 x 4'-2 1/4"	--
4EB	14	3 3/8"	2	3/8 x 18 1/4 x 4'-2 1/4"	--

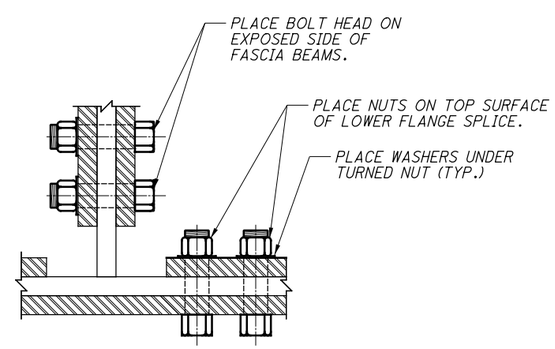

BOLTED SPLICE
PARTIAL SECTION

LEGEND

℄	CENTERLINE
DIA.	DIAMETER
FS	FIELD SPLICE
SPA.	SPACES
TYP.	TYPICAL

NOTES :

1. ALL SPLICE MATERIAL IS ASTM A709 GRADE (50W) UNLESS NOTED OTHERWISE.
2. ALL BOLTS SHOWN ARE A325, TYPE III, 1" DIAMETER, HIGH STRENGTH UNLESS NOTED OTHERWISE.
3. WHERE A SHAPE OR PLATE IS DESIGNATED (CVN), THE MATERIAL SHALL MEET SPECIFIED MINIMUM NOTCH TOUGHNESS REQUIREMENTS AS SPECIFIED IN 711.01.
4. FOR FIELD SPLICE LOCATIONS, SEE FRAMING PLAN.
5. SPLICE PLATE EDGE DISTANCES REQUIRE GAS CUT OR ROLLED EDGES.

NO.	DATE	DESCRIPTION
0	2019-03-13	RFC

ISSUE RECORD

DESIGN AGENCY
Michael Baker INTERNATIONAL
1111 SUPERIOR AVE E., SUITE 2300, CLEVELAND, OH 44114

DESIGNED	DRAWN	REVIEWED	DATE
SSW	SSW	JWB	3/01/19
CHECKED	REVISED	STRUCTURE FILE NUMBER	
ETB		1801518	

RECORD PLANS

SPLICE DETAILS
CUY-010-1978R
OH-10 EASTBOUND OVER GCRTA BLUE AND GREEN LINES

RECORD PLANS

CUY-IR490/SR010-2.09/19.28
PID No. 96833

RECORD PLANS

BU-19 - GCRTA BLUE/GREEN BRIDGES & CATENARY MODIFICATIONS
...\Sheets\010_1978R_SD403.dgn 6/27/2019 4:56:58 PM Christopher Lemley

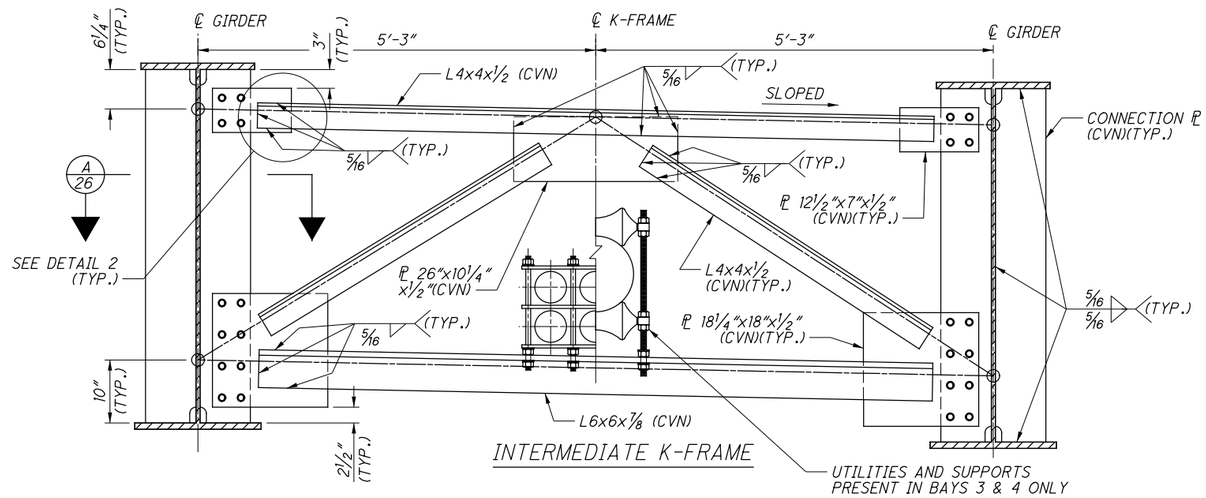

INTERMEDIATE K-FRAME

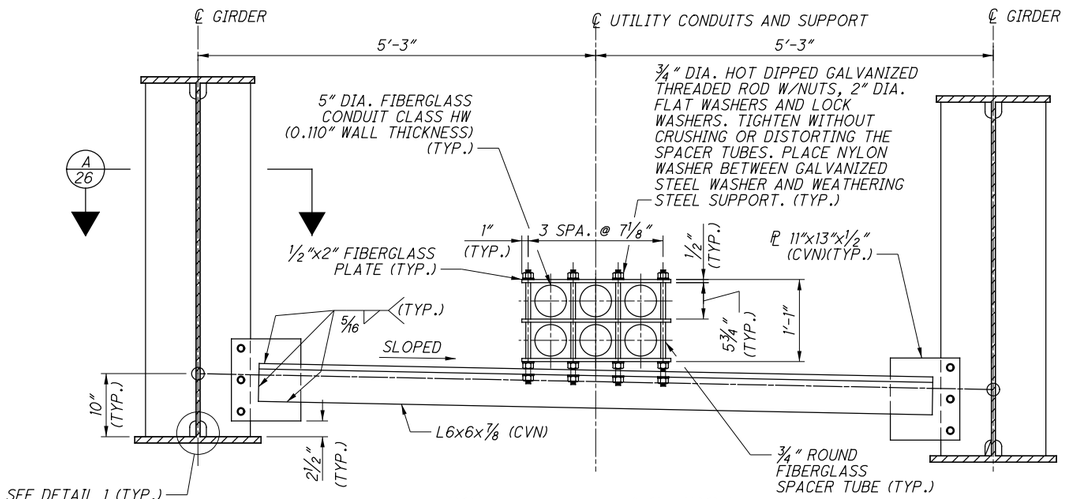

CONDUIT UTILITY SUPPORT

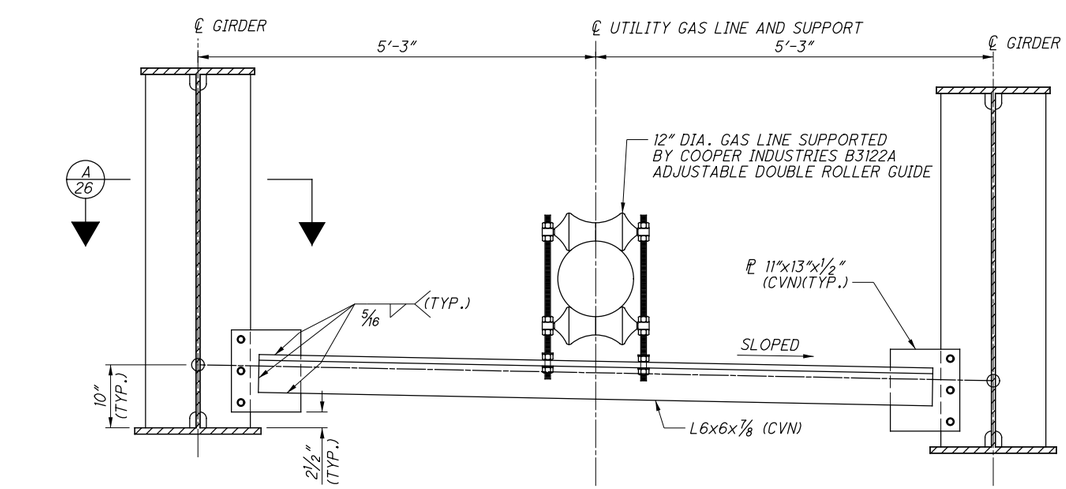

GAS LINE UTILITY SUPPORT

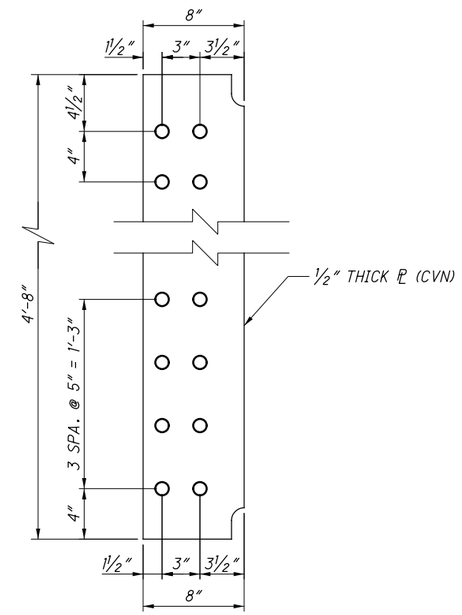

INTERMEDIATE K-FRAME CONNECTION PLATE

MEMBER SECTION	MINIMUM WELD LENGTH, L MIN
UPPER CHORD L4x4x½	4"
DIAGONAL L4x4x½	3¼"
LOWER CHORD L6x6x⅞	9½"
UTILITY SUPPORT L6x6x⅞	5"

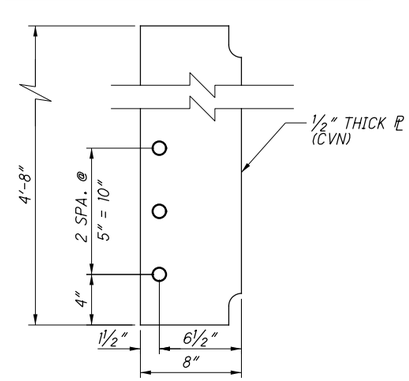

UTILITY SUPPORT CONNECTION PLATE

NOTES :

1. ALL STEEL IS ASTM 709, GRADE 50W, UNLESS NOTED OTHERWISE.
2. HIGH STRENGTH BOLTS SHALL BE 1" DIAMETER, ASTM A325, TYPE III, UNLESS NOTED OTHERWISE.
3. ALL BOLT HOLES SHALL BE 1 1/16" DIAMETER. K-FRAMES AND GIRDERS SHALL BE SHOP ASSEMBLED TO VERIFY FIT, UNLESS OTHER METHODS TO CHECK HOLE ALIGNMENT ARE APPROVED BY THE ODOT OFFICE OF MATERIALS MANAGEMENT IN ACCORDANCE WITH CMS 513.19 AND 513.24.
4. WHERE A SHAPE OR PLATE IS DESIGNATED 'CVN', FURNISH MATERIAL THAT MEETS THE MINIMUM NOTCH TOUGHNESS REQUIREMENTS AS SPECIFIED IN 711.01.
5. PREPARE FAYING SURFACES FOR INTERMEDIATE K-FRAME BOLTED CONNECTIONS TO PROVIDE CLASS B SURFACES.

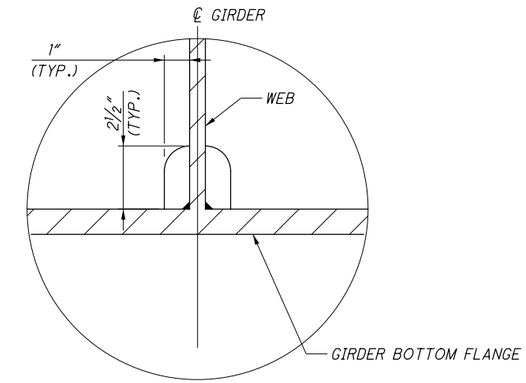

DETAIL 1

(TYP. BOTH TOP AND BOTTOM FLANGES)

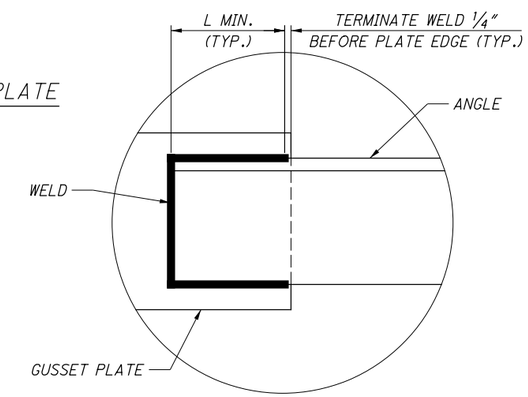

DETAIL 2

(TYP. ALL WELDED ANGLE CONNECTIONS)

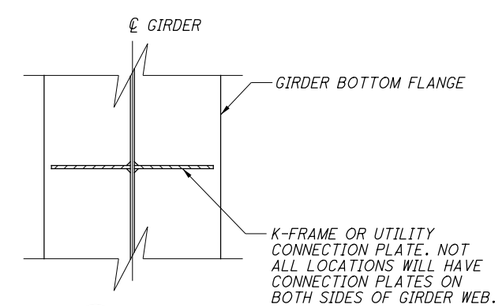

A 26 SECTION

NO.	DATE	DESCRIPTION
1	2019-05-17	DC006, DRFI005
0	2019-03-13	RFC

ISSUE RECORD

DESIGN AGENCY
Michael Baker INTERNATIONAL
1111 SUPERIOR AVE E., SUITE 2300, CLEVELAND, OH 44114

DESIGNED	DRAWN	REVIEWED	DATE
ETB	ETB	JWB	3/01/19
CHECKED	REVISED	STRUCTURE FILE NUMBER	
MKB		1801518	

RECORD PLANS

INTERMEDIATE K-FRAME AND UTILITY SUPPORT DETAILS

CUY-010-1978R

OH-10 EASTBOUND OVER GCRTA BLUE AND GREEN LINES

RECORD PLANS

CUY-IR490/SR010-2.09/19.28

PID No. 96833

RECORD PLANS

26/50

31/110

BU-19 - GCRTA BLUE/GREEN BRIDGES & CATENARY MODIFICATIONS

...\Sheets\010_1978R_SD404.dgn 6/27/2019 4:57:04 PM Christopher Lemley

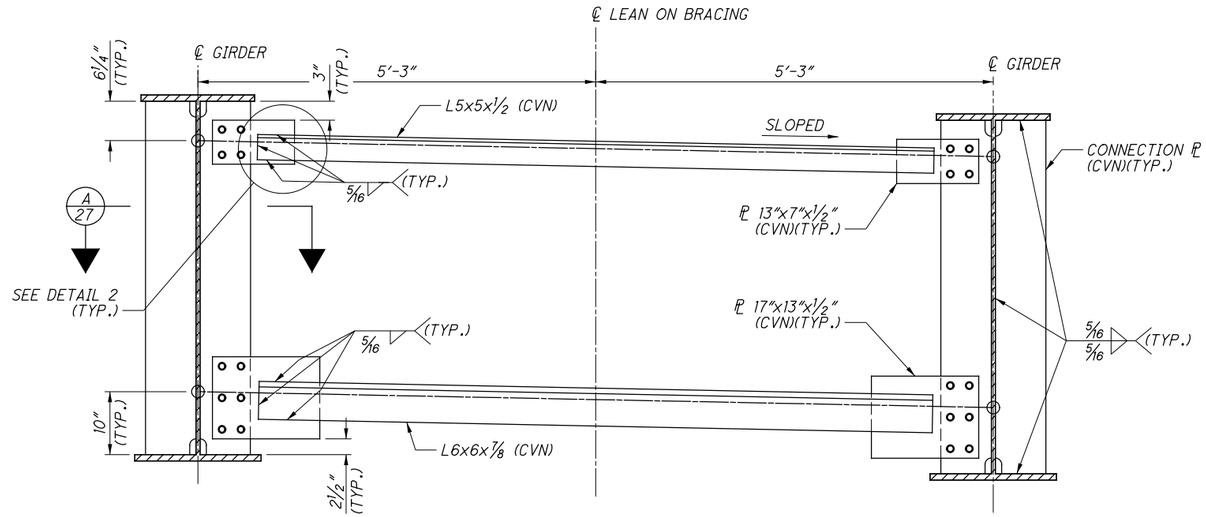

LEAN ON BRACING (BAY 2)

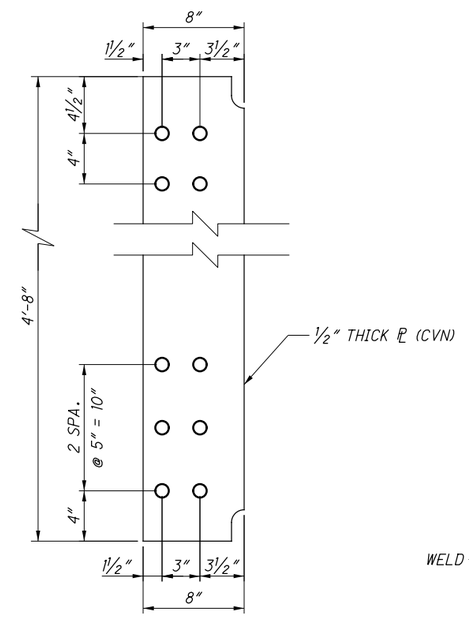

LEAN ON BRACING CONNECTION PLATE

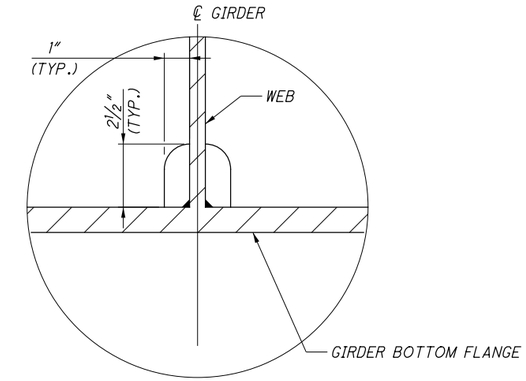

DETAIL 1

(TYP. BOTH TOP AND BOTTOM FLANGES)

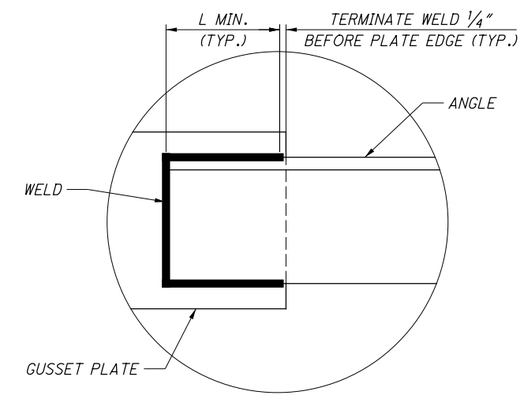

DETAIL 2

(TYP. ALL WELDED ANGLE CONNECTIONS)

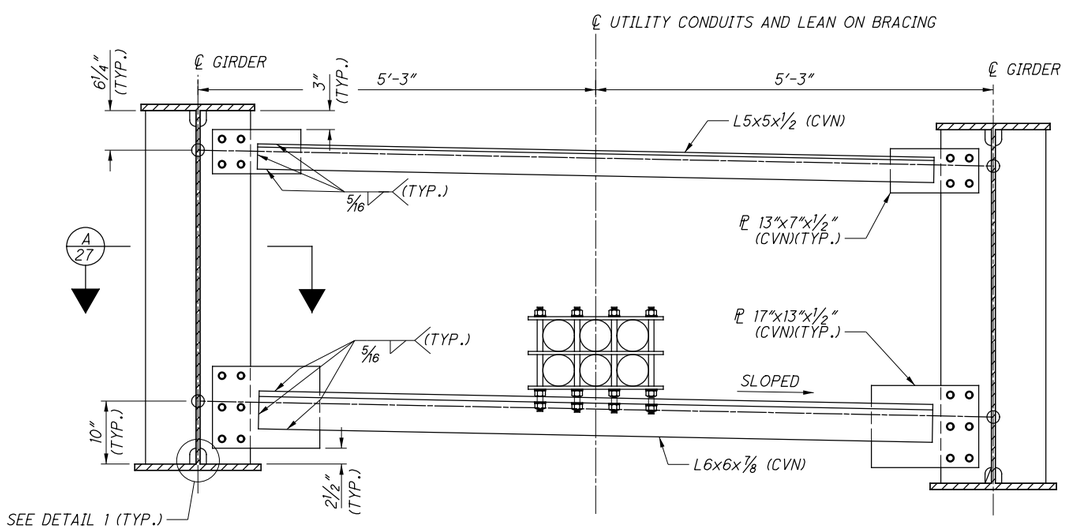

LEAN ON BRACING (BAY 4)

MEMBER SECTION	MINIMUM WELD LENGTH, L MIN
UPPER CHORD L5x5x½	4"
LOWER CHORD L6x6x⅞	8½"
UTILITY SUPPORT L6x6x⅞	8½"

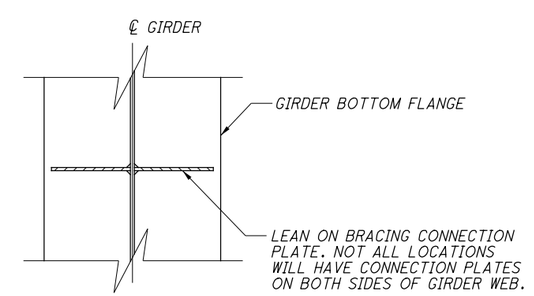

A 27 SECTION

NOTES :

1. ALL STEEL IS ASTM 709, GRADE 50W, UNLESS NOTED OTHERWISE.
2. HIGH STRENGTH BOLTS SHALL BE 1" DIAMETER, ASTM A325, TYPE III, UNLESS NOTED OTHERWISE.
3. ALL BOLT HOLES SHALL BE 1 1/16" DIAMETER. BRACING AND GIRDERS SHALL BE SHOP ASSEMBLED TO VERIFY FIT, UNLESS OTHER METHODS TO CHECK HOLE ALIGNMENT ARE APPROVED BY THE ODOT OFFICE OF MATERIALS MANAGEMENT IN ACCORDANCE WITH CMS 513.19 AND 513.24.
4. WHERE A SHAPE OR PLATE IS DESIGNATED 'CVN', FURNISH MATERIAL THAT MEETS THE MINIMUM NOTCH TOUGHNESS REQUIREMENTS AS SPECIFIED IN 711.01.
5. PREPARE FAYING SURFACES FOR LEAN ON BRACING BOLTED CONNECTIONS TO PROVIDE CLASS B SURFACES.

NO.	DATE	DESCRIPTION
0	2019-03-13	RFC

ISSUE RECORD

DESIGN AGENCY
Michael Baker INTERNATIONAL
1111 SUPERIOR AVE E., SUITE 2300, CLEVELAND, OH 44114

DESIGNED	DRAWN	REVIEWED	DATE
ETB	ETB	JWB	3/01/19
CHECKED	REVISED	STRUCTURE FILE NUMBER	
MKB		1801518	

RECORD PLANS

LEAN ON BRACING DETAILS
CUY-010-1978R
OH-10 EASTBOUND OVER GCRTA BLUE AND GREEN LINES

RECORD PLANS

CUY-IR490/SR010-2.09/19.28
PID No. 96833

RECORD PLANS

BU-19 - GCRTA BLUE/GREEN BRIDGES & CATENARY MODIFICATIONS
...\Sheets\010_1978R_SD412.dgn 6/27/2019 4:57:11 PM Christopher Lemley

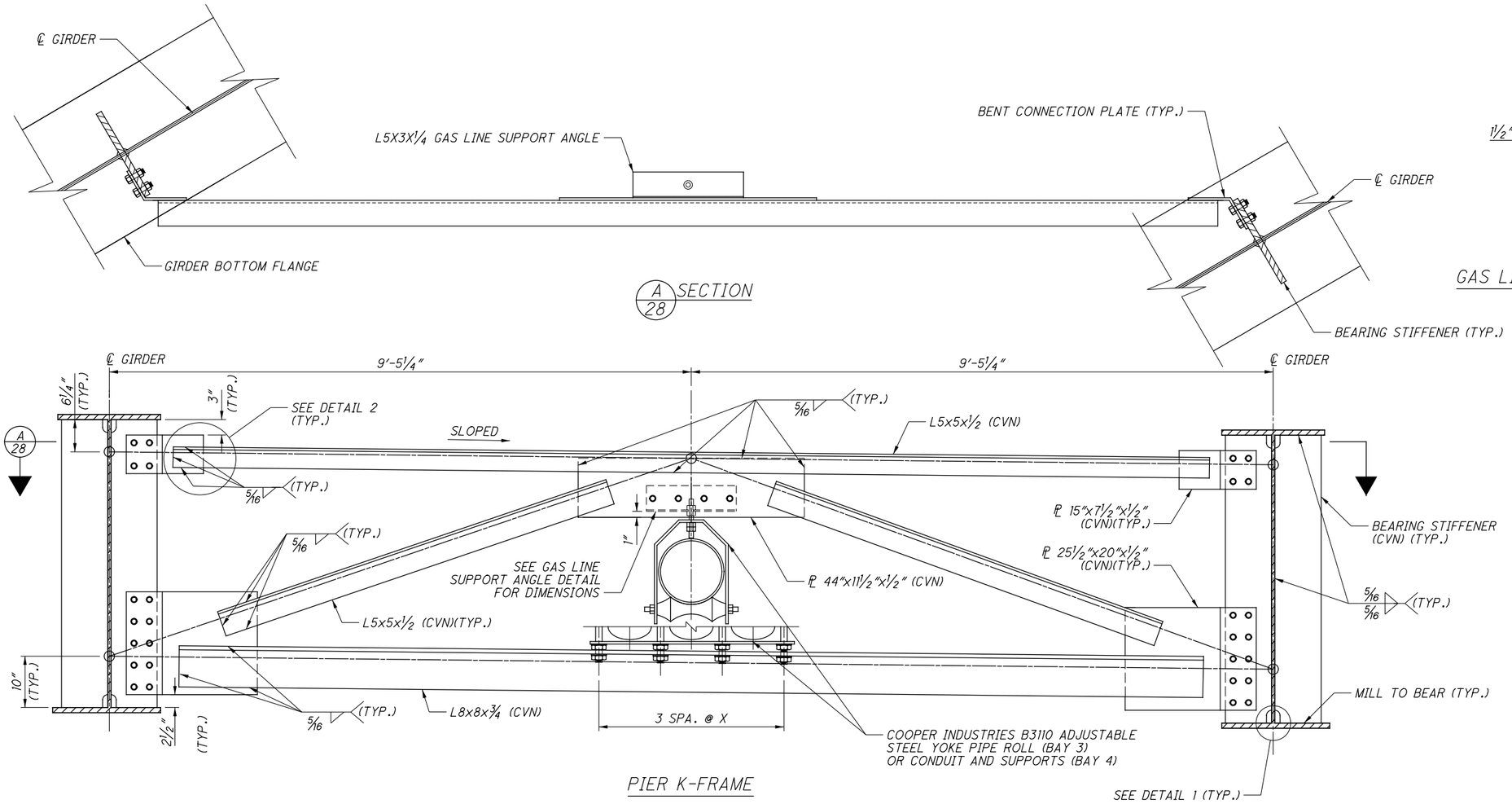

PIER K-FRAME

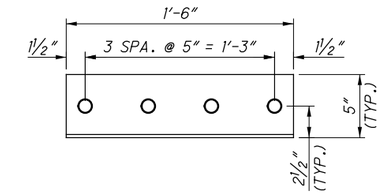

GAS LINE SUPPORT ANGLE DETAIL

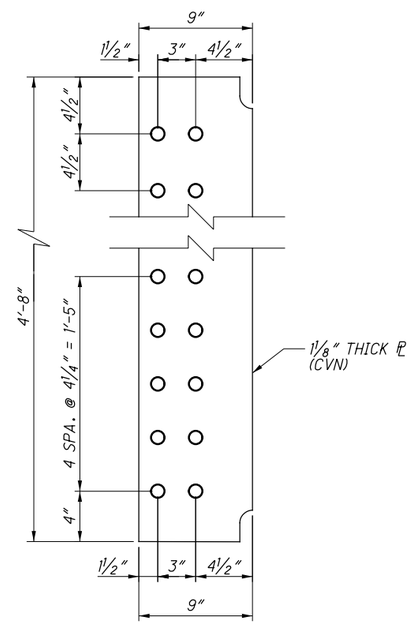

PIER BEARING STIFFENER

LOCATION	SKEW	X
PIER 1	33°06'58"	12⅞"
PIER 2	43°34'30"	11"

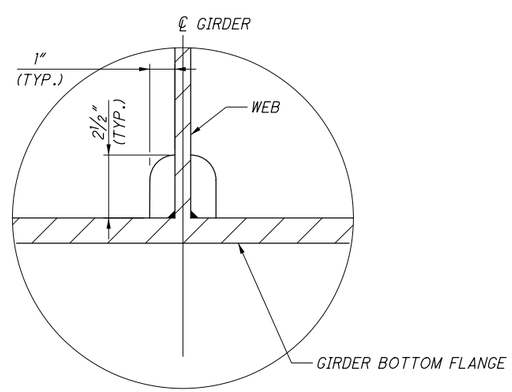

DETAIL 1

(TYP. BOTH TOP AND BOTTOM FLANGES)

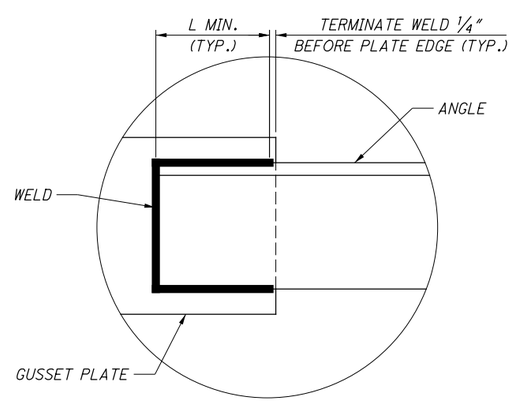

DETAIL 2

(TYP. ALL WELDED ANGLE CONNECTIONS)

NOTES :

1. ALL STEEL IS ASTM 709, GRADE 50W, UNLESS NOTED OTHERWISE.
2. HIGH STRENGTH BOLTS SHALL BE 1" DIAMETER, ASTM A325, TYPE III, UNLESS NOTED OTHERWISE.
3. ALL BOLT HOLES SHALL BE 1⅛" DIAMETER. K-FRAMES AND GIRDERS SHALL BE SHOP ASSEMBLED TO VERIFY FIT, UNLESS OTHER METHODS TO CHECK HOLE ALIGNMENT ARE APPROVED BY THE ODOT OFFICE OF MATERIALS MANAGEMENT IN ACCORDANCE WITH CMS 513.19 AND 513.24.
4. WHERE A SHAPE OR PLATE IS DESIGNATED 'CVN', FURNISH MATERIAL THAT MEETS THE MINIMUM NOTCH TOUGHNESS REQUIREMENTS AS SPECIFIED IN 711.01.
5. PREPARE FAYING SURFACES FOR PIER K-FRAME BOLTED CONNECTIONS TO PROVIDE CLASS B SURFACES.
6. FOR ADDITIONAL CONDUIT SUPPORT DETAILS NOT SHOWN ON THIS SHEET, SEE "INTERMEDIATE K-FRAME AND UTILITY SUPPORT DETAILS".

MEMBER SECTION	MINIMUM WELD LENGTH, L MIN
UPPER CHORD L5x5x½	3"
DIAGONAL L5x5x½	3"
LOWER CHORD L8x8x¾	5"

NO.	DATE	DESCRIPTION
1	2019-05-17	DC006, DRFI005
0	2019-03-13	RFC

ISSUE RECORD

DESIGN AGENCY
Michael Baker INTERNATIONAL
1111 SUPERIOR AVE E., SUITE 2300, CLEVELAND, OH 44114

DESIGNED	DRAWN	REVIEWED	DATE
ETB	ETB	JWB	3/01/19
CHECKED	REVISED	STRUCTURE FILE NUMBER	
MKB		1801518	

RECORD PLANS

PIER K-FRAME DETAILS
CUY-010-1978R
OH-10 EASTBOUND OVER GCRTA BLUE AND GREEN LINES

RECORD PLANS

CUY-IR490/SR010-2.09/19.28
PID No. 96833

RECORD PLANS

BU-19 - GCRTA BLUE/GREEN BRIDGES & CATENARY MODIFICATIONS
...\Sheets\010_1978R_SD410.dgn 6/27/2019 4:57:18 PM Christopher.Lemley

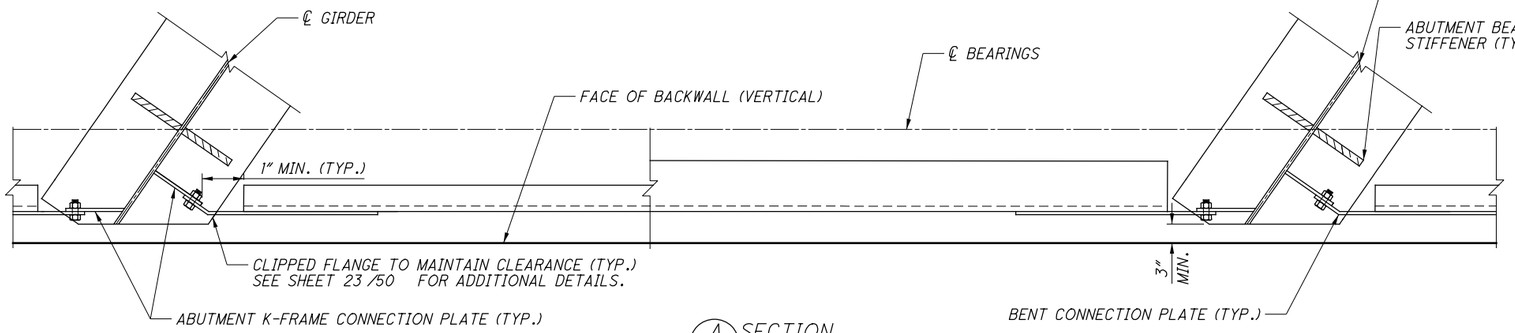

A 29 SECTION

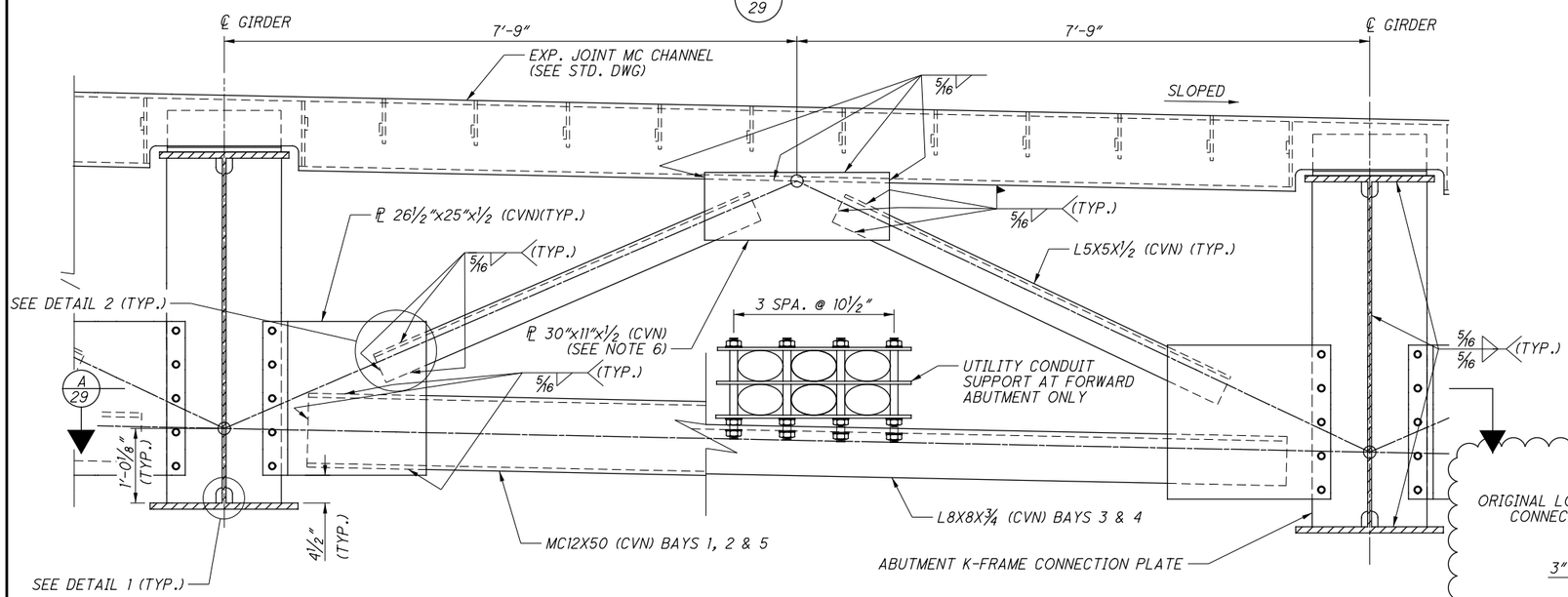

ABUTMENT K-FRAME

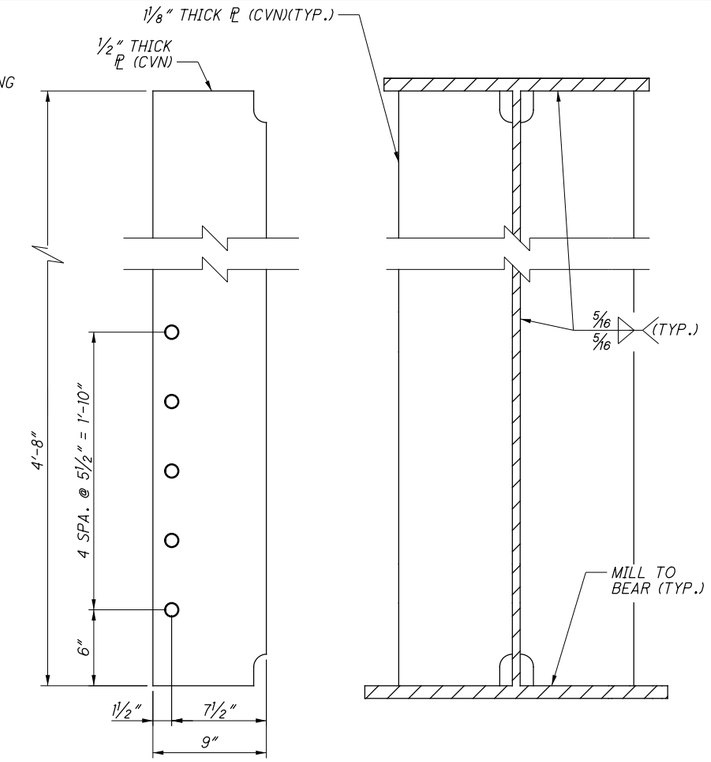

ABUTMENT K-FRAME CONNECTION PLATE

ABUTMENT BEARING STIFFENER

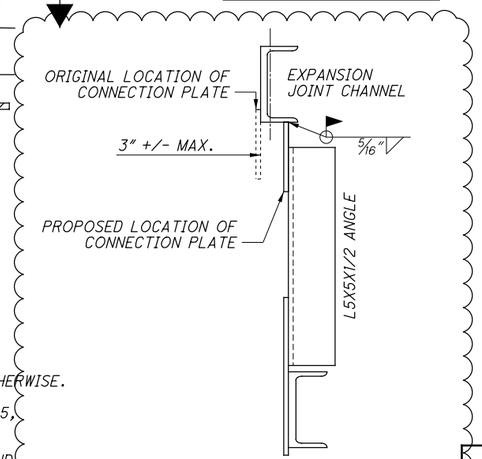

FIELD CONNECTION DETAIL, REAR ABUTMENT G4-5 & G5-6

FOR REPAIR OF METALLIZED SURFACES, APPLY ZINC-RICH PAINT AS PER ASTM A 780 AS PER C&MS 711.02.

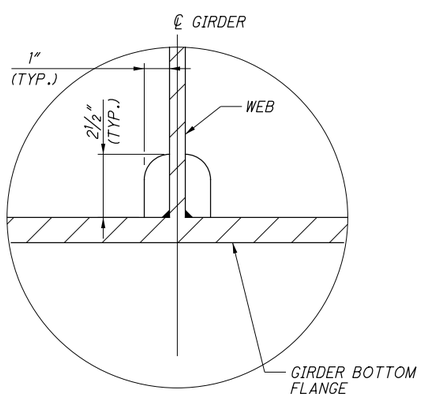

DETAIL 1

(TYP. BOTH TOP AND BOTTOM FLANGES)

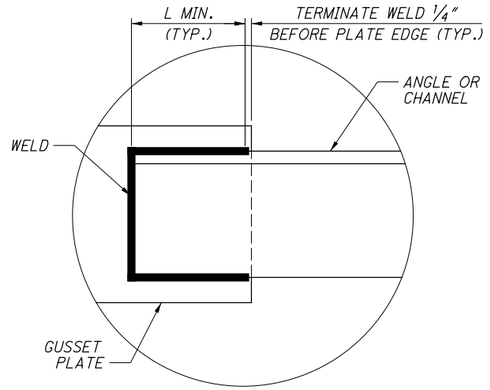

DETAIL 2

(TYP. ALL WELDED ANGLE CONNECTIONS)

NOTES :

1. ALL STEEL IS ASTM 709, GRADE 50W, UNLESS NOTED OTHERWISE.
2. HIGH STRENGTH BOLTS SHALL BE 1" DIAMETER, ASTM A325, TYPE III, UNLESS NOTED OTHERWISE.
3. ALL BOLT HOLES SHALL BE 1⅛" DIAMETER. K-FRAMES AND GIRDERS SHALL BE SHOP ASSEMBLED TO VERIFY FIT, UNLESS OTHER METHODS TO CHECK HOLE ALIGNMENT ARE APPROVED BY THE ODOT OFFICE OF MATERIALS MANAGEMENT IN ACCORDANCE WITH C&MS 513.19 AND 513.24.
4. WHERE A SHAPE OR PLATE IS DESIGNATED 'CVN', FURNISH MATERIAL THAT MEETS THE MINIMUM NOTCH TOUGHNESS REQUIREMENTS AS SPECIFIED IN 711.01.
5. PREPARE FAYING SURFACES OF ABUTMENT K-FRAME BOLTED CONNECTIONS TO PROVIDE CLASS B SURFACES.
6. THE 1/2" PLATE IS PART OF THE EXPANSION JOINT SYSTEM. REFER TO EXJ-4-87 FOR MATERIAL AND COATING REQUIREMENTS.
7. FOR ADDITIONAL CONDUIT SUPPORT DETAILS NOT SHOWN ON THIS SHEET, SEE "INTERMEDIATE K-FRAME AND UTILITY SUPPORT DETAILS".

MEMBER SECTION	MINIMUM WELD LENGTH, L MIN
DIAGONAL L5x5x½	4½"
LOWER CHORD MC12X50	5"
UTILITY SUPPORT L8x8x¾	5"

NO.	DATE	DESCRIPTION
2	2024-09-10	RECORD DRAWINGS
1	2019-05-17	DC006, DRFI005
0	2019-03-13	RFC

ISSUE RECORD

DESIGN AGENCY
Michael Baker INTERNATIONAL
1111 SUPERIOR AVE E., SUITE 2300, CLEVELAND, OH 44114

DESIGNED	DRAWN	REVIEWED	DATE
ETB	ETB	JWB	3/01/19
CHECKED	REVISED	STRUCTURE FILE NUMBER	
MKB		1801518	

RECORD PLANS

ABUTMENT K-FRAME DETAILS

CUY-010-1978R

OH-10 EASTBOUND OVER GCRTA BLUE AND GREEN LINES

RECORD PLANS

CUY-IR490/SR010-2.09/19.28

PID No. 96833

RECORD PLANS

BU-19 - GCRTA BLUE/GREEN BRIDGES & CATENARY MODIFICATIONS

...\Sheets\010_1978R_SD411.dgn 11/21/2024 4:40:01 PM Rohit.Bk

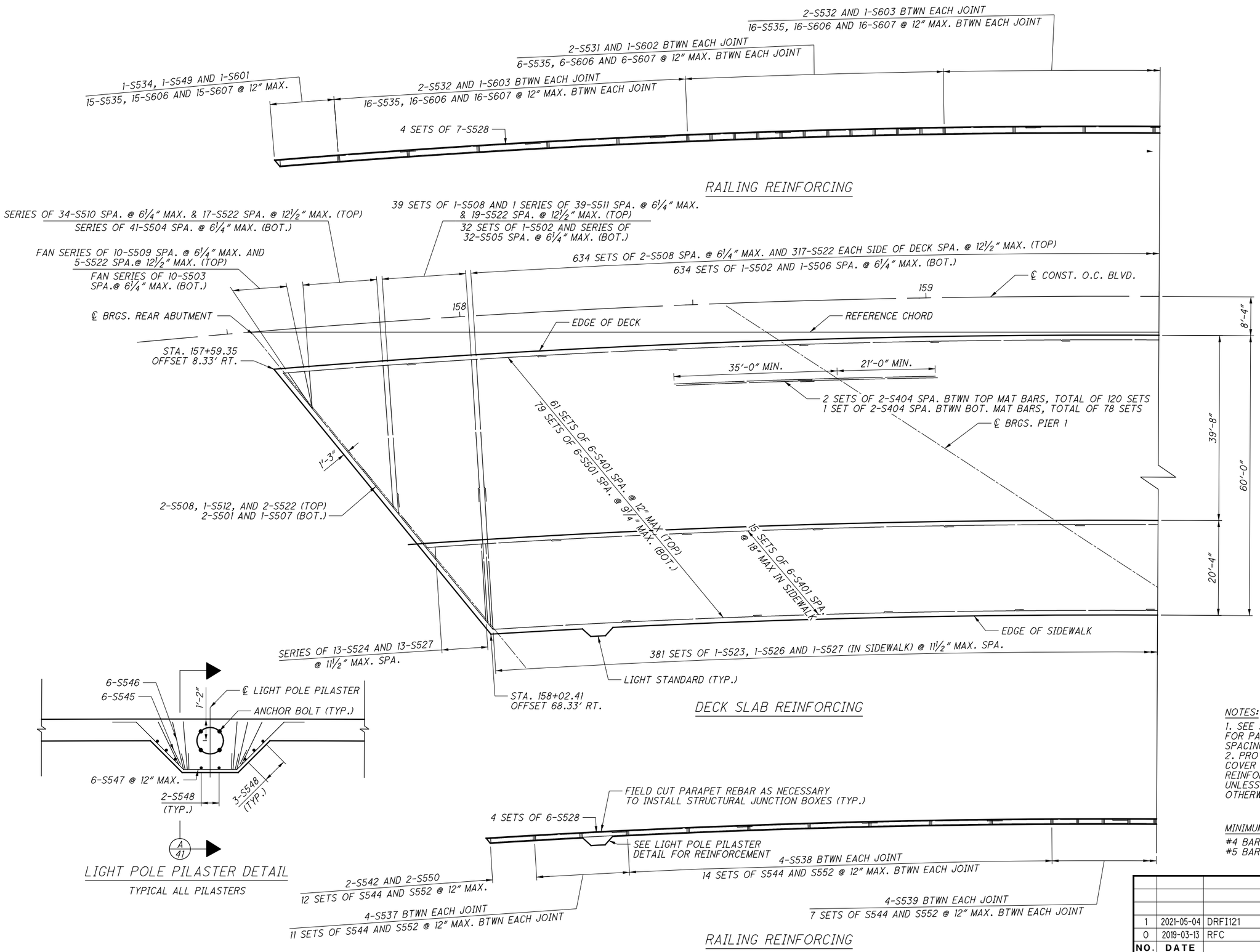

NOTES:

1. SEE SHEET 35 FOR PARAPET JOINT SPACING
2. PROVIDE 2" CONCRETE COVER ON REINFORCEMENT BARS UNLESS NOTED OTHERWISE.

MINIMUM LAP LENGTHS:

#4 BAR 1'-11"
#5 BAR 3'-2"

NO.	DATE	DESCRIPTION
1	2021-05-04	DRFI121
0	2019-03-13	RFC

ISSUE RECORD

DESIGN AGENCY
Michael Baker INTERNATIONAL
1111 SUPERIOR AVE E., SUITE 2300, CLEVELAND, OH 44114

DESIGNED	DRAWN	REVIEWED	DATE
ETB	SSW	JWB	3/01/19
CHECKED	REVISED	STRUCTURE FILE NUMBER	
EKW		1801518	

RECORD PLANS

DECK PLAN (1 OF 2)
CUY-010-1978R
OH-10 EASTBOUND OVER GCRTA BLUE AND GREEN LINES

RECORD PLANS

CUY-IR490/SR010-2.09/19.28
PID No. 96833

RECORD PLANS

BU-19 - GCRTA BLUE/GREEN BRIDGES & CATENARY MODIFICATIONS
...\Sheets\010_1978R_SD405.dgn 5/25/2021 4:03:20 PM David.Fell

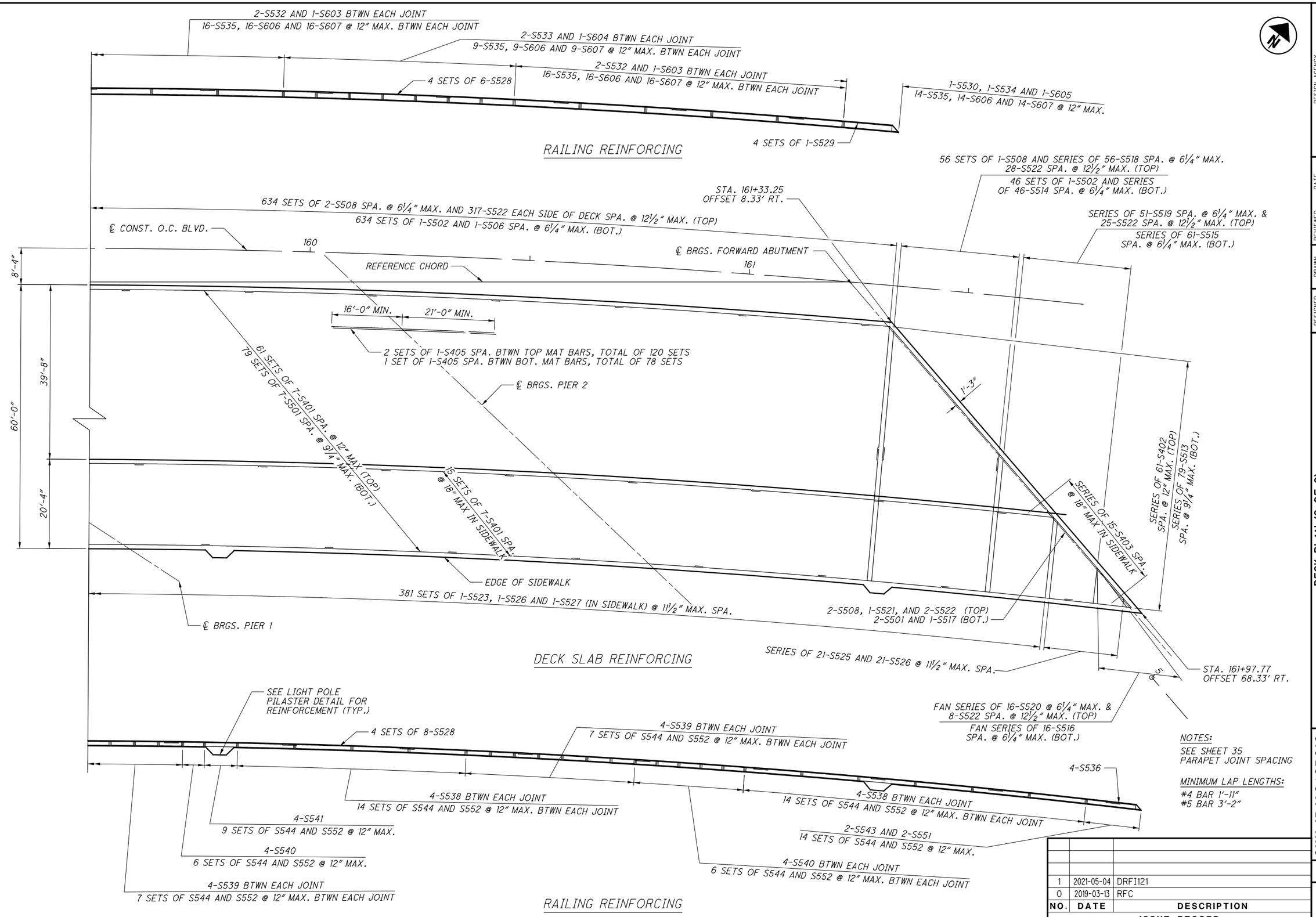

NO.	DATE	DESCRIPTION
1	2021-05-04	DRFI121
0	2019-03-13	RFC

ISSUE RECORD

DESIGN AGENCY
Michael Baker INTERNATIONAL
1111 SUPERIOR AVE E., SUITE 2300, CLEVELAND, OH 44114

DESIGNED	DRAWN	REVIEWED	DATE
ETB	SSW	JWB	3/01/19
CHECKED	REVISED	STRUCTURE FILE NUMBER	
EKW		1801518	

RECORD PLANS

DECK PLAN (2 OF 2)
CUY-010-1978R
OH-10 EASTBOUND OVER GCRTA BLUE AND GREEN LINES

RECORD PLANS

CUY-IR490/SR010-2.09/19.28
PID No. 96833

RECORD PLANS

31/50

36/110

BU-19 - GCRTA BLUE/GREEN BRIDGES & CATENARY MODIFICATIONS
...\Sheets\010_1978R_SD406.dgn 5/25/2021 4:03:47 PM David.Fell

FINAL DECK AND SIDEWALK SURFACE STATIONS, OFFSETS & ELEVATIONS

	ELEVATION LINE	℄ BRGS R.A.	1/8 SPAN	1/4 SPAN	3/8 SPAN	1/2 SPAN	5/8 SPAN	3/4 SPAN	FIELD SPLICE 1	7/8 SPAN	℄ BRGS PIER 1
SPAN 1	TOE OF PARAPET	157+62.04 10.00' RT.	157+75.61 10.00' RT.	157+89.19 10.00' RT.	158+02.77 10.00' RT.	158+16.34 10.00' RT.	158+29.92 10.00' RT.	158+43.50 10.00' RT.	- -	158+57.07 10.00' RT.	158+70.65 10.00' RT.
		684.19'	684.44'	684.70'	684.95'	685.20'	685.45'	685.70'	-	685.95'	686.20'
	GIRDER G1	157+63.49 12.08' RT.	157+77.26 12.08' RT.	157+91.03 12.08' RT.	158+04.80 12.08' RT.	158+18.57 12.08' RT.	158+32.34 12.08' RT.	158+46.11 12.08' RT.	158+47.56 12.08' RT.	158+59.88 12.08' RT.	158+73.66 12.08' RT.
		684.18'	684.43'	684.69'	684.94'	685.20'	685.45'	685.71'	685.73'	685.96'	686.22'
	GIRDER G2	157+70.85 22.58' RT.	157+85.62 22.58' RT.	158+00.38 22.58' RT.	158+15.15 22.58' RT.	158+29.92 22.58' RT.	158+44.69 22.58' RT.	158+59.45 22.58' RT.	158+59.65 22.58' RT.	158+74.22 22.58' RT.	158+88.99 22.58' RT.
		684.10'	684.38'	684.65'	684.92'	685.20'	685.47'	685.74'	685.75'	686.02'	686.29'
	GIRDER G3	157+78.30 33.08' RT.	157+94.09 33.08' RT.	158+09.88 33.08' RT.	158+25.67 33.08' RT.	158+41.46 33.08' RT.	158+57.25 33.08' RT.	158+73.04 33.08' RT.	158+75.78 33.08' RT.	158+88.84 33.08' RT.	159+04.63 33.08' RT.
		684.03'	684.32'	684.62'	684.91'	685.20'	685.49'	685.78'	685.84'	686.08'	686.37'
	GIRDER G4	157+85.85 43.58' RT.	158+02.69 43.58' RT.	158+19.53 43.58' RT.	158+36.37 43.58' RT.	158+53.22 43.58' RT.	158+70.06 43.58' RT.	158+86.90 43.58' RT.	158+91.91 43.58' RT.	159+03.74 43.58' RT.	159+20.59 43.58' RT.
		683.96'	684.27'	684.58'	684.90'	685.21'	685.52'	685.83'	685.92'	686.14'	686.41'
	FACE OF CURB	157+89.05 48.00' RT.	158+06.34 48.00' RT.	158+23.63 48.00' RT.	158+40.93 48.00' RT.	158+58.22 48.00' RT.	158+75.52 48.00' RT.	158+92.81 48.00' RT.	- -	159+10.10 48.00' RT.	159+27.40 48.00' RT.
		683.93'	684.25'	684.57'	684.89'	685.21'	685.53'	685.85'	-	686.16'	686.41'
	GIRDER G5*	157+93.48 54.08' RT.	158+11.41 54.08' RT.	158+29.33 54.08' RT.	158+47.26 54.08' RT.	158+65.18 54.08' RT.	158+83.11 54.08' RT.	159+01.03 54.08' RT.	159+05.89 54.08' RT.	159+18.96 54.08' RT.	159+36.88 54.08' RT.
		684.80'	685.13'	685.46'	685.79'	686.13'	686.46'	686.79'	686.88'	687.08'	687.31'
	GIRDER G6*	158+01.21 64.58' RT.	158+20.25 64.58' RT.	158+39.29 64.58' RT.	158+58.33 64.58' RT.	158+77.37 64.58' RT.	158+96.41 64.58' RT.	159+15.45 64.58' RT.	159+28.19 64.58' RT.	159+34.49 64.58' RT.	159+53.53 64.58' RT.
		685.15'	685.50'	685.86'	686.21'	686.56'	686.91'	687.24'	687.42'	687.49'	687.67'
	FACE OF PARAPET*	158+03.00 67.00' RT.	158+22.30 67.00' RT.	158+41.61 67.00' RT.	158+60.91 67.00' RT.	158+80.21 67.00' RT.	158+99.51 67.00' RT.	159+18.81 67.00' RT.	- -	159+38.11 67.00' RT.	159+57.41 67.00' RT.
		685.23'	685.59'	685.95'	686.31'	686.66'	687.02'	687.34'	-	687.58'	687.74'

	ELEVATION LINE	℄ BRGS PIER 1	1/8 SPAN	FIELD SPLICE 2	1/4 SPAN	3/8 SPAN	1/2 SPAN	5/8 SPAN	3/4 SPAN	FIELD SPLICE 3	7/8 SPAN	℄ BRGS PIER 2
SPAN 2	TOE OF PARAPET	158+70.65 10.00' RT.	158+88.54 10.00' RT.	- -	159+06.42 10.00' RT.	159+24.31 10.00' RT.	159+42.20 10.00' RT.	159+60.08 10.00' RT.	159+77.97 10.00' RT.	- -	159+95.86 10.00' RT.	160+13.74 10.00' RT.
		686.20'	686.53'	-	686.86'	687.13'	687.34'	687.47'	687.54'	-	687.54'	687.47'
	GIRDER G1	158+73.66 12.08' RT.	158+91.46 12.08' RT.	159+01.99 12.08' RT.	159+09.27 12.08' RT.	159+27.07 12.08' RT.	159+44.88 12.08' RT.	159+62.68 12.08' RT.	159+80.49 12.08' RT.	159+92.70 12.08' RT.	159+98.30 12.08' RT.	160+16.10 12.08' RT.
		686.22'	686.55'	686.74'	686.87'	687.13'	687.32'	687.44'	687.50'	687.50'	687.49'	687.42'
	GIRDER G2	158+88.99 22.58' RT.	159+06.38 22.58' RT.	159+18.11 22.58' RT.	15923.77' RT 22.58' RT.	159+41.15 22.58' RT.	159+58.54 22.58' RT.	159+75.93 22.58' RT.	159+93.32 22.58' RT.	160+02.78 22.58' RT.	160+10.71 22.58' RT.	160+28.10 22.58' RT.
		686.29'	686.61'	686.79'	686.87'	687.07'	687.21'	687.28'	687.29'	687.27'	687.24'	687.12'
	GIRDER G3	159+04.63 33.08' RT.	159+21.58 33.08' RT.	159+34.24 33.08' RT.	159+38.54 33.08' RT.	159+55.50 33.08' RT.	159+72.46 33.08' RT.	159+89.42 33.08' RT.	160+06.38 33.08' RT.	160+14.88 33.08' RT.	160+23.34 33.08' RT.	160+40.29 33.08' RT.
		686.37'	686.63'	686.79'	686.84'	686.98'	687.06'	687.09'	687.05'	687.00'	686.95'	686.78'
	GIRDER G4	159+20.59 43.58' RT.	159+37.10 43.58' RT.	159+49.94 43.58' RT.	159+53.61 43.58' RT.	159+70.12 43.58' RT.	159+86.63 43.58' RT.	160+03.15 43.58' RT.	160+19.66 43.58' RT.	160+26.97 43.58' RT.	160+36.17 43.58' RT.	160+52.68 43.58' RT.
		686.41'	686.61'	686.73'	686.76'	686.85'	686.88'	686.85'	686.76'	686.71'	686.62'	686.42'
	FACE OF CURB	159+27.40 48.00' RT.	159+43.72 48.00' RT.	- -	159+60.04 48.00' RT.	159+76.36 48.00' RT.	159+92.68 48.00' RT.	160+09.00 48.00' RT.	160+25.32 48.00' RT.	- -	160+41.64 48.00' RT.	160+57.96 48.00' RT.
		686.41'	686.59'	-	686.71'	686.78'	686.78'	686.74'	686.63'	-	686.47'	686.25'
	GIRDER G5*	159+36.88 54.08' RT.	159+52.93 54.08' RT.	159+66.50 54.08' RT.	159+68.98 54.08' RT.	159+85.03 54.08' RT.	160+01.08 54.08' RT.	160+17.13 54.08' RT.	160+33.18 54.08' RT.	160+40.29 54.08' RT.	160+49.23 54.08' RT.	160+65.28 54.08' RT.
		687.31'	687.45'	687.53'	687.54'	687.57'	687.55'	687.48'	687.35'	687.27'	687.16'	686.92'
	GIRDER G6*	159+53.53 64.58' RT.	159+69.10 64.58' RT.	159+80.61 64.58' RT.	159+84.67 64.58' RT.	160+00.24 64.58' RT.	160+15.81 64.58' RT.	160+31.38 64.58' RT.	160+46.94 64.58' RT.	160+52.68 64.58' RT.	160+62.51 64.58' RT.	160+78.08 64.58' RT.
		687.67'	687.75'	687.78'	687.78'	687.76'	687.69'	687.57'	687.40'	687.32'	687.17'	686.90'
	FACE OF PARAPET*	159+57.41 67.00' RT.	159+72.86 67.00' RT.	- -	159+88.32 67.00' RT.	160+03.78 67.00' RT.	160+19.24 67.00' RT.	160+34.69 67.00' RT.	160+50.15 67.00' RT.	- -	160+65.61 67.00' RT.	160+81.06 67.00' RT.
		687.74'	687.81'	-	687.83'	687.80'	687.72'	687.59'	687.41'	-	687.17'	686.89'

	ELEVATION LINE	℄ BRGS PIER 2	1/8 SPAN	FIELD SPLICE 4	1/4 SPAN	3/8 SPAN	1/2 SPAN	5/8 SPAN	3/4 SPAN	7/8 SPAN	℄ BRGS F.A.
SPAN 3	TOE OF PARAPET	160+13.74 10.00' RT.	160+28.67 10.00' RT.	- -	160+43.60 10.00' RT.	160+58.53 10.00' RT.	160+73.46 10.00' RT.	160+88.38 10.00' RT.	161+03.31 10.00' RT.	161+18.24 10.00' RT.	161+33.17 10.00' RT.
		687.47'	687.36'	-	687.21'	687.00'	686.75'	686.45'	686.11'	685.75'	685.39'
	GIRDER G1	160+16.10 12.08' RT.	160+31.00 12.08' RT.	160+41.08 12.08' RT.	160+45.91 12.08' RT.	160+60.81 12.08' RT.	160+75.71 12.08' RT.	160+90.61 12.08' RT.	161+05.51 12.08' RT.	161+20.42 12.08' RT.	161+35.32 12.08' RT.
		687.42'	687.30'	687.19'	687.14'	686.92'	686.67'	686.36'	686.01'	685.65'	685.29'
	GIRDER G2	160+28.10 22.58' RT.	160+42.87 22.58' RT.	160+53.18 22.58' RT.	160+57.64 22.58' RT.	160+72.41 22.58' RT.	160+87.18 22.58' RT.	161+01.95 22.58' RT.	161+16.72 22.58' RT.	161+31.48 22.58' RT.	161+46.25 22.58' RT.
		687.12'	686.96'	686.83'	686.76'	686.52'	686.23'	685.89'	685.53'	685.18'	684.82'
	GIRDER G3	160+40.29 33.08' RT.	160+54.93 33.08' RT.	160+65.27 33.08' RT.	160+69.56 33.08' RT.	160+84.19 33.08' RT.	160+98.82 33.08' RT.	161+13.45 33.08' RT.	161+28.09 33.08' RT.	161+42.72 33.08' RT.	161+57.35 33.08' RT.
		686.78'	686.59'	686.43'	686.36'	686.08'	685.75'	685.40'	685.05'	684.70'	684.34'
	GIRDER G4	160+52.68 43.58' RT.	160+67.18 43.58' RT.	160+79.38 43.58' RT.	160+81.67 43.58' RT.	160+96.16 43.58' RT.	161+10.65 43.58' RT.	161+25.14 43.58' RT.	161+39.63 43.58' RT.	161+54.12 43.58' RT.	161+68.62 43.58' RT.
		686.42'	686.19'	685.97'	685.92'	685.61'	685.26'	684.91'	684.56'	684.21'	683.86'
	FACE OF CURB	160+57.96 48.00' RT.	160+72.39 48.00' RT.	- -	160+86.82 48.00' RT.	161+01.25 48.00' RT.	161+15.68 48.00' RT.	161+30.11 48.00' RT.	161+44.54 48.00' RT.	161+58.97 48.00' RT.	161+73.41 48.00' RT.
		686.25'	686.01'	-	685.73'	685.40'	685.05'	684.70'	684.35'	684.01'	683.66'
	GIRDER G5*	160+65.28 54.08' RT.	160+79.63 54.08' RT.	160+91.08 54.08' RT.	160+93.97 54.08' RT.	161+08.32 54.08' RT.	161+22.67 54.08' RT.	161+37.01 54.08' RT.	161+51.36 54.08' RT.	161+65.71 54.08' RT.	161+80.05 54.08' RT.
		686.92'	686.66'	686.42'	686.35'	686.01'	685.67'	685.32'	684.97'	684.63'	684.28'
	GIRDER G6*	160+78.08 64.58' RT.	160+92.28 64.58' RT.	161+01.56 64.58' RT.	161+06.48 64.58' RT.	161+20.68 64.58' RT.	161+34.88 64.58' RT.	161+49.08 64.58' RT.	161+63.27 64.58' RT.	161+77.47 64.58' RT.	161+91.67 64.58' RT.
		686.90'	686.60'	686.38'	686.26'	685.92'	685.58'	685.24'	684.90'	684.55'	684.21'
	FACE OF PARAPET*	160+81.06 67.00' RT.	160+95.23 67.00' RT.	- -	161+09.39 67.00' RT.	161+23.55 67.00' RT.	161+37.72 67.00' RT.	161+51.88 67.00' RT.	161+66.04 67.00' RT.	161+80.21 67.00' RT.	161+94.37 67.00' RT.
		686.89'	686.58'	-	686.24'	685.90'	685.56'	685.22'	684.88'	684.54'	684.20'

*TOP OF SIDEWALK ELEVATIONS SHOWN

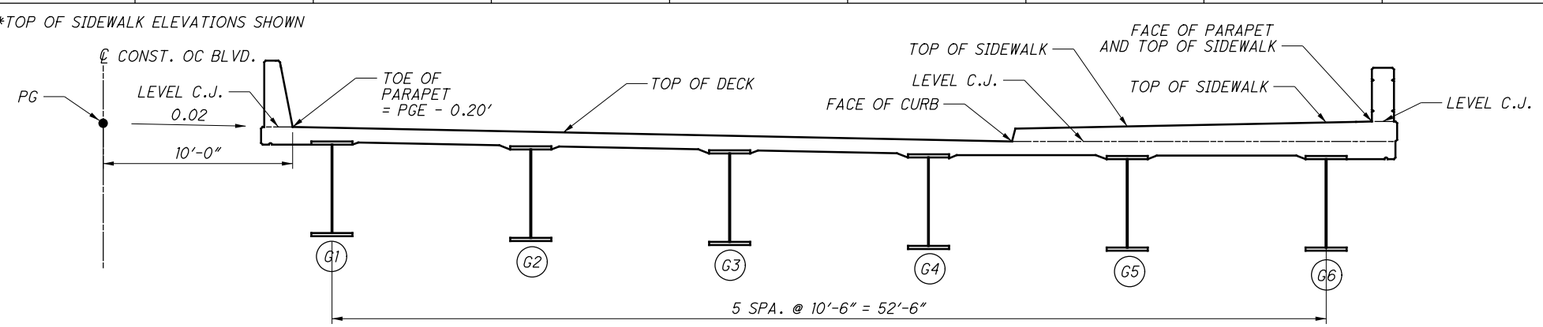

NOTES:

1. FINAL DECK SURFACE ELEVATIONS SHOWN REPRESENT THE DECK SURFACE LOCATION AFTER ALL ANTICIPATED DEAD LOAD DEFLECTIONS HAVE OCCURRED.
2. SCREED ELEVATIONS ARE GIVEN AT 1/8, 1/4, 3/8, 1/2, 5/8, 3/4, 7/8 ALONG ℄ OF EACH CURVED GIRDER AND ALONG THE ARC LENGTHS FOR FACE OF CURB, FACE OF PARAPET, AND TOE OF PARAPET.

NO.	DATE	DESCRIPTION
0	2019-03-13	RFC

ISSUE RECORD

DESIGN AGENCY
Michael Baker INTERNATIONAL
1111 SUPERIOR AVE E., SUITE 2300, CLEVELAND, OH 44114

DESIGNED	DRAWN	REVIEWED	DATE
EKW	EKW	JWB	3/01/19
CHECKED	REVISED	STRUCTURE FILE NUMBER	
MKB		1801518	

RECORD PLANS

FINAL DECK SURFACE ELEVATION TABLE
CUY-010-1978R
OH-10 EASTBOUND OVER GCRTA BLUE AND GREEN LINES

RECORD PLANS

CUY-IR490/SR010-2.09/19.28
PID No. 96833

RECORD PLANS

BU-19 - GCRTA BLUE/GREEN BRIDGES & CATENARY MODIFICATIONS
...\Sheets\010_1978R_SD407.dgn 6/27/2019 4:57:45 PM Christopher.Lemley

DECK SCREED SURFACE STATIONS, OFFSETS & ELEVATIONS

	ELEVATION LINE	℄ BRGS R.A.	1/8 SPAN	1/4 SPAN	3/8 SPAN	1/2 SPAN	5/8 SPAN	3/4 SPAN	FIELD SPLICE 1	7/8 SPAN	℄ BRGS PIER 1
SPAN 1	TOE OF PARAPET	157+62.04 10.00′ RT.	157+75.61 10.00′ RT.	157+89.19 10.00′ RT.	158+02.77 10.00′ RT.	158+16.34 10.00′ RT.	158+29.92 10.00′ RT.	158+43.50 10.00′ RT.	- -	158+57.07 10.00′ RT.	158+70.65 10.00′ RT.
		684.19′	684.50′	684.79′	685.05′	685.30′	685.53′	685.74′	-	685.97′	686.20′
	GIRDER G1	157+63.49 12.08′ RT.	157+77.26 12.08′ RT.	157+91.03 12.08′ RT.	158+04.80 12.08′ RT.	158+18.57 12.08′ RT.	158+32.34 12.08′ RT.	158+46.11 12.08′ RT.	158+47.56 12.08′ RT.	158+59.88 12.08′ RT.	158+73.66 12.08′ RT.
		684.18′	684.49′	684.78′	685.05′	685.30′	685.53′	685.75′	685.77′	685.98′	686.22′
	GIRDER G2	157+70.85 22.58′ RT.	157+85.62 22.58′ RT.	158+00.38 22.58′ RT.	158+15.15 22.58′ RT.	158+29.92 22.58′ RT.	158+44.69 22.58′ RT.	158+59.45 22.58′ RT.	158+59.65 22.58′ RT.	158+74.22 22.58′ RT.	158+88.99 22.58′ RT.
		684.10′	684.43′	684.75′	685.04′	685.30′	685.55′	685.79′	685.80′	686.04′	686.29′
	GIRDER G3	157+78.30 33.08′ RT.	157+94.09 33.08′ RT.	158+09.88 33.08′ RT.	158+25.67 33.08′ RT.	158+41.46 33.08′ RT.	158+57.25 33.08′ RT.	158+73.04 33.08′ RT.	158+75.78 33.08′ RT.	158+88.84 33.08′ RT.	159+04.63 33.08′ RT.
		684.03′	684.40′	684.74′	685.06′	685.34′	685.61′	685.85′	685.90′	686.11′	686.37′
	GIRDER G4	157+85.85 43.58′ RT.	158+02.69 43.58′ RT.	158+19.53 43.58′ RT.	158+36.37 43.58′ RT.	158+53.22 43.58′ RT.	158+70.06 43.58′ RT.	158+86.90 43.58′ RT.	158+91.91 43.58′ RT.	159+03.74 43.58′ RT.	159+20.59 43.58′ RT.
		683.96′	684.37′	684.76′	685.11′	685.42′	685.68′	685.93′	686.00′	686.18′	686.41′
	FACE OF CURB	157+89.05 48.00′ RT.	158+06.34 48.00′ RT.	158+23.63 48.00′ RT.	158+40.93 48.00′ RT.	158+58.22 48.00′ RT.	158+75.52 48.00′ RT.	158+92.81 48.00′ RT.	- -	159+10.10 48.00′ RT.	159+27.40 48.00′ RT.
		683.93′	684.37′	684.78′	685.15′	685.46′	685.73′	685.97′	-	686.21′	686.41′
	GIRDER G5	157+93.48 54.08′ RT.	158+11.41 54.08′ RT.	158+29.33 54.08′ RT.	158+47.26 54.08′ RT.	158+65.18 54.08′ RT.	158+83.11 54.08′ RT.	159+01.03 54.08′ RT.	159+05.89 54.08′ RT.	159+18.96 54.08′ RT.	159+36.88 54.08′ RT.
		684.01′	684.49′	684.93′	685.32′	685.64′	685.91′	686.15′	686.21′	686.36′	686.52′
	GIRDER G6	158+01.21 64.58′ RT.	158+20.25 64.58′ RT.	158+39.29 64.58′ RT.	158+58.33 64.58′ RT.	158+77.37 64.58′ RT.	158+96.41 64.58′ RT.	159+15.45 64.58′ RT.	159+28.19 64.58′ RT.	159+34.49 64.58′ RT.	159+53.53 64.58′ RT.
		684.15′	684.72′	685.22′	685.64′	685.98′	686.23′	686.43′	686.52′	686.56′	686.67′
	FACE OF PARAPET	- -	- -	- -	- -	- -	- -	- -	- -	- -	- -
		-	-	-	-	-	-	-	-	-	-

	ELEVATION LINE	℄ BRGS PIER 1	1/8 SPAN	FIELD SPLICE 2	1/4 SPAN	3/8 SPAN	1/2 SPAN	5/8 SPAN	3/4 SPAN	FIELD SPLICE 3	7/8 SPAN	℄ BRGS PIER 2
SPAN 2	TOE OF PARAPET	158+70.65 10.00′ RT.	158+88.54 10.00′ RT.	- -	159+06.42 10.00′ RT.	159+24.31 10.00′ RT.	159+42.20 10.00′ RT.	159+60.08 10.00′ RT.	159+77.97 10.00′ RT.	- -	159+95.86 10.00′ RT.	160+13.74 10.00′ RT.
		686.20′	686.56′	-	686.93′	687.25′	687.47′	687.59′	687.62′	-	687.57′	687.47′
	GIRDER G1	158+73.66 12.08′ RT.	158+91.46 12.08′ RT.	159+01.99 12.08′ RT.	159+09.27 12.08′ RT.	159+27.07 12.08′ RT.	159+44.88 12.08′ RT.	159+62.68 12.08′ RT.	159+80.49 12.08′ RT.	159+92.70 12.08′ RT.	159+98.30 12.08′ RT.	160+16.10 12.08′ RT.
		686.22′	686.57′	686.79′	686.93′	687.24′	687.46′	687.57′	687.58′	687.54′	687.52′	687.42′
	GIRDER G2	158+88.99 22.58′ RT.	159+06.38 22.58′ RT.	159+18.11 22.58′ RT.	159+23.77 22.58′ RT.	159+41.15 22.58′ RT.	159+58.54 22.58′ RT.	159+75.93 22.58′ RT.	159+93.32 22.58′ RT.	160+02.78 22.58′ RT.	160+10.71 22.58′ RT.	160+28.10 22.58′ RT.
		686.29′	686.62′	686.83′	686.92′	687.15′	687.30′	687.37′	687.34′	687.30′	687.25′	687.12′
	GIRDER G3	159+04.63 33.08′ RT.	159+21.58 33.08′ RT.	159+34.24 33.08′ RT.	159+38.54 33.08′ RT.	159+55.50 33.08′ RT.	159+72.46 33.08′ RT.	159+89.42 33.08′ RT.	160+06.38 33.08′ RT.	160+14.88 33.08′ RT.	160+23.34 33.08′ RT.	160+40.29 33.08′ RT.
		686.37′	686.64′	686.82′	686.87′	687.04′	687.14′	687.15′	687.09′	687.03′	686.96′	686.78′
	GIRDER G4	159+20.59 43.58′ RT.	159+37.10 43.58′ RT.	159+49.94 43.58′ RT.	159+53.61 43.58′ RT.	159+70.12 43.58′ RT.	159+86.63 43.58′ RT.	160+03.15 43.58′ RT.	160+19.66 43.58′ RT.	160+26.97 43.58′ RT.	160+36.17 43.58′ RT.	160+52.68 43.58′ RT.
		686.41′	686.62′	686.75′	686.78′	686.90′	686.94′	686.91′	686.80′	686.74′	686.63′	686.42′
	FACE OF CURB	159+27.40 48.00′ RT.	159+43.72 48.00′ RT.	- -	159+60.04 48.00′ RT.	159+76.36 48.00′ RT.	159+92.68 48.00′ RT.	160+09.00 48.00′ RT.	160+25.32 48.00′ RT.	- -	160+41.64 48.00′ RT.	160+57.96 48.00′ RT.
		686.41′	686.60′	-	686.74′	686.83′	686.85′	686.80′	686.67′	-	686.49′	686.25′
	GIRDER G5	159+36.88 54.08′ RT.	159+52.93 54.08′ RT.	159+66.50 54.08′ RT.	159+68.98 54.08′ RT.	159+85.03 54.08′ RT.	160+01.08 54.08′ RT.	160+17.13 54.08′ RT.	160+33.18 54.08′ RT.	160+40.29 54.08′ RT.	160+49.23 54.08′ RT.	160+65.28 54.08′ RT.
		686.52′	686.67′	686.76′	686.78′	686.84′	686.83′	686.75′	686.60′	686.51′	686.39′	686.13′
	GIRDER G6	159+53.53 64.58′ RT.	159+69.10 64.58′ RT.	159+80.61 64.58′ RT.	159+84.67 64.58′ RT.	160+00.24 64.58′ RT.	160+15.81 64.58′ RT.	160+31.38 64.58′ RT.	160+46.94 64.58′ RT.	160+52.68 64.58′ RT.	160+62.51 64.58′ RT.	160+78.08 64.58′ RT.
		686.67′	686.76′	686.81′	686.82′	686.83′	686.78′	686.65′	686.45′	686.36′	686.19′	685.90′
	FACE OF PARAPET	- -	- -	- -	- -	- -	- -	- -	- -	- -	- -	- -
		-	-	-	-	-	-	-	-	-	-	-

	ELEVATION LINE	℄ BRGS PIER 2	1/8 SPAN	FIELD SPLICE 4	1/4 SPAN	3/8 SPAN	1/2 SPAN	5/8 SPAN	3/4 SPAN	7/8 SPAN	℄ BRGS F.A.
SPAN 3	TOE OF PARAPET	160+13.74 10.00′ RT.	160+28.67 10.00′ RT.	- -	160+43.60 10.00′ RT.	160+58.53 10.00′ RT.	160+73.46 10.00′ RT.	160+88.38 10.00′ RT.	161+03.31 10.00′ RT.	161+18.24 10.00′ RT.	161+33.17 10.00′ RT.
		687.47′	687.39′	-	687.28′	687.13′	686.92′	686.64′	686.26′	685.84′	685.39′
	GIRDER G1	160+16.10 12.08′ RT.	160+31.00 12.08′ RT.	160+41.08 12.08′ RT.	160+45.91 12.08′ RT.	160+60.81 12.08′ RT.	160+75.71 12.08′ RT.	160+90.61 12.08′ RT.	161+05.51 12.08′ RT.	161+20.42 12.08′ RT.	161+35.32 12.08′ RT.
		687.42′	687.33′	687.25′	687.21′	687.06′	686.84′	686.55′	686.17′	685.74′	685.29′
	GIRDER G2	160+28.10 22.58′ RT.	160+42.87 22.58′ RT.	160+53.18 22.58′ RT.	160+57.64 22.58′ RT.	160+72.41 22.58′ RT.	160+87.18 22.58′ RT.	161+01.95 22.58′ RT.	161+16.72 22.58′ RT.	161+31.48 22.58′ RT.	161+46.25 22.58′ RT.
		687.12′	686.99′	686.88′	686.83′	686.62′	686.36′	686.03′	685.64′	685.24′	684.82′
	GIRDER G3	160+40.29 33.08′ RT.	160+54.93 33.08′ RT.	160+65.27 33.08′ RT.	160+69.56 33.08′ RT.	160+84.19 33.08′ RT.	160+98.82 33.08′ RT.	161+13.45 33.08′ RT.	161+28.09 33.08′ RT.	161+42.72 33.08′ RT.	161+57.35 33.08′ RT.
		686.78′	686.61′	686.48′	686.41′	686.17′	685.88′	685.53′	685.16′	684.76′	684.34′
	GIRDER G4	160+52.68 43.58′ RT.	160+67.18 43.58′ RT.	160+79.38 43.58′ RT.	160+81.67 43.58′ RT.	160+96.16 43.58′ RT.	161+10.65 43.58′ RT.	161+25.14 43.58′ RT.	161+39.63 43.58′ RT.	161+54.12 43.58′ RT.	161+68.62 43.58′ RT.
		686.42′	686.21′	686.02′	685.98′	685.70′	685.39′	685.04′	684.67′	684.28′	683.86′
	FACE OF CURB	160+57.96 48.00′ RT.	160+72.39 48.00′ RT.	- -	160+86.82 48.00′ RT.	161+01.25 48.00′ RT.	161+15.68 48.00′ RT.	161+30.11 48.00′ RT.	161+44.54 48.00′ RT.	161+58.97 48.00′ RT.	161+73.41 48.00′ RT.
		686.25′	686.03′	-	685.79′	685.50′	685.18′	684.84′	684.47′	684.07′	683.66′
	GIRDER G5	160+65.28 54.08′ RT.	160+79.63 54.08′ RT.	160+91.08 54.08′ RT.	160+93.97 54.08′ RT.	161+08.32 54.08′ RT.	161+22.67 54.08′ RT.	161+37.01 54.08′ RT.	161+51.36 54.08′ RT.	161+65.71 54.08′ RT.	161+80.05 54.08′ RT.
		686.13′	685.89′	685.69′	685.63′	685.33′	685.02′	684.68′	684.32′	683.92′	683.49′
	GIRDER G6	160+78.08 64.58′ RT.	160+92.28 64.58′ RT.	161+01.56 64.58′ RT.	161+06.48 64.58′ RT.	161+20.68 64.58′ RT.	161+34.88 64.58′ RT.	161+49.08 64.58′ RT.	161+63.27 64.58′ RT.	161+77.47 64.58′ RT.	161+91.67 64.58′ RT.
		685.90′	685.64′	685.45′	685.35′	685.07′	684.76′	684.43′	684.05′	683.64′	683.21′
	FACE OF PARAPET	- -	- -	- -	- -	- -	- -	- -	- -	- -	- -
		-	-	-	-	-	-	-	-	-	-

NOTES:

1. SCREED ELEVATIONS SHOWN REPRESENT THE THEORETICAL DECK SURFACE LOCATION PRIOR TO DEFLECTIONS CAUSED BY DECK PLACEMENT AND OTHER ANTICIPATED DEAD LOADS.
2. SEE SHEET 32/50 FOR DECK ELEVATION SCHEMATICS.
3. SCREED ELEVATIONS INCLUDE THE CONCRETE DEAD LOAD DEFLECTION TO ACCOUNT FOR THE ADDITIONAL PERMANENT DEAD LOADS ASSOCIATED WITH CONCRETE FILLED STAY IN PLACE FORMS.

NO.	DATE	DESCRIPTION
0	2019-03-13	RFC

ISSUE RECORD

DESIGN AGENCY
Michael Baker INTERNATIONAL
1111 SUPERIOR AVE E. SUITE 2300, CLEVELAND, OH 44114

DESIGNED	DRAWN	REVIEWED	DATE
EKW	EKW	JWB	3/01/19
CHECKED	REVISED	STRUCTURE FILE NUMBER	
MKB		1801518	

RECORD PLANS

DECK SCREED ELEVATION TABLE

CUY-010-1978R
OH-10 EASTBOUND OVER GCRTA BLUE AND GREEN LINES

RECORD PLANS

CUY-IR490/SR010-2.09/19.28
PID No. 96833

RECORD PLANS

BU-19 - GCRTA BLUE/GREEN BRIDGES & CATENARY MODIFICATIONS
...\Sheets\010_1978R_SD408.dgn 6/27/2019 4:57:54 PM Christopher.Lemley

TOP OF HAUNCH STATIONS, OFFSETS & ELEVATIONS

	ELEVATION LINE	℄ BRGS R.A.	1/8 SPAN	1/4 SPAN	3/8 SPAN	1/2 SPAN	5/8 SPAN	3/4 SPAN	FIELD SPLICE 1	7/8 SPAN	℄ BRGS PIER 1
SPAN 1	GIRDER G1	157+63.49 12.08′ RT.	157+77.26 12.08′ RT.	157+91.03 12.08′ RT.	158+04.80 12.08′ RT.	158+18.57 12.08′ RT.	158+32.34 12.08′ RT.	158+46.11 12.08′ RT.	158+47.56 12.08′ RT.	158+59.88 12.08′ RT.	158+73.66 12.08′ RT.
		683.43′	683.74′	684.03′	684.30′	684.55′	684.78′	685.00′	685.02′	685.23′	685.47′
	GIRDER G2	157+70.85 22.58′ RT.	157+85.62 22.58′ RT.	158+00.38 22.58′ RT.	158+15.15 22.58′ RT.	158+29.92 22.58′ RT.	158+44.69 22.58′ RT.	158+59.45 22.58′ RT.	158+59.65 22.58′ RT.	158+74.22 22.58′ RT.	158+88.99 22.58′ RT.
		683.35′	683.68′	684.00′	684.29′	684.55′	684.80′	685.04′	685.05′	685.29′	685.54′
	GIRDER G3	157+78.30 33.08′ RT.	157+94.09 33.08′ RT.	158+09.88 33.08′ RT.	158+25.67 33.08′ RT.	158+41.46 33.08′ RT.	158+57.25 33.08′ RT.	158+73.04 33.08′ RT.	158+75.78 33.08′ RT.	158+88.84 33.08′ RT.	159+04.63 33.08′ RT.
		683.28′	683.65′	683.99′	684.31′	684.59′	684.86′	685.10′	685.15′	685.36′	685.62′
	GIRDER G4	157+85.85 43.58′ RT.	158+02.69 43.58′ RT.	158+19.53 43.58′ RT.	158+36.37 43.58′ RT.	158+53.22 43.58′ RT.	158+70.06 43.58′ RT.	158+86.90 43.58′ RT.	158+91.91 43.58′ RT.	159+03.74 43.58′ RT.	159+20.59 43.58′ RT.
		683.21′	683.62′	684.01′	684.36′	684.67′	684.93′	685.18′	685.25′	685.43′	685.66′
	GIRDER G5	157+93.48 54.08′ RT.	158+11.41 54.08′ RT.	158+29.33 54.08′ RT.	158+47.26 54.08′ RT.	158+65.18 54.08′ RT.	158+83.11 54.08′ RT.	159+01.03 54.08′ RT.	159+05.89 54.08′ RT.	159+18.96 54.08′ RT.	159+36.88 54.08′ RT.
		683.26′	683.74′	684.18′	684.57′	684.89′	685.16′	685.40′	685.46′	685.61′	685.77′
	GIRDER G6	158+01.21 64.58′ RT.	158+20.25 64.58′ RT.	158+39.29 64.58′ RT.	158+58.33 64.58′ RT.	158+77.37 64.58′ RT.	158+96.41 64.58′ RT.	159+15.45 64.58′ RT.	159+28.19 64.58′ RT.	159+34.49 64.58′ RT.	159+53.53 64.58′ RT.
		683.40′	683.97′	684.47′	684.89′	685.23′	685.48′	685.68′	685.77′	685.81′	685.92′

	ELEVATION LINE	℄ BRGS PIER 1	1/8 SPAN	FIELD SPLICE 2	1/4 SPAN	3/8 SPAN	1/2 SPAN	5/8 SPAN	3/4 SPAN	FIELD SPLICE 3	7/8 SPAN	℄ BRGS PIER 2
SPAN 2	GIRDER G1	158+73.66 12.08′ RT.	158+91.46 12.08′ RT.	159+01.99 12.08′ RT.	159+09.27 12.08′ RT.	159+27.07 12.08′ RT.	159+44.88 12.08′ RT.	159+62.68 12.08′ RT.	159+80.49 12.08′ RT.	159+92.70 12.08′ RT.	159+98.30 12.08′ RT.	160+16.10 12.08′ RT.
		685.47′	685.82′	686.04′	686.18′	686.49′	686.71′	686.82′	686.83′	686.79′	686.77′	686.67′
	GIRDER G2	158+88.99 22.58′ RT.	159+06.38 22.58′ RT.	159+18.11 22.58′ RT.	159+23.77 22.58′ RT.	159+41.15 22.58′ RT.	159+58.54 22.58′ RT.	159+75.93 22.58′ RT.	159+93.32 22.58′ RT.	160+02.78 22.58′ RT.	160+10.71 22.58′ RT.	160+28.10 22.58′ RT.
		685.54′	685.87′	686.08′	686.17′	686.40′	686.55′	686.62′	686.59′	686.55′	686.50′	686.37′
	GIRDER G3	159+04.63 33.08′ RT.	159+21.58 33.08′ RT.	159+34.24 33.08′ RT.	159+38.54 33.08′ RT.	159+55.50 33.08′ RT.	159+72.46 33.08′ RT.	159+89.42 33.08′ RT.	160+06.38 33.08′ RT.	160+14.88 33.08′ RT.	160+23.34 33.08′ RT.	160+40.29 33.08′ RT.
		685.62′	685.89′	686.07′	686.12′	686.29′	686.39′	686.40′	686.34′	686.28′	686.21′	686.03′
	GIRDER G4	159+20.59 43.58′ RT.	159+37.10 43.58′ RT.	159+49.94 43.58′ RT.	159+53.61 43.58′ RT.	159+70.12 43.58′ RT.	159+86.63 43.58′ RT.	160+03.15 43.58′ RT.	160+19.66 43.58′ RT.	160+26.97 43.58′ RT.	160+36.17 43.58′ RT.	160+52.68 43.58′ RT.
		685.66′	685.87′	686.00′	686.03′	686.15′	686.19′	686.16′	686.05′	685.99′	685.88′	685.67′
	GIRDER G5	159+36.88 54.08′ RT.	159+52.93 54.08′ RT.	159+66.50 54.08′ RT.	159+68.98 54.08′ RT.	159+85.03 54.08′ RT.	160+01.08 54.08′ RT.	160+17.13 54.08′ RT.	160+33.18 54.08′ RT.	160+40.29 54.08′ RT.	160+49.23 54.08′ RT.	160+65.28 54.08′ RT.
		685.77′	685.92′	686.01′	686.03′	686.09′	686.08′	686.00′	685.85′	685.76′	685.64′	685.38′
	GIRDER G6	159+53.53 64.58′ RT.	159+69.10 64.58′ RT.	159+80.61 64.58′ RT.	159+84.67 64.58′ RT.	160+00.24 64.58′ RT.	160+15.81 64.58′ RT.	160+31.38 64.58′ RT.	160+46.94 64.58′ RT.	160+52.68 64.58′ RT.	160+62.51 64.58′ RT.	160+78.08 64.58′ RT.
		685.92′	686.01′	686.06′	686.07′	686.08′	686.03′	685.90′	685.70′	685.61′	685.44′	685.15′

	ELEVATION LINE	℄ BRGS PIER 2	1/8 SPAN	FIELD SPLICE 4	1/4 SPAN	3/8 SPAN	1/2 SPAN	5/8 SPAN	3/4 SPAN	7/8 SPAN	℄ BRGS F.A.
SPAN 3	GIRDER G1	160+16.10 12.08′ RT.	160+31.00 12.08′ RT.	160+41.08 12.08′ RT.	160+45.91 12.08′ RT.	160+60.81 12.08′ RT.	160+75.71 12.08′ RT.	160+90.61 12.08′ RT.	161+05.51 12.08′ RT.	161+20.42 12.08′ RT.	161+35.32 12.08′ RT.
		686.67′	686.58′	686.50′	686.46′	686.31′	686.09′	685.80′	685.42′	684.99′	684.54′
	GIRDER G2	160+28.10 22.58′ RT.	160+42.87 22.58′ RT.	160+53.18 22.58′ RT.	160+57.64 22.58′ RT.	160+72.41 22.58′ RT.	160+87.18 22.58′ RT.	161+01.95 22.58′ RT.	161+16.72 22.58′ RT.	161+31.48 22.58′ RT.	161+46.25 22.58′ RT.
		686.37′	686.24′	686.13′	686.08′	685.87′	685.61′	685.28′	684.89′	684.49′	684.07′
	GIRDER G3	160+40.29 33.08′ RT.	160+54.93 33.08′ RT.	160+65.27 33.08′ RT.	160+69.56 33.08′ RT.	160+84.19 33.08′ RT.	160+98.82 33.08′ RT.	161+13.45 33.08′ RT.	161+28.09 33.08′ RT.	161+42.72 33.08′ RT.	161+57.35 33.08′ RT.
		686.03′	685.86′	685.73′	685.66′	685.42′	685.13′	684.78′	684.41′	684.01′	683.59′
	GIRDER G4	160+52.68 43.58′ RT.	160+67.18 43.58′ RT.	160+79.38 43.58′ RT.	160+81.67 43.58′ RT.	160+96.16 43.58′ RT.	161+10.65 43.58′ RT.	161+25.14 43.58′ RT.	161+39.63 43.58′ RT.	161+54.12 43.58′ RT.	161+68.62 43.58′ RT.
		685.67′	685.46′	685.27′	685.23′	684.95′	684.64′	684.29′	683.92′	683.53′	683.11′
	GIRDER G5	160+65.28 54.08′ RT.	160+79.63 54.08′ RT.	160+91.08 54.08′ RT.	160+93.97 54.08′ RT.	161+08.32 54.08′ RT.	161+22.67 54.08′ RT.	161+37.01 54.08′ RT.	161+51.36 54.08′ RT.	161+65.71 54.08′ RT.	161+80.05 54.08′ RT.
		685.38′	685.14′	684.94′	684.88′	684.58′	684.27′	683.93′	683.57′	683.17′	682.74′
	GIRDER G6	160+78.08 64.58′ RT.	160+92.28 64.58′ RT.	161+01.56 64.58′ RT.	161+06.48 64.58′ RT.	161+20.68 64.58′ RT.	161+34.88 64.58′ RT.	161+49.08 64.58′ RT.	161+63.27 64.58′ RT.	161+77.47 64.58′ RT.	161+91.67 64.58′ RT.
		685.15′	684.89′	684.70′	684.60′	684.32′	684.01′	683.68′	683.30′	682.89′	682.46′

NOTES:

1. TOP OF HAUNCH ELEVATIONS SHOWN REPRESENT THE THEORETICAL DECK SURFACE LOCATION OF THE BOTTOM OF THE DECK ABOVE THE BEAM/GIRDER HAUNCH PRIOR TO DEFLECTIONS CAUSED BY DECK PLACEMENT AND OTHER ANTICIPATED DEAD LOADS.
2. SEE SHEET 32/50 FOR DECK ELEVATION SCHEMATICS.

NO.	DATE	DESCRIPTION
0	2019-03-13	RFC

ISSUE RECORD

DESIGN AGENCY
Michael Baker INTERNATIONAL
1111 SUPERIOR AVE E., SUITE 2300, CLEVELAND, OH 44114

DESIGNED	DRAWN	REVIEWED	DATE
EKW	EKW	JWB	3/01/19
CHECKED	REVISED	STRUCTURE FILE NUMBER	
MKB		1801518	

RECORD PLANS

TOP OF HAUNCH ELEVATION TABLE
CUY-010-1978R
OH-10 EASTBOUND OVER GCRTA BLUE AND GREEN LINES

RECORD PLANS

CUY-IR490/SR010-2.09/19.28
PID No. 96833

BU-19 - GCRTA BLUE/GREEN BRIDGES & CATENARY MODIFICATIONS
...\Sheets\010_1978R_SD409.dgn 6/27/2019 4:57:59 PM Christopher.Lemley

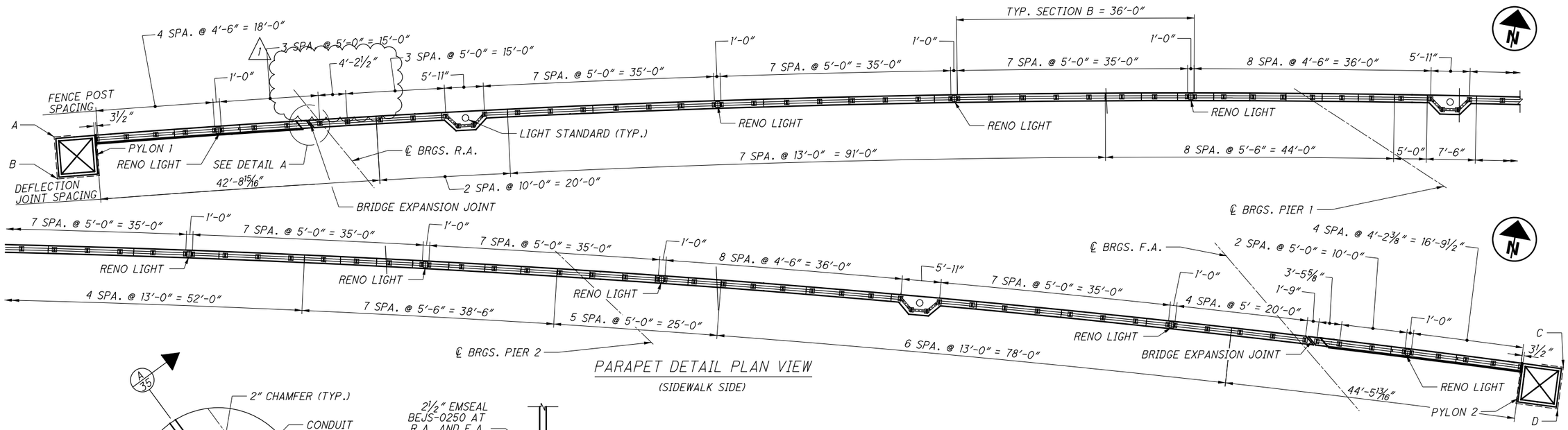

PARAPET DETAIL PLAN VIEW

(SIDEWALK SIDE)

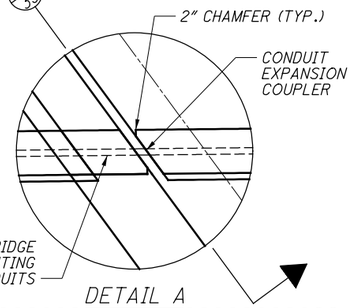

DETAIL A

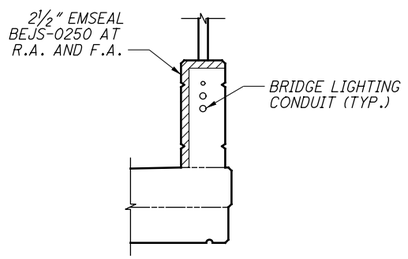

A 35 SECTION

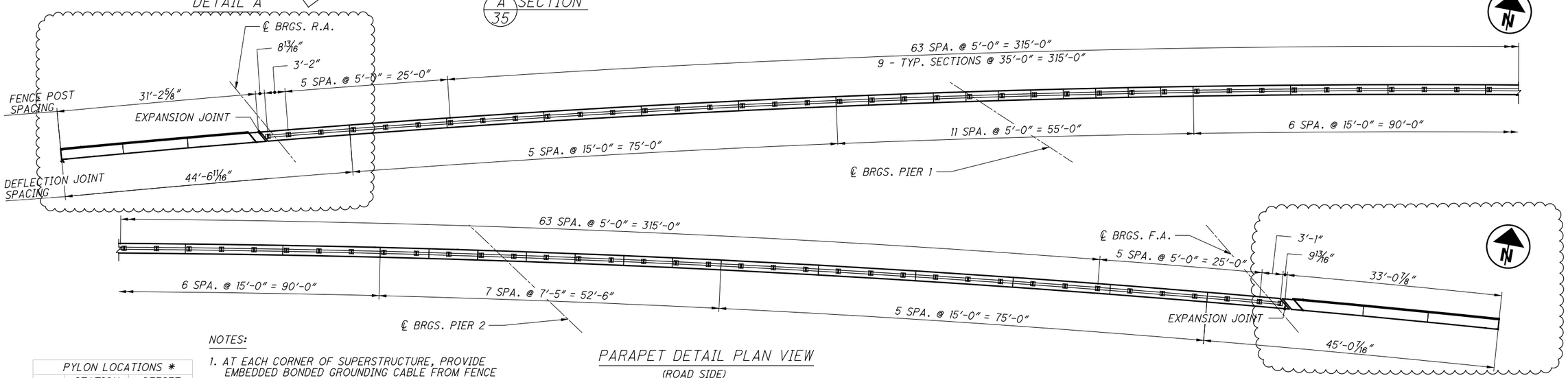

PARAPET DETAIL PLAN VIEW

(ROAD SIDE)

PYLON LOCATIONS *		
	STATION	OFFSET
A	157+61.46	66.75 RT
B	157+61.45	73.17 RT
C	162+36.95	66.75 RT
D	162+36.96	73.17 RT

* - PYLON LOCATION STATIONS ARE MEASURED TO CORNER OF FOUNDATION

NOTES:

1. AT EACH CORNER OF SUPERSTRUCTURE, PROVIDE EMBEDDED BONDED GROUNDING CABLE FROM FENCE ANCHOR BOLTS TO STUD PER STD. DWG. HL-50.21 PROVIDE EMBEDDED BONDED GROUNDING JUMPERS ACROSS ALL DISCONTINUOUS SECTIONS OF FENCE ON THE SUPERSTRUCTURE. PROVIDE BONDED GROUNDING JUMPERS ON THE EXTERIOR SIDE OF THE FENCE ACROSS ALL OPEN GAPS AT ABUTMENT EXPANSION JOINTS

2. DEAD END CONNECTIONS SHALL BE PLACED AT LEAST EVERY OTHER FENCE POST, ONLY ON THE ROADSIDE PARAPET.

NO.	DATE	DESCRIPTION
1	2024-09-10	RECORD DRAWINGS
0	2019-03-13	RFC

ISSUE RECORD

DESIGN AGENCY
Michael Baker INTERNATIONAL
1111 SUPERIOR AVE E. SUITE 2300, CLEVELAND, OH 44114

DESIGNED	DRAWN	REVIEWED	DATE
GMC	GMC	JWB	3/01/19
CHECKED	REVISED	STRUCTURE FILE NUMBER	
CDC		1801518	

RECORD PLANS

PARAPET DETAILS (1 OF 7)
CUY-010-1978R
OH-10 EASTBOUND OVER GCRTA BLUE AND GREEN LINES

RECORD PLANS

CUY-IR490/SR010-2.09/19.28
PID No. 96833

RECORD PLANS

BU-19 - GCRTA BLUE/GREEN BRIDGES & CATENARY MODIFICATIONS
...\Sheets\010_1978R_SA406.dgn 11/21/2024 5:28:31 PM Rohit.Bk

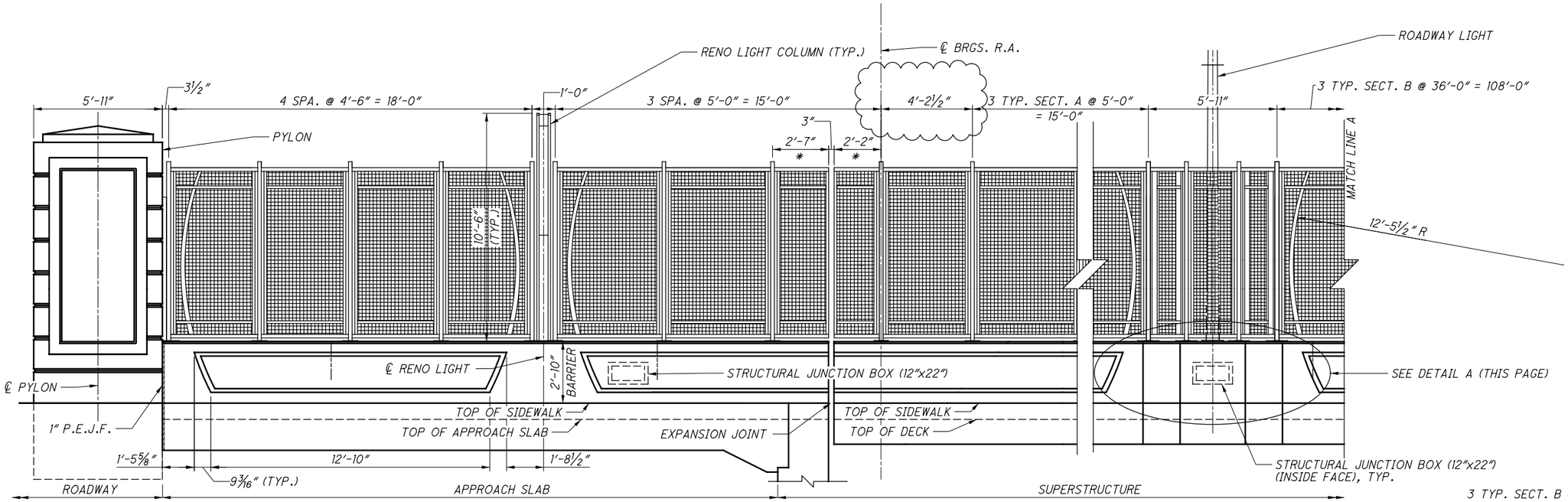

ELEVATION
(OUTSIDE FACE OF SIDEWALK PARAPET)

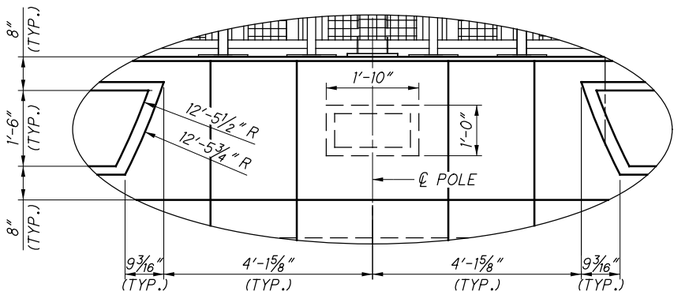

DETAIL A (THIS PAGE)

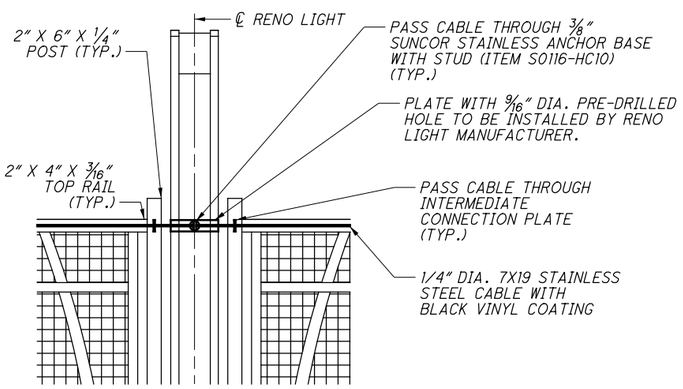

CABLE SYSTEM CONNECTION AT INTERMEDIATE RENO LIGHTS
(TOP SHOWN, BOTTOM SIMILAR)

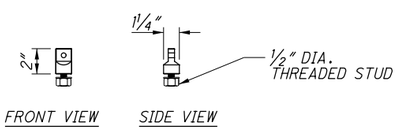

ANCHOR BASE WITH STUD DIAGRAM
(⅜" NOMINAL SIZE (SUNCOR STAINLESS ITEM S0116-HC10)

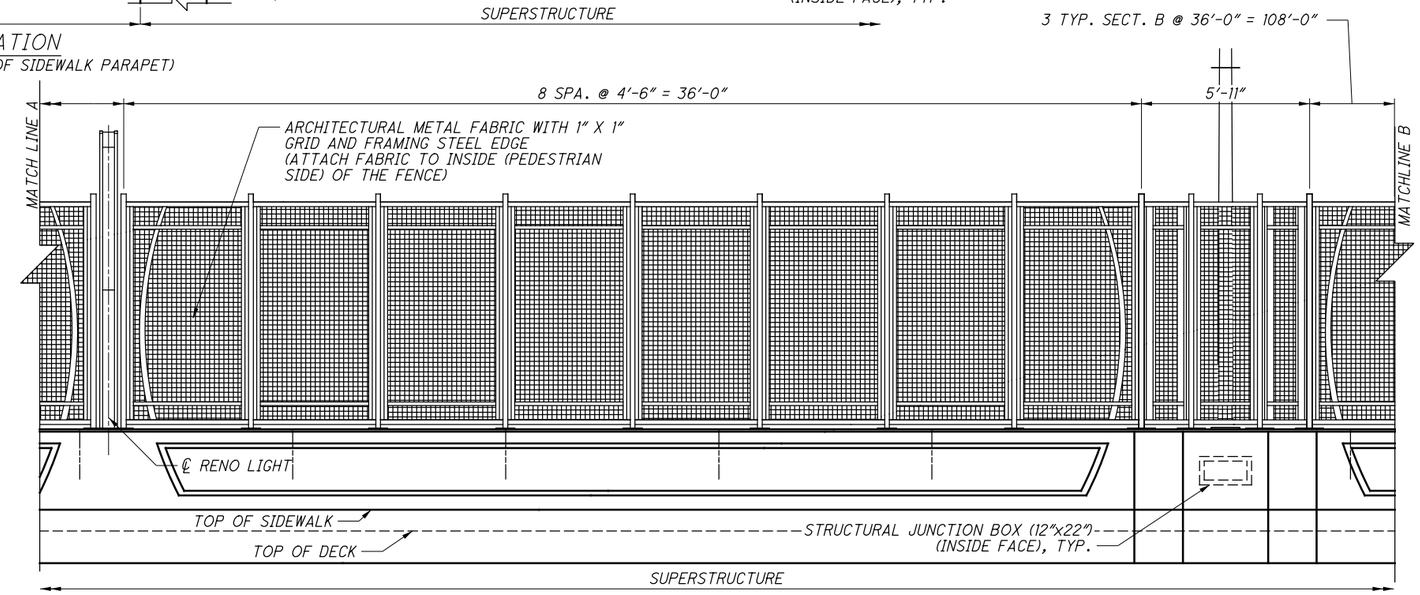

ELEVATION
(CONTINUED OUTSIDE FACE OF SIDEWALK PARAPET)

NOTES:

1. FOR ADDITIONAL RAILING SAWCUT DETAILS, SEE ODOT STANDARD DRAWING BR-2-15
2. FOR SAWCUT SPACING, SEE PLAN SHEET (35/50)
3. FOR PYLON DETAILS, SEE SHEET (45/ 50)
4. FOR REINFORCING SCHEDULE, SEE SHEET (49/50)
5. RENO LIGHT COLUMNS ARE BY HESSAMERICA, PRODUCT CODE: REN3200-LED2-10RB-GG OR APPROVED EQUAL. CONDUIT SHALL BE EMBEDDED AND NOT VISIBLE.
6. FOR ADDITIONAL DETAILS NOT LABELED, SEE PLAN SHEET (35/50)

LEGEND

* - PORTION OF RAILING IS TO BE CANTILEVERED OVER EXPANSION JOINT

NO.	DATE	DESCRIPTION
1	2024-09-10	RECORD DRAWINGS
0	2019-03-13	RFC

ISSUE RECORD

DESIGN AGENCY
Michael Baker INTERNATIONAL
1111 SUPERIOR AVE E., SUITE 2300, CLEVELAND, OH 44114

DESIGNED	DRAWN	REVIEWED	DATE
GMC	GMC	JWB	3/01/19
CHECKED	REVISED	STRUCTURE FILE NUMBER	
CDC		1801518	

RECORD PLANS

PARAPET DETAILS (2 OF 7)
CUY-010-1978R
OH-10 EASTBOUND OVER GCRTA BLUE AND GREEN LINES

RECORD PLANS

CUY-IR490/SR010-2.09/19.28
PID No. 96833

RECORD PLANS

BU-19 - GCRTA BLUE/GREEN BRIDGES & CATENARY MODIFICATIONS
...\Sheets\010_1978R_SA402.dgn 11/21/2024 4:40:41 PM Rohit.Bk

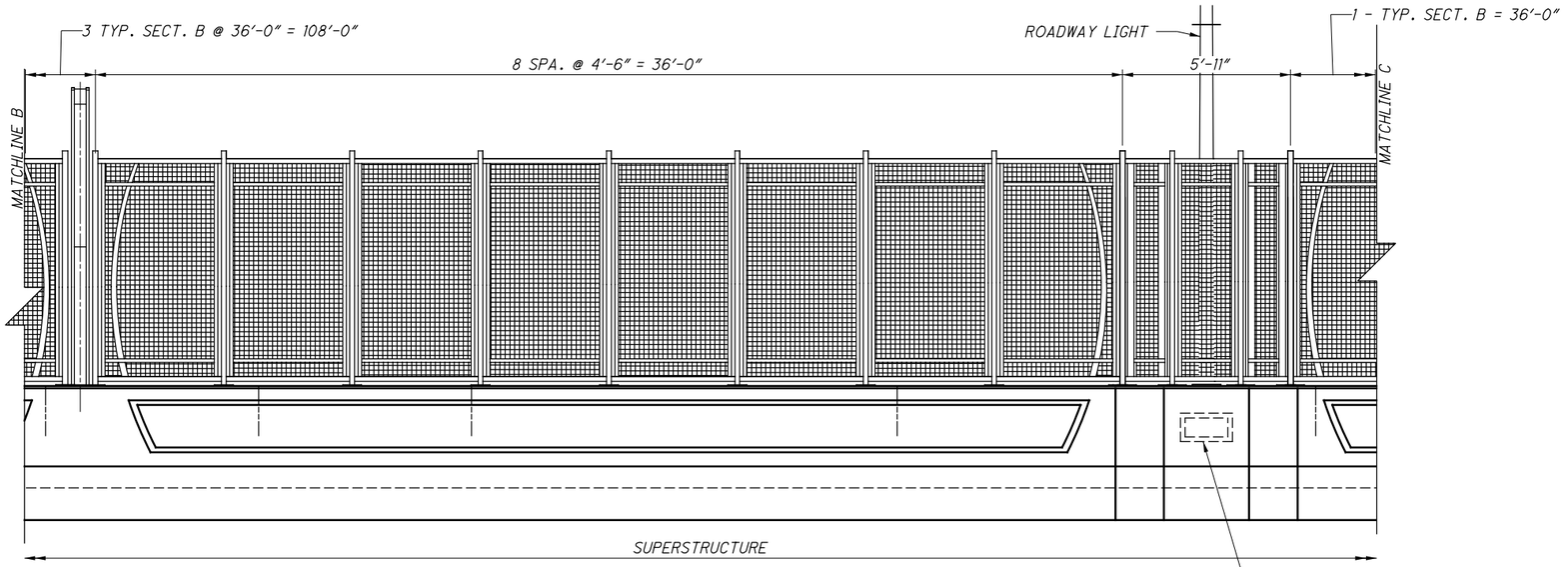

ELEVATION

(CONTINUED OUTSIDE FACE OF SIDEWALK PARAPET)

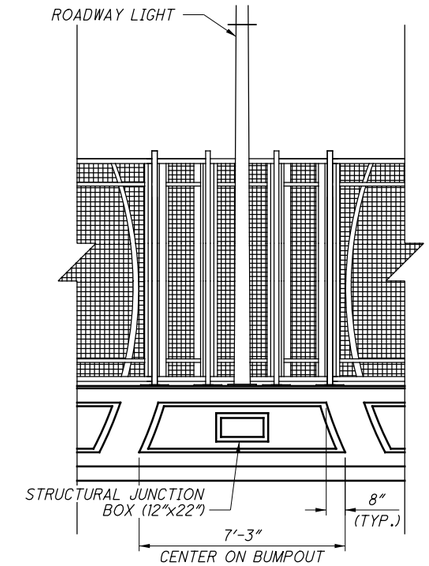

ROADWAY LIGHT PARAPET DETAIL

(INSIDE FACE OF PARAPET)

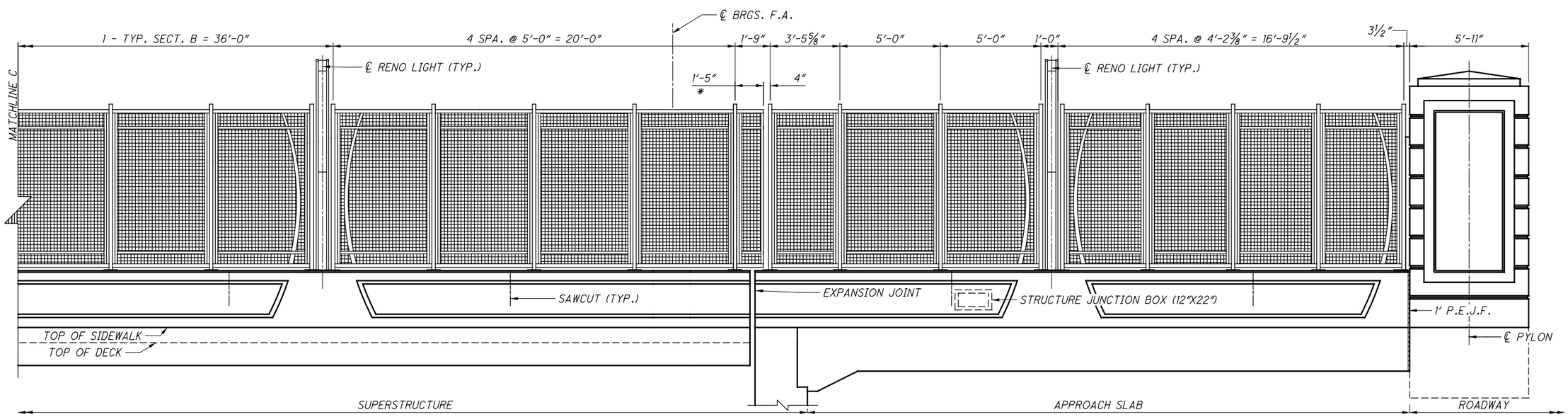

ELEVATION

(CONTINUED OUTSIDE FACE OF SIDEWALK PARAPET)

NOTES:

1. FOR ADDITIONAL RAILING SAWCUT DETAILS, SEE ODOT STANDARD DRAWING BR-2-15
2. FOR SAWCUT SPACING, SEE PLAN SHEET (35/50)
3. FOR PYLON DETAILS, SEE SHEET (45/50)
4. FOR REINFORCING SCHEDULE, SEE SHEET (49/50)
5. RENO LIGHT COLUMNS ARE BY HESSAMERICA, PRODUCT CODE: REN3200-LED2-10RB-GG OR APPROVED EQUAL. CONDUIT SHALL BE EMBEDDED AND NOT VISIBLE.
6. FOR ADDITIONAL DETAILS NOT LABELED, SEE PLAN SHEET (35/50)

LEGEND

* - PORTION OF RAILING IS TO BE CANTILEVERED OVER EXPANSION JOINT

NO.	DATE	DESCRIPTION
1	2019-05-17	DC006
0	2019-06-20	RFC

ISSUE RECORD

DESIGN AGENCY
Michael Baker INTERNATIONAL
1111 SUPERIOR AVE E., SUITE 2300, CLEVELAND, OH 44114

DESIGNED	DRAWN	REVIEWED	DATE
GMC	GMC	JWB	3/01/19
CHECKED	REVISED	STRUCTURE FILE NUMBER	
CDC		1801518	

RECORD PLANS

PARAPET DETAILS (3 OF 7)

CUY-010-1978R

OH-10 EASTBOUND OVER GCRTA BLUE AND GREEN LINES

RECORD PLANS

CUY-IR490/SR010-2.09/19.28

PID No. 96833

RECORD PLANS

BU-19 - GCRTA BLUE/GREEN BRIDGES & CATENARY MODIFICATIONS

...\Sheets\010_1978R_SA403.dgn 6/27/2019 4:58:21 PM Christopher.Lemley

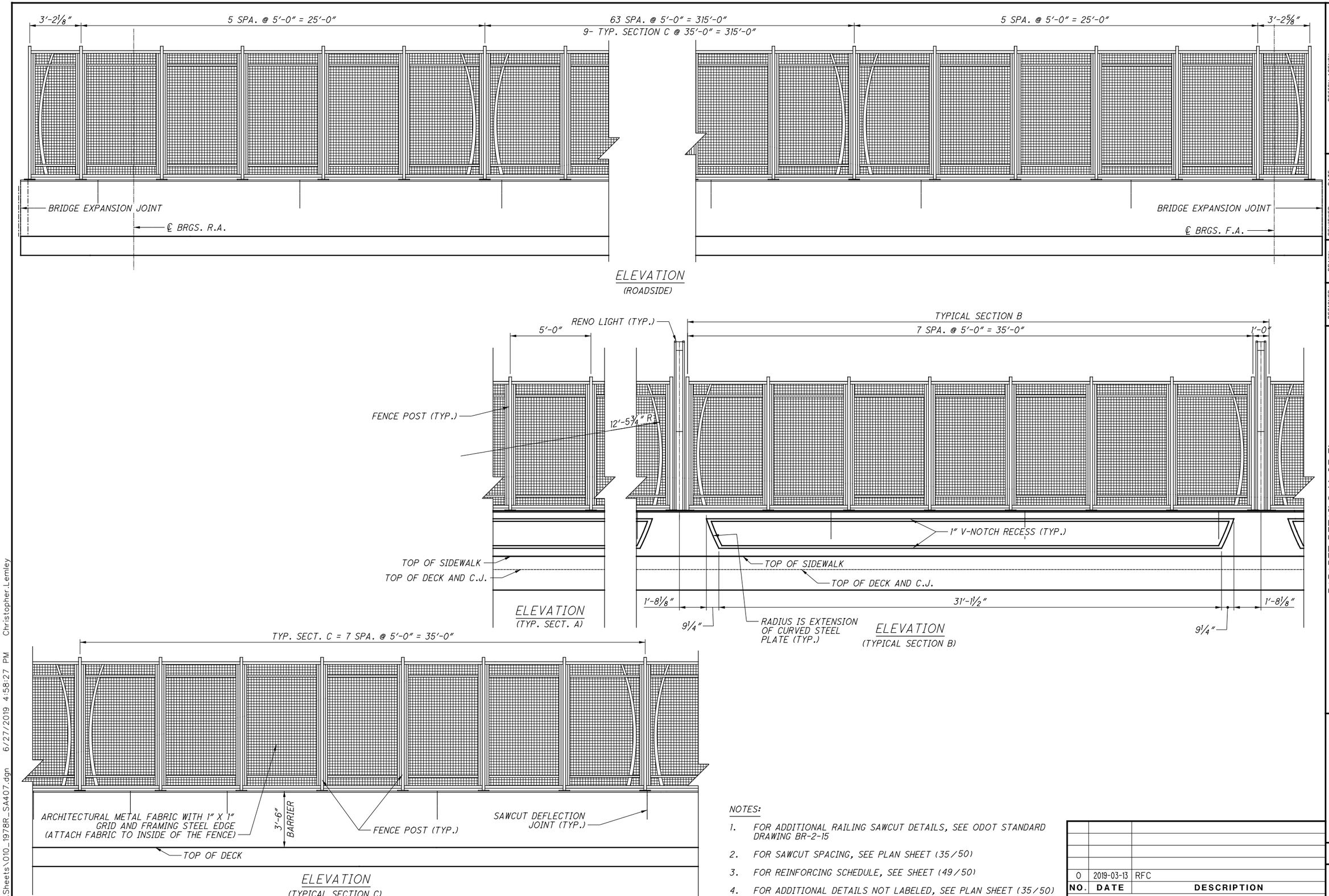

NOTES:

1. FOR ADDITIONAL RAILING SAWCUT DETAILS, SEE ODOT STANDARD DRAWING BR-2-15
2. FOR SAWCUT SPACING, SEE PLAN SHEET (35/50)
3. FOR REINFORCING SCHEDULE, SEE SHEET (49/50)
4. FOR ADDITIONAL DETAILS NOT LABELED, SEE PLAN SHEET (35/50)

NO.	DATE	DESCRIPTION
0	2019-03-13	RFC

ISSUE RECORD

DESIGN AGENCY
Michael Baker INTERNATIONAL
1111 SUPERIOR AVE E., SUITE 2300, CLEVELAND, OH 44114

DESIGNED	DRAWN	REVIEWED	DATE
GMC	GMC	JWB	3/01/19
CHECKED	REVISED	STRUCTURE FILE NUMBER	
CDC		1801518	

RECORD PLANS

PARAPET DETAILS (4 OF 7)
CUY-010-1978R
OH-10 EASTBOUND OVER GCRTA BLUE AND GREEN LINES

RECORD PLANS

CUY-IR490/SR010-2.09/19.28
PID No. 96833

RECORD PLANS

BU-19 - GCRTA BLUE/GREEN BRIDGES & CATENARY MODIFICATIONS
...\Sheets\010_1978R_SA407.dgn 6/27/2019 4:58:27 PM Christopher.Lemley

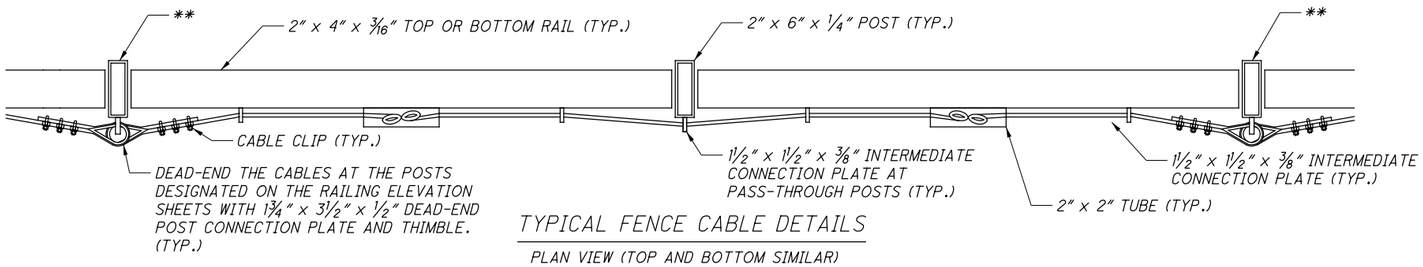

TYPICAL FENCE CABLE DETAILS

PLAN VIEW (TOP AND BOTTOM SIMILAR)

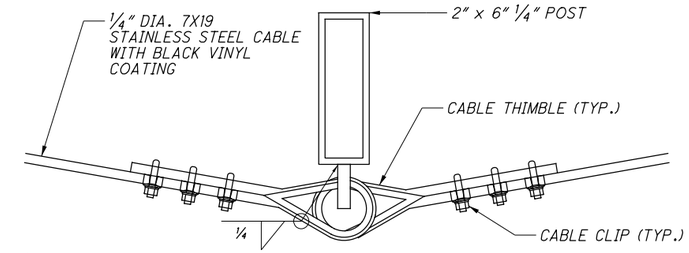

TYPICAL DEAD-END CONNECTION POST CONNECTION

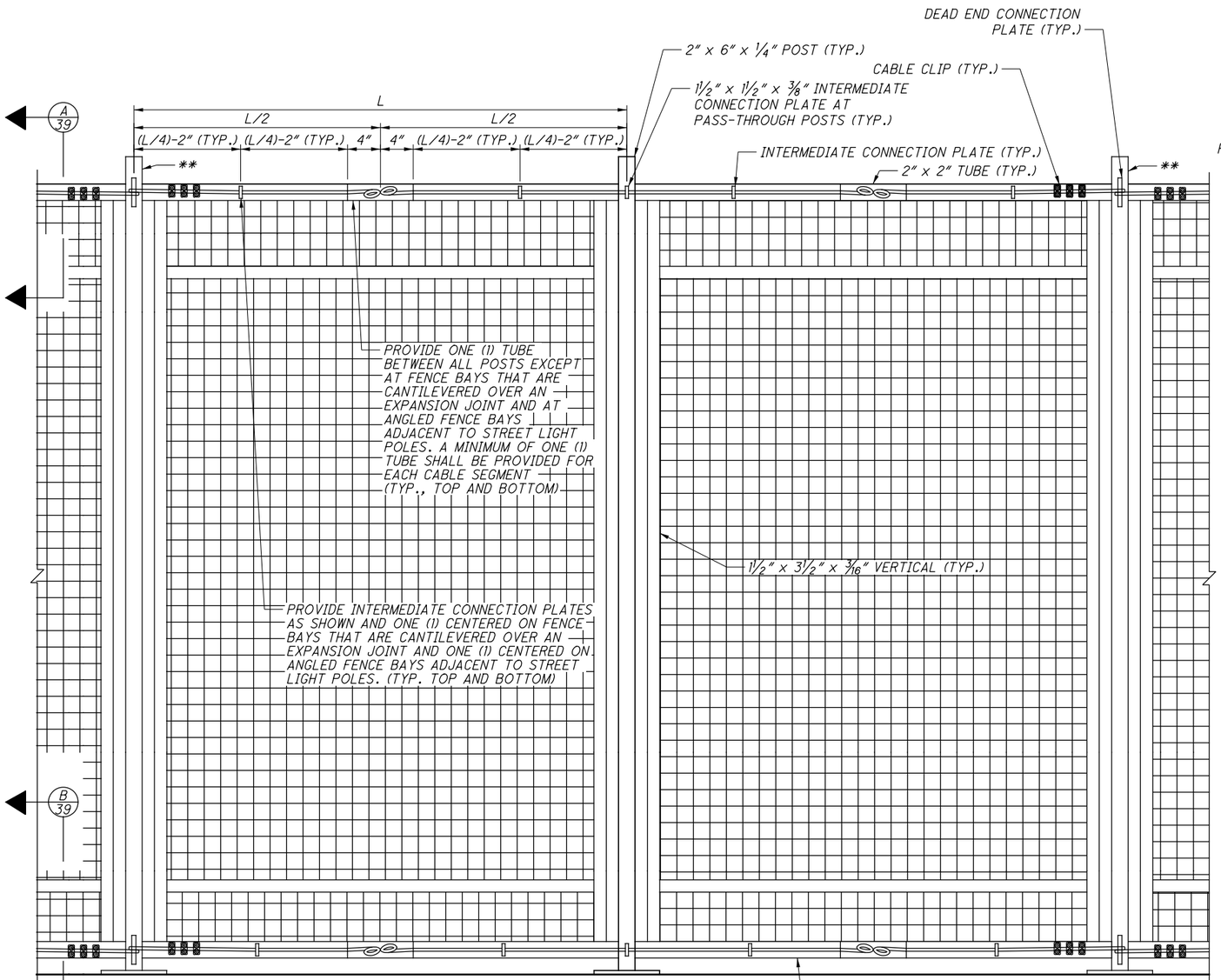

TYPICAL FENCE CABLE DETAILS

ELEVATION VIEW (BACK SIDE OF FENCE)

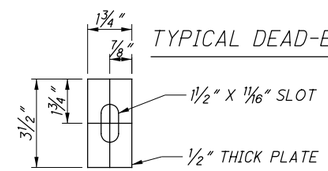

DEAD-END CONNECTION PLATE DETAIL

PROVIDE 1/8" CHAMFER ON PROJECTING CORNERS OF PLATE

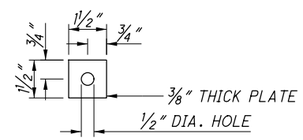

INTERMEDIATE CONNECTION PLATE DETAIL

PROVIDE 1/8" CHAMFER ON PROJECTING CORNERS OF PLATE

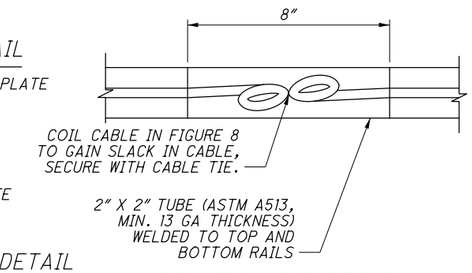

COILED CABLE DETAIL

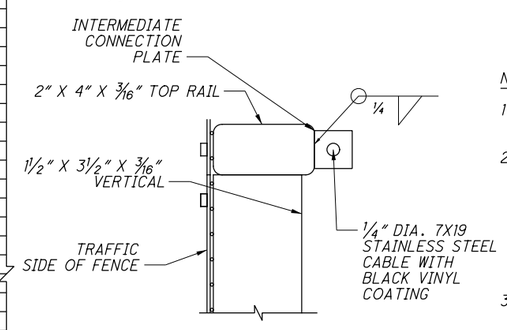

A 39 SECTION

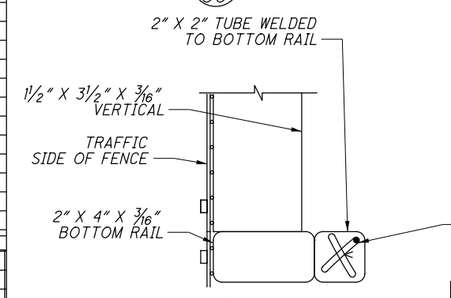

B 39 SECTION

NOTES:

1. STAINLESS STEEL CABLES TO BE INSTALLED ONLY ON THE SBR-1-13 BRIDGE RAILING.
2. PROVIDE 1/4" DIA. 7x19 304 STAINLESS STEEL AIRCRAFT CABLE WITH BLACK VINYL COATING TO 5/16" FINAL THICKNESS (PART #2S9250 AS MANUFACTURED BY FEHR BROS. INDUSTRIES INC.). INSTALL THE CABLE TO BE SNUG TIGHT WITHOUT SAG AND HAVING A TIGHT FIT OF CABLE COIL WITHIN THE 2" X 2" TUBING.
3. PROVIDE AND INSTALL 1/4" 304 STAINLESS STEEL CABLE CLIPS AND 5/16" 304 STAINLESS STEEL STANDARD DUTY CABLE THIMBLES (PART #SWRC250 AND PART #STH312SD, RESPECTIVELY, AS MANUFACTURED BY FEHR BROS. INDUSTRIES INC.) PER THE MANUFACTURER'S INSTRUCTIONS. REMOVE THE CABLE'S VINYL COATING AT CABLE CLIP LOCATIONS. FIELD PAINT ALL UNCOATED HARDWARE AND EXPOSED CABLE BLACK TO MATCH FENCE.
4. FOR WIRE CONNECTION DETAILS AT RENO LIGHTS, SEE SHEET 36/50 .
5. DEAD END CONNECTIONS SHALL BE PLACED AT LEAST EVERY OTHER FENCE POST.

LEGEND:

** - POST REQUIRING DEAD END CABLE CONNECTION

NO.	DATE	DESCRIPTION
0	2019-03-13	RFC

ISSUE RECORD

DESIGN AGENCY
Michael Baker INTERNATIONAL
1111 SUPERIOR AVE E., SUITE 2300, CLEVELAND, OH 44114

DESIGNED	DRAWN	REVIEWED	DATE
GMC	GMC	JWB	3/01/19
CHECKED	REVISED	STRUCTURE FILE NUMBER	
CDC		1801518	

RECORD PLANS

PARAPET DETAILS (5 OF 7)
CUY-010-1978R
OH-10 EASTBOUND OVER GCRTA BLUE AND GREEN LINES

RECORD PLANS

CUY-IR490/SR010-2.09/19.28
PID No. 96833

RECORD PLANS

BU-19 - GCRTA BLUE/GREEN BRIDGES & CATENARY MODIFICATIONS
...\Sheets\010_1978R_SA404.dgn 6/27/2019 4:58:33 PM Christopher.Lemley

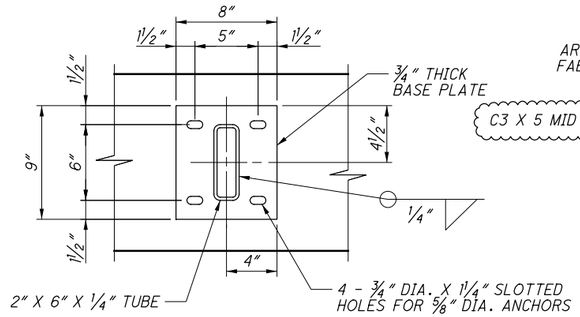

TYPICAL MID-POST BASE PLATE DETAIL

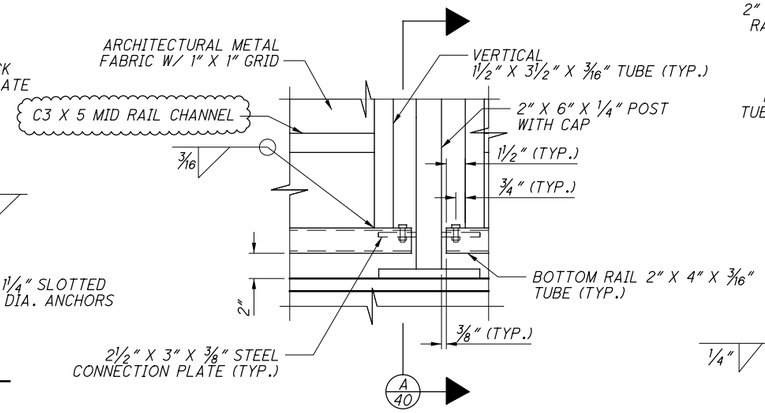

DETAIL 1 (41 /50)

(FENCE FABRIC FASTENERS NOT SHOWN)

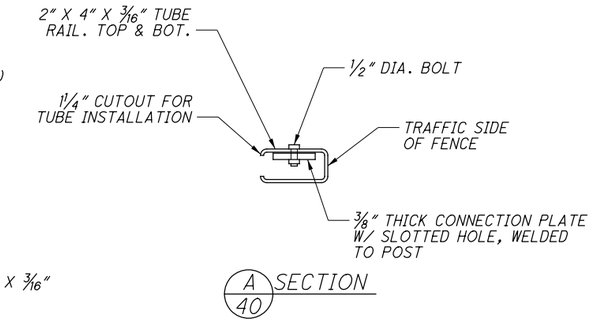

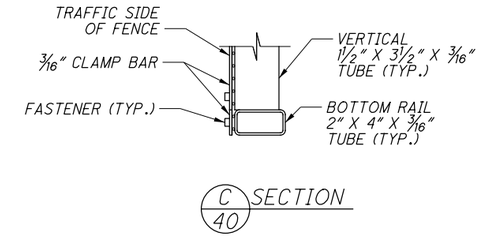

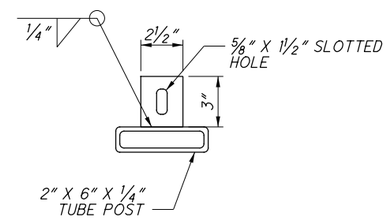

CONNECTION PLATE DETAILS

(PLAN VIEW)

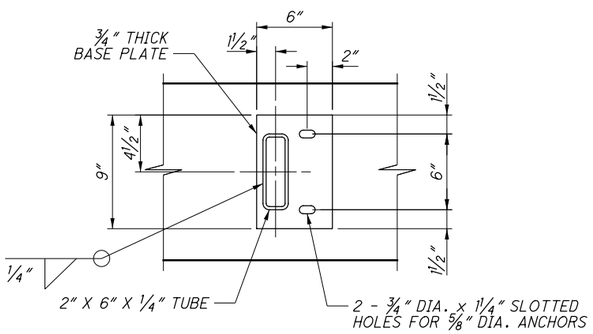

TYPICAL END POST BASE PLATE DETAIL

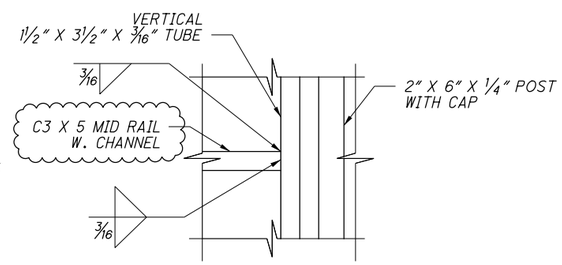

DETAIL 2 (41 / 50)

(FENCE FABRIC FASTENERS NOT SHOWN)

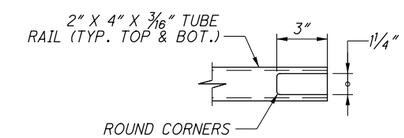

TYPICAL TUBE CUTOUT DETAIL

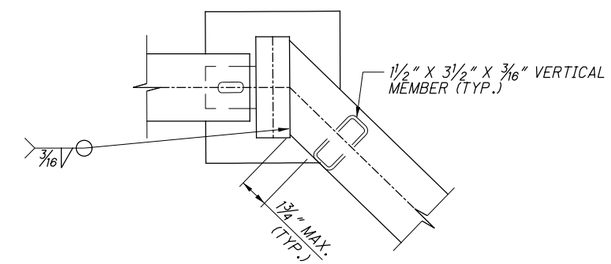

PILASTER AREA POST/RAIL DETAIL

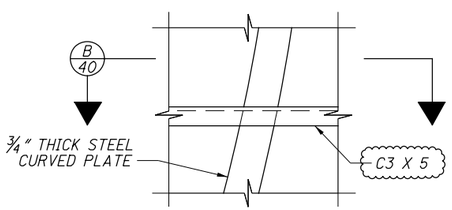

DETAIL 4 (41 /50)

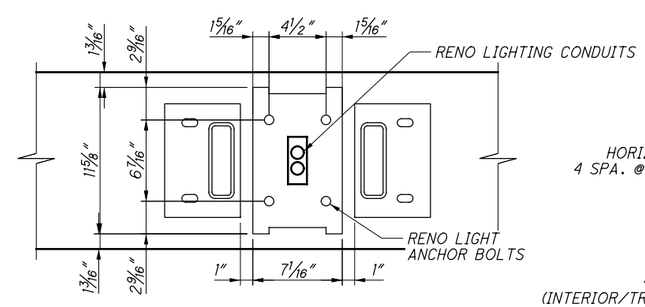

DETAIL 3 (41 /50)

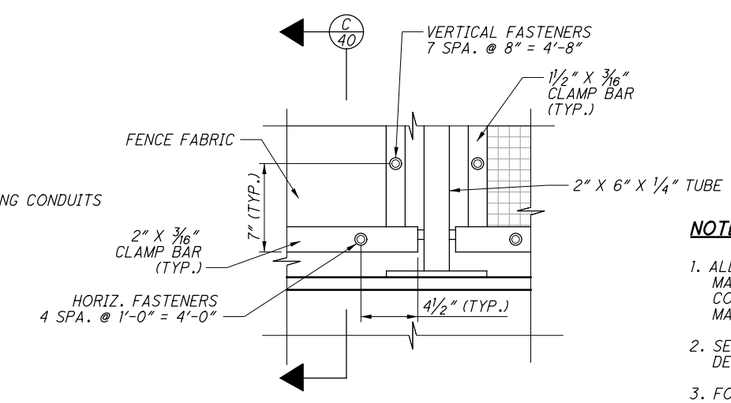

FENCE FABRIC CONNECTION ELEVATION DETAIL

(INTERIOR/TRAFFIC SIDE SHOWN, SPACING FOR STD PANEL SHOWN, OTHERS SIMILAR)

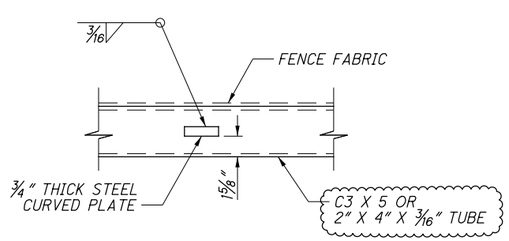

B 40 SECTION

NOTES:

1. ALL POSTS SHALL BE INSTALLED PLUMB. PROVIDE SHIMS MADE FROM MULTI-POLYMER PLASTIC WITH MINIMUM COMPRESSIVE STRENGTH OF 5,000 PSI. ENDS OF POSTS MAY BE CUT ON BIAS TO PROVIDE PLUMB INSTALLATION.
2. SEE STD. DWG. VPF-1-90 FOR ADDITIONAL NOTES AND DETAILS RELATED TO BASE PLATE SHIMS AND CAULKING.
3. FOR CURVED STEEL PLATE DETAILS, SEE SHEET 41/50 .
4. PROVIDE GROUNDING OF RENO LIGHT ANCHOR BOLTS PER STD. DWG. HL-50.21.
5. SPACING OF HORIZONTAL FASTENERS VARIES ON CANTILEVERED SECTIONS.

NO.	DATE	DESCRIPTION
1	2024-09-10	RECORD DRAWINGS
0	2019-03-13	RFC

ISSUE RECORD

DESIGN AGENCY
Michael Baker INTERNATIONAL
1111 SUPERIOR AVE E., SUITE 2300, CLEVELAND, OH 44114

DESIGNED	DRAWN	REVIEWED	DATE
GMC	GMC	JWB	3/01/19
CHECKED	REVISED	STRUCTURE FILE NUMBER	
CDC		1801518	

RECORD PLANS

PARAPET DETAILS (6 OF 7)
CUY-010-1978R
OH-10 EASTBOUND OVER GCRTA BLUE AND GREEN LINES

CUY-IR490/SR010-2.09/19.28
PID No. 96833

RECORD PLANS

BU-19 - GCRTA BLUE/GREEN BRIDGES & CATENARY MODIFICATIONS
...\Sheets\010_1978R_SA405.dgn 11/21/2024 5:27:30 PM Rohit.Bk

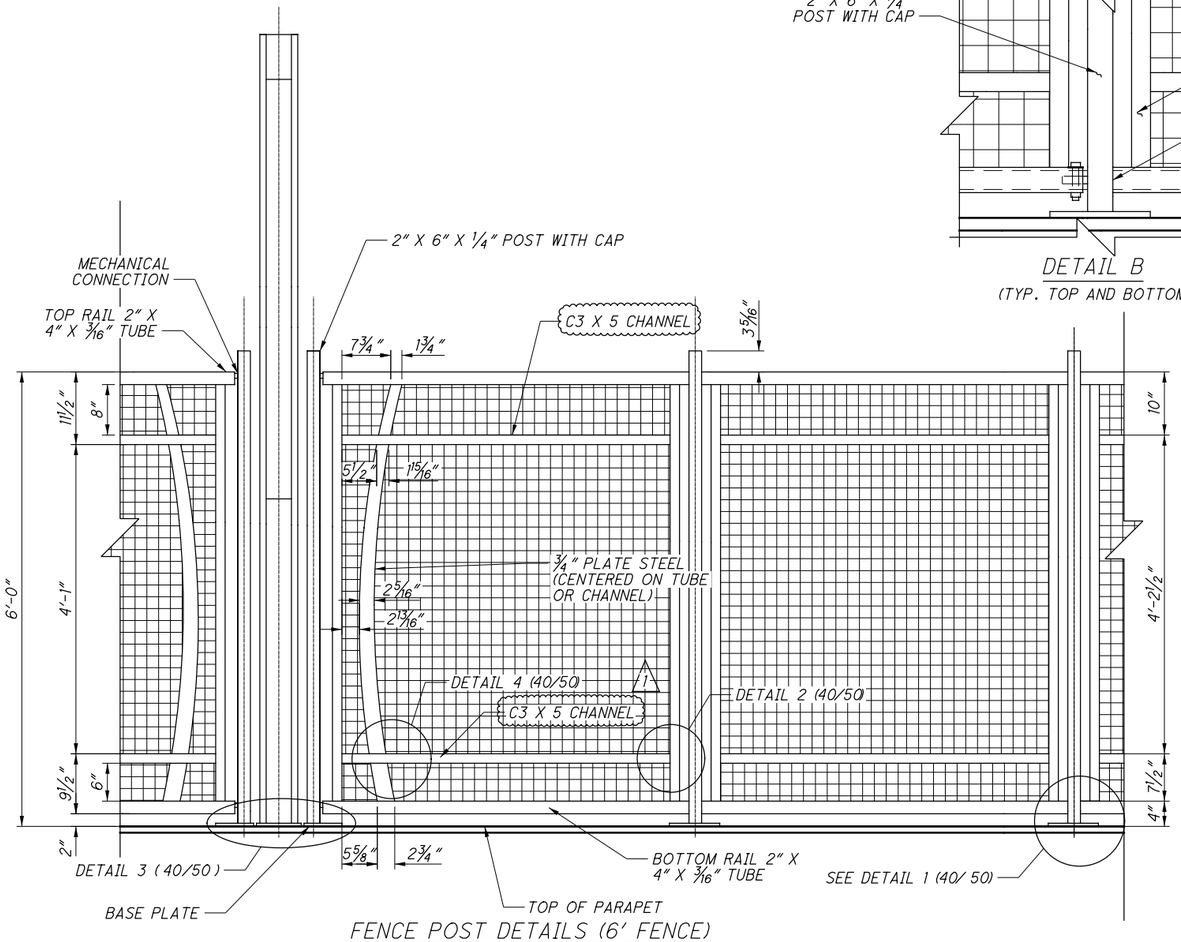

FENCE POST DETAILS (6' FENCE)

(PLACE FABRIC ON INSIDE, PEDESTRIAN SIDE OF FENCE)
(FENCE FABRIC FASTENERS NOT SHOWN)

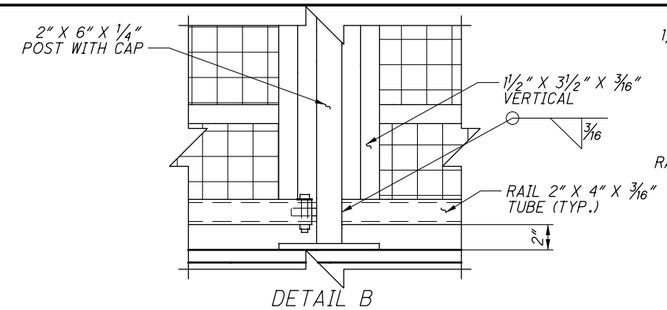

DETAIL B

(TYP. TOP AND BOTTOM)

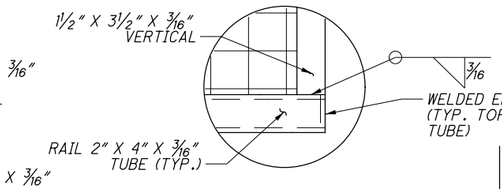

DETAIL A

(TYP. TOP AND BOTTOM)

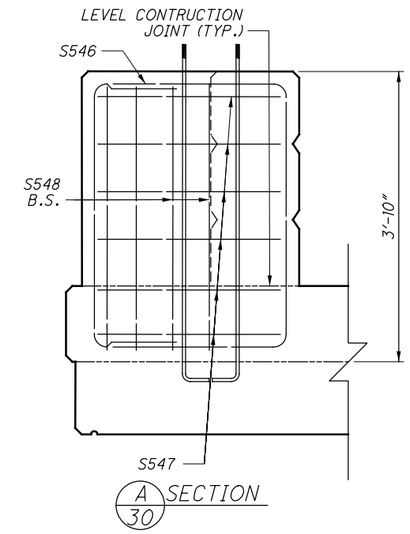

A SECTION 30

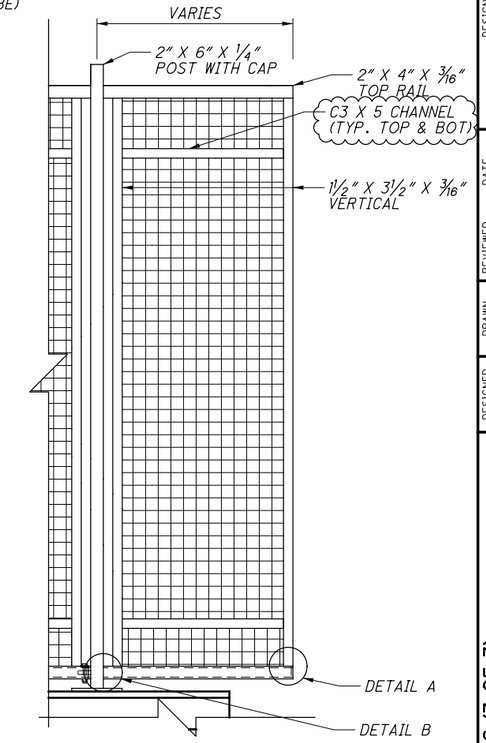

TYPICAL CANTILEVERED FENCE PANEL ELEVATION DETAIL

(PLACE FABRIC ON TRAFFIC SIDE, FENCE FABRIC FASTENER NOT SHOWN)

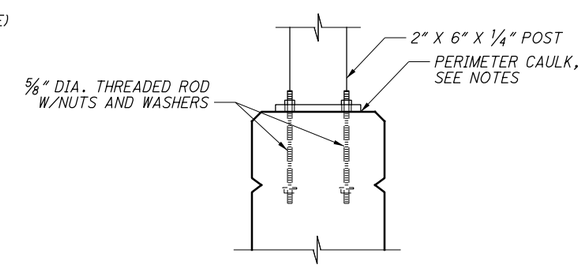

TYPICAL ANCHOR BOLT DETAILS

THREADED ROD SHALL BE ASTM A320 B8
CLASS 2 HARDENED STAINLESS STEEL (AISI 304),
Fy=100 KSI, WITH ASTM A194 GRADE 8
NUTS AND SS304 WASHERS

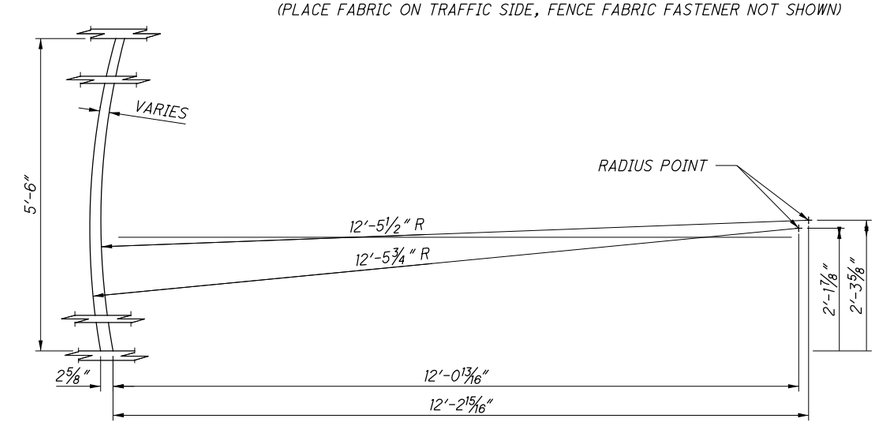

TYPICAL CURVED STEEL PLATE DETAIL

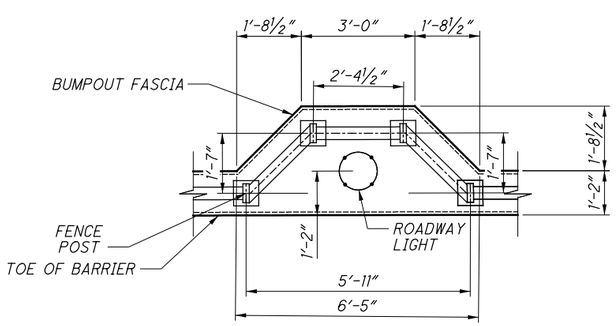

TYPICAL LIGHTPOLE PILASTER

NOTES:

1. FOR ADDITIONAL RAILING SAWCUT DETAILS, SEE ODOT STANDARD DRAWING BR-2-15
2. FOR SAWCUT SPACING, SEE PLAN SHEET (35/50)
3. FOR REINFORCING SCHEDULE, SEE SHEET (49/50)
4. FOR ADDITIONAL DETAILS NOT LABELED, SEE PLAN SHEET (35/50)
5. FOR ADDITIONAL PILASTER DETAILS NOT SHOWN, SEE ODOT STANDARD DRAWING HL-20.14

NO.	DATE	DESCRIPTION
1	2024-09-10	RECORD DRAWINGS
0	2019-03-13	RFC

ISSUE RECORD

DESIGN AGENCY
Michael Baker INTERNATIONAL
1111 SUPERIOR AVE E., SUITE 2300, CLEVELAND, OH 44114

DESIGNED	DRAWN	REVIEWED	DATE
GMC	GMC	JWB	3/01/19
CHECKED	REVISED	STRUCTURE FILE NUMBER	
CDC		1801518	

RECORD PLANS

PARAPET DETAILS (7 OF 7)
CUY-010-1978R
OH-10 EASTBOUND OVER GCRTA BLUE AND GREEN LINES

RECORD PLANS

CUY-IR490/SR010-2.09/19.28
PID No. 96833

RECORD PLANS

BU-19 - GCRTA BLUE/GREEN BRIDGES & CATENARY MODIFICATIONS
...\Sheets\010_1978R_SA408.dgn 12/11/2024 5:06:34 PM Rohit.Bk

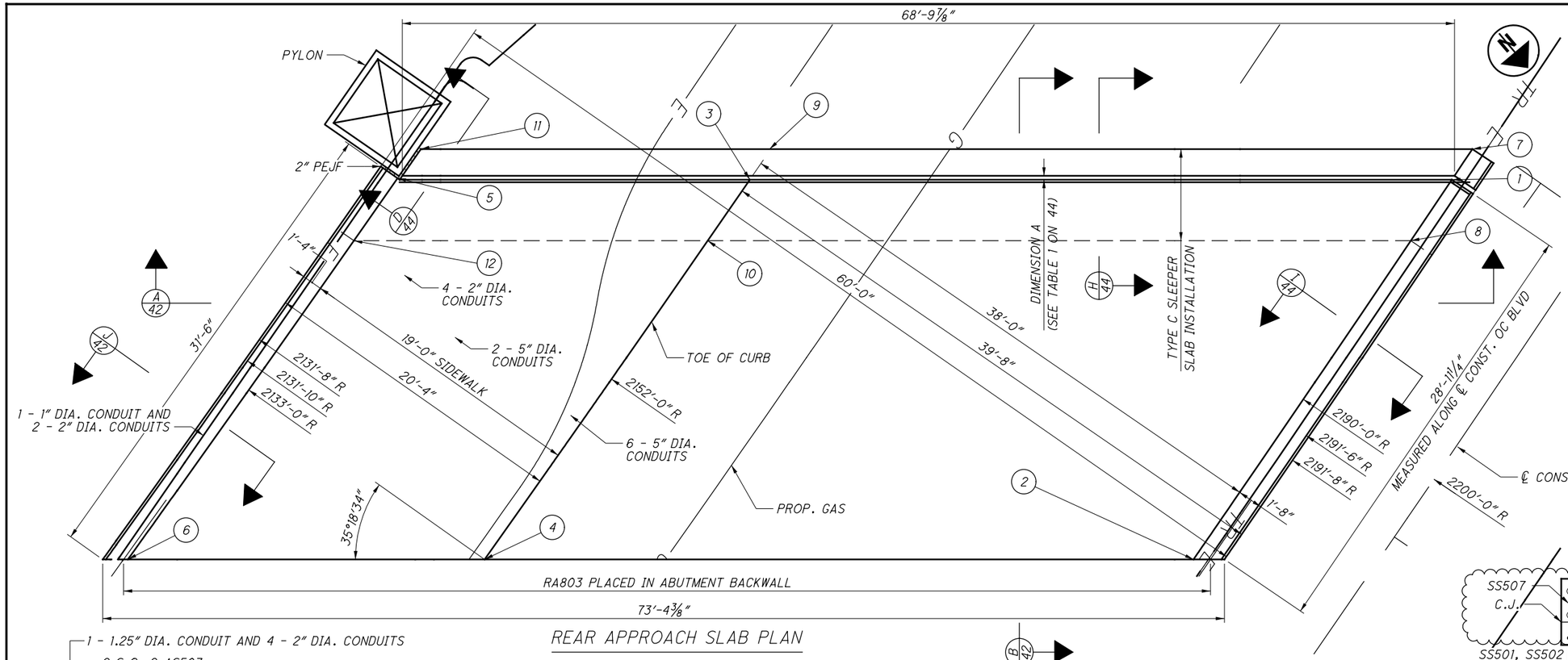

APPROACH SLAB SURFACE STATIONS, OFFSETS, AND ELEVATIONS			
1	157+28.48	10' RT	683.57
2	157+58.68	10' RT	684.13
3	157+54.61	48' RT	683.30
4	157+85.60	48' RT	683.87
5	157+67.99	67' RT	684.59
6	157+99.51	67' RT	685.17

SLEEPER SLAB SURFACE STATIONS, OFFSETS, AND ELEVATIONS			
7	157+26.06	10' RT	683.53
8	157+33.32	10' RT	683.66
9	157+52.13	48' RT	683.25
10	157+59.58	48' RT	693.39
11	157+65.48	66.84' RT	684.54
12	157+73.14	67' RT	684.68

NOTES:

1. APPROACH SLAB AND SLEEPER SLAB LONGITUDINAL BARS SHALL BE PLACED PARALLEL TO THE ROADWAY CENTERLINE. TRANSVERSE BARS SHALL BE PLACED PARALLEL TO THE ABUTMENT.
2. FOR INFORMATION NOT SHOWN SEE STANDARD BRIDGE DRAWING AS-1-15 AND AS-2-15.
3. FOR PYLON DETAILS, SEE SHEET 45 OF 50.
4. PROVIDE 2" CONCRETE COVER ON REINFORCEMENT BARS UNLESS NOTED OTHERWISE.

NO.	DATE	DESCRIPTION
2	2024-09-10	RECORD DRAWINGS
1	2021-05-18	DC056
0	2019-06-20	RFC

ISSUE RECORD

DESIGN AGENCY
Michael Baker INTERNATIONAL
1111 SUPERIOR AVE E., SUITE 2300, CLEVELAND, OH 44114

DESIGNED	DRAWN	REVIEWED	DATE
KAG	GMC	JWB	3/15/19
CHECKED	REVISED	STRUCTURE FILE NUMBER	
ETB		1801518	

RECORD PLANS

REAR APPROACH SLAB DETAILS
CUY-010-1978R
OH-10 EASTBOUND OVER GCRTA BLUE AND GREEN LINES

RECORD PLANS

CUY-IR490/SR010-2.09/19.28
PID No. 96833

RECORD PLANS

BU-19 - GCRTA BLUE/GREEN BRIDGES & CATENARY MODIFICATIONS
...\Sheets\010_1978R_SM401.dgn 11/21/2024 4:41:18 PM Rohit.Bk

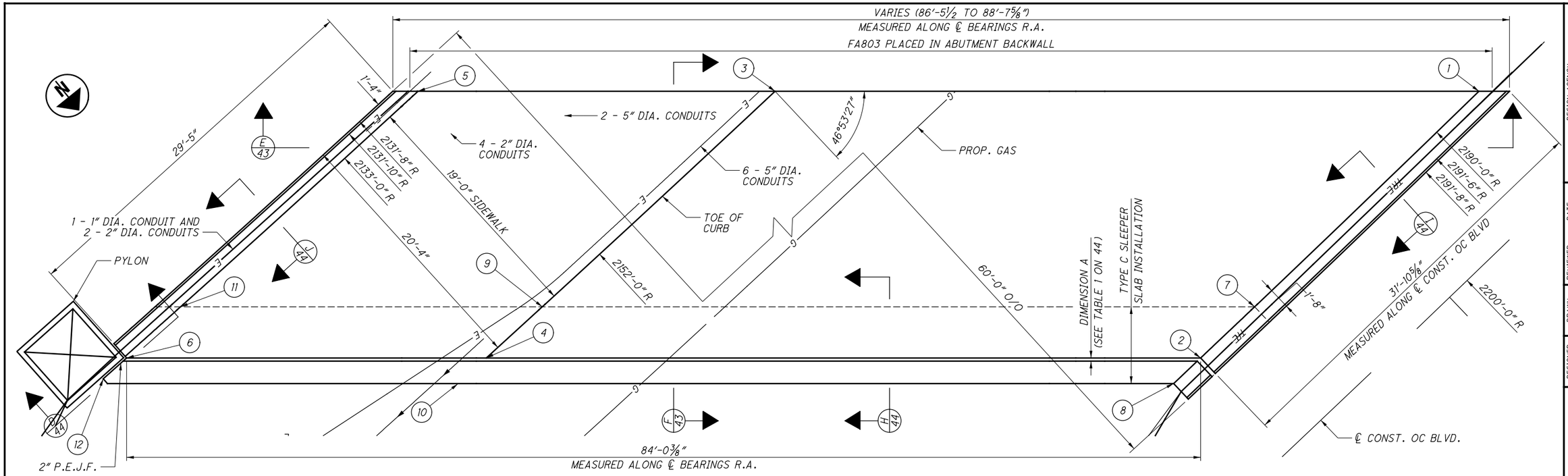

FORWARD APPROACH SLAB PLAN

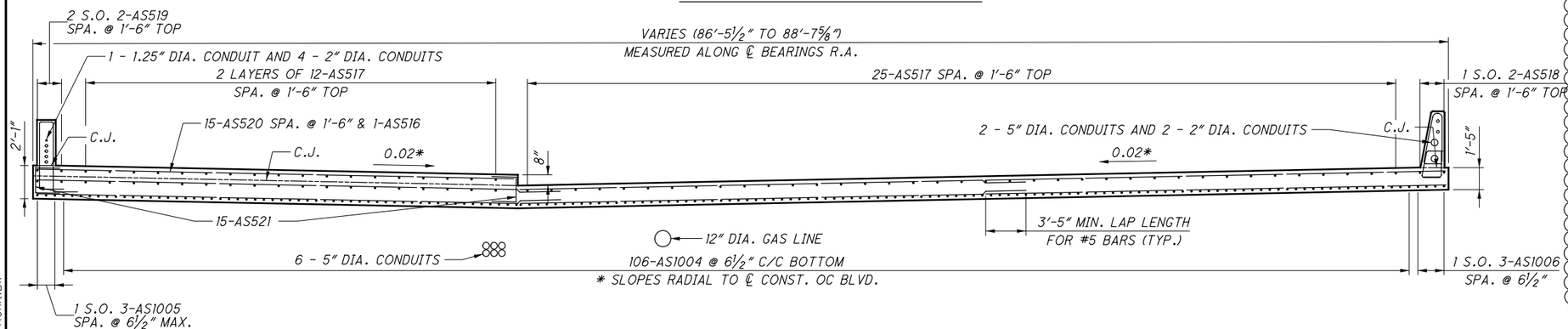

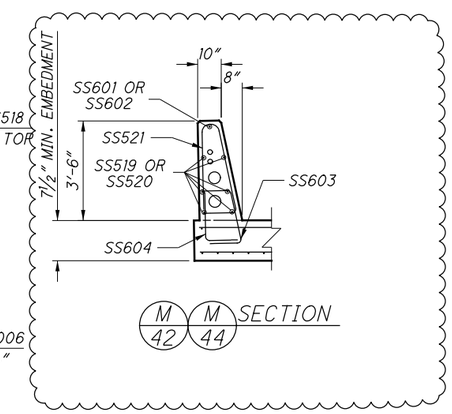

M/42 M/44 SECTION

E/43 SECTION

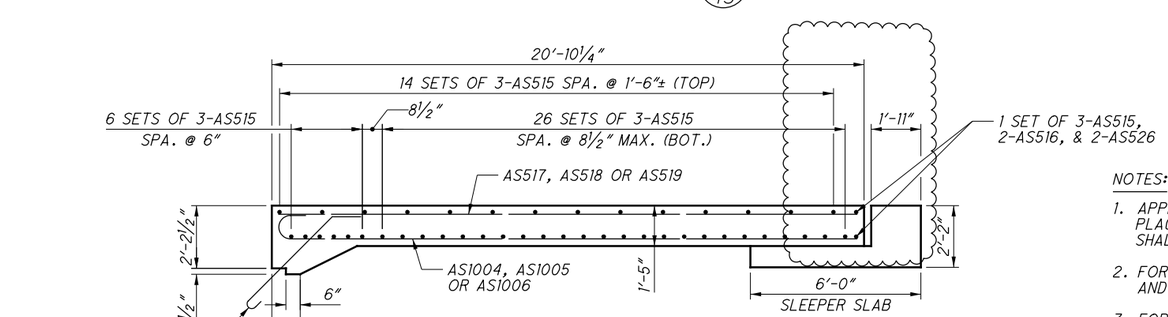

F/43 SECTION

APPROACH SLAB SURFACE STATIONS, OFFSETS, AND ELEVATIONS			
1	161+37.13	10' RT	685.29
2	161+67.42	10' RT	684.56
3	161+77.52	48' RT	683.56
4	162+08.95	48' RT	682.80
5	161+98.56	67' RT	684.10
6	162+30.42	67' RT	683.33

SLEEPER SLAB SURFACE STATIONS, OFFSETS, AND ELEVATIONS			
7	161+61.57	10' RT	684.70
8	161+70.34	10' RT	684.49
9	162+02.88	48' RT	682.95
10	162+11.99	48' RT	682.73
11	162+24.43	67' RT	683.47
12	162+32.95	66.84' RT	683.27

NOTES:

1. APPROACH SLAB AND SLEEPER SLAB LONGITUDINAL BARS SHALL BE PLACED PARALLEL TO THE CENTERLINE OF ROADWAY. TRANSVERSE BARS SHALL BE PLACED PARALLEL TO THE ABUTMENT.
2. FOR INFORMATION NOT SHOWN SEE STANDARD BRIDGE DRAWING AS-1-15 AND AS-2-15.
3. FOR PYLON DETAILS, SEE SHEET 45 OF 50.
4. FOR SLEEPER SLAB DETAILS, SEE SHEET 44 OF 50.
5. PROVIDE 2" CONCRETE COVER ON REINFORCEMENT BARS UNLESS NOTED OTHERWISE.

NO.	DATE	DESCRIPTION
2	2024-09-10	RECORD DRAWINGS
1	2021-05-18	DC056
0	2019-06-20	RFC

ISSUE RECORD

DESIGN AGENCY
Michael Baker INTERNATIONAL
1111 SUPERIOR AVE E., SUITE 2300, CLEVELAND, OH 44114

DESIGNED	DRAWN	REVIEWED	DATE
KAG	GMC	JWB	3/15/19
CHECKED	REVISED	STRUCTURE FILE NUMBER	
ETB		1801518	

RECORD PLANS

FORWARD APPROACH SLAB DETAILS
CUY-010-1978R
OH-10 EASTBOUND OVER GCRTA BLUE AND GREEN LINES

RECORD PLANS

CUY-IR490/SR010-2.09/19.28
PID No. 96833

RECORD PLANS

BU-19 - GCRTA BLUE/GREEN BRIDGES & CATENARY MODIFICATIONS
...\Sheets\010_1978R_SM402.dgn 11/21/2024 4:41:32 PM Rohit.Bk

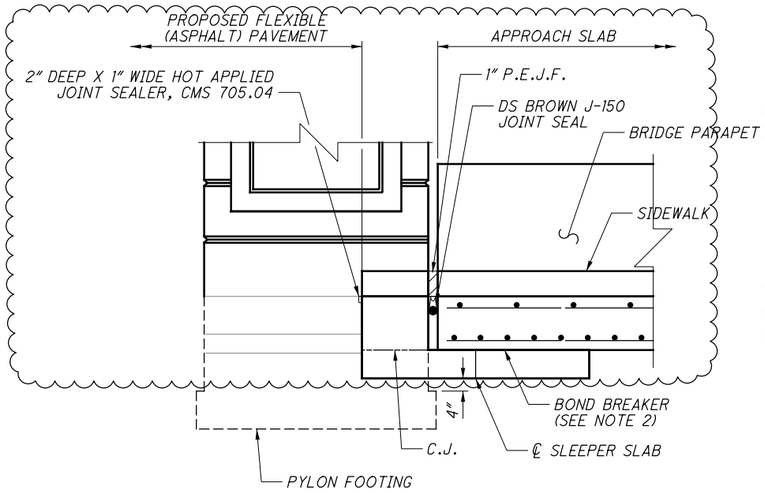

D/42 D/43 APPROACH SLAB SECTION
FORWARD SHOWN, REAR OPPOSITE HAND

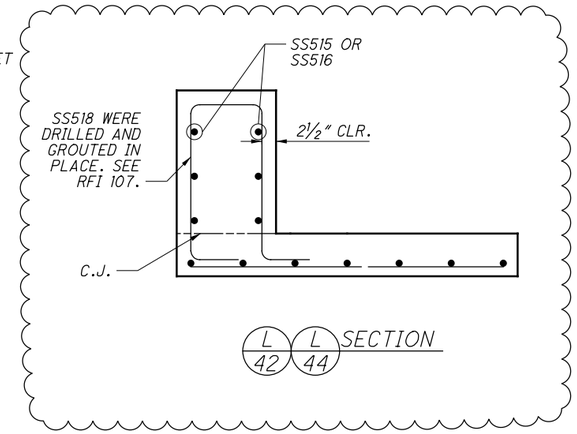

L/42 L/44 SECTION

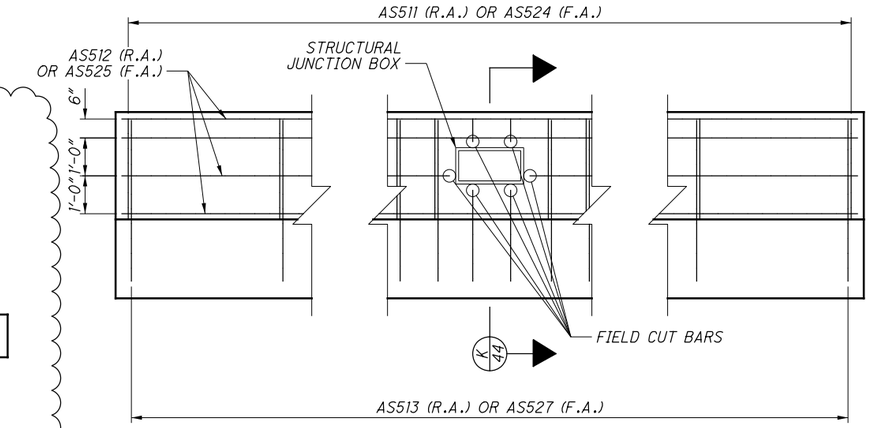

NORTH BARRIER ELEVATION

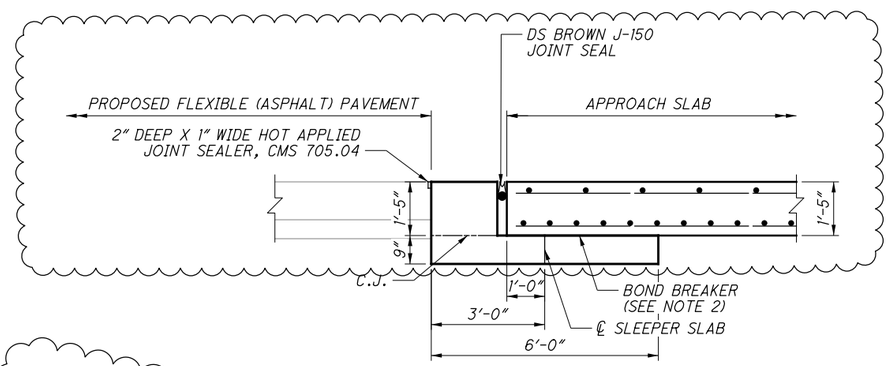

H/42 H/43 SECTION

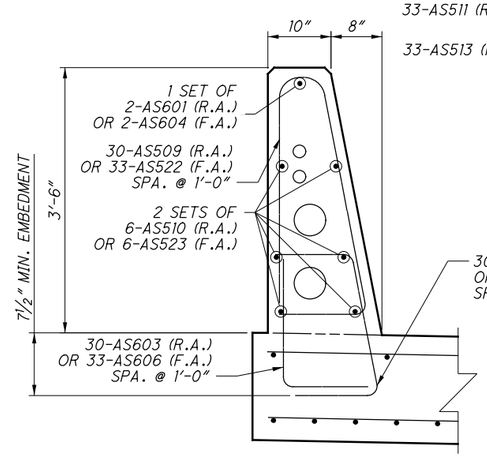

I/42 I/43 SECTION

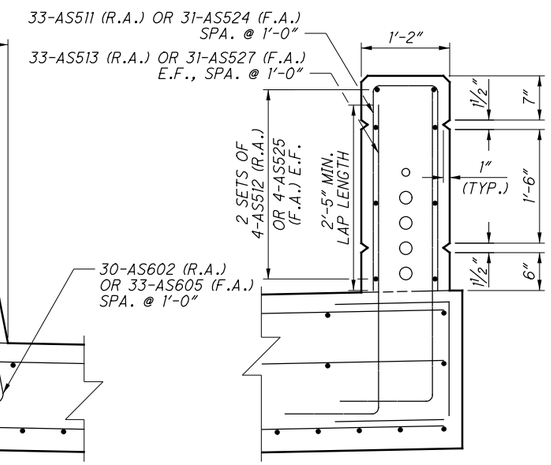

J/42 J/43 SECTION

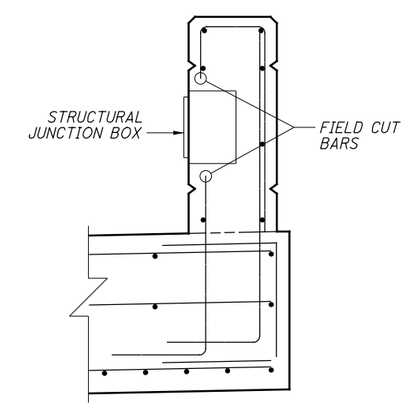

K/44 SECTION

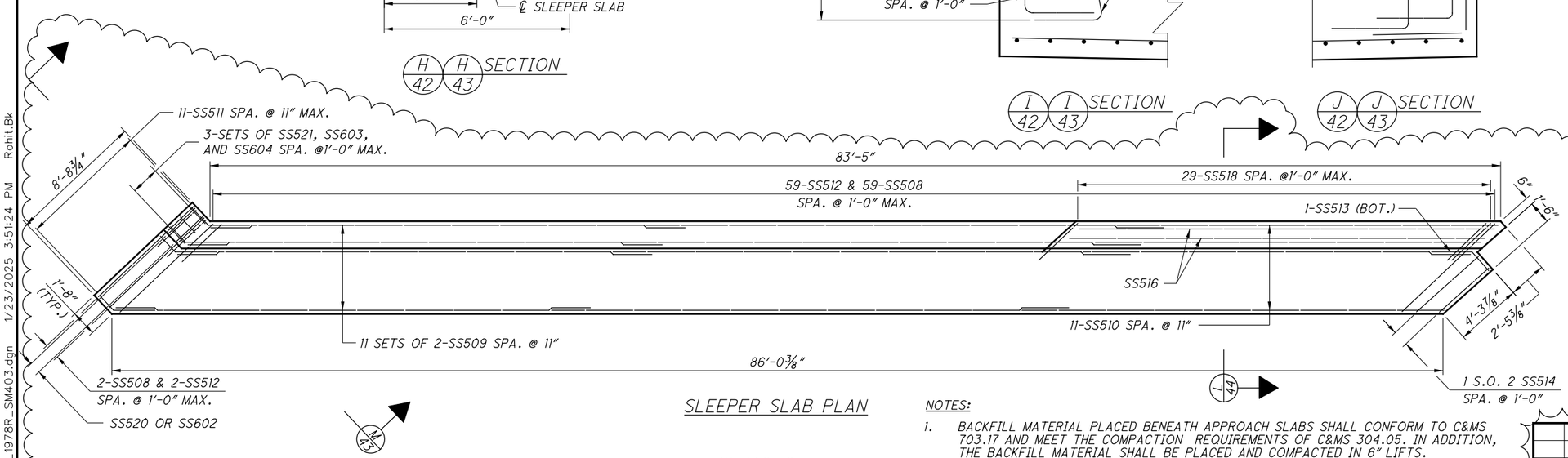

SLEEPER SLAB PLAN

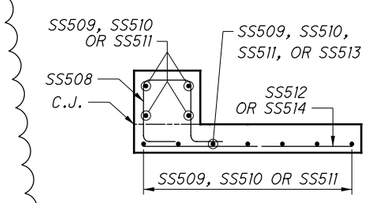

G/44 SECTION

LAP LENGTHS:

#5 BARS	3'-5" U.N.O.
#6 BARS	4'-4"

NOTES:

1. BACKFILL MATERIAL PLACED BENEATH APPROACH SLABS SHALL CONFORM TO C&MS 703.17 AND MEET THE COMPACTION REQUIREMENTS OF C&MS 304.05. IN ADDITION, THE BACKFILL MATERIAL SHALL BE PLACED AND COMPACTED IN 6" LIFTS.
2. SEE STANDARD BRIDGE DRAWING AS-1-15 AND AS-2-15 FOR ADDITIONAL INFORMATION.
3. PROVIDE 2" CONCRETE COVER ON REINFORCEMENT BARS UNLESS NOTED OTHERWISE.

NO.	DATE	DESCRIPTION
2	2024-09-10	RECORD DRAWINGS
1	2021-05-18	DC056
0	2019-06-20	RFC

ISSUE RECORD

DESIGN AGENCY
Michael Baker INTERNATIONAL
1111 SUPERIOR AVE E., SUITE 2300, CLEVELAND, OH 44114

DESIGNED	DRAWN	REVIEWED	DATE
KAG	GMC	JWB	3/15/19
CHECKED	REVISED	STRUCTURE FILE NUMBER	
LPC		1801518	

RECORD PLANS

APPROACH SLAB INSTALLATION SECTIONS
CUY-010-1978R
OH-10 EASTBOUND OVER GCRTA BLUE AND GREEN LINES

RECORD PLANS

CUY-IR490/SR010-2.09/19.28
PID No. 96833

RECORD PLANS

44/50

49/110

BU-19 - GCRTA BLUE/GREEN BRIDGES & CATENARY MODIFICATIONS
...\Sheets\010_1978R_SM403.dgn 1/23/2025 3:51:24 PM Rohit.Bk

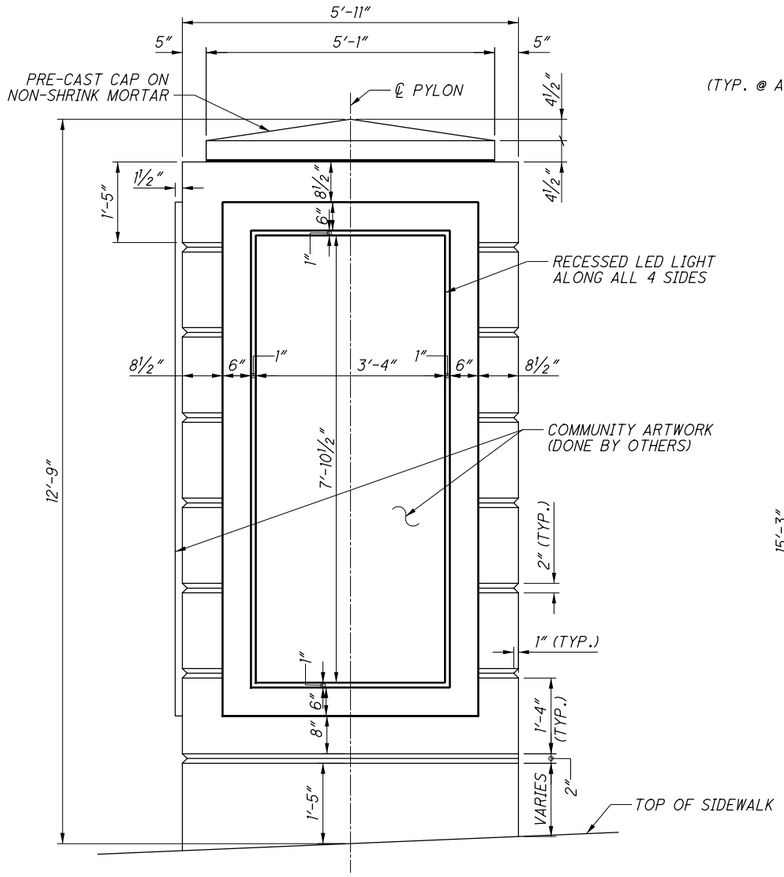

A/45 SECTION
(VIEW A SHOWN, VIEW C SIMILAR BUT OPPOSITE HAND)

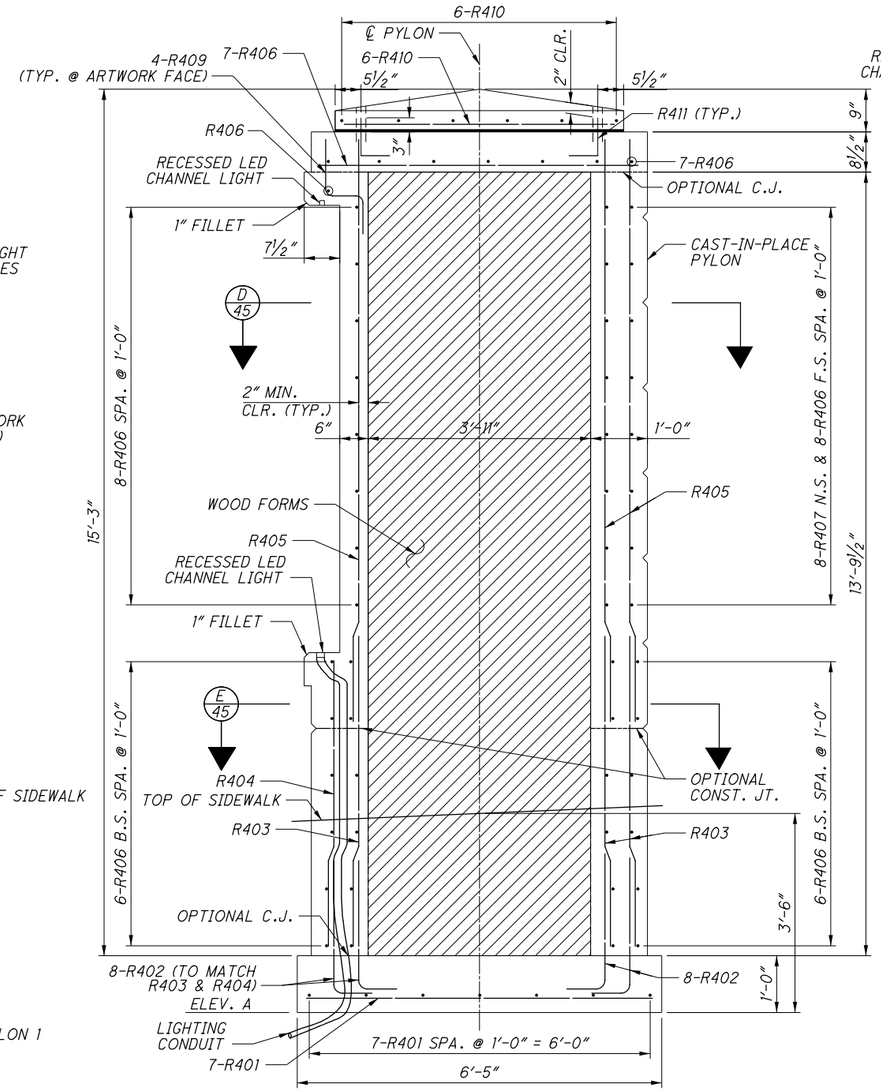

B/45 SECTION

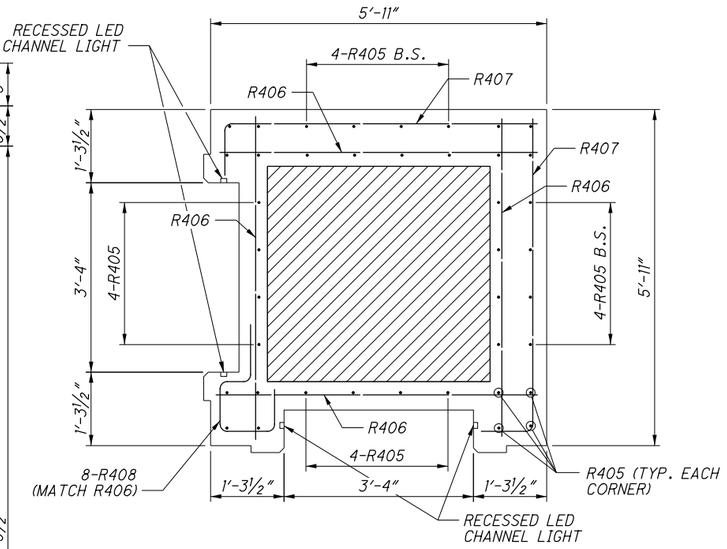

D/45 SECTION

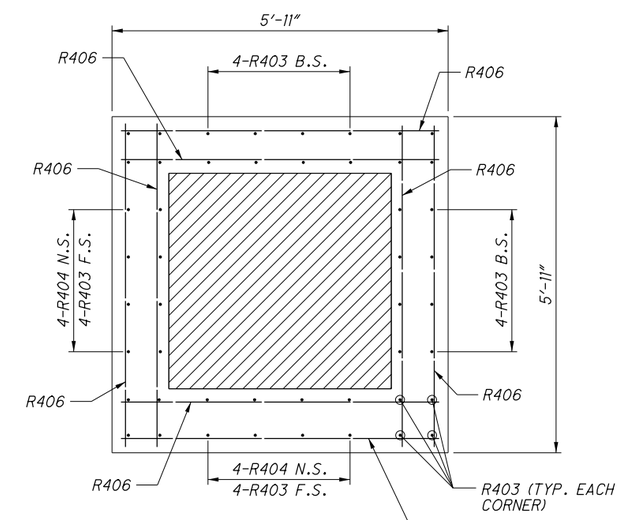

E/45 SECTION

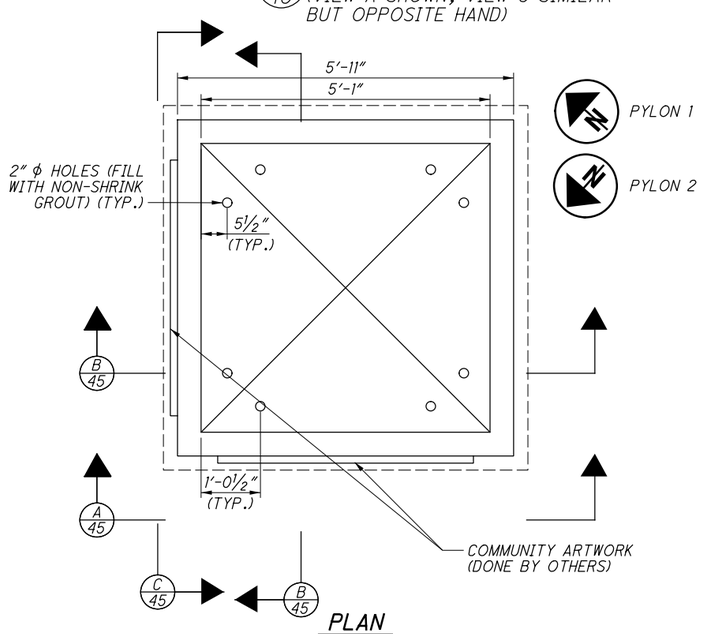

PLAN

ELEVATION TABLE	
PYLON NUMBER	ELEV. A
PYLON 1	680.96
PYLON 2	679.67

NOTES:

1. FOR LOCATION OF PYLONS, SEE SHEET 35/50.
2. SEAL ALL EXPOSED SURFACES OF PYLONS PER ITEM 512 SEALING OF CONCRETE SURFACES (EPOXY-URETHANE), AS PER PLAN.
3. ALL CONCRETE SHALL BE CLASS QC2 WITH QC/QA.
4. FOR REINFORCING DETAILS SEE SHEET 46/50.
5. PROVIDE 2" CONCRETE COVER ON REINFORCEMENT BARS UNLESS NOTED OTHERWISE.

NO.	DATE	DESCRIPTION
0	2019-06-20	RFC

ISSUE RECORD

DESIGN AGENCY
Michael Baker INTERNATIONAL
1111 SUPERIOR AVE E., SUITE 2300, CLEVELAND, OH 44114

DESIGNED	DRAWN	REVIEWED	DATE
GMC	GMC	JWB	3/15/19
CHECKED	REVISED	STRUCTURE FILE NUMBER	
CDC		1801518	

RECORD PLANS

PYLON DETAILS
CUY-010-1978R
OH-10 EASTBOUND OVER GCRTA BLUE AND GREEN LINES

RECORD PLANS

CUY-IR490/SR010-2.09/19.28
PID No. 96833

RECORD PLANS

BU-19 - GCRTA BLUE/GREEN BRIDGES & CATENARY MODIFICATIONS
...\Sheets\010_1978R_SA401.dgn 6/27/2019 4:59:39 PM Christopher.Lemley

REAR ABUTMENT											
MARK	NUMBER TOTAL	LENGTH	WEIGHT (LBS.)	TYPE	DIMENSIONS						SER INC.
					A	B	C	D	E	R	
RA501	70	11'-6"	840	2	2'-5"	6'-11"	2'-5"				
RA502	62	6'-6"	420	1	1'-0"	5'-7"					
	2	8'-6"				3'-11"					
RA503	SER. OF	TO	83	2	2'-5"	TO	2'-5"				1'-0"
	4	11'-6"				6'-11"					
RA504	1	12'-4"	13	2	2'-5"	7'-9"	2'-5"				
RA505	1	13'-1"	14	2	2'-5"	8'-6"	2'-5"				
RA506	70	9'-8"	706	2	2'-6"	4'-11"	2'-6"				
RA507	NOT	USED									
	2	8'-2"				3'-5"					
RA508	SER. OF	TO	55	2	2'-6"	TO	2'-6"				7"
	3	9'-4"				4'-7"					
RA509	1	10'-0"	10	2	2'-6"	5'-3"	2'-6"				
RA510	1	10'-10"	11	2	2'-6"	6'-1"	2'-6"				
RA511	40	30'-0"	1252	STR.							
RA512	20	19'-6"	407	STR.							
RA513	30	13'-3"	415	STR.							
RA514	NOT	USED									
RA515	30	8'-10"	276	STR.							
RA516	NOT	USED									
RA517	1	11'-10"	12	2	1'-0"	10'-1"	1'-0"				
RA518	1	12'-8"	13	2	1'-0"	10'-11"	1'-0"				
RA519	1	12'-10"	13	2	1'-0"	11'-1"	1'-0"				
RA520	3	15'-11"	50	1	15'-0"	1'-0"					
	1	22'-10"			21'-11"						
RA521	SER. OF	TO	74	1	TO	1'-0"					10"
	3	24'-6"			23'-7"						
RA522	4	22'-4"	93	STR.							
RA523	2	19'-2"	40	STR.							
RA524	4	5'-5"	23	2	1'-4"	3'-0"	1'-4"				
RA525	1	25'-5"	27	1	24'-6"	1'-0"					
RA526	1	23'-7"	25	STR.							
RA527	2	10'-8"	22	STR.							
RA528	8	3'-4"	28	STR.							
RA529	14	5'-11"	86	11	1'-4"	2'-2"	3'-6"				
RA530	14	5'-6"	80	19	3'-6"	1'-1"	1'-8"				

REAR ABUTMENT											
MARK	NUMBER TOTAL	LENGTH	WEIGHT (LBS.)	TYPE	DIMENSIONS						SER INC.
					A	B	C	D	E	R	
RA601	62	14'-4"	1335	2	5'-7"	6'-4"	2'-9"				
RA602	65	12'-7"	1229	2	5'-9"	1'-5"	5'-9"				
RA603	65	8'-11"	871	2	3'-11"	1'-5"	3'-11"				
RA604	65	11'-9"	1147	2	5'-7"	0'-11"	5'-7"				
RA605	8	12'-6"	150	2	4'-8"	6'-4"	1'-10"				
	2	8'-9"				3'-11"					
RA606	SER. OF	TO	123	2	2'-7"	TO	2'-7"				1'-0"
	4	11'-9"				6'-11"					
RA607	1	12'-7"	19	2	2'-7"	7'-9"	2'-7"				
RA608	1	13'-4"	20	2	2'-7"	8'-6"	2'-7"				
	2	12'-5"				3'-5"					
RA609	SER. OF	TO	117	2	4'-8"	TO	4'-8"				7"
	3	13'-7"				4'-7"					
RA610	1	14'-3"	21	2	4'-8"	5'-3"	4'-8"				
RA611	1	15'-1"	23	2	4'-8"	6'-1"	4'-8"				
RA612	9	12'-11"	175	2	5'-9"	1'-9"	5'-9"				
RA613	9	9'-3"	125	2	3'-11"	1'-9"	3'-11"				
RA614	9	12'-0"	162	2	5'-7"	1'-2"	5'-7"				
RA615	3	12'-6"	56	3	1'-9"	3'-8"					
RA616	NOT	USED									
RA617	19	25'-7"	730	2	12'-1"	1'-9"	12'-1"				
RA618	19	11'-9"	335	2	5'-2"	1'-9"	5'-2"				
RA619	2	5'-1"	15	1	1'-9"	3'-6"					
RA620	2	2'-10"	9	1	0'-7"	2'-5"					
RA621	1	4'-0"	6	1	1'-9"	2'-5"					
RA622	1	2'-8"	4	1	0'-7"	2'-3"					
RA623	4	4'-5	27	1	1'-7"	2'-11 1/2"					
RA624	6	15'-0"	135	3	3'-11"	3'-0"					
RA801	14	39'-11"	1492	STR.							
RA802	14	40'-11"	1529	STR.							
RA803	50	7'-3"	968	18	4'-11"	1'-0"	1'-0"				
RA901	10	4'-3"	145	1	1'-7"	2'-11 1/2"					
RA902	4	6'-1"	83	STR.							
		TOTAL:	16139	LBS.							

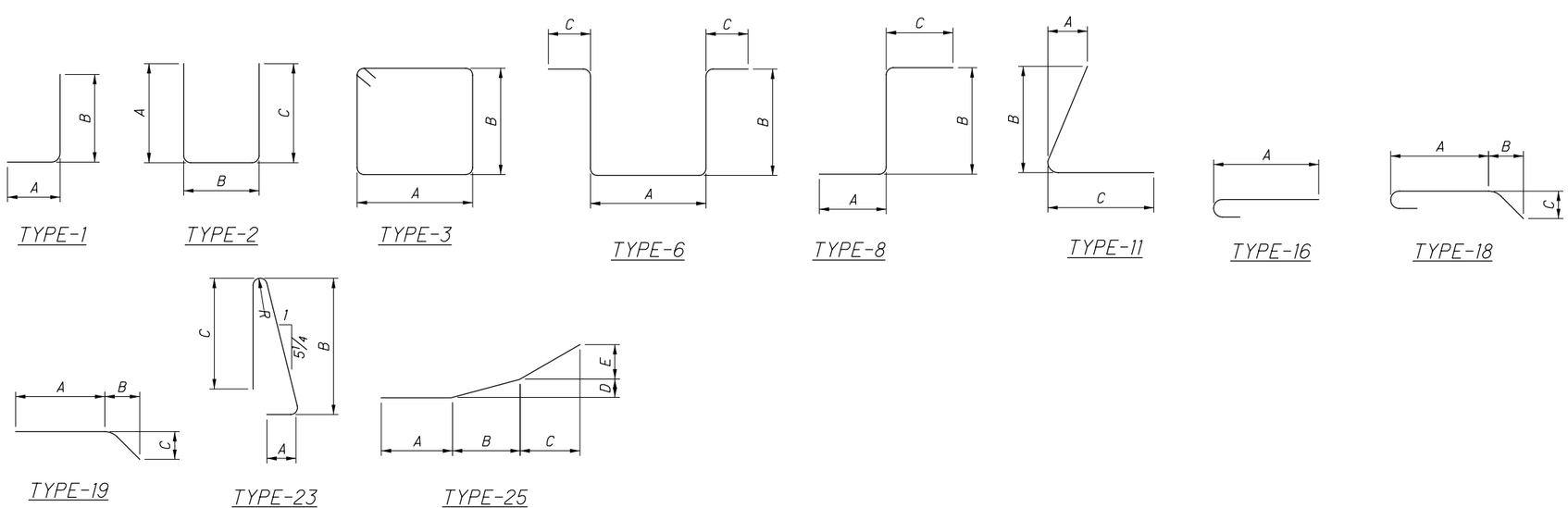

NOTES:

1. SERIES BARS - EACH BAR VARIES BY TABULATED AMOUNT.
2. ALL DIMENSIONS ARE OUT TO OUT.
3. TYPE "STR" INDICATES STRAIGHT BAR.
4. THE BAR SIZE NUMBER IS SPECIFIED IN THE "MARK" COLUMN. THE FIRST DIGIT INDICATES THE BAR SIZE NUMBER. FOR EXAMPLE, EA501 IS A #5 BAR SIZE.
5. ALL BARS SHALL BE EPOXY COATED UNLESS NOTED OTHERWISE.
6. SUBTOTALS AND TOTAL WEIGHTS ARE FOR INFORMATIONAL PURPOSES ONLY. IF THE REINFORCING LIST PROVIDED IN THE PLANS IS USED IT SHALL BE VERIFIED BY THE CONTRACTOR. ANY REVISIONS IN THE REINFORCING STEEL LIST AS SHOWN IN THE PLANS WILL NOT BE REASON FOR ADJUSTMENT IN THE BID PRICE FOR STRUCTURAL CONCRETE.
7. USE STANDAND HOOKS FOR ENDS OF BARS NOT SPECIFICALLY DIMENSIONED IN DETAILS.

NO.	DATE	DESCRIPTION
0	2019-06-20	RFC

ISSUE RECORD

DESIGN AGENCY
Michael Baker INTERNATIONAL
1111 SUPERIOR AVE E., SUITE 2300, CLEVELAND, OH 44114

DESIGNED	DRAWN	REVIEWED	DATE
SSW	SSW	JWB	3/15/19
CHECKED	REVISED	STRUCTURE FILE NUMBER	
ETB		1801518	

RECORD PLANS

REINFORCING SCHEDULE (1 OF 5)
CUY-010-1978R
OH-10 EASTBOUND OVER GCRTA BLUE AND GREEN LINES

RECORD PLANS

CUY-IR490/SR010-2.09/19.28
PID No. 96833

RECORD PLANS

BU-19 - GCRTA BLUE/GREEN BRIDGES & CATENARY MODIFICATIONS
...\Sheets\010_1978R_SL401.dgn 6/27/2019 4:59:46 PM Christopher.Lemley

FORWARD ABUTMENT											
MARK	NUMBER TOTAL	LENGTH	WEIGHT (LBS.)	TYPE	DIMENSIONS						SER INC.
					A	B	C	D	E	R	
FA401	13	2′-11″	25	19	2′-0″	0′-9″	0′-9″				
FA402	2	10′-1″	13	STR.							
FA403	2	6′-0″	8	STR.							
FA501	83	11′-6″	996	2	2′-5″	6′-11″	2′-5″				
FA502	72	6′-6″	488	1	1′-0″	5′-7″					
	2	8′-3″				3′-8″					
FA503	SER. OF	TO	142	2	2′-5″	TO	2′-5″				6″
	7	11′-3″				6′-8″					
FA504	2	14′-6″	30	2	2′-5″	9′-11″	2′-5″				
FA505	10	13′-8″	143	2	4′-6″	4′-11″	4′-6″				
FA506	15	12′-8″	198	2	4′-0″	4′-11″	4′-0″				
FA507	15	11′-10″	185	2	3′-7″	4′-11″	3′-7″				
FA508	16	10′-10″	181	2	3′-1″	4′-11″	3′-1″				
FA509	15	10′-0″	156	2	2′-8″	4′-11″	2′-8″				
FA510	12	9′-6″	119	2	2′-5″	4′-11″	2′-5″				
	2	7′-4″				2′-9″					
FA511	SER. OF	TO	67	2	2′-5″	TO	2′-5″				6″
	4	8′-10″				4′-4″					
FA512	2	11′-8″	24	2	2′-5″	7′-1″	2′-5″				
FA513	NOT	USED									
FA514	36	30′-0″	1126	STR.							
FA515	19	36′-3″	718	STR.							
FA516	13	17′-11″	243	19	14′-6″	2′-5″	2′-6″				
FA517	15	15′-11″	249	19	12′-6″	2′-5″	2′-6″				
FA518	2	17′-2″	36	19	13′-9″	2′-5″	2′-6″				
FA519	28	14′-7″	426	STR.							
FA520	NOT	USED									
	1	15′-4″			13′-7″						
FA521	SER. OF	TO	52	1	TO	1′-0″					1′-2″
	3	17′-8″			15′-11″						
FA522	12	18′-5″	231	1	17′-6″	1′-0″					
FA523	4	17′-6″	73	STR.							
FA524	2	12′-5″	26	STR.							
FA525	2	27′-8″	58	STR.							
FA526	2	32′-0″	67	STR.							
FA527	1	31′-0″	32	1	30′-1″	1′-0″					
FA528	8	3′-8″	31	STR.							
FA529	4	5′-11″	25	2	1′-4″	3′-6″	1′-4″				
FA530	12	5′-10″	73	19	3′-6″	1′-9″	1′-7″				

FORWARD ABUTMENT											
MARK	NUMBER TOTAL	LENGTH	WEIGHT (LBS.)	TYPE	DIMENSIONS						SER INC.
					A	B	C	D	E	R	
FA601	73	14′-4″	1572	2	5′-7″	6′-4″	2′-9″				
FA602	77	13′-1″	1513	2	6′-0″	1′-5″	6′-0″				
FA603	77	7′-5″	858	2	3′-2″	1′-5″	3′-2″				
FA604	77	10′-3″	1185	2	4′-10″	0′-11″	4′-10″				
FA605	11	12′-6″	207	2	4′-8″	6′-4″	1′-10″				
	2	8′-6″				3′-8″					
FA606	SER. OF	TO	210	2	2′-7″	TO	2′-7″				6″
	7	11′-6″				6′-8″					
FA607	2	14′-9″	44	2	2′-7″	9′-11″	2′-7″				
FA608	NOT	USED									
	1	15′-11″				2′-9″					
FA609	SER. OF	TO	100	2	6′-9″	TO	6′-9″				6″
	4	17′-5″				4′-3″					
FA610	1	20′-3″	30	2	6′-9″	7′-1″	6′-9″				
	1	11′-9″				2′-9″					
FA611	SER. OF	TO	75	2	4′-8″	TO	4′-8″				6″
	4	13′-3″				4′-3″					
FA612	1	16′-1″	24	2	4′-8″	7′-1″	4′-8″				
FA613	9	13′-8″	185	2	6′-0″	2′-0″	6′-0″				
FA614	9	8′-0″	108	2	3′-2″	2′-0″	3′-2″				
FA615	9	10′-8″	144	2	4′-10″	1′-4″	4′-10″				
FA616	5	13′-4″	100	3	2′-0″	3′-10″					
FA617	NOT	USED									
FA618	10	20′-9″	312	2	9′-10″	1′-5″	9′-10″				
FA619	10	14′-11″	224	2	6′-11″	1′-5″	6′-11″				
FA620	2	21′-4″	64	2	9′-10″	2′-0″	9′-10″				
FA621	2	15′-6″	47	2	6′-11″	2′-0″	6′-11″				
FA622	2	4′-4″	13	1	2′-0″	2′-6″					
FA623	2	2′-10″	9	1	0′-9″	2′-3″					
FA624	3	5′-3″	24	1	2′-0″	3′-5″					
FA625	3	3′-4″	15	1	0′-9″	2′-9″					
FA626	4	4′-3″	26	1	1′-7″	2′-10″					
~~FA627~~	~~6~~	~~15′-1″~~	~~143~~	~~3~~	~~4′-8″~~	~~2′-10″~~					
FA628	27			2	5′-2″	0′-6″	5′-2″				
~~FA701~~	~~22~~	~~26′-2″~~	~~1177~~	~~2~~	~~12′-11″~~	~~0′-8″~~	~~12′-11″~~				
FA702	22	12′-4″	555	2	6′-0″	0′-8″	6′-0″				
FA801	21	33′-5″	1874	STR.							
FA802	21	34′-9″	1948	STR.							
FA803	60	8′-0″	1282	18	5′-8″	1′-0″	1′-0″				
FA901	10	4′-1 1/2″	140	1	1′-7″	2′-10″					
FA902	4	7′-0″	95	STR.							
		TOTAL:	20544	LBS.							

NOTES:

1. SEE SHEET 51 FOR REINFORCING NOTES AND BAR BENDING DETAILS.

NO.	DATE	DESCRIPTION
1	2024-09-10	RECORD DRAWINGS
0	2019-06-20	RFC

ISSUE RECORD

DESIGN AGENCY
Michael Baker INTERNATIONAL
1111 SUPERIOR AVE E., SUITE 2300, CLEVELAND, OH 44114

DESIGNED	DRAWN	REVIEWED	DATE
SSW	SSW	JWB	3/15/19
CHECKED	REVISED	STRUCTURE FILE NUMBER	
ETB		1801518	

RECORD PLANS

REINFORCING SCHEDULE (2 OF 5)
CUY-010-1978R
OH-10 EASTBOUND OVER GCRTA BLUE AND GREEN LINES

RECORD PLANS

CUY-IR490/SR010-2.09/19.28
PID No. 96833

RECORD PLANS

BU-19 - GCRTA BLUE/GREEN BRIDGES & CATENARY MODIFICATIONS
...\Sheets\010_1978R_SL401.dgn 1/27/2025 3:46:53 PM Gregory.Hertler

PIER 1											
MARK	NUMBER TOTAL	LENGTH	WEIGHT (LBS.)	TYPE	DIMENSIONS						SER INC.
					A	B	C	D	E	R	
1P501	24	30'-0"	751	STR							
1P502	16	13'-10"	231	1	2'-0"	12'-0"					
1P503	6	22'-3"	139	1	1'-0"	21'-4					
1P504	6	13'-1"	82	2	1'-0"	11'-4"	1'-0"				
1P505	35	13'-6"	493	38	2'-6"					1'-9"	
1P506	39	14'-8"	597	3	4'-2"	2'-11"					
1P507	128	5'-4"	712	34	4'-2"						
1P601	140	12'-0"	2523	2	4'-1 1/8"	4'-2"	4'-1 1/8"				
1P602	64	12'-3"	1178	2	4'-2 3/4"	4'-2"	4'-2 3/4"				
1P603	60	10'-4"	931	2	4'-1 1/8"	2'-6"	4'-1 1/8"				
1P604	22	10'-7"	350	2	4'-2 3/4"	2'-6"	4'-2 3/4"				
1P701	200	5'-4"	2180	34	4'-4"						
1P901	224	30'-0"	22848	STR							
1P902	56	16'-8"	3173	STR							
1P903	430	14'-7"	21321	STR							
1P904	166	20'-8"	11664	2	8'-6 7/8"	4'-1 1/2"	8'-6 7/8"				
1P905	60	25'-8"	5236	24	4'-4"	9'-7"				2'-2"	
1P1003	65	28'-4"	7925	STR							
1P1101	63	40'-0"	13389	STR							
1P1102	42	20'-0"	4463	1	2'-0"	18'-4"					
1P1103	64	30'-0"	10201	STR							
1P1104	16	37'-0"	3145	STR							
1SP501	5	639'-2"	3333	27	0'-3 3/8"	3'-6"	15'-8 7/8"				
		TOTAL:	116865	LBS.							

PIER 2											
MARK	NUMBER TOTAL	LENGTH	WEIGHT (LBS.)	TYPE	DIMENSIONS						SER INC.
					A	B	C	D	E	R	
2P501	18	30'-0"	563	STR							
2P502	16	22'-0"	367	1	2'-0 1/4"	20'-1 1/4"					
2P503	24	19'-3"	482	1	1'-10"	17'-6 7/8"					
2P504	2	21'-10"	46	1	2'-0 1/4"	19'-11 1/4"					
2P505	6	15'-6"	97	2	1'-10"	12'-1 1/8"	1'-10"				
2P506	35	13'-6"	493	38	2'-6"					1'-9"	
2P601	192	16'-3"	4686	1	1'-0"	15'-5 1/8"					
2P602	89	10'-11"	1459	2	3'-7"	4'-0 1/2"	3'-7"				
2P603	26	25'-4"	989	24	4'-2"	9'-6"				2'-1"	
2P604	90	30'-0"	4055	STR							
2P605	100	13'-4"	2003	2	4'-9 1/8"	4'-2"	4'-9 1/8"				
2P606	12	11'-6"	207	2	4'-9 1/8"	2'-4"	4'-9 1/8"				
2P607	84	12'-4"	1556	2	4'-3 1/8"	4'-2"	4'-3 1/8"				
2P608	8	10'-6"	126	2	4'-3 1/8"	2'-4"	4'-3 1/8"				
2P609	28	11'-10"	498	2	4'-0"	4'-2"	4'-0"				
2P701	187	15'-6"	5925	2	1'-2"	13'-6"	1'-2"				
2P801	102	30'-0"	8170	STR							
2P802	68	16'-5"	2981	1	1'-4"	15'-4"					
2P1001	70	15'-3"	4593	1	1'-10"	13'-9 1/8"					
2P1002	70	27'-0"	8130	STR							
2P1003	18	30'-0"	2324	STR							
2P1004	36	34'-0"	5267	STR							
2P1005	36	20'-6"	3176	1	1'-10"	19'-0"					
2SP501	5	966'-0"	5038	27	0'-3 3/8"	3'-6"	24'-2 5/8"				
		TOTAL:	63231	LBS.							

PYLON											
MARK	NUMBER TOTAL	LENGTH	WEIGHT (LBS.)	TYPE	DIMENSIONS						SER INC.
					A	B	C	D	E	R	
R401	28	5'-11"	111	STR							
R402	96	3'-0"	192	1	0'-8"	2'-5"					
R403	80	5'-8"	303	STR							
R404	16	5'-2"	55	STR							
R405	80	10'-4"	552	STR							
R406	192	5'-7"	716	STR							
R407	32	6'-6"	139	1	0'-11 1/2"	5'-7"					
R408	16	4'-9"	51	37	0'-9 1/2"	0'-10 1/2"	0'-10 1/2"	0'-6"	2'-0"		
R409	16	3'-5"	37	8	0'-10 1/2"	0'-8"	2'-0"				
R410	24	4'-9"	76	STR							
R411	16	1'-5"	15	1	0'-10"	0'-8"					
		TOTAL:	2247	LBS.							

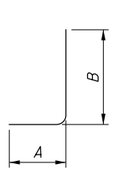

TYPE-1

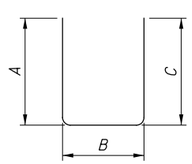

TYPE-2

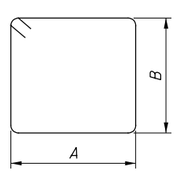

TYPE-3

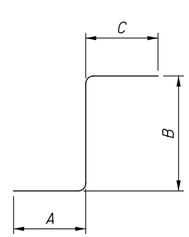

TYPE-8

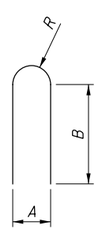

TYPE-24

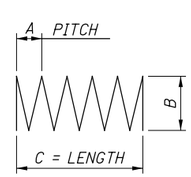

TYPE-27

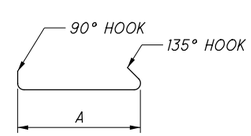

TYPE-34

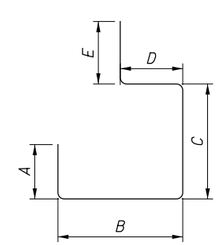

TYPE-37

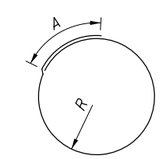

TYPE-38

NOTES:

1. SEE SHEET 51 FOR REINFORCING NOTES.

NO.	DATE	DESCRIPTION
0	2019-06-20	RFC

ISSUE RECORD

DESIGN AGENCY
Michael Baker INTERNATIONAL
1111 SUPERIOR AVE E., SUITE 2300, CLEVELAND, OH 44114

DESIGNED	DRAWN	REVIEWED	DATE
ABP	JCC	JWB	3/15/19
CHECKED	REVISED	STRUCTURE FILE NUMBER	
KAG		1801518	

RECORD PLANS

REINFORCING SCHEDULE (3 OF 5)
CUY-010-1978R
OH-10 EASTBOUND OVER GCRTA BLUE AND GREEN LINES

RECORD PLANS

CUY-IR490/SR010-2.09/19.28
PID No. 96833

RECORD PLANS

BU-19 - GCRTA BLUE/GREEN BRIDGES & CATENARY MODIFICATIONS
...\Sheets\010_1978R_SL401.dgn 6/27/2019 4:59:47 PM Christopher.Lemley

SUPERSTRUCTURE											
MARK	NUMBER TOTAL	LENGTH	WEIGHT (LBS.)	TYPE	DIMENSIONS						SER INC.
					A	B	C	D	E	R	
S401	988	30'-0"	19800	STR							
	1	7'-0"									
S402	SER. OF	TO	501	STR							2 1/16"
	61	17'-7"									
	1	13'-10"									
S403	SER. OF	TO	157	STR							3"
	15	17'-7"									
S404	396	29'-6"	7804	STR							
S405	198	37'-0"	4894	STR							
S501	1031	30'-0"	32260	STR							
S502	710	36'-8"	27153	STR							
	1	7'-9"									
S503	SER. OF	TO	88	STR							1 11/16"
	10	9'-2"									
	1	7'-9"									
S504	SER. OF	TO	950	STR							8 7/16"
	41	36'-8"									
	1	3'-11"									
S505	SER. OF	TO	491	STR							8 1/16"
	32	25'-6"									
S506	634	26'-2"	17303	STR							
S507	1	19'-5"	20	STR							
S508	1367	32'-0"	45625	16	31'-5"						
	1	8'-4"			7'-9"						
S509	SER. OF	TO	94	16							1 11/16"
	10	9'-9"			9'-2"						
	1	8'-11"			7'-9"						
S510	SER. OF	TO	736	17							8 3/8"
	34	32'-7"			31'-5"						
	1	4'-6"			3'-11"						
S511	SER. OF	TO	729	16							8 1/4"
	39	31'-4"			30'-9"						
S512	1	16'-7"	17	STR							
	1	23'-3"									
S513	SER. OF	TO	2352	STR							1 5/8"
	79	33'-10"									
	1	3'-8"									
S514	SER. OF	TO	704	STR							5 3/4"
	46	25'-8"									
	1	7'-9"									
S515	SER. OF	TO	1413	STR							5 11/16"
	61	36'-8"									
	1	7'-9"									
S516	SER. OF	TO	157	STR							2 1/2"
	16	11'-1"									
S517	1	33'-2"	35	STR							
	1	4'-3"			3'-8"						
S518	SER. OF	TO	1044	16							5 13/16"
	56	31'-6"			30'-11"						
	1	8'-11"			7'-9"						
S519	SER. OF	TO	1104	17							5 9/16"
	51	32'-7"			31'-5"						
	1	8'-4"			7'-9"						
S520	SER. OF	TO	167	16							2 1/2"
	16	11'-8"			11'-1"						
S521	1	30'-4"	32	STR							

SUPERSTRUCTURE											
MARK	NUMBER TOTAL	LENGTH	WEIGHT (LBS.)	TYPE	DIMENSIONS						SER INC.
					A	B	C	D	E	R	
S522	740	7'-8"	5917	16	7'-1"						
S523	381	19'-10"	7881	STR							
	1	2'-8"									
S524	SER. OF	TO	145	STR							1'-2 3/4"
	13	18'-8"									
	1	1'-9"									
S525	SER. OF	TO	232								10 1/8"
	21	19'-5"									
S526	402	2'-9"	1153	2	0'-10"	1'-4"	0'-10"				
S527	394	2'-5"	993	2	0'-10"	1'-0"	0'-10"				
S528	108	30'-0"	3379	STR							
S529	4	24'-0"	100	STR							
S530	1	11'-0"	11	STR							
S531	22	4'-8"	107	STR							
S532	32	14'-8"	490	STR							
S533	14	7'-1"	103	STR							
S534	2	12'-2"	25	STR							
S535	420	7'-4"	3212	23	0'-11"	3'-3"	3'-0"			0'-2 3/4"	
S536	4	7'-6"	31	STR							
S537	8	9'-8"	81	STR							
S538	68	12'-8"	899	STR							
S539	60	5'-2"	323	STR							
S540	24	4'-8"	117	STR							
S541	4	7'-2"	30	STR							
S542	2	9'-3"	19	STR							
S543	2	11'-2"	23	STR							
S544	442	5'-9"	2651	2	2'-8"	0'-8"	2'-8"				
S545	18	4'-10"	91	2	0'-10"	3'-5"	0'-10"				
S546	18	8'-2"	153	2	2'-6"	3'-5"	2'-6"				
S547	18	10'-9"	202	21	2'-10"	2'-6"	0'-6"	2'-6"			
S548	24	4'-3"	106	STR							
S549	1	13'-2"	14	STR							
S550	2	9'-10"	21	STR							
S551	2	12'-2"	25	STR							
S552	884	5'-8"	5225	1	1'-6"	4'-4"					
S553	NOT	USED									
S554	14	1'-2"	17	STR							
S555	14	1'-6"	22	STR							
S601	1	12'-8"	19	STR							
S602	11	4'-8"	77	STR							
S603	16	14'-8"	352	STR							
S604	7	7'-1"	74	STR							
S605	1	11'-5"	17	STR							
S606	420	2'-5"	1525	1	1'-0"	1'-7"					
S607	420	3'-1"	1945	28	1'-7"	0'-11"					
S608	1	1'-2"	2	STR							
S609	1	1'-6"	2	STR							
		TOTAL:	203441	LBS.							

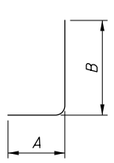

TYPE-1

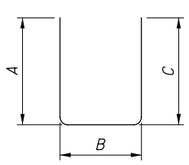

TYPE-2

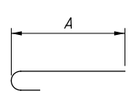

TYPE-16

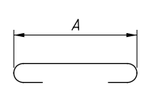

TYPE-17

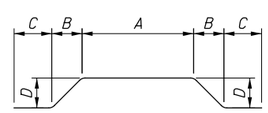

TYPE-21

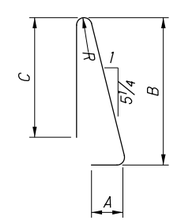

TYPE-23

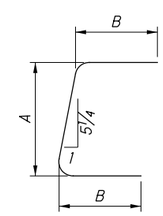

TYPE-28

NOTES:

1. SERIES BARS - EACH BAR VARIES BY TABULATED AMOUNT.
2. ALL DIMENSIONS ARE OUT TO OUT.
3. TYPE "STR" INDICATES STRAIGHT BAR.
4. THE BAR SIZE NUMBER IS SPECIFIED IN THE "MARK" COLUMN. THE FIRST DIGIT INDICATES THE BAR SIZE NUMBER. FOR EXAMPLE, EA501 IS A #5 BAR SIZE.
5. ALL BARS SHALL BE EPOXY COATED UNLESS NOTED OTHERWISE.
6. SUBTOTALS AND TOTAL WEIGHTS ARE FOR INFORMATIONAL PURPOSES ONLY. IF THE REINFORCING LIST PROVIDED IN THE PLANS IS USED IT SHALL BE VERIFIED BY THE CONTRACTOR. ANY REVISIONS IN THE REINFORCING STEEL LIST AS SHOWN IN THE PLANS WILL NOT BE REASON FOR ADJUSTMENT IN THE BID PRICE FOR STRUCTURAL CONCRETE.
7. USE STANDAND HOOKS FOR ENDS OF BARS NOT SPECIFICALLY DIMENSIONED IN DETAILS.

NO.	DATE	DESCRIPTION
1	2020-06-10	DC041
0	2019-03-13	RFC

ISSUE RECORD

DESIGN AGENCY
Michael Baker INTERNATIONAL
1111 SUPERIOR AVE E., SUITE 2300, CLEVELAND, OH 44114

DESIGNED	DRAWN	REVIEWED	DATE
ABP	JCC	JWB	3/15/19
CHECKED	REVISED	STRUCTURE FILE NUMBER	
EKW		1801518	

RECORD PLANS

REINFORCING SCHEDULE (4 OF 5)
CUY-010-1978R
OH-10 EASTBOUND OVER GCRTA BLUE AND GREEN LINES

RECORD PLANS

CUY-IR490/SR010-2.09/19.28
PID No. 96833

BU-19 - GCRTA BLUE/GREEN BRIDGES & CATENARY MODIFICATIONS
...\Sheets\010_1978R_SL401.dgn 6/24/2020 8:12:08 AM David.Fell

REAR APPROACH SLAB BARS (FOR INFORMATION ONLY)

MARK	NUMBER TOTAL	LENGTH	WEIGHT (LBS.)	TYPE	DIMENSIONS A	B	C	D	E	R	SER INC.
SS501	22	30'-0"	688	STR							
SS502	11	15'-8"	180	STR							
SS503	5	4'-6"	23	19	3'-5"	0'-11"	0'-7"				
SS504	11	4'-10"	55	19	3'-5"	1'-2 1/2"	0'-9 1/2"				
SS505	2	4'-8"	10	STR							
SS506	60	6'-11"	433	STR							
SS507	60	6'-4"	396	30	0'-10"	1'-7 3/4"	1'-9"	1'-9"			
AS501	168	26'-8"	4673	STR							
AS502	41	30'-1"	1286	STR							
	2	30'-1"									
AS503	SER. OF	TO	128	STR							1'-0"
	2	31'-1"									
	1	28'-8"									
AS504	SER. OF	TO	61	STR							1'-1"
	2	29'-9"									
AS505	3	4'-9"	15	19	3'-5"	1'-1 1/2"	0'-9 1/2"				
AS506	36	3'-1"	116	2	0'-10"	1'-8"	0'-10"				
AS507	18	24'-5"	458	STR							
AS508	2	4'-10"	10	19	3'-5"	1'-2 1/2"	0'-9 1/2"				
AS509	30	7'-4"	229	23	0'-11"	3'-3"	3'-0"			0'-2 3/4"	
AS510	12	16'-9"	210	STR							
AS511	33	5'-7"	192	2	2'-7"	0'-8"	2'-7"				
AS512	16	17'-6"	292	STR							
AS513	66	5'-6"	379	1	1'-6"	4'-1"					
AS601	2	17'-3"	52	STR							
AS602	30	3'-1"	139	28	1'-7"	0'-11"					
AS603	30	2'-5"	109	1	1'-0"	1'-7"					
AS1001	106	31'-5"	14330	16	30'-0"						
	1	31'-8"			30'-3"						
AS1002	SER. OF	TO	414	16	TO						4 1/2"
	3	32'-5"			31'-0"						
	1	30'-1"			28'-8"						
AS1003	SER. OF	TO	393	16	TO						4 1/2"
	3	30'-10"			29'-5"						
SS515	2	22'-6"	47	STR							
SS517	24	7'-8"	192	30	0'-10"	1'-7 3/4"	2'-5"	2'-5"			
SS519	6	1'-8"	10	STR							
SS521	3	7'-4"	23	23	0'-11"	3'-3"	3'-0"			0'-2 3/4"	
SS601	1	1'-8"	3	STR							
SS603	3	3'-1"	14	28	1'-7"	0'-11"					
SS604	3	2'-5"	11	1	1'-0"	1'-7"					
		TOTAL:	25571	LBS.							

FORWARD APPROACH SLAB BARS (FOR INFORMATION ONLY)

MARK	NUMBER TOTAL	LENGTH	WEIGHT (LBS.)	TYPE	DIMENSIONS A	B	C	D	E	R	SER INC.
SS508	61	6'-8"	424	30	0'-10"	1'-11 1/2"	1'-9"	1'-9"			
SS509	22	30'-0"	688	STR							
SS510	11	32'-11"	378	STR							
SS511	11	4'-10"	55	19	3'-5"	1'-0"	1'-0 1/2"				
SS512	61	8'-5"	535	STR							
SS513	1	4'-9"	5	19	3'-5"	0'-10 1/2"	1'-0"				
	1	4'-1"									
SS514	SER. OF	TO	10	STR							1'-2"
	2	5'-3"									
AS515	144	31'-4"	4706	STR							
AS516	3	4'-8"	15	19	3'-5"	0'-10"	0'-11 1/4"				
AS517	41	30'-5"	1301	STR							
	1	29'-10"									
AS518	SER. OF	TO	64	STR							1'-7"
	2	31'-5"									
	2	29'-3"									
AS519	SER. OF	TO	125	STR							1'-6"
	2	30'-9"									
AS520	15	29'-5"	460	STR							
AS521	30	3'-1"	96	2	0'-10"	1'-8"	0'-10"				
AS522	33	7'-4"	252	23	0'-11"	3'-3"	3'-0"			0'-2 3/4"	
AS523	12	17'-8"	221	STR							
AS524	31	5'-7"	181	2	2'-7"	0'-8"	2'-7"				
AS525	16	17'-2"	286	STR							
AS526	2	5'-0"	10	19	3'-5"	1'-1"	1'-1 3/4"				
AS527	62	5'-6"	356	1	1'-6"	4'-1"					
AS604	2	18'-2"	55	STR							
AS605	33	3'-1"	153	28	1'-7"	0'-11"					
AS606	33	2'-5"	120	1	1'-0"	1'-7"					
AS1004	106	31'-10"	14520	16	30'-5"						
	1	30'-8"			29'-3"						
AS1005	SER. OF	TO	403	16	TO						7"
	3	31'-10"			30'-5"						
	1	31'-8"			30'-3"						
AS1006	SER. OF	TO	416	16	TO						7"
	3	32'-10"			31'-5"						
SS516	2	27'-9"	58	STR							
SS518	29	8'-0"	242	30	0'-10"	1'-11 1/2"	2'-5"	2'-5"			
SS520	6	2'-2"	14	STR							
SS521	3	7'-4"	23	23	0'-11"	3'-3"	3'-0"			0'-2 3/4"	
SS602	1	2'-2"	3	STR							
SS603	3	3'-1"	14	28	1'-7"	0'-11"					
SS604	3	2'-5"	11	1	1'-0"	1'-7"					
		TOTAL:	26200	LBS.							

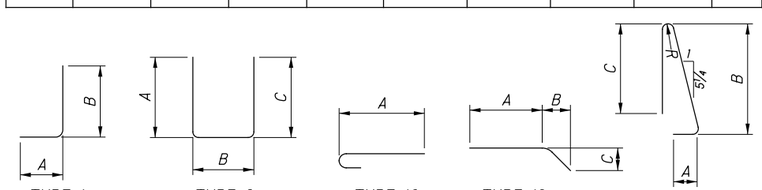

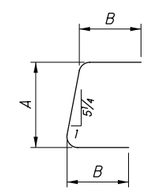

TYPE-28

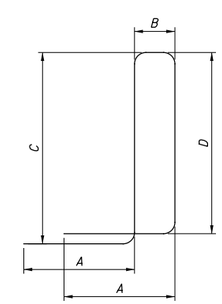

TYPE-30

NOTES:

1. SERIES BARS - EACH BAR VARIES BY TABULATED AMOUNT.
2. ALL DIMENSIONS ARE OUT TO OUT.
3. TYPE "STR" INDICATES STRAIGHT BAR.
4. THE BAR SIZE NUMBER IS SPECIFIED IN THE "MARK" COLUMN. THE FIRST DIGIT INDICATES THE BAR SIZE NUMBER. FOR EXAMPLE, EA501 IS A #5 BAR SIZE.
5. ALL BARS SHALL BE EPOXY COATED UNLESS NOTED OTHERWISE.
6. SUBTOTALS AND TOTAL WEIGHTS ARE FOR INFORMATIONAL PURPOSES ONLY. IF THE REINFORCING LIST PROVIDED IN THE PLANS IS USED IT SHALL BE VERIFIED BY THE CONTRACTOR. ANY REVISIONS IN THE REINFORCING STEEL LIST AS SHOWN IN THE PLANS WILL NOT BE REASON FOR ADJUSTMENT IN THE BID PRICE FOR STRUCTURAL CONCRETE.
7. USE STANDAND HOOKS FOR ENDS OF BARS NOT SPECIFICALLY DIMENSIONED IN DETAILS.

NO.	DATE	DESCRIPTION
1	2024-09-10	RECORD DRAWINGS
0	2019-06-20	RFC

ISSUE RECORD

DESIGN AGENCY
Michael Baker INTERNATIONAL
1111 SUPERIOR AVE E., SUITE 2300, CLEVELAND, OH 44114

DESIGNED	DRAWN	REVIEWED	DATE
JCC	JCC	JWB	3/15/19
CHECKED	REVISED	STRUCTURE FILE NUMBER	
ETB		1801518	

RECORD PLANS

REINFORCING SCHEDULE (5 OF 5)

CUY-010-1978R
OH-10 EASTBOUND OVER GCRTA BLUE AND GREEN LINES

RECORD PLANS

CUY-IR490/SR010-2.09/19.28
PID No. 96833

RECORD PLANS

BU-19 - GCRTA BLUE/GREEN BRIDGES & CATENARY MODIFICATIONS
...\Sheets\010_1978R_SL401.dgn 11/21/2024 4:42:02 PM Rohit.Bk

ISSUE RECORD		
NO.	DATE	DESCRIPTION
0	2019-06-20	RFC
1	2021-05-18	DC056
2	2024-09-10	RECORD DRAWINGS

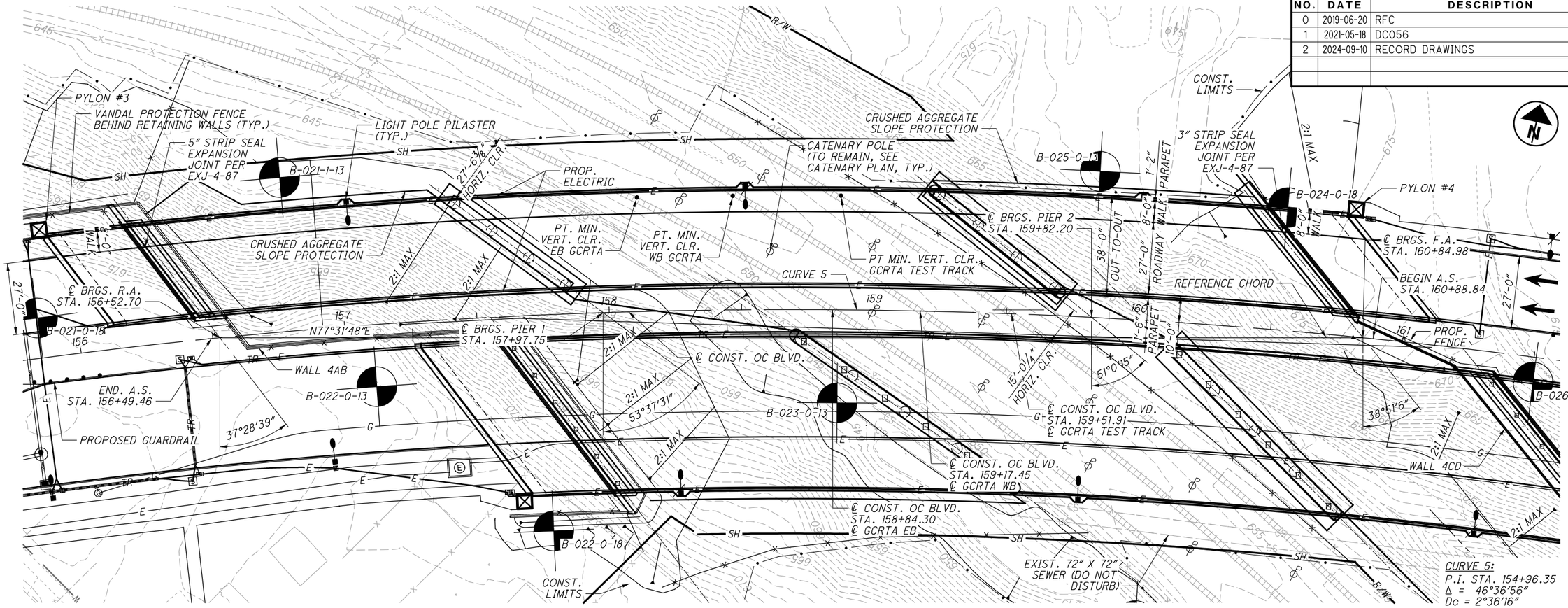

PLAN

NOTE: SEE SHEET 2 OF 46 FOR BENCHMARKS, LEGEND, PROPOSED STRUCTURE BLOCK, AND ADDITIONAL NOTES

CURVE 5:
P.I. STA. 154+96.35
Δ = 46°36'56"
Dc = 2°36'16"
R = 2200.00'
T = 947.83'
L = 1789.91'
E = 195.49'

● POINTS OF MINIMUM VERTICAL CLEARANCE

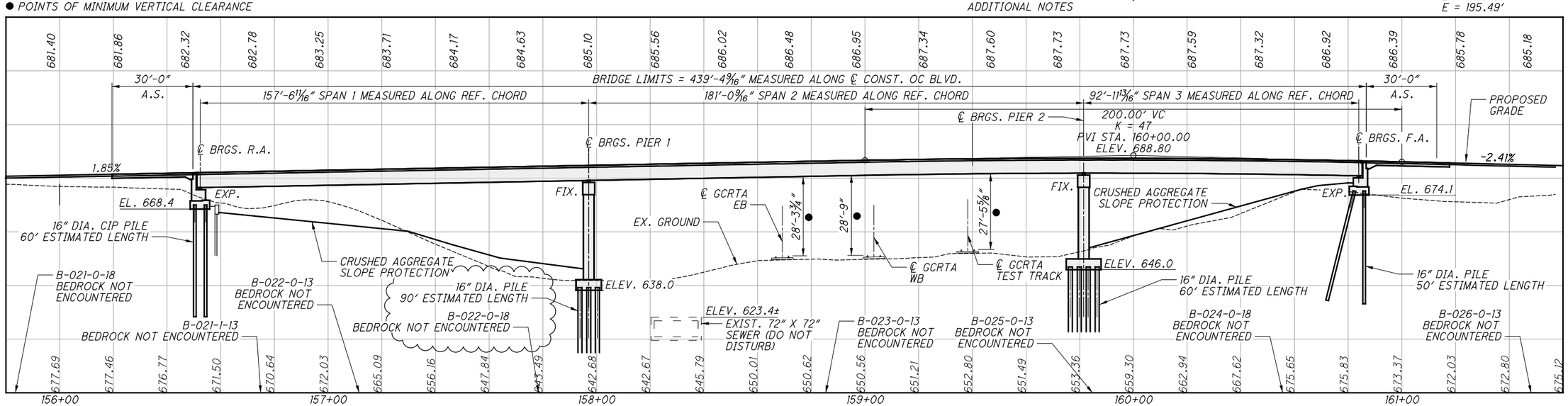

PROFILE

(SEE GRADING PLANS IN BU-15 FOR ADDITIONAL INFORMATION.)

DESIGN AGENCY
Michael Baker INTERNATIONAL
1111 SUPERIOR AVE E., SUITE 2300, CLEVELAND, OH 44114

DESIGNED	DRAWN	REVIEWED	DATE
GMC	GMC	JWB	3/01/19
CHECKED	REVISED	STRUCTURE FILE NUMBER	
MKB		1801517	

RECORD PLANS

CUYAHOGA CO.
STA. 156+49.46
STA. 160+88.84

SITE PLAN (1 OF 2)
CUY-010-1976L
OH-10 WESTBOUND OVER GCRTA BLUE AND GREEN LINES

RECORD PLANS

CUY-IR490/SR010-2.09/19.28
PID No. 96833

RECORD PLANS

BU-19 - GCRTA BLUE/GREEN BRIDGES & CATENARY MODIFICATIONS
...\Sheets\010_1976L_SP501.dgn 11/21/2024 4:42:14 PM Rohit.Bk

ISSUE RECORD		
NO.	DATE	DESCRIPTION
0	2019-06-20	RFC
1	2024-09-10	RECORD DRAWINGS

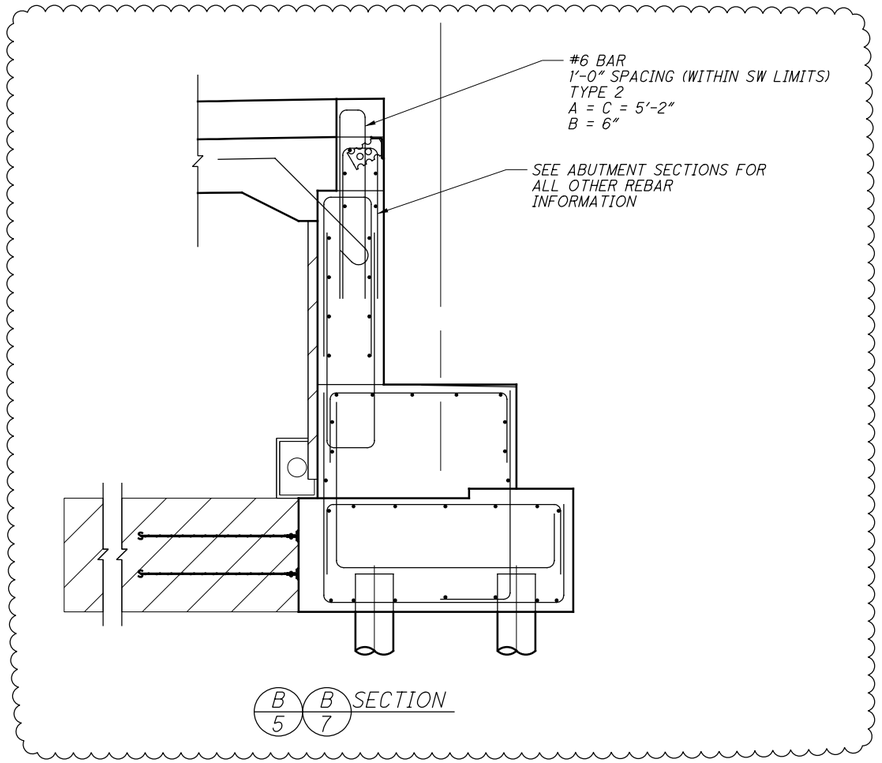

BENCHMARK DATA

BM #1 STA. 156+09.77 OC, ELEV. 676.68', OFFSET 203.31 RT,
BM #2 STA. 158+90.59 OC, ELEV. 668.04', OFFSET 266.47 LT

FOR ADDITIONAL BENCHMARK INFORMATION SEE BU-15

NOTES

EARTHWORK LIMITS SHOWN ARE APPROXIMATE. ACTUAL SLOPES SHALL CONFORM TO PLAN CROSS SECTIONS AND GRADING PLANS.

DESIGN TRAFFIC:
2020 ADT = 40,630 2020 ADTT = 2438
2040 ADT = 40,630 2040 ADTT = 2438
DIRECTIONAL DISTRIBUTION = 0.50
DESIGN SPEED: 40 MPH

SEE BU-20 FOR WALL 4AB AND WALL 4CD

SEE BU-27 STREET LEVEL LIGHTING FOR ADDITIONAL LIGHTING INFORMATION, INCLUDING PARAPET MOUNTED PULLBOX DETAILS.

MINIMUM VERTICAL CLEARANCE

PT OF MIN. VERTICAL CLEARANCE BETWEEN GCRTA EB AND STRUCTURE AT STA. 158+15.00 43.08 LT

PT OF MIN. VERTICAL CLEARANCE BETWEEN GCRTA WB AND STRUCTURE AT STA. 158+44.26 43.08 LT

PT OF MIN. VERTICAL CLEARANCE BETWEEN GCRTA TEST TRACK AND STRUCTURE AT STA. 158+89.92 43.08 LT

LEGEND

BORING LOCATION

● 17'-0" REQUIRED MINIMUM VERTICAL CLEARANCE (GCRTA)
27.47' ACTUAL MINIMUM VERTICAL CLEARANCE

PROPOSED STRUCTURE

TYPE: THREE-SPAN CONTINUOUS, COMPOSITE
WELDED PLATE GIRDER SUPERSTRUCTURE
SUPPORTED ON REINFORCED CONCRETE SUBSTRUCTURE

SPANS: 157'-6 11/16", 181'-0 9/16", 92'-11 13/16" MEASURED C/C BEARINGS ALONG REFERENCE CHORD

ROADWAY: 27'-0" CURB TO TOE PARAPET, 8'-0" WALK LT. ONLY

LOADING: HL-93 AND 60 PSF FWS

SKEW VARIES: 37°28'39" R.F.@ R.A.; 53°37'31" R.F.@ P1; 51°0'15" R.F.@ P2; 38°51'06" R.F.@ F.A.

APPROACH SLABS: AS-1-15 (30'-0" LONG)
TYPE C INSTALLATION PER AS-2-15

ALIGNMENT: CURVED 2° 36' 16" RT.

NORMAL CROWN: 0.02 FT/FT

COORDINATES: LATITUDE 41° 28' 59.47" N
LONGITUDE 81° 38' 28.52" W

DESIGN AGENCY
Michael Baker INTERNATIONAL
1111 SUPERIOR AVE E. SUITE 2300, CLEVELAND, OH 44114

RECORD PLANS

DESIGNED	DRAWN	REVIEWED	DATE
GMC	GMC	JWB	3/01/19
CHECKED	REVISED	STRUCTURE FILE NUMBER	
MKB		1801517	

CUYAHOGA CO.
STA. 156+49.46
STA. 160+88.84

SITE PLAN (2 OF 2)
CUY-010-1976L
OH-10 WESTBOUND OVER GCRTA BLUE AND GREEN LINES

RECORD PLANS

CUY-IR490/SR010-2.09/19.28
PID No. 96833

RECORD PLANS

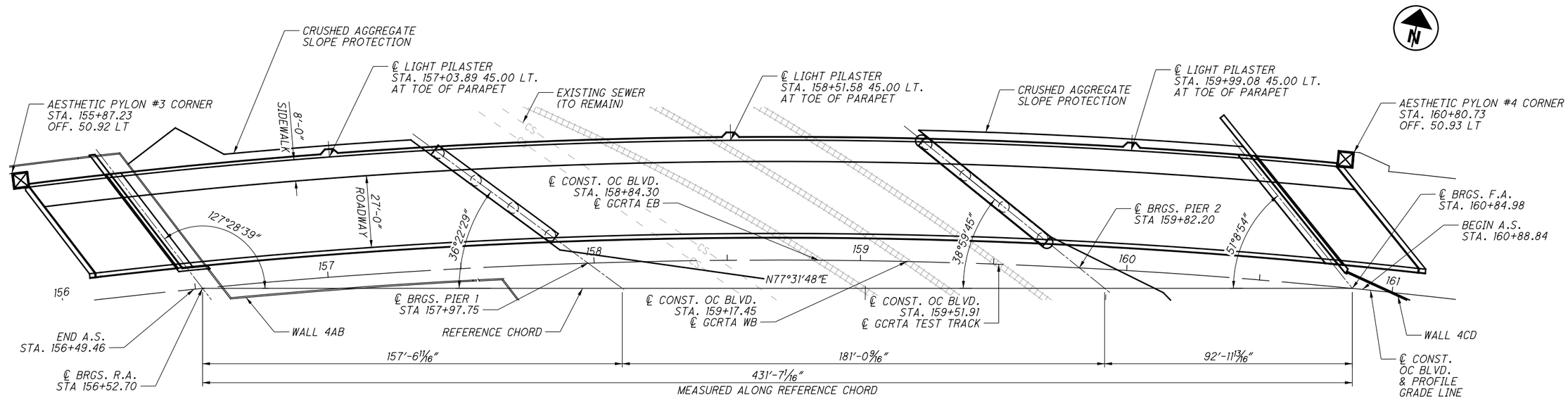

WESTBOUND PLAN

SEE ABUTMENT PLANS FOR DRAINAGE DETAILS

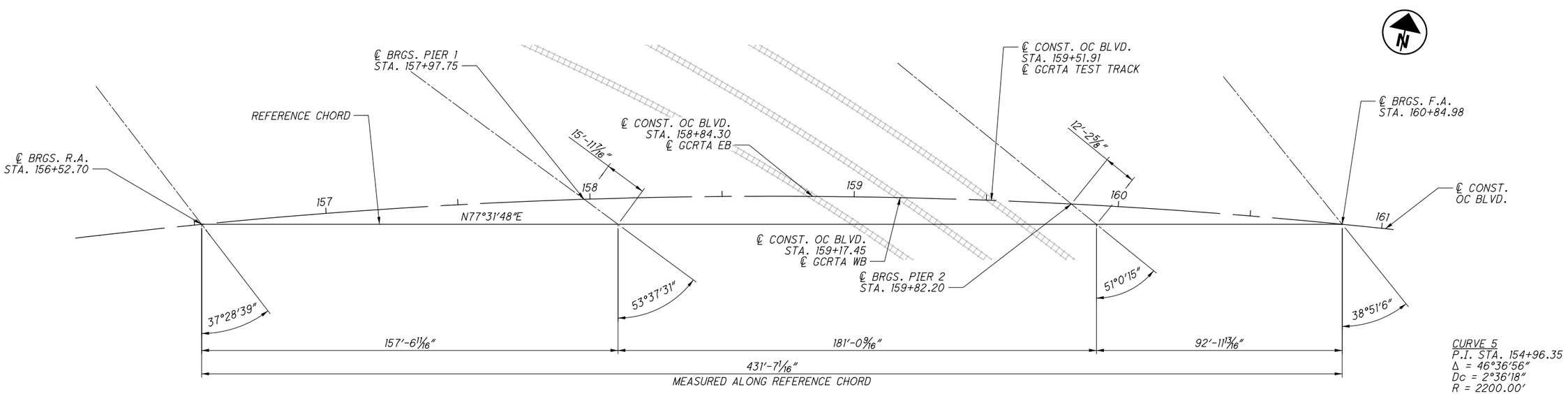

CURVE 5
P.I. STA. 154+96.35
Δ = 46°36'56"
Dc = 2°36'18"
R = 2200.00'
T = 947.83'
L = 1789.91'
E = 195.49'

WESTBOUND GEOMETRIC LAYOUT

NOTES:

1. REFERENCE CHORD IS A STRAIGHT LINE DISTANCE OF 431'-7 1/16" BETWEEN STA. 156+52.70 AND STA. 160+84.98.
2. ARC LENGTH = 432'-3 3/8"
3. SKEW ANGLES ARE MEASURED PERPENDICULAR TO THE REFERENCE CHORD.

NO.	DATE	DESCRIPTION
0	2019-06-20	RFC

ISSUE RECORD

DESIGN AGENCY
Michael Baker INTERNATIONAL
1111 SUPERIOR AVE E., SUITE 2300, CLEVELAND, OH 44114

DESIGNED	DRAWN	REVIEWED	DATE
GMC	GMC	JWB	3/01/19
CHECKED	REVISED	STRUCTURE FILE NUMBER	
MKB		1801517	

RECORD PLANS

GENERAL PLAN
CUY-010-1976L
OH-10 WESTBOUND OVER GCRTA BLUE AND GREEN LINES

RECORD PLANS

CUY-IR490/SR010-2.09/19.28
PID No. 96833

RECORD PLANS

BU-19 - GCRTA BLUE/GREEN BRIDGES & CATENARY MODIFICATIONS
...\Sheets\010_1976L_SG501.dgn 6/27/2019 5:00:38 PM Christopher.Lemley

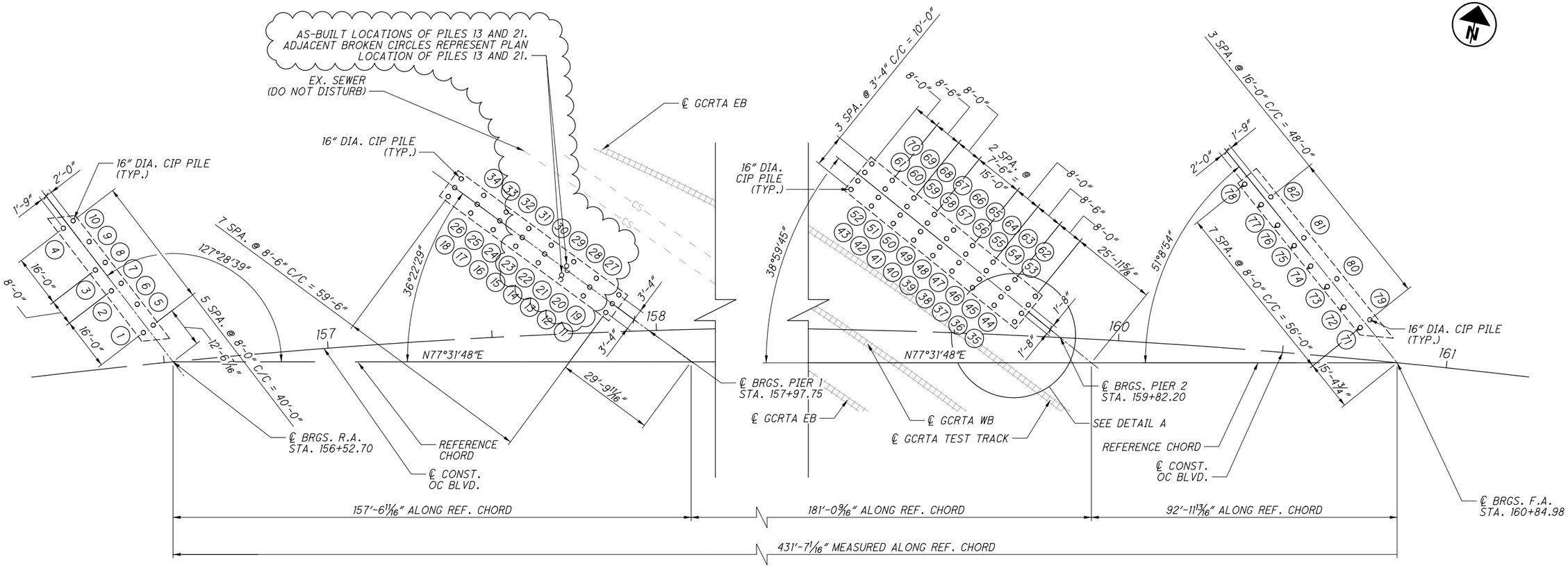

PILE LAYOUT

PILE SCHEDULE			
SUBSTRUCTURE UNIT	PILE DIAMETER	ORDER LENGTH	CUTOFF ELEVATION
REAR ABUTMENT	16"	65'-0"	669.40
PIER 1	16"	95'-0"	639.00
PIER 2	16"	65'-0"	647.00
FORWARD ABUTMENT	16"	55'-0"	675.10

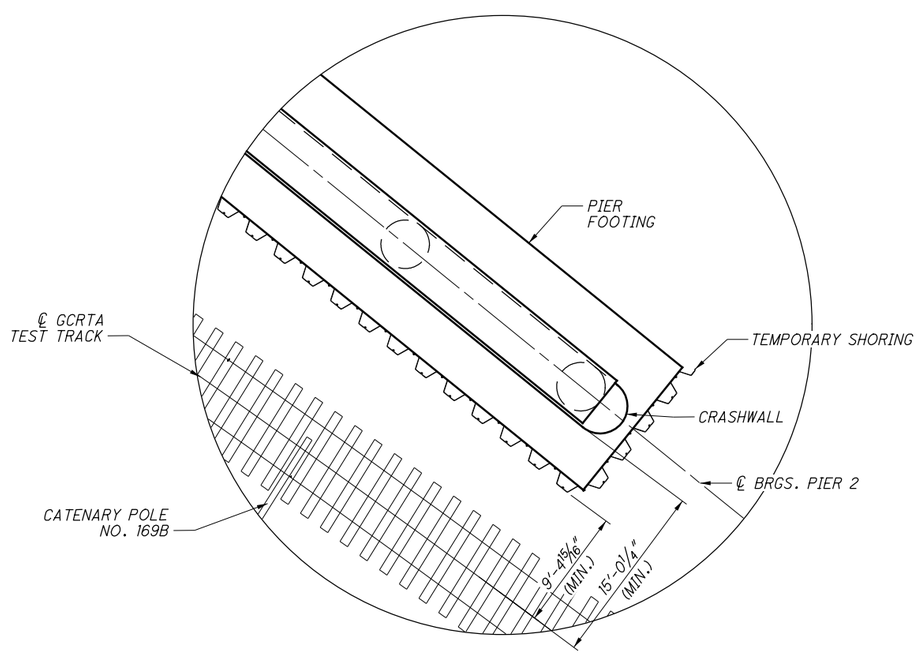

DETAIL A

NOTES

1. THE OUTSIDE PILES (11-18 & 27-34) WERE DRIVEN TO 90' FROM 70' TO ACHIEVE THE REQUIRED UBV. THE MIDDLE ROW OF PILES (19-26) REMAINED AT 70', AS DRIVEN.

LEGEND

(#) INDICATES PROPOSED PILE NUMBER

○ INDICATES PROPOSED VERTICAL PILE

INDICATES PROPOSED BATTERED PILE

NO.	DATE	DESCRIPTION
1	2024-09-10	RECORD DRAWINGS
0	2019-06-20	RFC

ISSUE RECORD

DESIGN AGENCY
Michael Baker INTERNATIONAL
1111 SUPERIOR AVE E., SUITE 2300, CLEVELAND, OH 44114

DESIGNED	DRAWN	REVIEWED	DATE
GMC	GMC	JWB	3/15/19
CHECKED	REVISED	STRUCTURE FILE NUMBER	
MKB		1801517	

RECORD PLANS

FOUNDATION PLAN
CUY-010-1976L
OH-10 WESTBOUND OVER GCRTA BLUE AND GREEN LINES

RECORD PLANS

CUY-IR490/SR010-2.09/19.28
PID No. 96833

RECORD PLANS

BU-19 - GCRTA BLUE/GREEN BRIDGES & CATENARY MODIFICATIONS
...\Sheets\010_1976L_S0501.dgn 12/12/2024 9:16:55 AM Rohit.Bk

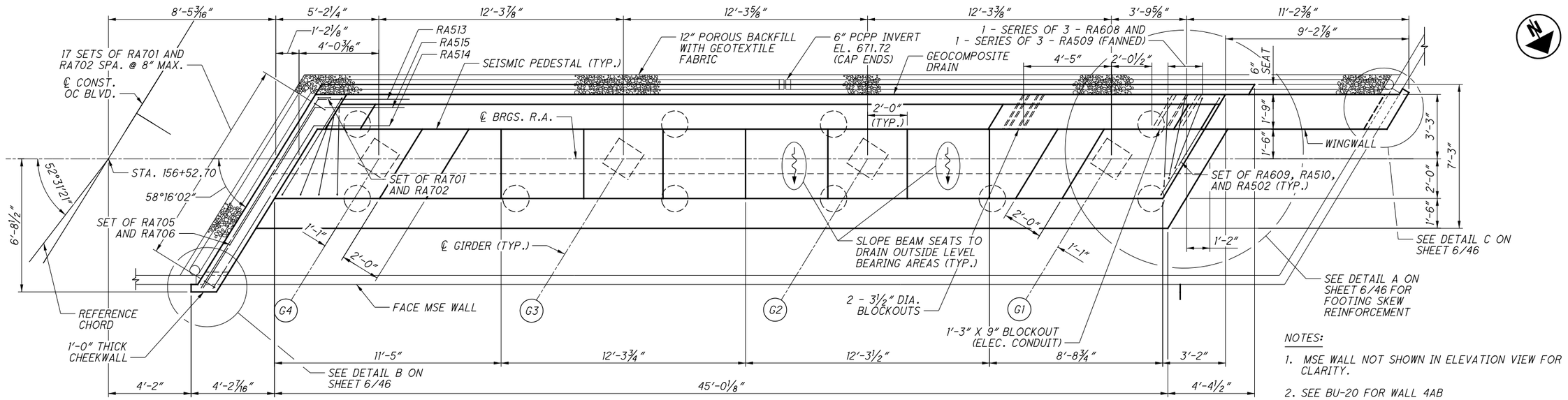

REAR ABUTMENT PLAN

NOTES:

1. MSE WALL NOT SHOWN IN ELEVATION VIEW FOR CLARITY.
2. SEE BU-20 FOR WALL 4AB
3. EPOXY COATED REINFORCING STEEL PLACED IN CONFLICT WITH THE INTERACTION BETWEEN THE WINGWALL/CHEEKWALL AND THE MSE WALL OR UTILITIES SHALL BE FIELD CUT.

REAR ABUTMENT	
POINT	ELEVATION
A	682.02
B	681.18
C	681.92
G1	674.45
G2	674.65
G3	674.98
G4	675.31

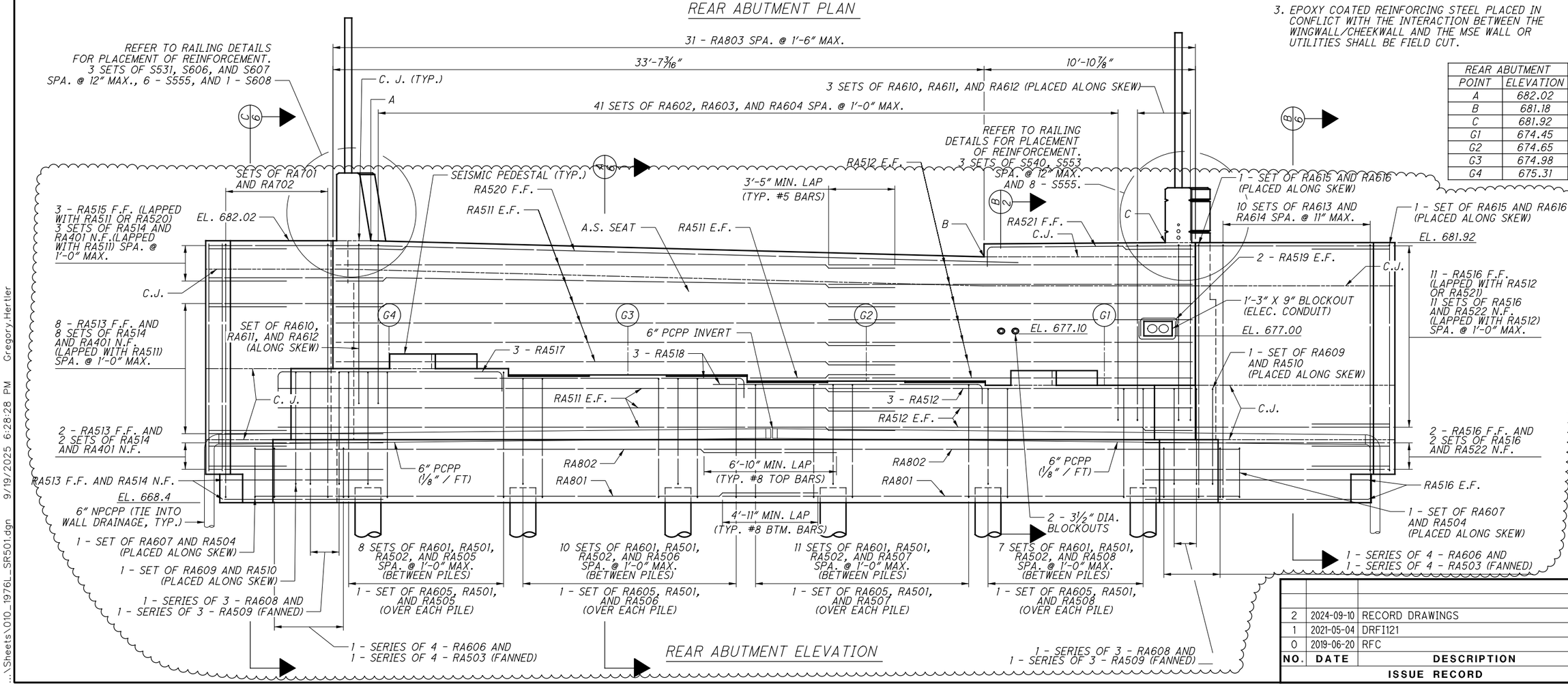

REAR ABUTMENT ELEVATION

NO.	DATE	DESCRIPTION
2	2024-09-10	RECORD DRAWINGS
1	2021-05-04	DRFI121
0	2019-06-20	RFC

ISSUE RECORD

DESIGN AGENCY
Michael Baker INTERNATIONAL
1111 SUPERIOR AVE E., SUITE 2300, CLEVELAND, OH 44114

DESIGNED	DRAWN	REVIEWED	DATE
SSW	SSW	JWB	3/15/19
CHECKED	REVISED	STRUCTURE FILE NUMBER	
CDC		1801517	

RECORD PLANS

REAR ABUTMENT PLAN AND ELEVATION
CUY-010-1976L
OH-10 WESTBOUND OVER GCRTA BLUE AND GREEN LINES

CUY-IR490/SR010-2.09/19.28
PID No. 96833

RECORD PLANS

BU-19 - GCRTA BLUE/GREEN BRIDGES & CATENARY MODIFICATIONS
...\Sheets\010_1976L_SR501.dgn 9/19/2025 6:28:28 PM Gregory.Hertler

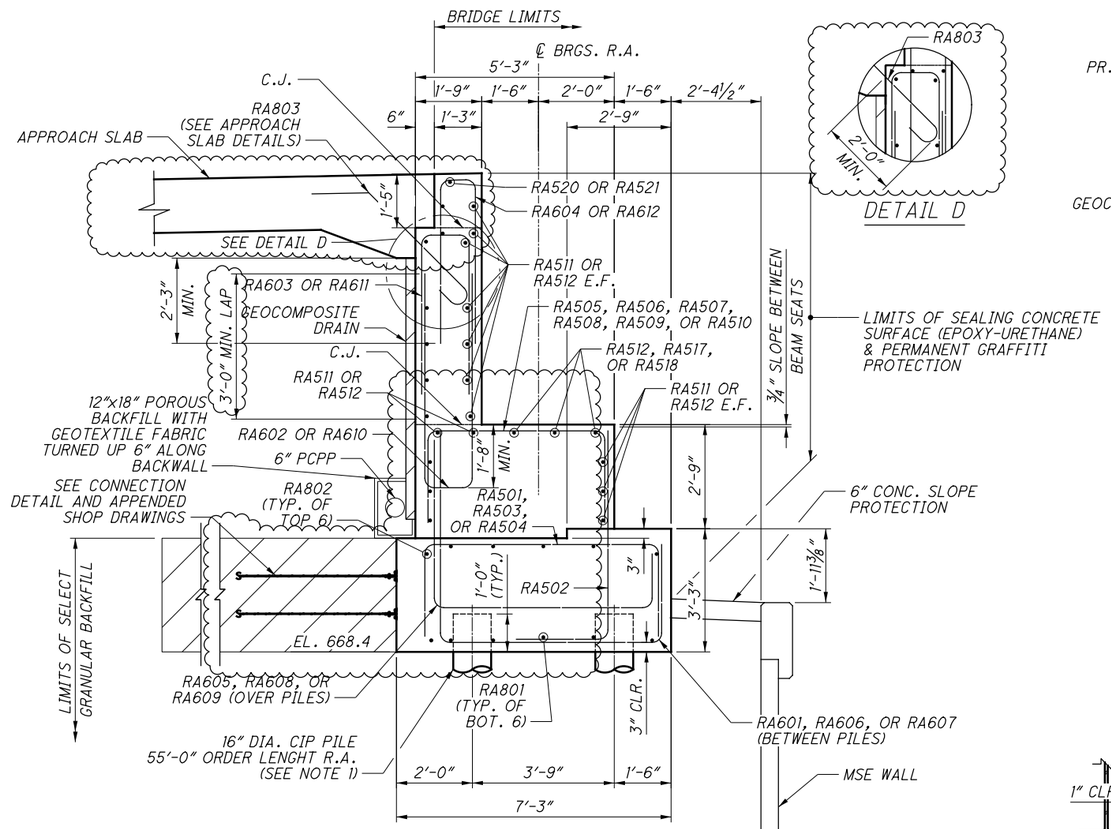

A/5 SECTION

DETAIL D

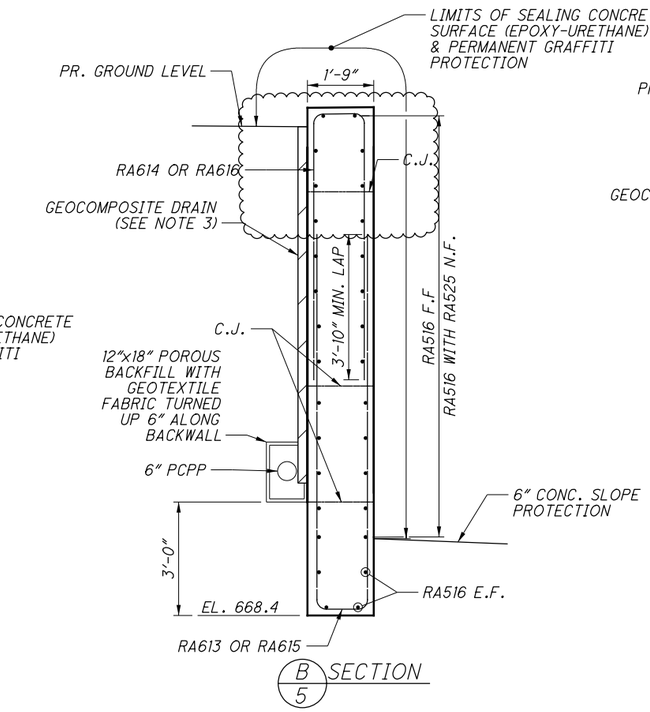

B/5 SECTION

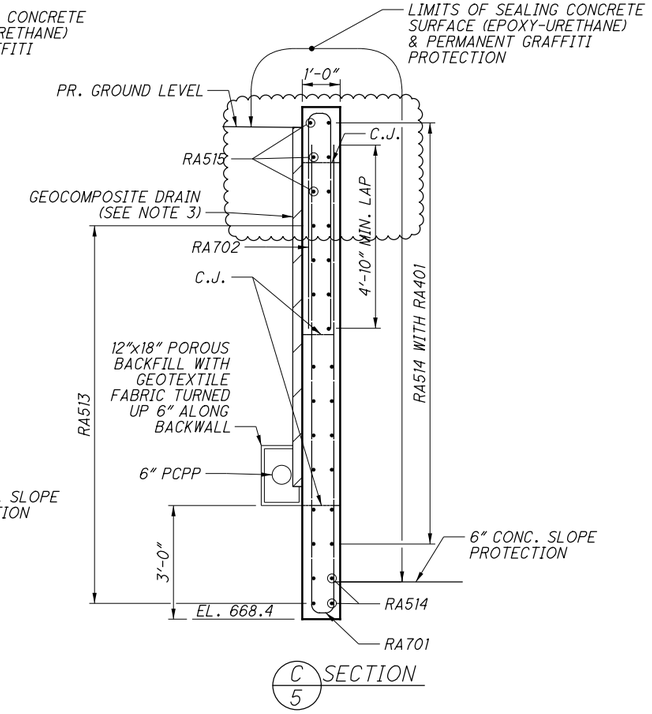

C/5 SECTION

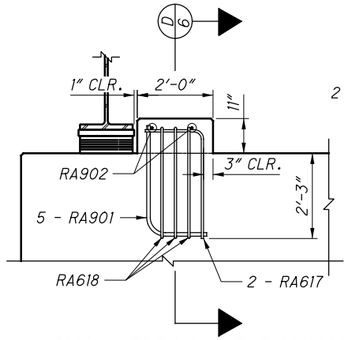

SEISMIC PEDESTAL ELEVATION

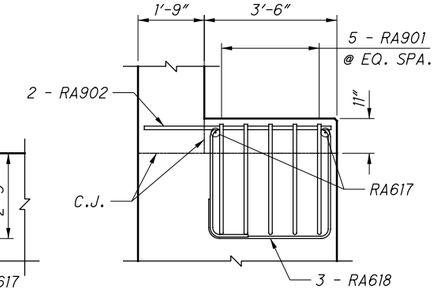

D/6 SECTION

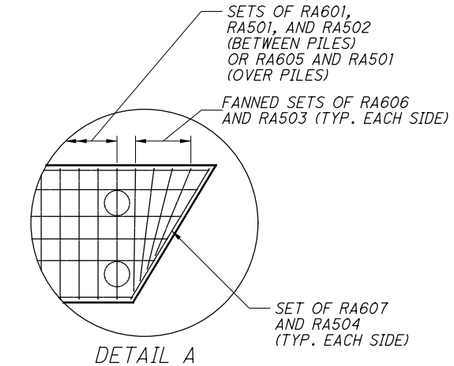

DETAIL A

(RIGHT SIDE OF FOOTING SHOWN, MIRROR ON LEFT SIDE)

TABLE 1	
REAR ABUTMENT JOINT OPENING TABLE (5" STRIP SEAL)	
TEMPERATURE °F	DIMENSION "A"
30	3 1/4"
40	3"
50	2 3/4"
60	2 1/2"
70	2 1/4"
80	2"
90	1 3/4"

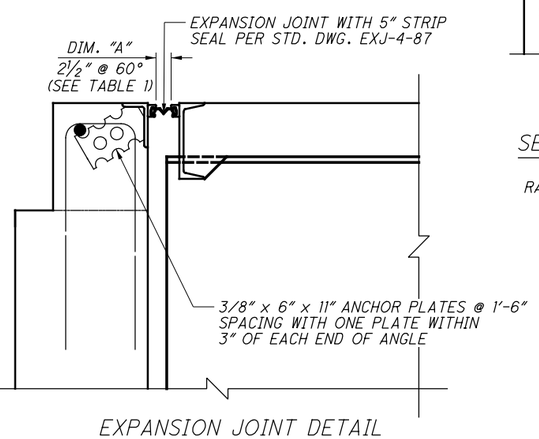

EXPANSION JOINT DETAIL

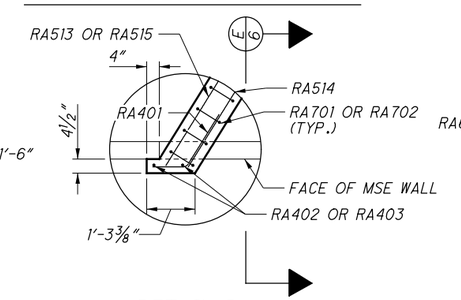

DETAIL B

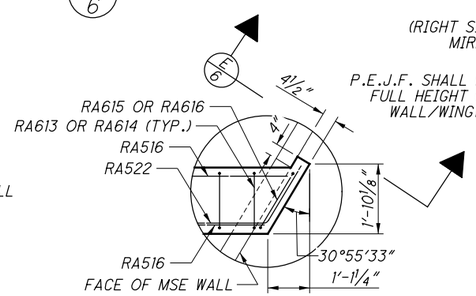

DETAIL C

P.E.J.F. SHALL EXTEND THE FULL HEIGHT OF THE MSE WALL/WINGWALL JOINT

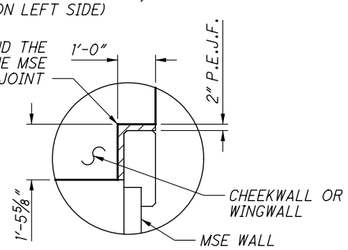

E/6 SECTION (SEE DETAILS B AND C)

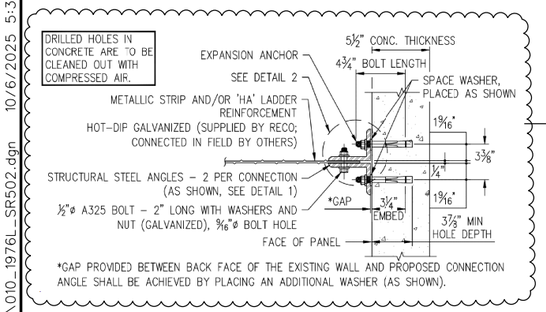

CONNECTION DETAIL

NOTES:

1. YELLOW JACKET SLEEVES (FOUNDATION TECHNOLOGIES, INC., 400 PROGRESS INDUSTRIAL BLVD, LAWRENCEVILLE, GA 30043) WILL BE USED IN PLACE OF STANDARD PIPE SLEEVES. SEE BU-20 FOR ADDITIONAL INFORMATION.

2. THE CONTRACTOR SHALL PROVIDE REINFORCING STRAP ANCHORED TO ABUTMENT THAT PROVIDES 7.66 K/FT (UNFACTORED) RESISTANCE APPLIED PERPENDICULAR TO THE FACE OF THE ABUTMENT AT THE BASE OF CONCRETE FOOTING. REINFORCING STRIPS SHALL MEET REQUIREMENTS OF ODOT SUPPLEMENTAL SPECIFICATION 840. STRAPS SHALL BE METALLIC. CONTRACTOR DESIGN FOR REINFORCING STRAPS SHALL MEET REQUIREMENTS OF SS 840.

3. REFER TO GENERAL NOTES FOR ADDITIONAL INFORMATION.

4. PROVIDE 2" CONCRETE COVER ON REINFORCEMENT BARS UNLESS NOTED OTHERWISE.

NO.	DATE	DESCRIPTION
1	2024-09-10	RECORD DRAWINGS
0	2019-06-20	RFC

ISSUE RECORD

DESIGN AGENCY
Michael Baker INTERNATIONAL
1111 SUPERIOR AVE E., SUITE 2300, CLEVELAND, OH 44114

DESIGNED	DRAWN	REVIEWED	DATE
SSW	SSW	JWB	3/15/19
CHECKED	REVISED	STRUCTURE FILE NUMBER	
CDC		1801517	

RECORD PLANS

REAR ABUTMENT SECTIONS
CUY-010-1976L
OH-10 WESTBOUND OVER GCRTA BLUE AND GREEN LINES

RECORD PLANS

CUY-IR490/SR010-2.09/19.28
PID No. 96833

BU-19 - GCRTA BLUE/GREEN BRIDGES & CATENARY MODIFICATIONS
...\Sheets\010_1976L_SR502.dgn 10/6/2025 5:39:19 PM Gregory.Hertler

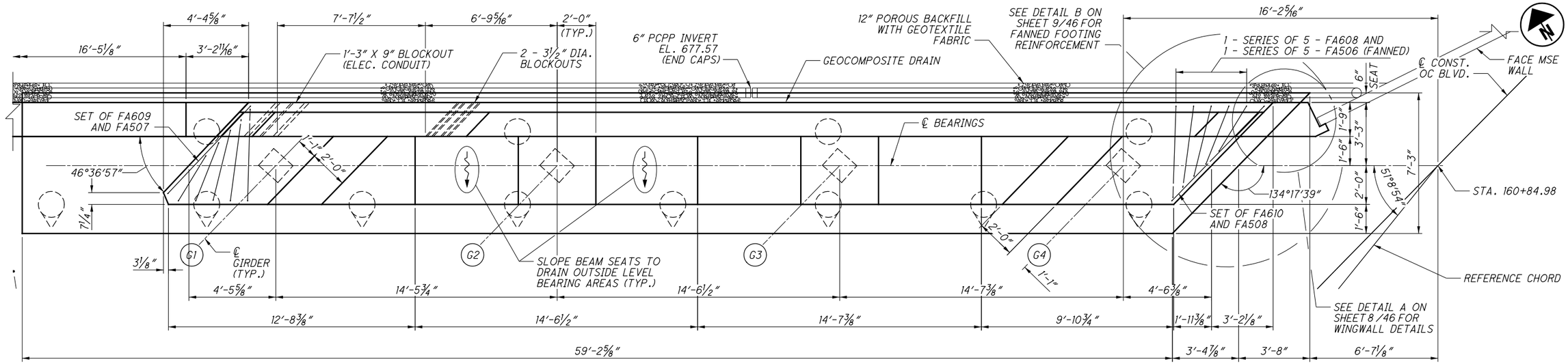

FORWARD ABUTMENT PLAN

FORWARD ABUTMENT	
POINT	ELEVATION
A	687.48
B	686.56
C	686.68
G1	680.20
G2	680.16
G3	680.22
G4	680.26

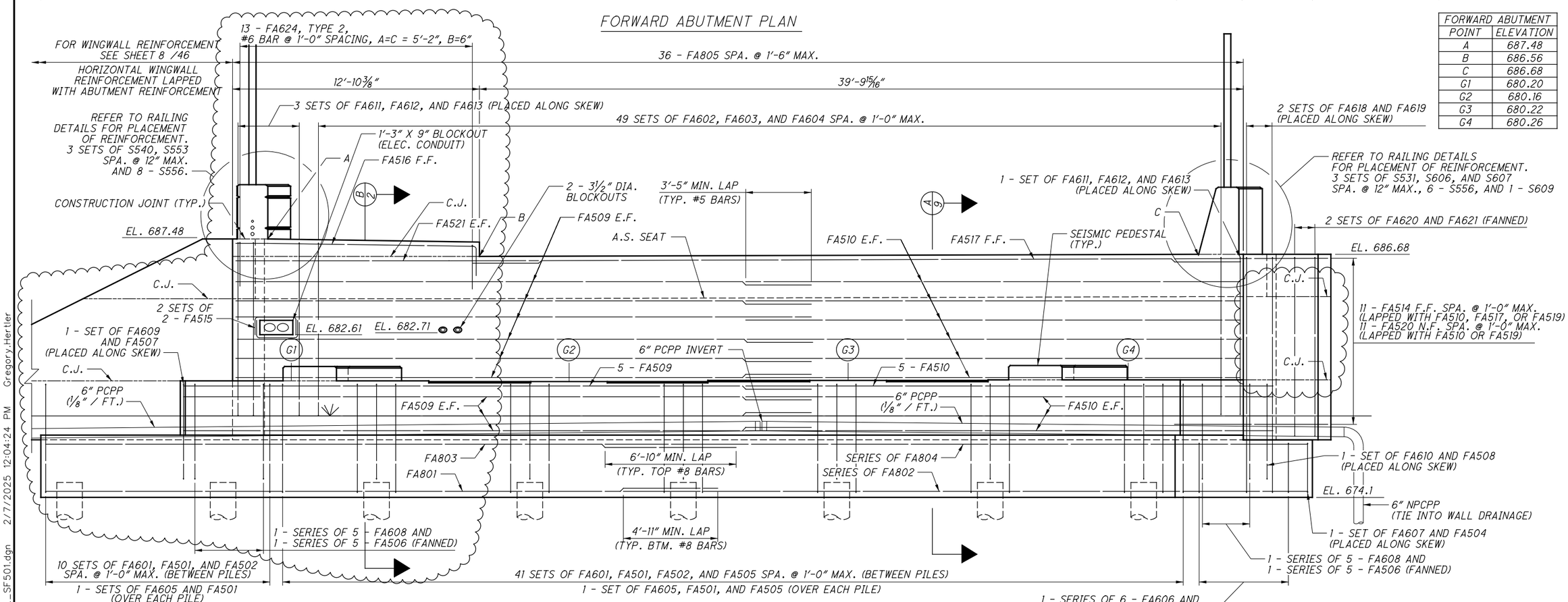

FORWARD ABUTMENT ELEVATION

NOTES:

1. EPOXY COATED REINFORCING STEEL PLACED IN CONFLICT WITH THE INTERACTION BETWEEN THE WINGWALL/CHEEKWALL AND THE MSE WALL OR UTILITIES SHALL BE FIELD CUT.

NO.	DATE	DESCRIPTION
2	2024-09-10	RECORD DRAWINGS
1	2021-05-04	DRF1121
0	2019-06-20	RFC

ISSUE RECORD

DESIGN AGENCY
Michael Baker INTERNATIONAL
1111 SUPERIOR AVE E., SUITE 2300, CLEVELAND, OH 44114

DESIGNED	DRAWN	REVIEWED	DATE
SSW	SSW	JWB	3/15/19
CHECKED	REVISED	STRUCTURE FILE NUMBER	
CDC		1801517	

RECORD PLANS

FORWARD ABUTMENT PLAN AND ELEVATION
CUY-010-1976L
OH-10 WESTBOUND OVER GCRTA BLUE AND GREEN LINES

RECORD PLANS

CUY-IR490/SR010-2.09/19.28
PID No. 96833

BU-19 - GCRTA BLUE/GREEN BRIDGES & CATENARY MODIFICATIONS
...\Sheets\010_1976L_SF501.dgn 2/7/2025 12:04:24 PM Gregory.Hertler

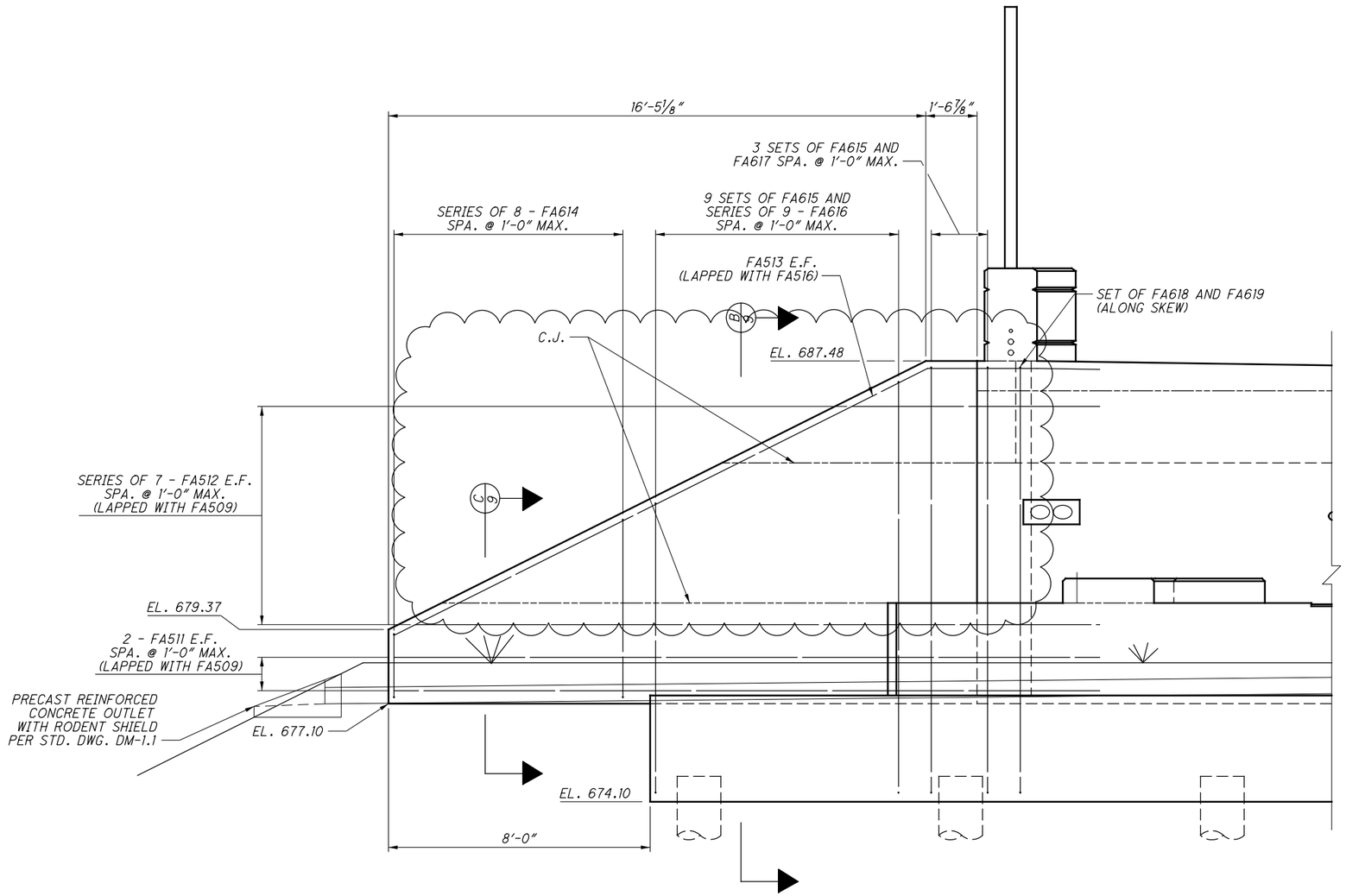

WINGWALL ELEVATION

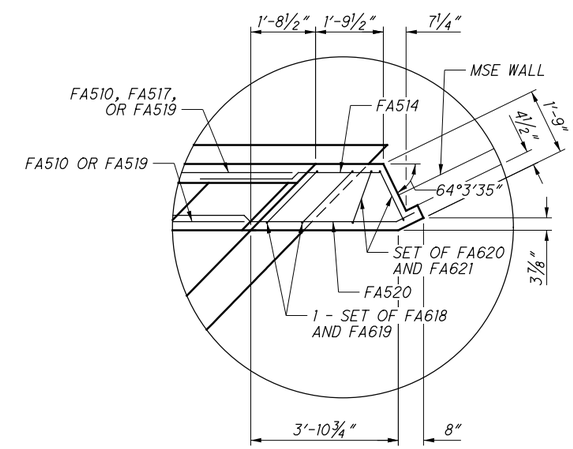

DETAIL A

NOTES:

1. REFER TO GENERAL NOTES FOR ADDITIONAL INFORMATION.

NO.	DATE	DESCRIPTION
1	2024-09-10	RECORD DRAWINGS
0	2019-06-20	RFC

ISSUE RECORD

DESIGN AGENCY
Michael Baker INTERNATIONAL
1111 SUPERIOR AVE E., SUITE 2300, CLEVELAND, OH 44114

DESIGNED	DRAWN	REVIEWED	DATE
SSW	SSW	JWB	3/15/19
CHECKED	REVISED	STRUCTURE FILE NUMBER	
CDC		1801517	

RECORD PLANS

FORWARD ABUTMENT WINGWALL DETAILS
CUY-010-1976L
OH-10 WESTBOUND OVER GCRTA BLUE AND GREEN LINES

CUY-IR490/SR010-2.09/19.28
PID No. 96833

RECORD PLANS

BU-19 - GCRTA BLUE/GREEN BRIDGES & CATENARY MODIFICATIONS
...\Sheets\010_1976L_SF503.dgn 11/21/2024 4:45:26 PM Rohit.Bk

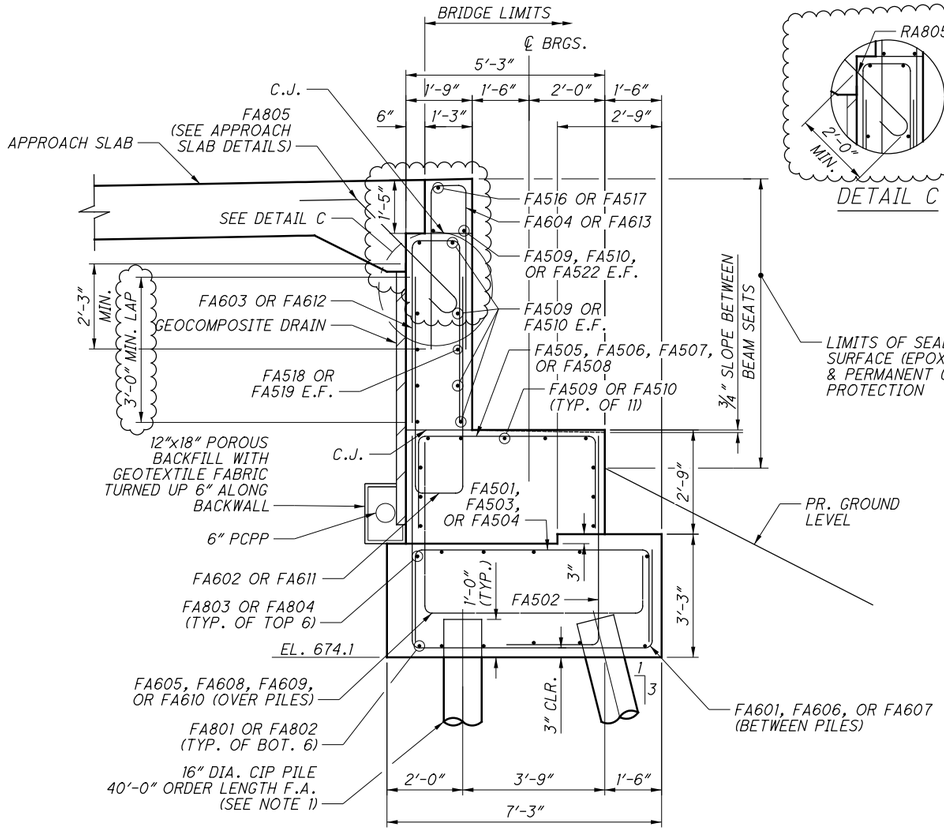

A SECTION
7

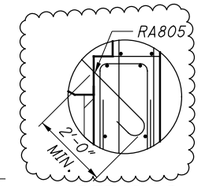

DETAIL C

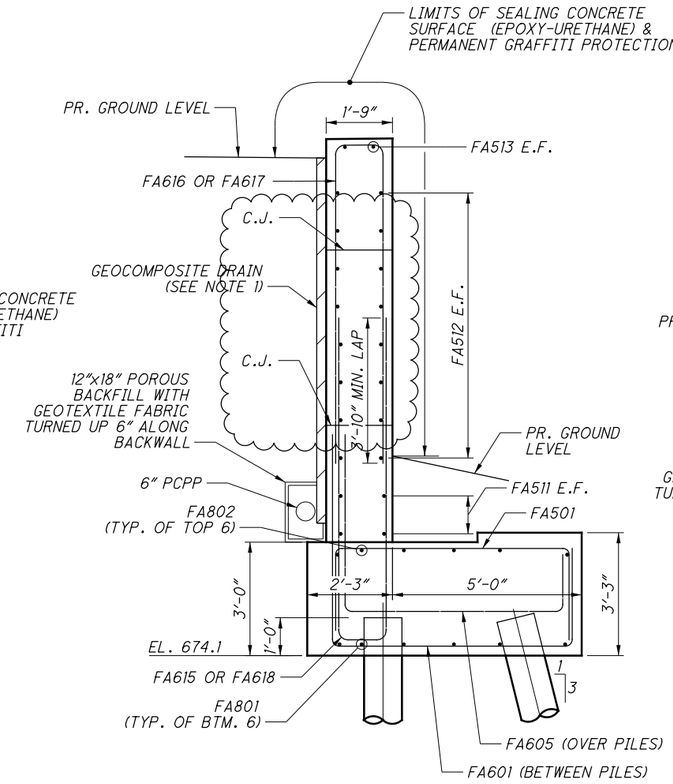

B SECTION
8

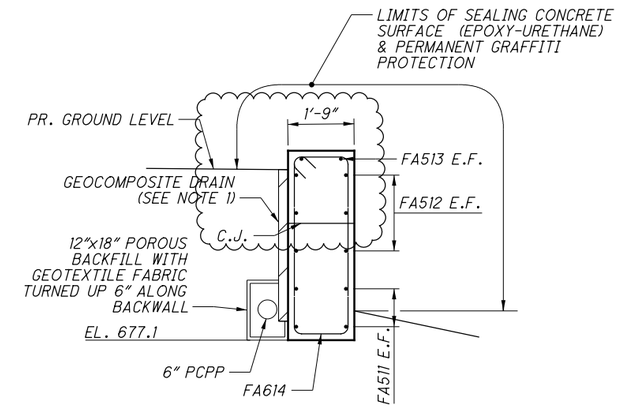

C SECTION
8

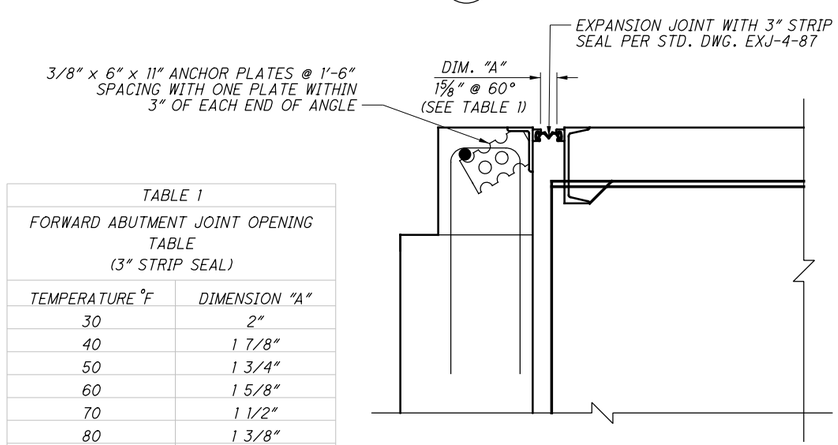

EXPANSION JOINT DETAILS

TABLE 1	
FORWARD ABUTMENT JOINT OPENING TABLE (3" STRIP SEAL)	
TEMPERATURE °F	DIMENSION "A"
30	2"
40	1 7/8"
50	1 3/4"
60	1 5/8"
70	1 1/2"
80	1 3/8"
90	1 1/4"

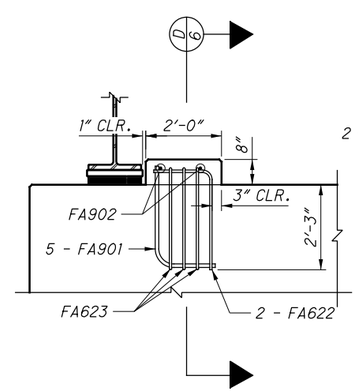

SEISMIC PEDESTAL ELEVATION

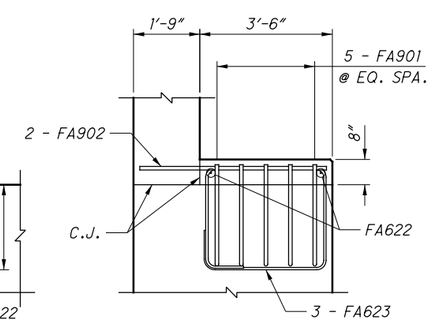

D SECTION
6

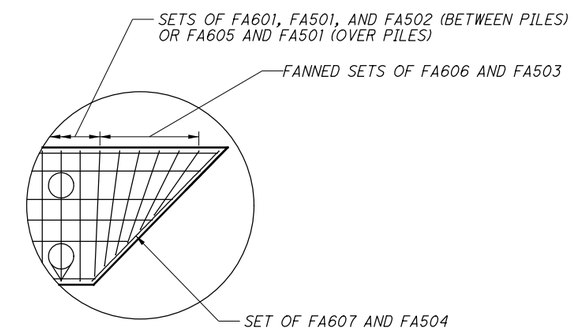

DETAIL B

NOTES:

1. REFER TO GENERAL NOTES FOR ADDITIONAL INFORMATION.
2. PROVIDE 2" CONCRETE COVER ON REINFORCEMENT BARS UNLESS NOTED OTHERWISE.

NO.	DATE	DESCRIPTION
1	2024-09-10	RECORD DRAWINGS
0	2019-06-20	RFC

ISSUE RECORD

DESIGN AGENCY
Michael Baker INTERNATIONAL
1111 SUPERIOR AVE E., SUITE 2300, CLEVELAND, OH 44114

DESIGNED	DRAWN	REVIEWED	DATE
SSW	SSW	JWB	3/15/19
CHECKED	REVISED	STRUCTURE FILE NUMBER	
CDC		1801517	

RECORD PLANS

FORWARD ABUTMENT SECTIONS
CUY-010-1976L
OH-10 WESTBOUND OVER GCRTA BLUE AND GREEN LINES

RECORD PLANS

CUY-IR490/SR010-2.09/19.28
PID No. 96833

RECORD PLANS

BU-19 - GCRTA BLUE/GREEN BRIDGES & CATENARY MODIFICATIONS
...\Sheets\010_1976L_SF502.dgn 9/19/2025 6:28:59 PM Gregory:Hertler

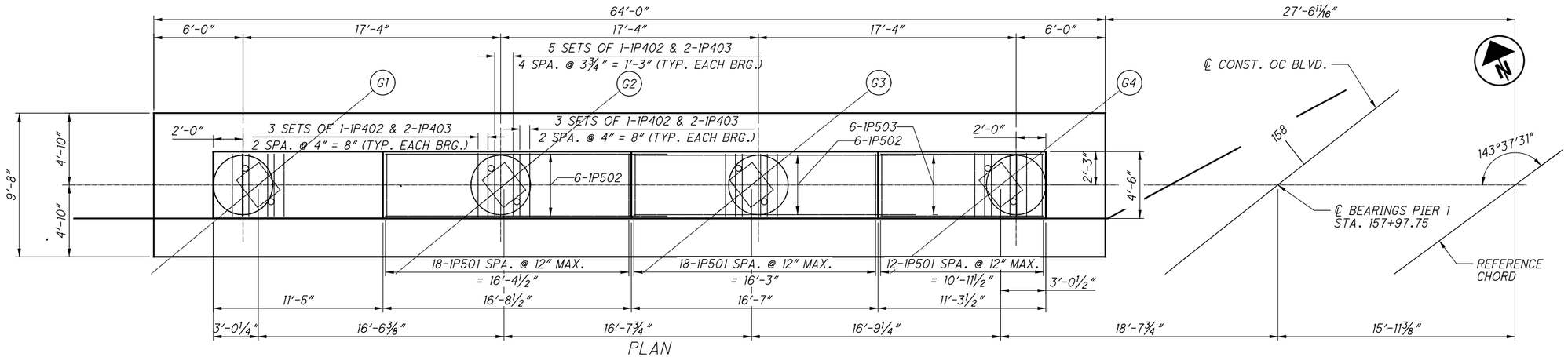

PLAN

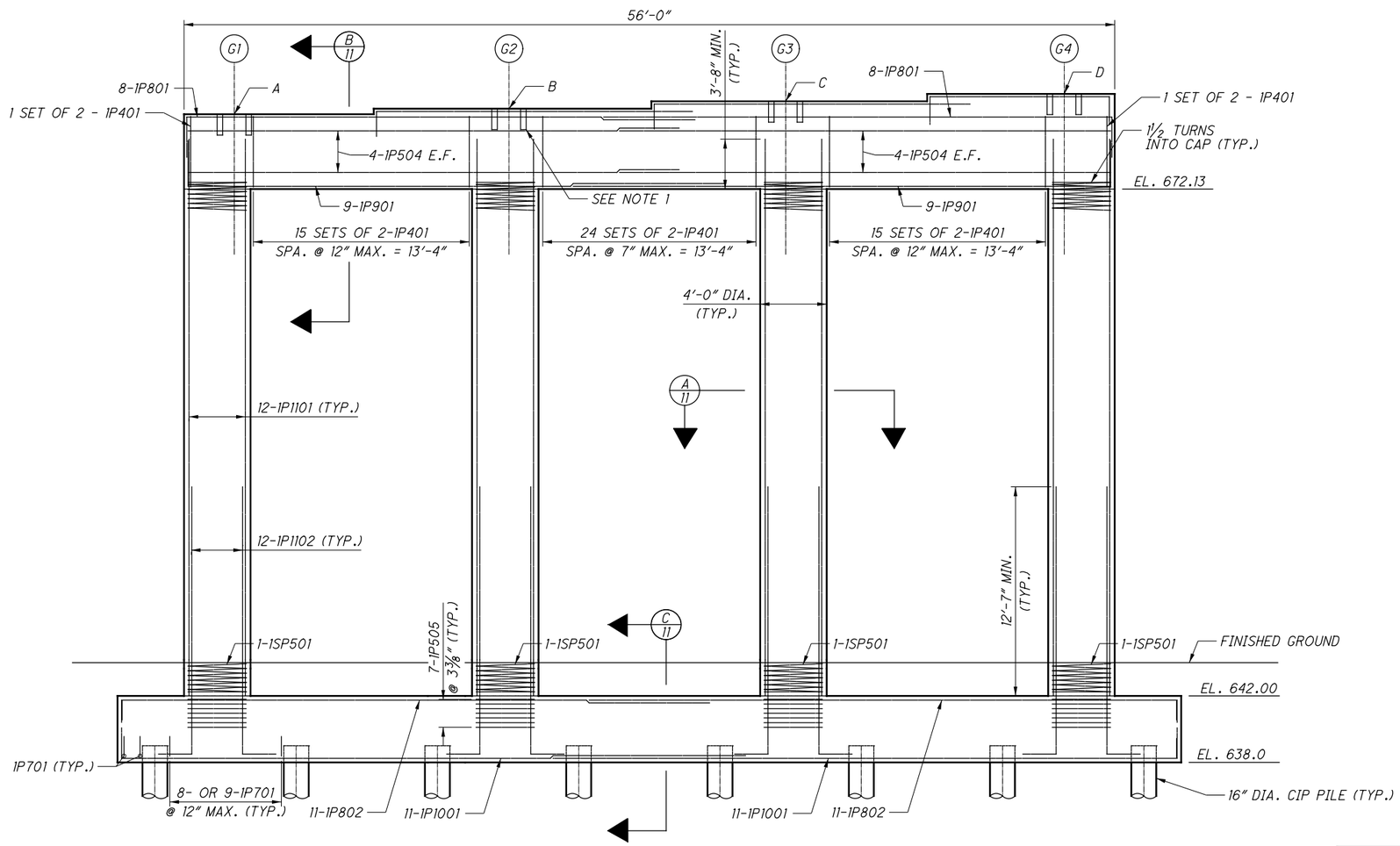

ELEVATION
(LOOKING UPSTATION)

MIN. SPLICE LENGTHS

BAR	LENGTH
4	2'-0"
5	3'-7"
8	7'-3"
9	9'-2"
10	11'-7"
11	14'-3"

PIER 1	
POINT	ELEVATIO
A	676.66
B	676.98
C	677.43
D	677.88

NOTES

1. FIELD CUT 1 #11 PIER COLUMN BAR TO PROVIDE 2" CLEAR COVER TO BOTTOM OF ANCHOR BOLT BLOCKOUT.

NO.	DATE	DESCRIPTION
0	2019-06-20	RFC

ISSUE RECORD

DESIGN AGENCY
Michael Baker INTERNATIONAL
1111 SUPERIOR AVE E., SUITE 2300, CLEVELAND, OH 44114

DESIGNED	DRAWN	REVIEWED	DATE
ABP	BTD	JWB	3/15/19
CHECKED	REVISED	STRUCTURE FILE NUMBER	
KAG		1801517	

RECORD PLANS

PIER 1 PLAN AND ELEVATION
CUY-010-1976L
OH-10 WESTBOUND OVER GCRTA BLUE AND GREEN LINES

RECORD PLANS

CUY-IR490/SR010-2.09/19.28
PID No. 96833

RECORD PLANS

10/46

65/110

BU-19 - GCRTA BLUE/GREEN BRIDGES & CATENARY MODIFICATIONS
...\Sheets\010_1976L_S1501.dgn 6/27/2019 5:02:13 PM Christopher.Lemley

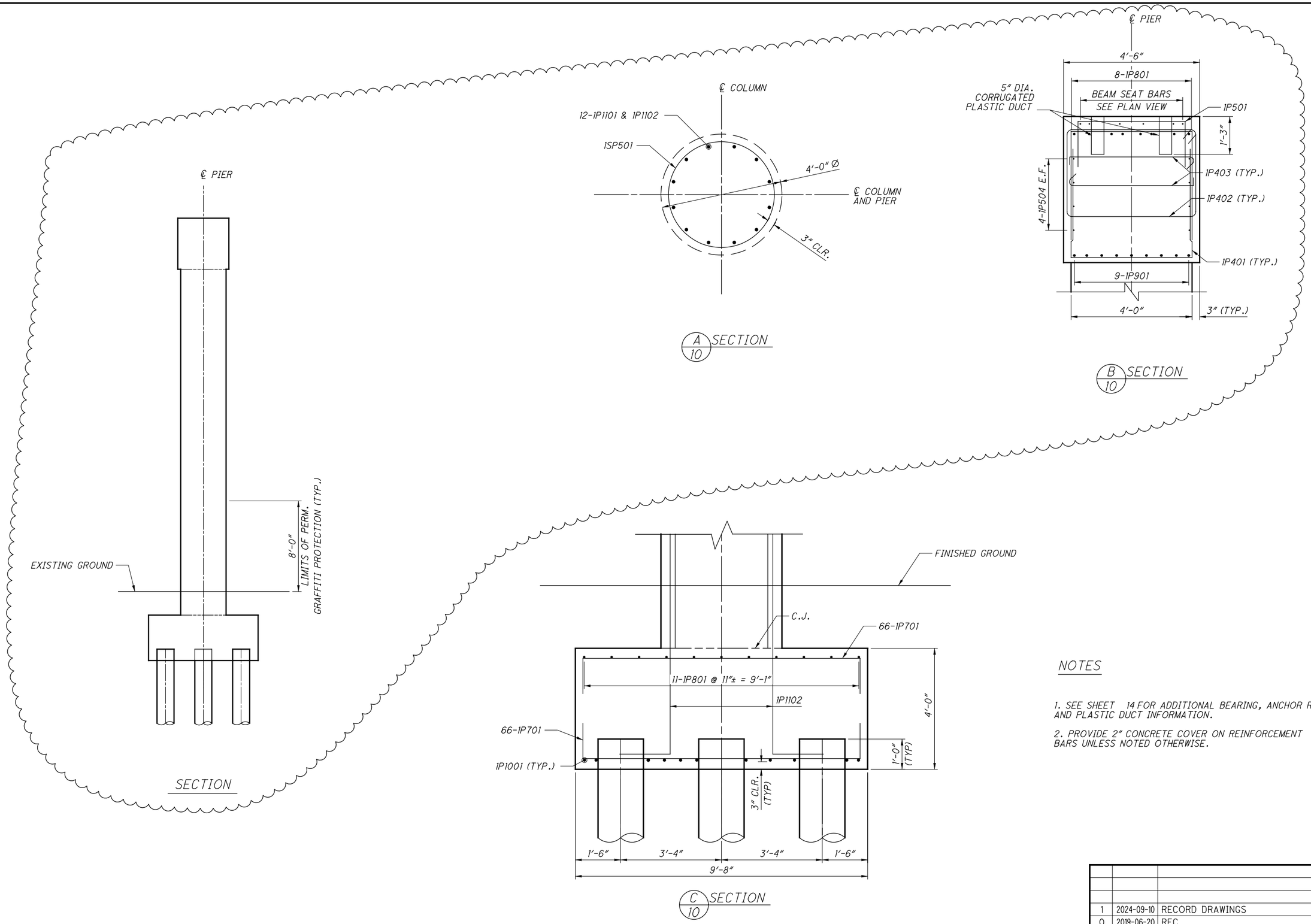

NOTES

1. SEE SHEET 14 FOR ADDITIONAL BEARING, ANCHOR ROD AND PLASTIC DUCT INFORMATION.

2. PROVIDE 2" CONCRETE COVER ON REINFORCEMENT BARS UNLESS NOTED OTHERWISE.

NO.	DATE	DESCRIPTION
1	2024-09-10	RECORD DRAWINGS
0	2019-06-20	RFC

ISSUE RECORD

DESIGN AGENCY
Michael Baker INTERNATIONAL
1111 SUPERIOR AVE E., SUITE 2300, CLEVELAND, OH 44114

DESIGNED	DRAWN	REVIEWED	DATE
ABP	BTD	JWB	3/15/19
CHECKED	REVISED	STRUCTURE FILE NUMBER	
KAG		1801517	

RECORD PLANS

PIER 1 SECTIONS
CUY-010-1976L
OH-10 WESTBOUND OVER GCRTA BLUE AND GREEN LINES

RECORD PLANS

CUY-IR490/SR010-2.09/19.28
PID No. 96833

RECORD PLANS

BU-19 - GCRTA BLUE/GREEN BRIDGES & CATENARY MODIFICATIONS
...\Sheets\010_1976L_SI503.dgn 9/19/2025 6:29:10 PM Gregory.Hertler

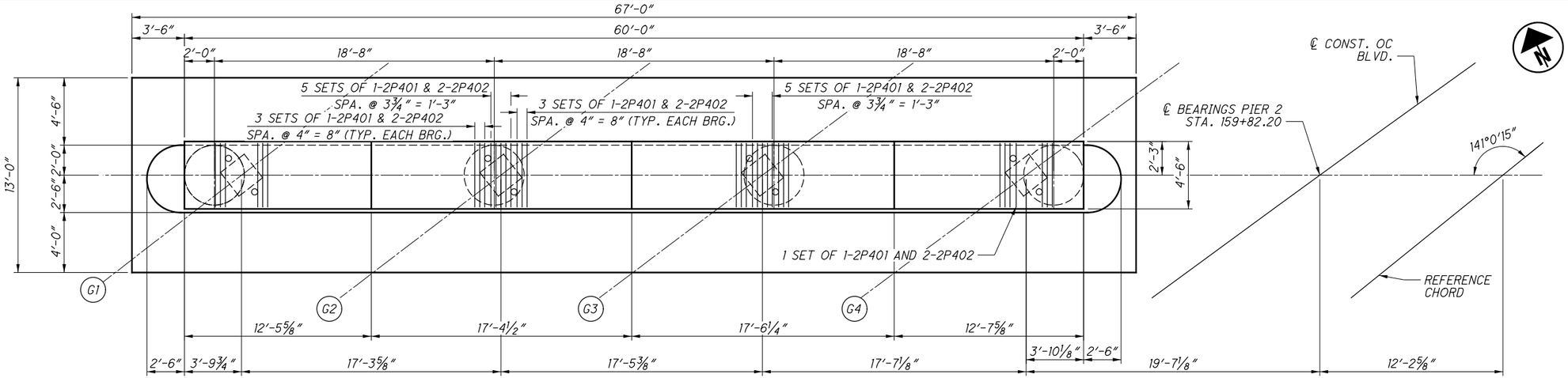

PLAN

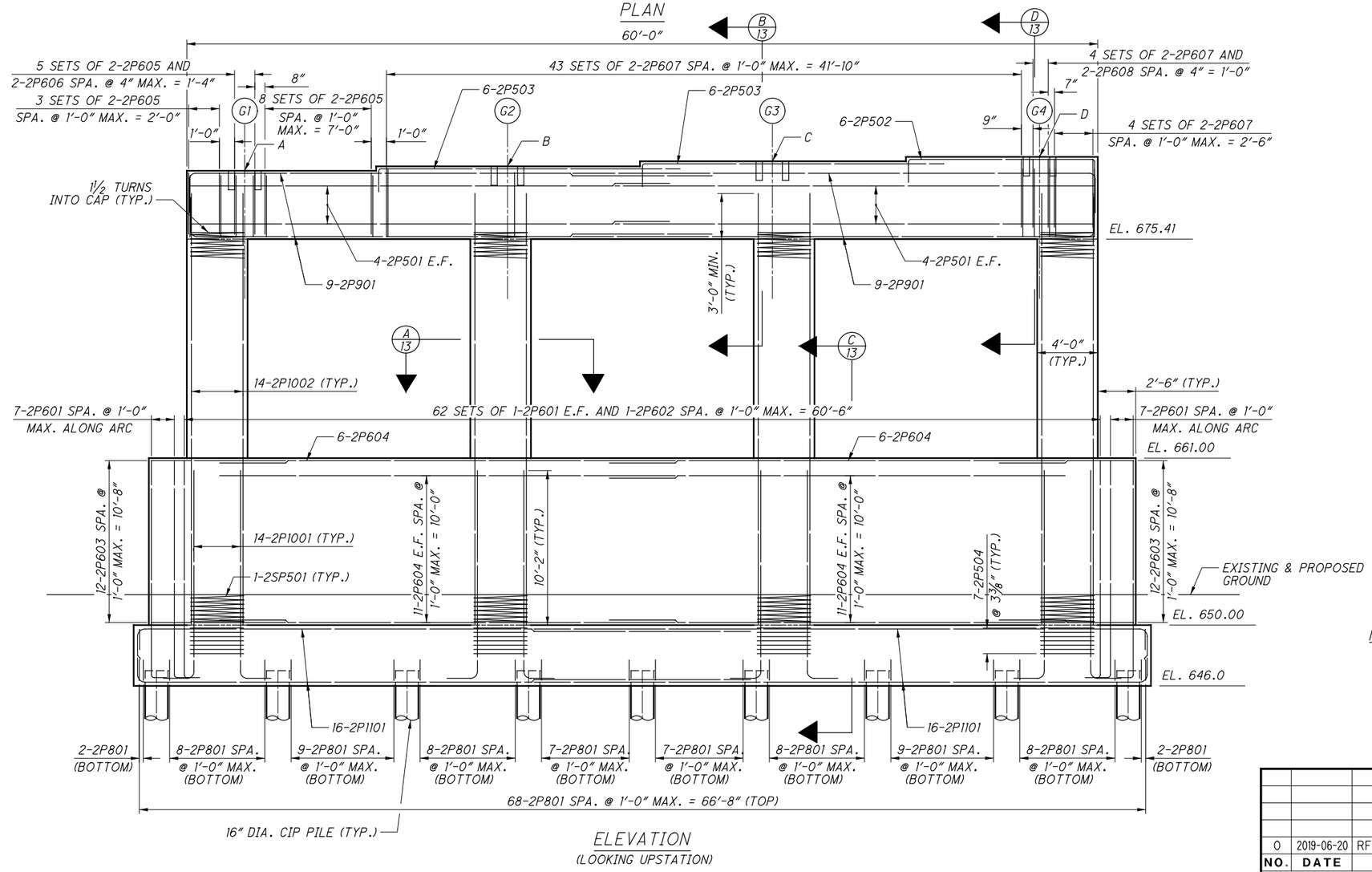

ELEVATION
(LOOKING UPSTATION)

PIER 2	
POINT	ELEVATION
A	679.94
B	680.19
C	680.52
D	680.81

MIN. SPLICE LENGTHS

BAR	LENGTH
5	3'-7"
6 HORIZ.	4'-4"
6 VERT.	3'-10"
9	9'-2"
11	14'-3"

NO.	DATE	DESCRIPTION
0	2019-06-20	RFC

ISSUE RECORD

DESIGN AGENCY
Michael Baker INTERNATIONAL
1111 SUPERIOR AVE E., SUITE 2300, CLEVELAND, OH 44114

DESIGNED	DRAWN	REVIEWED	DATE
ABP	BTD	JWB	3/15/19
CHECKED	REVISED	STRUCTURE FILE NUMBER	
KAG		1801517	

RECORD PLANS

PIER 2 PLAN AND ELEVATION
CUY-010-1976L
OH-10 WESTBOUND OVER GCRTA BLUE AND GREEN LINES

RECORD PLANS

CUY-IR490/SR010-2.09/19.28
PID No. 96833

RECORD PLANS

BU-19 - GCRTA BLUE/GREEN BRIDGES & CATENARY MODIFICATIONS
...\Sheets\010_1976L_S1502.dgn 6/27/2019 5:02:26 PM Christopher.Lemley

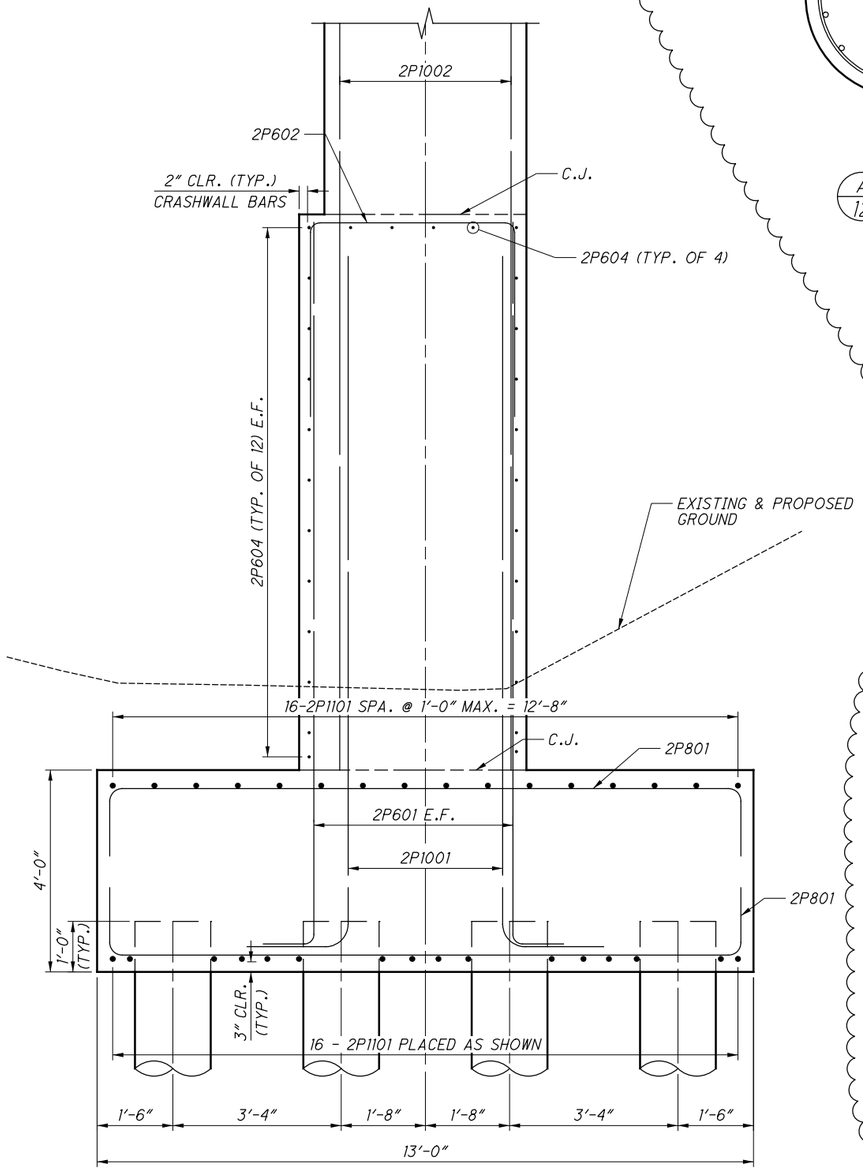

C/12 SECTION

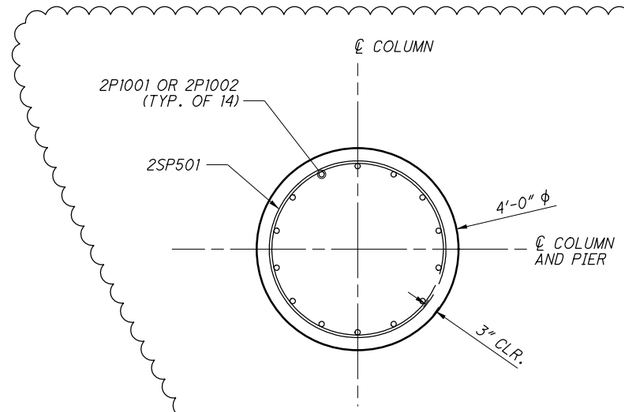

A/12 SECTION

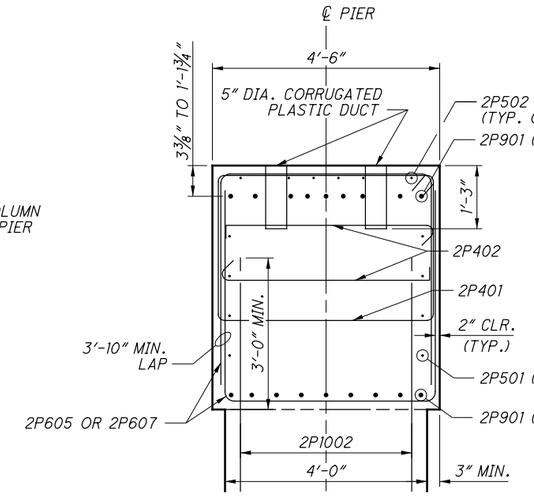

B/12 SECTION

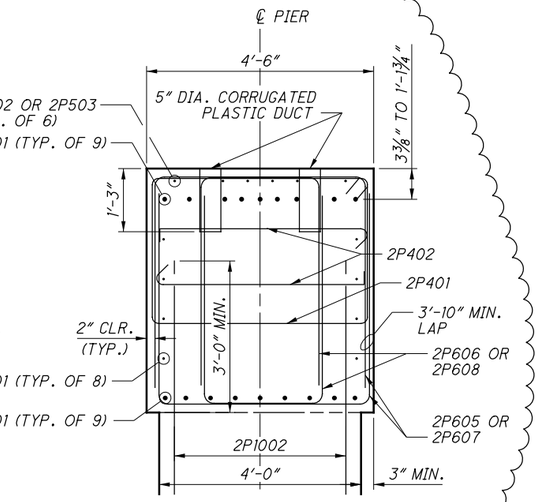

D/12 SECTION

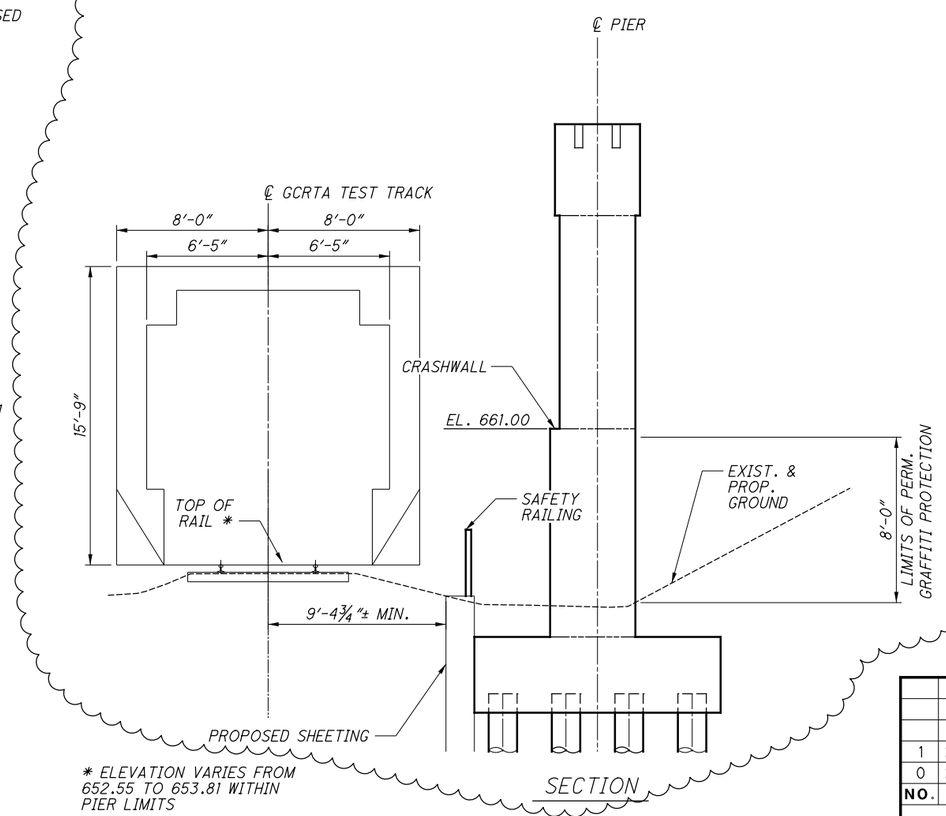

* ELEVATION VARIES FROM 652.55 TO 653.81 WITHIN PIER LIMITS

SECTION

NOTES

1. SEE SHEET 14 FOR ADDITIONAL BEARING, ANCHOR ROD AND PLASTIC DUCT INFORMATION.

2. PROVIDE 2" CONCRETE COVER ON REINFORCEMENT BARS UNLESS NOTED OTHERWISE.

NO.	DATE	DESCRIPTION
1	2024-09-10	RECORD DRAWINGS
0	2019-06-20	RFC

ISSUE RECORD

DESIGN AGENCY
Michael Baker INTERNATIONAL
1111 SUPERIOR AVE E., SUITE 2300, CLEVELAND, OH 44114

DESIGNED	DRAWN	REVIEWED	DATE
ABP	BTD	JWB	3/15/19
CHECKED	REVISED	STRUCTURE FILE NUMBER	
KAG	MKB	1801517	

RECORD PLANS

PIER 2 SECTIONS
CUY-010-1976L
OH-10 WESTBOUND OVER GCRTA BLUE AND GREEN LINES

RECORD PLANS

CUY-IR490/SR010-2.09/19.28
PID No. 96833

RECORD PLANS

BU-19 - GCRTA BLUE/GREEN BRIDGES & CATENARY MODIFICATIONS
...\Sheets\010_1976L_S1504.dgn 9/19/2025 6:29:22 PM Gregory.Hertler

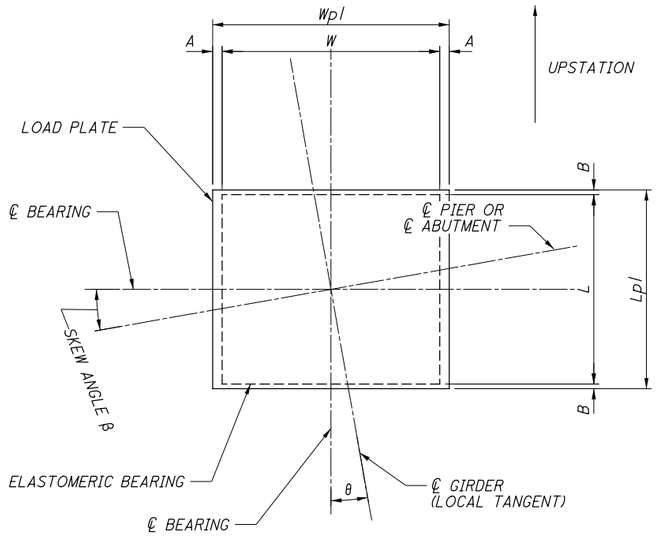

PLAN VIEW

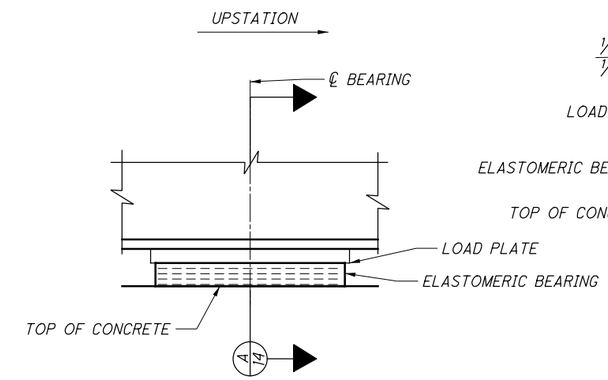

ELEVATION VIEW

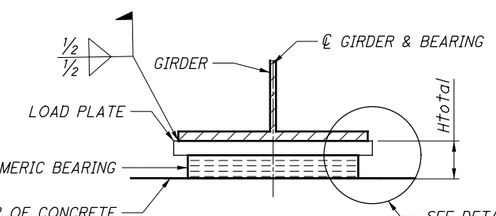

A 14 SECTION

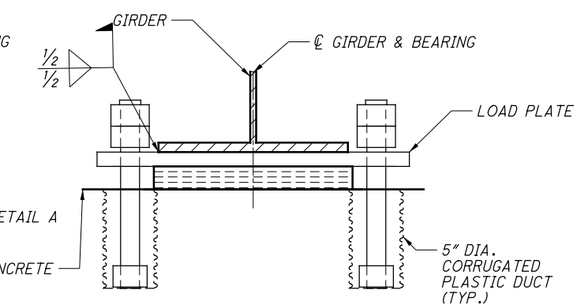

C 14 SECTION

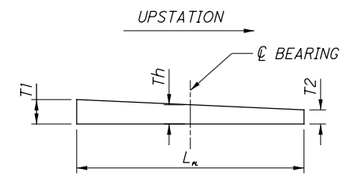

LOAD PLATE BEVEL

ALONG Lplate

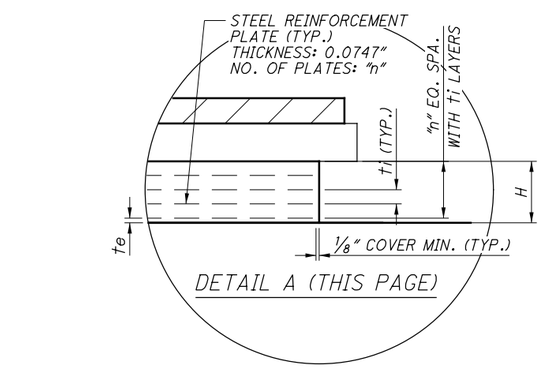

DETAIL A (THIS PAGE)

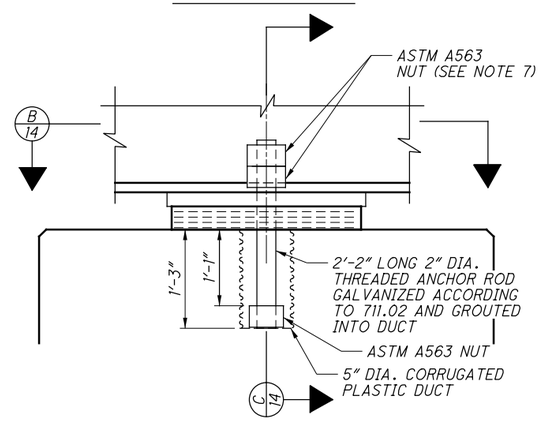

FIXED PIER DETAIL

BEARING DATA										
BEARING	BEARING LOCATION	W	L	A	B	te	ti	n	H	Htotal
ERA	REAR ABUTMENT	18"	18"	3"	1/2"	1/4"	1/2"	10	5.99"	7.49"
FP1	PIER 1	28"	23"	6 1/2"	1/2"	1/4"	5/8"	6	4.44"	5.94"
FP2	PIER 2	24"	24"	8 1/2"	1/2"	1/4"	5/8"	6	4.44"	5.94"
EFA	FORWARD ABUTMENT	16"	14"	4"	1/2"	1/4"	1/2"	5	3.12"	4.62"

LOAD PLATE DIMENSIONS					
BEARING LOCATION	T_1	T_2	T_h	W_{PL}	L_{PL}
REAR ABUTMENT	1 9/32"	1 23/32"	1 1/2"	2'-0"	1'-7"
PIER 1	1 7/32"	1 25/32"	1 1/2"	3'-5"	2'-0"
PIER 2	1 1/2"	1 1/2"	1 1/2"	3'-5"	2'-1"
FORWARD ABUTMENT	1 11/16"	1 5/16"	1 1/2"	2'-0"	1'-3"

BEARING DESIGN LOADS (KIPS)				
	R.A.	PIER 1	PIER 2	F.A.
DEAD LOAD	119	560	504	103
LIVE LOAD	110	227	206	108
TOTAL DESIGN LOAD	229	787	710	211

SKEW ANGLE β				
	R.A.	PIER 1	PIER 2	F.A.
BRG. 1 (43.08 LT)	33°27'15"	52°21'43"	52°05'17"	41°51'51"
BRG. 2 (32.58 LT)	33°27'15"	52°21'43"	52°05'17"	41°51'51"
BRG. 3 (22.08 LT)	33°27'15"	52°21'43"	52°05'17"	41°51'51"
BRG. 4 (11.58 LT)	33°27'15"	52°21'43"	52°05'17"	41°51'51"

GIRDER TO BEARING ANGLE θ				
	R.A.	PIER 1	PIER 2	F.A.
BRG. 1 (43.08 LT)	02°17'13"	01°57'52"	-00°22'57"	-01°32'45"
BRG. 2 (32.58 LT)	02°07'26"	01°38'16"	-00°44'05"	-01°48'04"
BRG. 3 (22.08 LT)	01°57'31"	01°18'20"	-01°05'36"	-02°03'37"
BRG. 4 (11.58 LT)	01°47'32"	00°58'03"	-01°27'29"	-02°19'22"

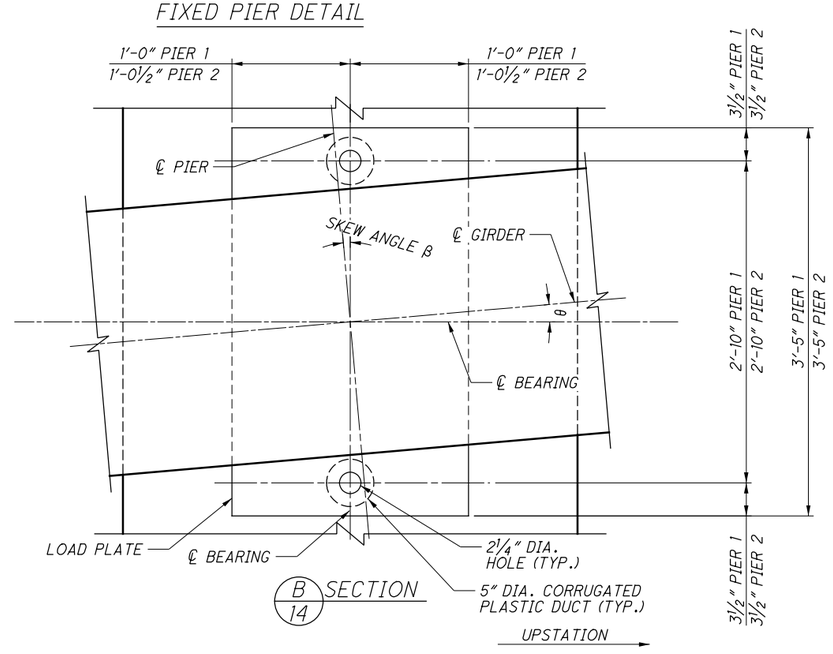

B 14 SECTION

NOTES:

1. THE ELASTOMER SHALL HAVE A HARDNESS OF 50 DUROMETER. THE BEARINGS WERE DESIGNED IN ACCORDANCE WITH SECTION 14.7.6 (METHOD A) OF THE AASHTO LRFD BRIDGE DESIGN SPECIFICATIONS. THE LONG-TERM COMPRESSION PROOF LOAD TEST (AASHTO STANDARD SPECIFICATIONS FOR HIGHWAY BRIDGES, DIVISION II, SECTION 18.7.2.6) IS NOT REQUIRED.
2. THE STEEL LOAD PLATE SHALL BE ASTM A709 GRADE 50 STEEL AND SHALL BE COATED IN ACCORDANCE WITH ITEMS 513 AND 514.
3. THE STEEL LOAD PLATE SHALL BE BONDED BY VULCANIZATION TO THE ELASTOMER DURING THE MOLDING PROCESS. CONTROL WELDING OF THE LOAD PLATE TO THE SUPERSTRUCTURE SO THAT THE PLATE TEMPERATURE AT THE ELASTOMER BONDED SURFACE DOES NOT EXCEED 300°F AS DETERMINED BY THE USE OF PYROMETRIC STICKS OR OTHER TEMPERATURE MONITORING DEVICES.
4. EACH BEARING ASSEMBLY SHALL BE SHOP MARKED WITH THE FOLLOWING INFORMATION: TOP, FORWARD STATION DIRECTION, LOCATION (REAR ABUTMENT, PIER 1, PIER 2 OR FORWARD ABUTMENT) AND BEAM NUMBER. ALL BEARINGS SHALL BE MARKED PRIOR TO SHIPPING. THE MARKS SHALL INCLUDE THE BEARING LOCATION ON THE BRIDGE, AND A DIRECTION ARROW THAT POINTS UP-STATION. ALL MARKS SHALL BE PERMANENT AND BE VISIBLE AFTER THE BEARING IS INSTALLED.
5. FURNISH AND INSTALL LAMINATED ELASTOMERIC BEARINGS PER ITEM 516 - ELASTOMERIC BEARING WITH INTERNAL LAMINATES AND LOAD PLATE.
6. ANCHOR RODS SHALL BE ASTM ASTM F1554, GRADE 105. NUTS SHALL CONFORM TO ASTM A563 FOR APPROPRIATE GRADE AND SIZE OF ANCHOR BOLT. WASHERS SHALL CONFORM TO ASTM F436.
7. INSTALL LOWER NUT IN CONTACT WITH TOP PLATE AND THEN BACK OFF ½ TURN. INSTALL UPPER NUT SNUG TIGHT TO PREVENT LOWER NUTS FROM LOOSENING.

NO.	DATE	DESCRIPTION
0	2019-06-20	RFC

ISSUE RECORD

DESIGN AGENCY
Michael Baker INTERNATIONAL
1111 SUPERIOR AVE E., SUITE 2300, CLEVELAND, OH 44114

DESIGNED	DRAWN	REVIEWED	DATE
GMC	GMC	JWB	3/15/19
CHECKED	REVISED	STRUCTURE FILE NUMBER	
KAG		1801517	

RECORD PLANS

ELASTOMERIC BEARING DETAILS
CUY-010-1976L
OH-10 WESTBOUND OVER GCRTA BLUE AND GREEN LINES

RECORD PLANS

CUY-IR490/SR010-2.09/19.28
PID No. 96833

RECORD PLANS

BU-19 - GCRTA BLUE/GREEN BRIDGES & CATENARY MODIFICATIONS
...\Sheets\010_1976L_SB501.dgn 6/27/2019 5:02:37 PM Christopher.Lemley

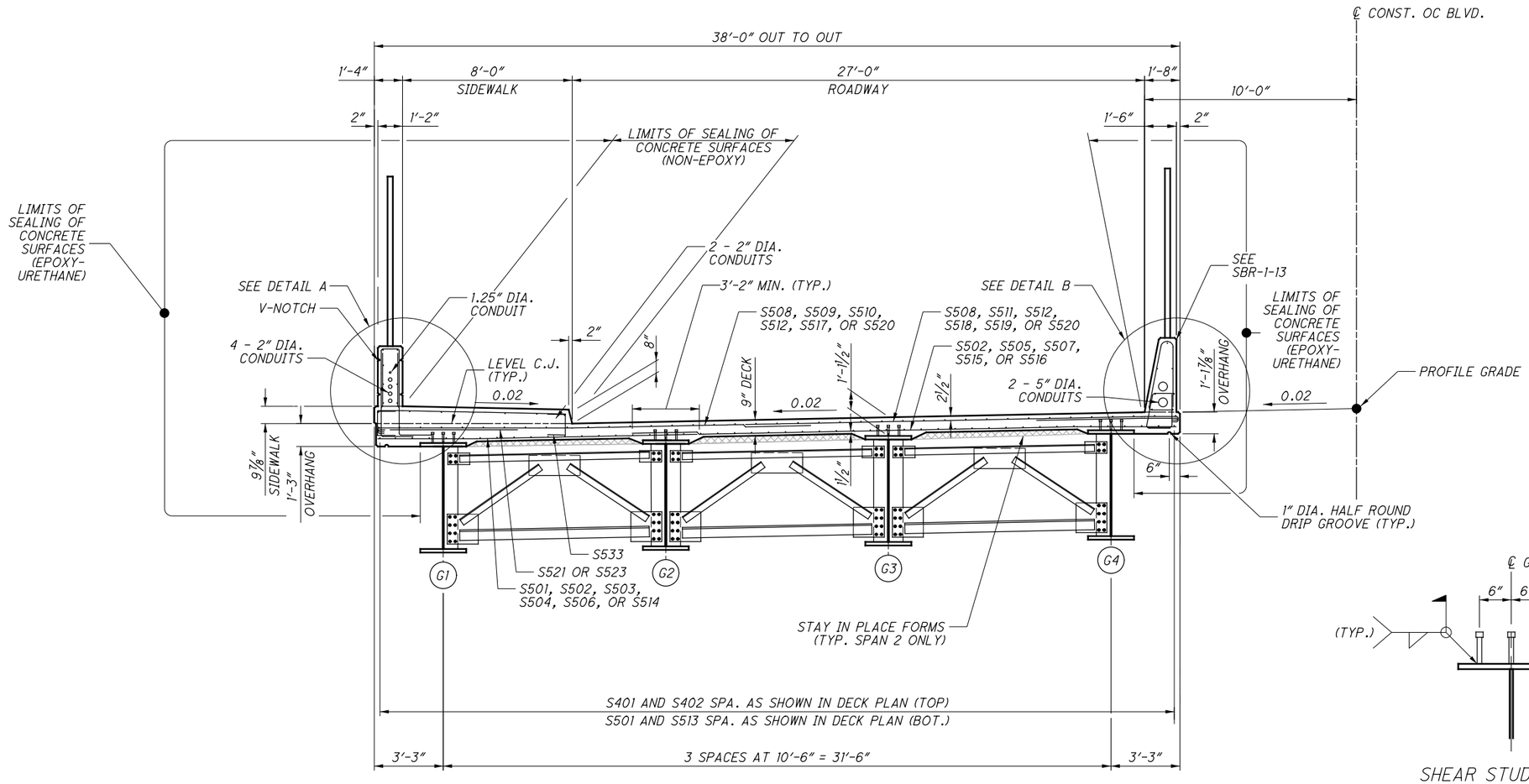

TRANSVERSE SECTION

(LOOKING UPSTATION)

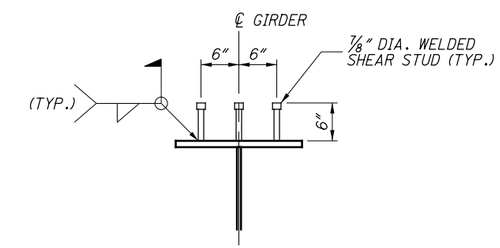

SHEAR STUD DETAIL

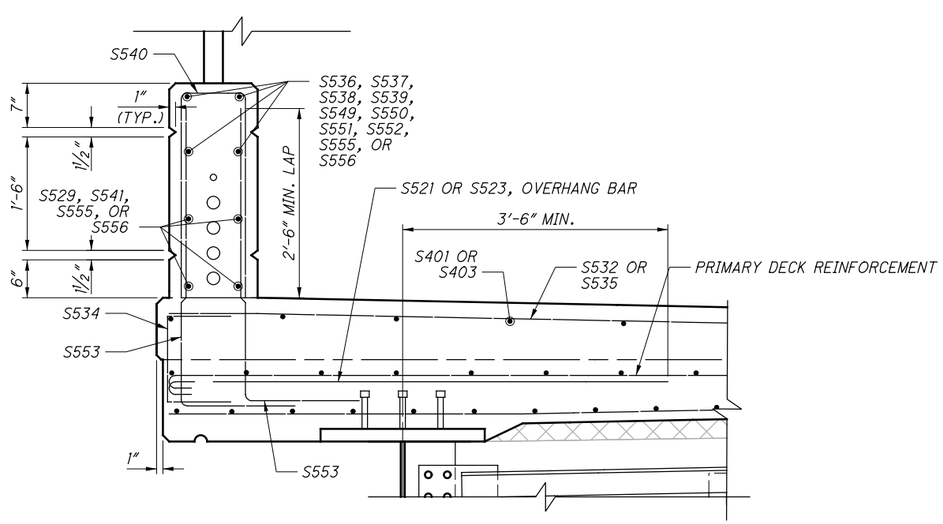

DETAIL A

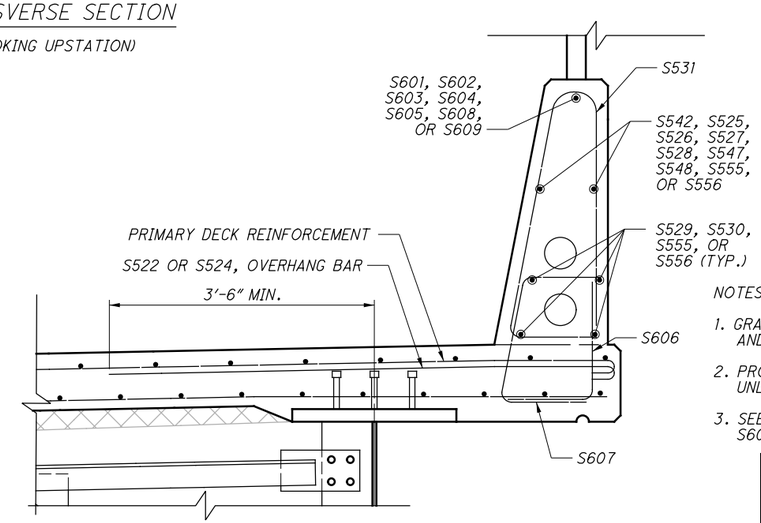

DETAIL B

NOTES:

1. GRAFFITI PROTECTION SHALL BE APPLIED TO PARAPETS AND AESTHETIC PYLONS.
2. PROVIDE 2" CONCRETE COVER ON REINFORCEMENT BARS UNLESS NOTED OTHERWISE.
3. SEE ABUTMENT DETAILS FOR LOCATION OF S555, S556, S608, AND S609 BARS.

NO.	DATE	DESCRIPTION
2	2021-05-18	DC056
1	2019-05-17	DC006, DRFI005
0	2019-03-13	RFC

ISSUE RECORD

DESIGN AGENCY
Michael Baker INTERNATIONAL
1111 SUPERIOR AVE E., SUITE 2300, CLEVELAND, OH 44114

DESIGNED	DRAWN	REVIEWED	DATE
KAG	KAG	JWB	3/01/19
CHECKED	REVISED	STRUCTURE FILE NUMBER	
EKW		1801517	

RECORD PLANS

TRANSVERSE SECTION
CUY-010-1976L
OH-10 WESTBOUND OVER GCRTA BLUE AND GREEN LINES

RECORD PLANS

CUY-IR490/SR010-2.09/19.28
PID No. 96833

RECORD PLANS

BU-19 - GCRTA BLUE/GREEN BRIDGES & CATENARY MODIFICATIONS
...\Sheets\010_1976L_ST501.dgn 5/19/2021 8:19:20 PM Gregory Hertler

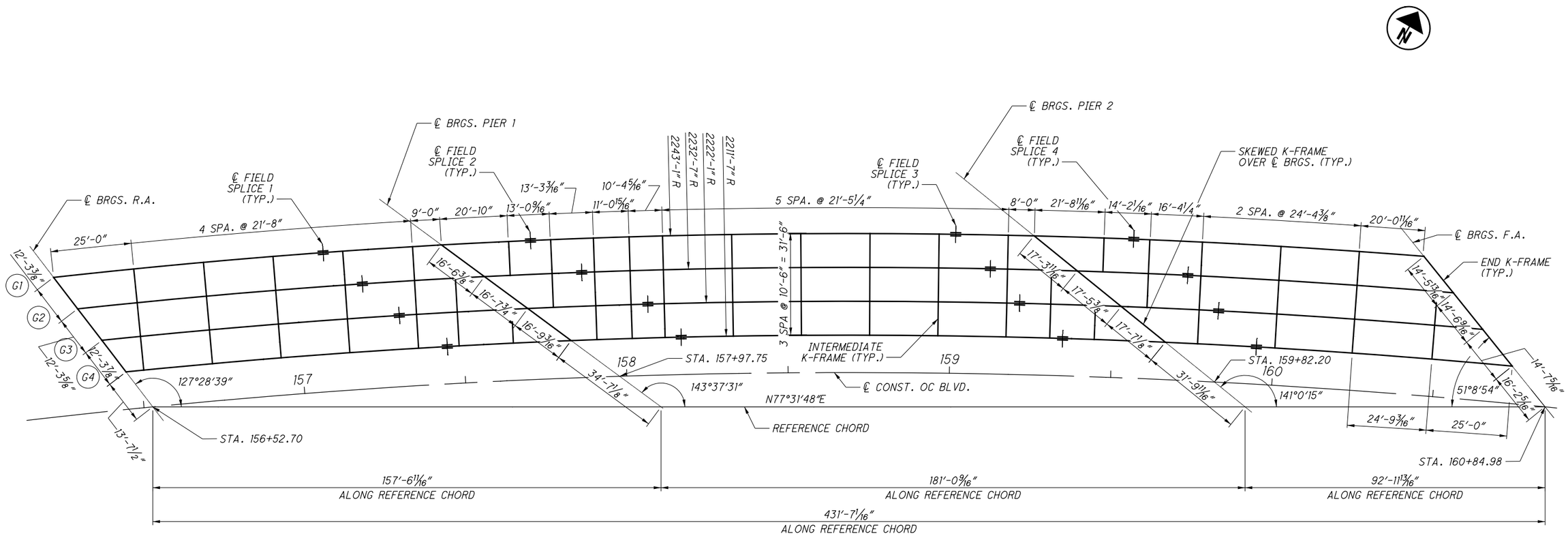

FRAMING PLAN

	INTERMEDIATE K-FRAME BRACING LOCATIONS (MEASURED FROM ℄ BRGS. R.A.)															
	1	2	3	4	5	6	7	8	9	10	11	12	13	14	15	16
G1	25'-0"	46'-8"	68'-4 1/16"	90'-0 1/16"	111'-8 1/16"	141'-6 1/16"	154'-6 5/8"	167'-9 13/16"	178'-10 3/4"	189'-3 1/16"	210'-8 5/16"	232'-1 9/16"	253'-6 7/8"	275'-0 1/8"	296'-5 3/8"	326'-2 1/16"
G2 L	18'-6 5/16"	40'-1 1/8"	61'-7 15/16"	83'-2 3/4"	104'-9 9/16"	134'-5 7/8"	147'-5 11/16"	160'-8 1/16"	171'-9"	181'-11 15/16"	203'-4 3/16"	224'-8 1/4"	246'-0 5/16"	267'-4 3/8"	288'-8 7/16"	318'-3 1/2"
G2 R	18'-6 5/16"	40'-1 1/8"	61'-7 15/16"	83'-2 3/4"	104'-9 9/16"	117'-5 7/8"	147'-5 11/16"	160'-8 1/16"	171'-9"	181'-11 15/16"	203'-4 3/16"	224'-8 1/4"	246'-0 5/16"	267'-4 3/8"	288'-8 7/16"	302'-4 11/16"
G3 L	12'-0 1/2"	33'-6 1/8"	54'-11 11/16"	76'-5 1/4"	97'-10 7/8"	110'-6 7/16"	140'-4 9/16"	153'-6 1/4"	164'-7 3/16"	174'-8 11/16"	195'-11 15/16"	217'-2 13/16"	238'-5 11/16"	259'-8 9/16"	280'-11 3/8"	294'-6 7/8"
G3 R	12'-0 1/2"	33'-6 1/8"	54'-11 11/16"	76'-5 1/4"	97'-10 7/8"	110'-6 7/16"	127'-5 3/8"	153'-6 1/4"	164'-7 3/16"	174'-8 11/16"	195'-11 15/16"	217'-2 13/16"	238'-5 11/16"	259'-8 9/16"	280'-11 3/8"	294'-6 7/8"
G4	5'-6 9/16"	26'-10 15/16"	48'-3 5/16"	69'-7 11/16"	91'-0 1/16"	103'-6 15/16"	120'-5 1/8"	146'-4 5/16"	157'-5 3/16"	167'-5 5/16"	188'-7 9/16"	209'-9 1/4"	230'-10 7/8"	252'-0 9/16"	273'-2 3/16"	286'-8 7/8"

	17	18	19	20	21
G1	340'-4 1/8"	356'-8 3/8"	381'-0 13/16"	405'-5 3/16"	-
G2 L	332'-4 3/4"	348'-8 1/16"	372'-11 1/8"	397'-2 1/8"	-
G2 R	332'-4 3/4"	348'-8 1/16"	372'-11 1/8"	397'-2 1/8"	422'-2 1/8"
G3 L	324'-5 1/4"	340'-7 5/8"	364'-9 5/16"	388'-10 15/16"	413'-9 9/16"
G3 R	308'-5 1/4"	340'-7 5/8"	364'-9 5/16"	388'-10 15/16"	413'-9 9/16"
G4	300'-6 1/2"	332'-7 1/16"	356'-7 5/16"	380'-7 5/8"	405'-4 13/16"

NOTES:

1. SEE GIRDER ELEVATION SHEET FOR ADDITIONAL INFORMATION

NO.	DATE	DESCRIPTION
1	2019-05-17	DC006, DRFI005
0	2019-03-13	RFC

ISSUE RECORD

DESIGN AGENCY
Michael Baker INTERNATIONAL
1111 SUPERIOR AVE E., SUITE 2300, CLEVELAND, OH 44114

DESIGNED	DRAWN	REVIEWED	DATE
ETB	ETB	JWB	3/01/19
CHECKED	REVISED	STRUCTURE FILE NUMBER	
JCC		1801517	

RECORD PLANS

FRAMING PLAN
CUY-010-1976L
OH-10 WESTBOUND OVER GCRTA BLUE AND GREEN LINES

RECORD PLANS

CUY-IR490/SR010-2.09/19.28
PID No. 96833

RECORD PLANS

BU-19 - GCRTA BLUE/GREEN BRIDGES & CATENARY MODIFICATIONS
...\Sheets\010_1976L_SD501.dgn 6/27/2019 5:02:51 PM Christopher.Lemley

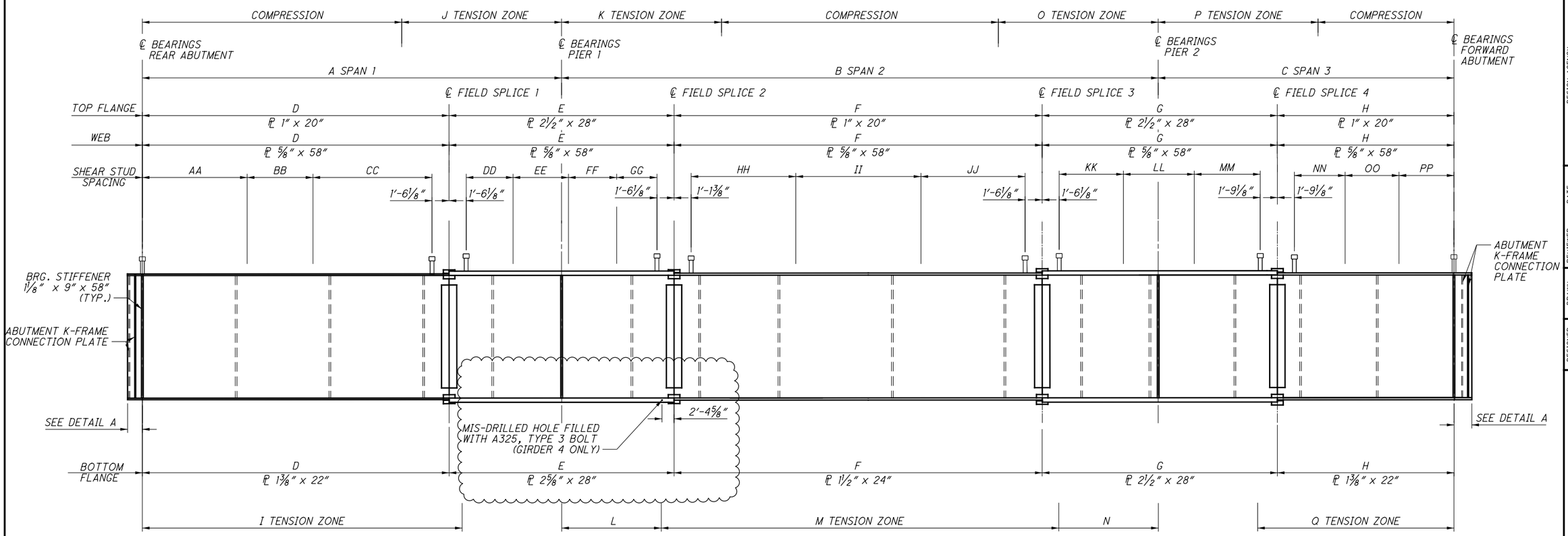

SHEAR STUD SPACING TABLE (MEASURED ALONG CENTERLINE GIRDER)

GIRDER	AA	BB	CC	DD	EE	FF	GG	HH	II	JJ
G1	5 SPA. @ 11"	1 SPA. @ 10 3/4"	71 SPA. @ 1'-1"	11 SPA. @ 1'-3"	24 SPA. @ 11"	1 SPA. @ 1'-1 9/16"	21 SPA. @ 1'-2"	55 SPA. @ 1'-2"	1 SPA. @ 6 1/8"	55 SPA. @ 1'-2"
G2	68 SPA. @ 9"	1 SPA. @ 4 1/8"	33 SPA. @ 1'-1"	39 SPA. @ 1'-1"	NOT USED	1 SPA. @ 3 5/8"	18 SPA. @ 1'-3"	41 SPA. @ 1'-2"	1 SPA. @ 1'-2 3/8"	64 SPA. @ 1'-2"
G3	64 SPA. @ 11"	1 SPA. @ 11 7/16"	29 SPA. @ 1'-1"	38 SPA. @ 1'-1"	NOT USED	1 SPA. @ 5 5/16"	26 SPA. @ 1'-3"	48 SPA. @ 1'-2"	1 SPA. @ 3"	48 SPA. @ 1'-2"
G4	53 SPA. @ 11"	1 SPA. @ 1'-0 3/4"	45 SPA. @ 1'-1"	25 SPA. @ 1'-3"	26 SPA. @ 11"	1 SPA. @ 4 9/16"	13 SPA. @ 1'-1"	53 SPA. @ 1'-1"	1 SPA. @ 4 15/16"	53 SPA. @ 1'-1"

SHEAR STUD SPACING TABLE (MEASURED ALONG CENTERLINE GIRDER)

GIRDER	KK	LL	MM	NN	OO	PP
G1	27 SPA. @ 11"	1 SPA. @ 4 1/8"	23 SPA. @ 1'-2"	37 SPA. @ 1'-2"	1 SPA. @ 11 1/4"	59 SPA. @ 9"
G2	16 SPA. @ 1'-3"	1 SPA. @ 11 9/16"	37 SPA. @ 1'-0"	26 SPA. @ 1'-0"	1 SPA. @ 8 1/2"	72 SPA. @ 9"
G3	19 SPA. @ 1'-3"	1 SPA. @ 8 5/8"	34 SPA. @ 1'-0"	31 SPA. @ 1'-0"	1 SPA. @ 7 3/8"	73 SPA. @ 8"
G4	20 SPA. @ 1'-3"	1 SPA. @ 10 1/4"	31 SPA. @ 1'-0"	23 SPA. @ 1'-1"	1 SPA. @ 7 1/4"	57 SPA. @ 11"

ABUTMENT K-FRAME CONNECTION PLATE

	R.A.		F.A.	
GIRDER	R	S	R	S
G1	8"	6⅞"	8"	10¾"
G2	8"	6⅞"	8"	10¾"
G3	8"	6 15/16"	8"	10 15/16"
G4	8"	7"	8"	11"

GIRDER DIMENSION TABLE (MEASURED ALONG CENTERLINE OF GIRDER)

GIRDER	A	B	C	D	E	F	G	H
G1	120'-8 1/16"	183'-9 5/16"	121'-0 7/16"	83'-10⅞"	64'-4 13/16"	131'-10 7/16"	55'-2⅜"	90'-1⅜"
G2	126'-5⅞"	183'-10 13/16"	116'-8 7/16"	88'-7¼"	68'-0⅞"	126'-8⅝"	61'-2 13/16"	82'-5⅝"
G3	132'-4 9/16"	184'-0 11/16"	112'-3½"	92'-6 9/16"	77'-1 9/16"	115'-3¼"	61'-8⅞"	82'-0½"
G4	138'-4 5/16"	184'-2¾"	107'-9¾"	99'-10⅞"	72'-6 13/16"	118'-3 3/16"	61'-1½"	78'-6 7/16"

TENSION ZONE TABLE (MEASURED ALONG CENTERLINE OF GIRDER)

GIRDER	I	J	K	L	M	N	O	P	Q
G1	91'-0"	77'-0"	56'-0"	30'-0"	126'-0"	27'-0"	50'-0"	83'-0"	86'-0"
G2	96'-0"	77'-0"	52'-0"	26'-0"	129'-0"	28'-0"	51'-0"	82'-0"	87'-0"
G3	101'-0"	78'-0"	54'-0"	29'-0"	128'-0"	27'-0"	49'-0"	83'-0"	85'-0"
G4	103'-0"	78'-0"	56'-0"	29'-0"	126'-0"	29'-0"	54'-0"	77'-0"	82'-0"

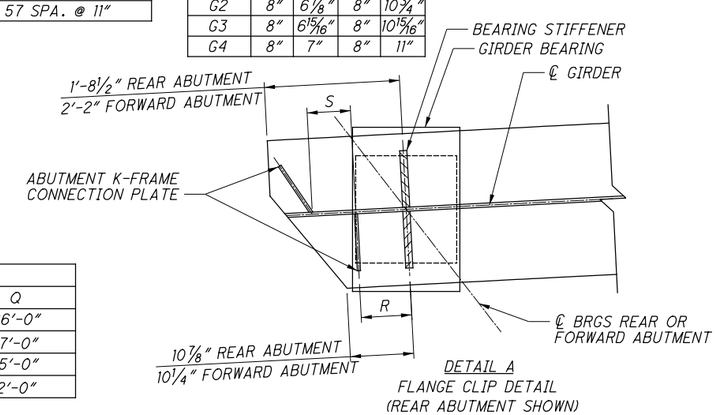

NOTES :

1. SEE FRAMING PLAN SHEET FOR ADDITIONAL INFORMATION

2. ALL SPLICE MATERIAL IS ASTM A709 GRADE (50W) UNLESS NOTED OTHERWISE.

3. ALL FLANGE, WEB, AND FIELD SPLICE PLATES SHALL BE DESIGNATED "CVN". WHERE A SHAPE OR PLATE IS DESIGNATED (CVN), FURNISH MATERIAL THAT MEETS THE MINIMUM NOTCH TOUGHNESS REQUIREMENTS AS SPECIFIED IN 711.01.

4. WELD ATTACHMENT OF SUPPORTS FOR CONCRETE DECK FINISHING MACHINE TO AREAS OF THE FASCIA STRINGER DESIGNATED "COMPRESSION". DO NOT WELD ATTACHMENTS TO AREAS DESIGNATED "TENSION". FILLET WELDS TO COMPRESSION FLANGES SHALL BE AT LEAST 1" FROM EDGE OF FLANGE, BE NO MORE THAN 2" LONG, AND BE AT LEAST 1/4" FOR THICKNESSES UP TO 3/4" OR 5/16" FOR GREATER THAN 3/4" THICK.

NO.	DATE	DESCRIPTION
1	2024-09-10	RECORD DRAWINGS
0	2019-03-13	RFC

ISSUE RECORD

DESIGN AGENCY
Michael Baker INTERNATIONAL
1111 SUPERIOR AVE E., SUITE 2300, CLEVELAND, OH 44114

DESIGNED	DRAWN	REVIEWED	DATE
ETB	ETB	JWB	3/01/19
CHECKED	REVISED	STRUCTURE FILE NUMBER	
JCC		1801517	

RECORD PLANS

GIRDER ELEVATION
CUY-010-1976L
OH-10 WESTBOUND OVER GCRTA BLUE AND GREEN LINES

RECORD PLANS

CUY-IR490/SR010-2.09/19.28
PID No. 96833

RECORD PLANS

BU-19 - GCRTA BLUE/GREEN BRIDGES & CATENARY MODIFICATIONS
...\Sheets\010_1976L_SD502.dgn 11/21/2024 4:47:00 PM Rohit.Bk

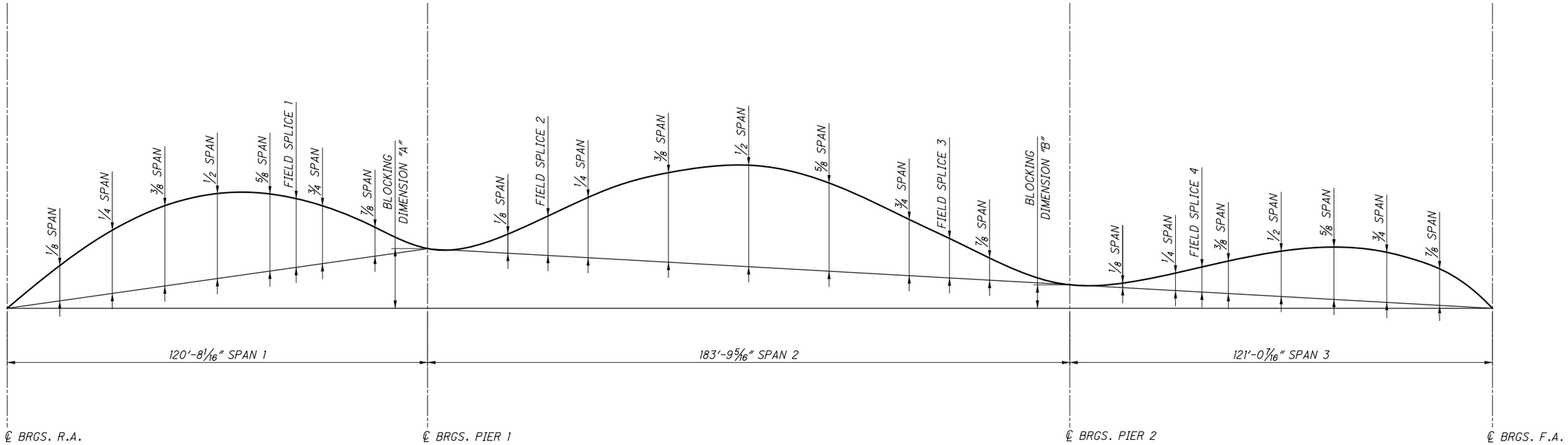

BLOCKING DIMENSIONS	
DIM. "A"	DIM. "B"
7 1/2 "	18 1/8 "

DEFLECTION AND CAMBER (INCHES) - GIRDER 1

SPAN 1

CAMBER DESCRIPTION	℄ BRGS R.A.	1/8 SPAN	1/4 SPAN	3/8 SPAN	1/2 SPAN	5/8 SPAN	FIELD SPLICE 1	3/4 SPAN	7/8 SPAN	℄ BRGS PIER 1
DEFLECTION DUE TO WEIGHT OF STEEL	0	1/8	3/16	1/4	3/16	1/8	1/16	0	0	0
DEFLECTION DUE TO REMAINING DEAD LOAD	0	9/16	15/16	1	3/4	3/8	1/8	0	-3/16	0
GEOMETRIC CORRECTION	0	0	0	0	0	0	0	0	0	0
REQUIRED SHOP CAMBER	0	11/16	1 3/16	1 1/4	15/16	7/16	3/16	0	-3/16	0

DEFLECTION AND CAMBER (INCHES) - GIRDER 1

SPAN 2

CAMBER DESCRIPTION	℄ BRGS PIER 1	1/8 SPAN	FIELD SPLICE 2	1/4 SPAN	3/8 SPAN	1/2 SPAN	5/8 SPAN	3/4 SPAN	FIELD SPLICE 3	7/8 SPAN	℄ BRGS PIER 2
DEFLECTION DUE TO WEIGHT OF STEEL	0	1/4	5/16	5/8	1	1 3/16	1 1/16	3/4	5/16	5/16	0
DEFLECTION DUE TO REMAINING DEAD LOAD	0	1 7/16	1 13/16	3 1/2	5 7/16	6 3/8	5 13/16	4	1 7/8	1 3/4	0
GEOMETRIC CORRECTION	0	1/8	1/8	3/16	5/16	3/8	1/2	5/8	11/16	11/16	0
REQUIRED SHOP CAMBER	0	1 13/16	2 1/4	4 3/8	6 3/4	7 15/16	7 3/8	5 5/16	2 7/8	2 3/4	0

DEFLECTION AND CAMBER (INCHES) - GIRDER 1

SPAN 3

CAMBER DESCRIPTION	℄ BRGS PIER 2	1/8 SPAN	1/4 SPAN	FIELD SPLICE 4	3/8 SPAN	1/2 SPAN	5/8 SPAN	3/4 SPAN	7/8 SPAN	℄ BRGS F.A.
DEFLECTION DUE TO WEIGHT OF STEEL	0	-1/16	-1/16	0	0	1/8	1/8	1/8	1/8	0
DEFLECTION DUE TO REMAINING DEAD LOAD	0	-5/16	-5/16	-5/16	-1/16	3/8	11/16	11/16	7/16	0
GEOMETRIC CORRECTION	0	2	3 3/8	3 7/16	4 1/4	4 1/2	4 1/4	3 3/8	2	0
REQUIRED SHOP CAMBER	0	1 5/8	3	3 1/16	4 3/16	5	5 1/16	4 1/4	2 1/2	0

NOTES:

1. SEE SHEET 17/46 FOR GIRDER ELEVATIONS
2. GEOMETRIC CORRECTION SHOWN IS ADJUSTMENT DUE TO VERTICAL CURVE
3. HEAT CURVING IS NOT PERMITTED.

NO.	DATE	DESCRIPTION
0	2019-03-13	RFC

ISSUE RECORD

BU-19 - GCRTA BLUE/GREEN BRIDGES & CATENARY MODIFICATIONS
...\Sheets\010_1976L_SS501.dgn 6/27/2019 5:03:05 PM Christopher.Lemley

DESIGN AGENCY
Michael Baker INTERNATIONAL
1111 SUPERIOR AVE E., SUITE 2300, CLEVELAND, OH 44114

DESIGNED	DRAWN	REVIEWED	DATE
ETB	EKW	JWB	3/01/19
CHECKED	REVISED	STRUCTURE FILE NUMBER	
MKB		1801517	

RECORD PLANS

DEFLECTION AND CAMBER TABLE (1 OF 4)
CUY-010-1976L
OH-10 WESTBOUND OVER GCRTA BLUE AND GREEN LINES

RECORD PLANS

CUY-IR490/SR010-2.09/19.28
PID No. 96833

RECORD PLANS

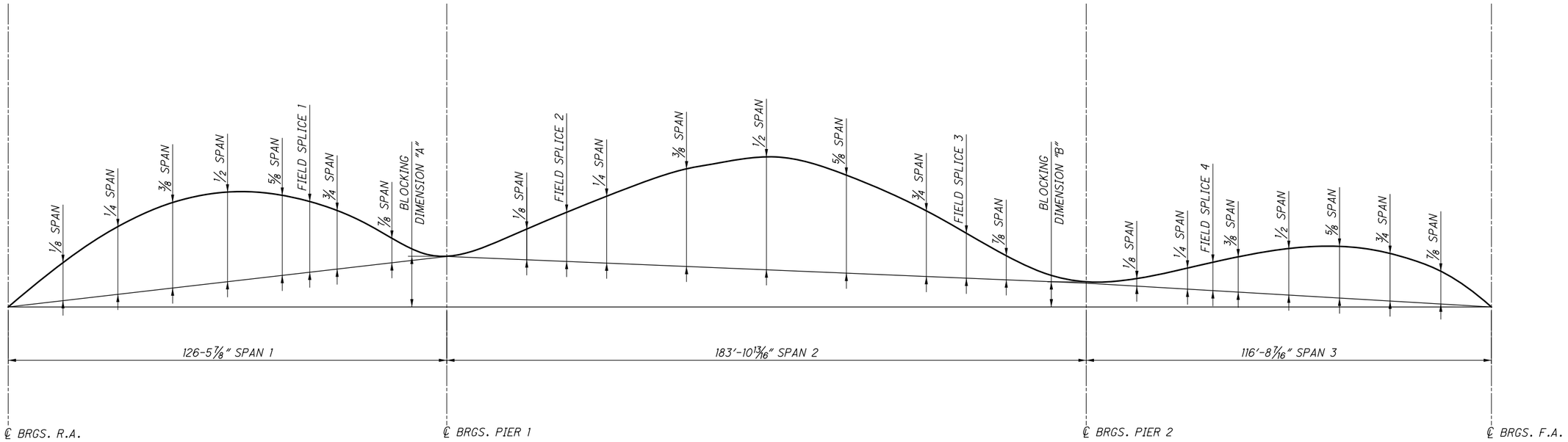

BLOCKING DIMENSIONS	
DIM. "A"	DIM. "B"
8 15/16''	20"

DEFLECTION AND CAMBER (INCHES) - GIRDER 2										
SPAN 1										
CAMBER DESCRIPTION	℄ BRGS R.A.	1/8 SPAN	1/4 SPAN	3/8 SPAN	1/2 SPAN	5/8 SPAN	FIELD SPLICE 1	3/4 SPAN	7/8 SPAN	℄ BRGS PIER 1
DEFLECTION DUE TO WEIGHT OF STEEL	0	1/8	1/4	5/16	1/4	3/16	1/8	1/16	0	0
DEFLECTION DUE TO REMAINING DEAD LOAD	0	9/16	15/16	1	3/4	3/8	1/8	0	-3/16	0
GEOMETRIC CORRECTION	0	0	0	0	0	0	0	0	0	0
REQUIRED SHOP CAMBER	0	3/4	1 3/16	1 5/16	1	1/2	3/16	1/16	-3/16	0

DEFLECTION AND CAMBER (INCHES) - GIRDER 2											
SPAN 2											
CAMBER DESCRIPTION	℄ BRGS PIER 1	1/8 SPAN	FIELD SPLICE 2	1/4 SPAN	3/8 SPAN	1/2 SPAN	5/8 SPAN	3/4 SPAN	FIELD SPLICE 3	7/8 SPAN	℄ BRGS PIER 2
DEFLECTION DUE TO WEIGHT OF STEEL	0	1/4	3/8	5/8	15/16	1 1/8	1	11/16	3/8	5/16	0
DEFLECTION DUE TO REMAINING DEAD LOAD	0	1 3/8	1 15/16	3 1/4	4 7/8	5 9/16	4 15/16	3 5/16	1 3/4	1 7/16	0
GEOMETRIC CORRECTION	0	1/4	5/16	1/2	11/16	15/16	1 3/16	1 7/16	1 7/16	1 3/8	0
REQUIRED SHOP CAMBER	0	1 7/8	2 5/8	4 3/8	6 9/16	7 9/16	7 1/8	5 7/16	3 9/16	3 1/16	0

DEFLECTION AND CAMBER (INCHES) - GIRDER 2										
SPAN 3										
CAMBER DESCRIPTION	℄ BRGS PIER 2	1/8 SPAN	1/4 SPAN	FIELD SPLICE 4	3/8 SPAN	1/2 SPAN	5/8 SPAN	3/4 SPAN	7/8 SPAN	℄ BRGS F.A.
DEFLECTION DUE TO WEIGHT OF STEEL	0	-1/16	0	0	0	1/16	1/8	1/8	1/16	0
DEFLECTION DUE TO REMAINING DEAD LOAD	0	-1/4	-1/4	-1/4	-1/8	1/8	3/8	3/8	1/4	0
GEOMETRIC CORRECTION	0	1 7/8	3 3/16	3 1/2	3 15/16	4 1/4	3 15/16	3 3/16	1 7/8	0
REQUIRED SHOP CAMBER	0	1 9/16	2 7/8	3 1/4	3 7/8	4 1/16	4 7/16	3 11/16	2 3/16	0

NOTES:

1. SEE SHEET 17/46 FOR GIRDER ELEVATIONS
2. GEOMETRIC CORRECTION SHOWN IS ADJUSTMENT DUE TO VERTICAL CURVE
3. HEAT CURVING IS NOT PERMITTED.

NO.	DATE	DESCRIPTION
0	2019-03-13	RFC

ISSUE RECORD

DESIGN AGENCY
Michael Baker INTERNATIONAL
1111 SUPERIOR AVE E., SUITE 2300, CLEVELAND, OH 44114

DESIGNED	DRAWN	REVIEWED	DATE
ETB	EKW	JWB	3/01/19
CHECKED	REVISED	STRUCTURE FILE NUMBER	
MKB		1801517	

RECORD PLANS

DEFLECTION AND CAMBER TABLE (2 OF 4)
CUY-010-1976L
OH-10 WESTBOUND OVER GCRTA BLUE AND GREEN LINES

RECORD PLANS

CUY-IR490/SR010-2.09/19.28
PID No. 96833

BU-19 - GCRTA BLUE/GREEN BRIDGES & CATENARY MODIFICATIONS
...\Sheets\010_1976L_SS502.dgn 6/27/2019 5:03:12 PM Christopher.Lemley

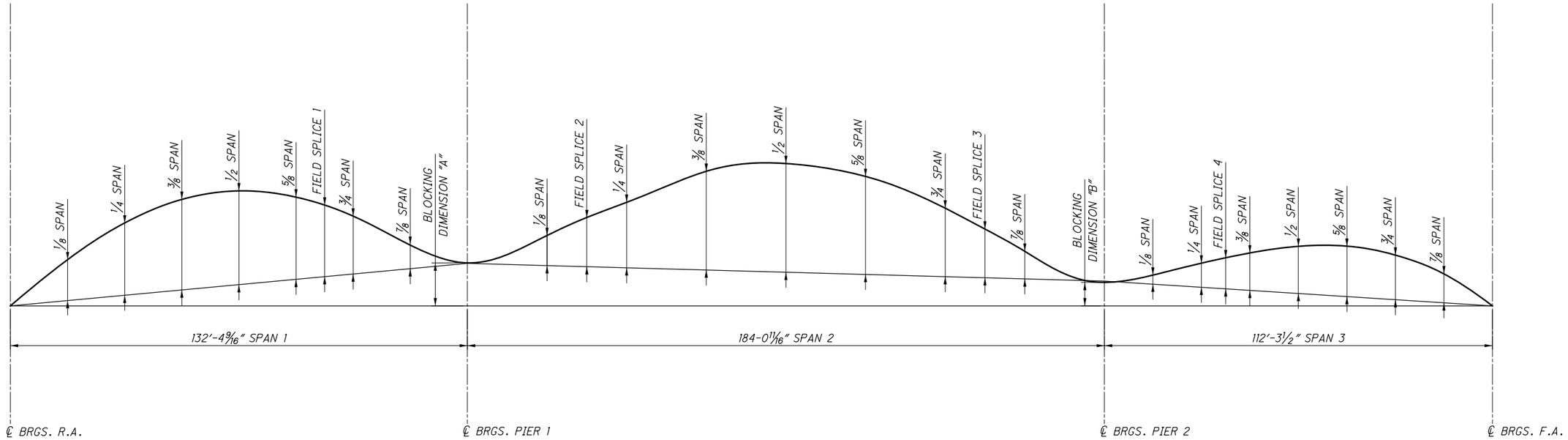

BLOCKING DIMENSIONS	
DIM. "A"	DIM. "B"
10 9/16"	21 3/4 "

DEFLECTION AND CAMBER (INCHES) - GIRDER 3										
SPAN 1										
CAMBER DESCRIPTION	℄ BRGS R.A.	1/8 SPAN	1/4 SPAN	3/8 SPAN	1/2 SPAN	5/8 SPAN	FIELD SPLICE 1	3/4 SPAN	7/8 SPAN	℄ BRGS PIER 1
DEFLECTION DUE TO WEIGHT OF STEEL	0	3/16	5/16	3/8	5/16	3/16	1/8	1/8	0	0
DEFLECTION DUE TO REMAINING DEAD LOAD	0	11/16	1 1/8	1 3/16	15/16	1/2	1/4	1/8	-1/8	0
GEOMETRIC CORRECTION	0	0	0	0	0	0	0	0	0	0
REQUIRED SHOP CAMBER	0	7/8	1 7/16	1 9/16	1 1/4	3/4	3/8	3/16	-1/8	0

DEFLECTION AND CAMBER (INCHES) - GIRDER 3											
SPAN 2											
CAMBER DESCRIPTION	℄ BRGS PIER 1	1/8 SPAN	FIELD SPLICE 2	1/4 SPAN	3/8 SPAN	1/2 SPAN	5/8 SPAN	3/4 SPAN	FIELD SPLICE 3	7/8 SPAN	℄ BRGS PIER 2
DEFLECTION DUE TO WEIGHT OF STEEL	0	1/4	1/2	5/8	15/16	1 1/16	1	11/16	7/16	5/16	0
DEFLECTION DUE TO REMAINING DEAD LOAD	0	1 5/16	2 5/16	3	4 1/2	5 1/8	4 9/16	3 1/8	2	1 3/8	0
GEOMETRIC CORRECTION	0	7/16	11/16	7/8	1 5/16	1 3/4	2 3/16	2 9/16	2 5/16	1 15/16	0
REQUIRED SHOP CAMBER	0	2	3 9/16	4 1/2	6 3/4	7 15/16	7 3/4	6 3/8	4 3/4	3 5/8	0

DEFLECTION AND CAMBER (INCHES) - GIRDER 3										
SPAN 3										
CAMBER DESCRIPTION	℄ BRGS PIER 2	1/8 SPAN	1/4 SPAN	FIELD SPLICE 4	3/8 SPAN	1/2 SPAN	5/8 SPAN	3/4 SPAN	7/8 SPAN	℄ BRGS F.A.
DEFLECTION DUE TO WEIGHT OF STEEL	0	-1/16	-1/16	-1/16	0	1/16	1/16	1/16	1/16	0
DEFLECTION DUE TO REMAINING DEAD LOAD	0	-5/16	-5/16	-5/16	-1/4	0	3/16	1/4	3/16	0
GEOMETRIC CORRECTION	0	1 3/4	2 15/16	3 1/8	3 11/16	3 15/16	3 11/16	2 15/16	1 3/4	0
REQUIRED SHOP CAMBER	0	1 3/8	2 9/16	2 3/4	3 1/2	4	4	3 5/16	1 15/16	0

NOTES:

1. SEE SHEET 17/46 FOR GIRDER ELEVATIONS
2. GEOMETRIC CORRECTION SHOWN IS ADJUSTMENT DUE TO VERTICAL CURVE
3. HEAT CURVING IS NOT PERMITTED.

NO.	DATE	DESCRIPTION
0	2019-03-13	RFC

ISSUE RECORD

DESIGN AGENCY
Michael Baker INTERNATIONAL
1111 SUPERIOR AVE E., SUITE 2300, CLEVELAND, OH 44114

DESIGNED	DRAWN	REVIEWED	DATE
ETB	EKW	JWB	3/01/19
CHECKED	REVISED	STRUCTURE FILE NUMBER	
MKB		1801517	

RECORD PLANS

DEFLECTION AND CAMBER TABLE (3 OF 4)
CUY-010-1976L
OH-10 WESTBOUND OVER GCRTA BLUE AND GREEN LINES

RECORD PLANS

CUY-IR490/SR010-2.09/19.28
PID No. 96833

RECORD PLANS

BU-19 - GCRTA BLUE/GREEN BRIDGES & CATENARY MODIFICATIONS
...\Sheets\010_1976L_SS503.dgn 6/27/2019 5:03:19 PM Christopher.Lemley

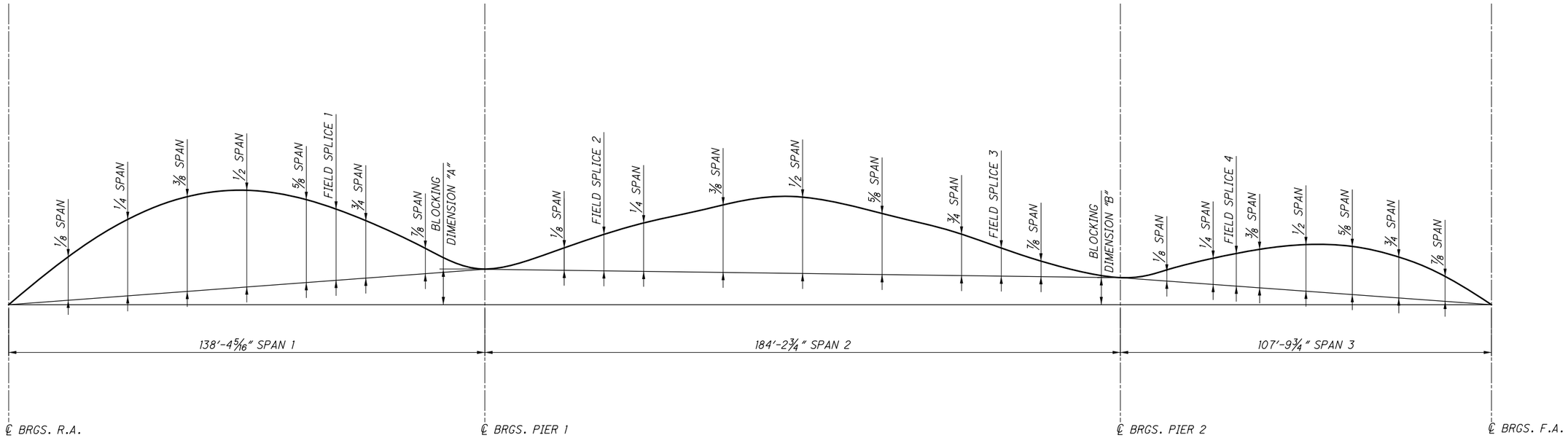

BLOCKING DIMENSIONS	
DIM. "A"	DIM. "B"
12 3/8 "	23 1/4 "

DEFLECTION AND CAMBER (INCHES) - GIRDER 4										
SPAN 1										
CAMBER DESCRIPTION	℄ BRGS R.A.	1/8 SPAN	1/4 SPAN	3/8 SPAN	1/2 SPAN	5/8 SPAN	FIELD SPLICE 1	3/4 SPAN	7/8 SPAN	℄ BRGS PIER 1
DEFLECTION DUE TO WEIGHT OF STEEL	0	1/4	3/8	1/16	3/8	1/4	1/8	1/8	0	0
DEFLECTION DUE TO REMAINING DEAD LOAD	0	7/8	1 7/16	1 9/16	1 5/16	3/4	5/16	3/16	-1/16	0
GEOMETRIC CORRECTION	0	0	0	0	0	0	0	0	0	0
REQUIRED SHOP CAMBER	0	1 1/8	1 13/16	2	1 11/16	1	7/16	5/16	-1/16	0

DEFLECTION AND CAMBER (INCHES) - GIRDER 4											
SPAN 2											
CAMBER DESCRIPTION	℄ BRGS PIER 1	1/8 SPAN	FIELD SPLICE 2	1/4 SPAN	3/8 SPAN	1/2 SPAN	5/8 SPAN	3/4 SPAN	FIELD SPLICE 3	7/8 SPAN	℄ BRGS PIER 2
DEFLECTION DUE TO WEIGHT OF STEEL	0	1/4	7/16	5/8	15/16	1 1/8	1	11/16	7/16	5/16	0
DEFLECTION DUE TO REMAINING DEAD LOAD	0	1 3/16	2	2 7/8	4 7/16	5 1/8	4 5/8	3 1/8	2 1/16	1 3/8	0
GEOMETRIC CORRECTION	0	11/16	1 1/16	1 7/16	2 1/8	2 13/16	3 1/2	3 11/16	3 1/8	2 1/2	0
REQUIRED SHOP CAMBER	0	2 3/16	3 7/16	4 15/16	7 1/2	9 1/16	9 1/8	7 1/2	5 5/8	4 3/16	0

DEFLECTION AND CAMBER (INCHES) - GIRDER 4											
SPAN 3											
CAMBER DESCRIPTION	℄ BRGS PIER 2	1/8 SPAN	1/4 SPAN	FIELD SPLICE 4	3/8 SPAN	1/2 SPAN	5/8 SPAN	3/4 SPAN	7/8 SPAN	℄ BRGS F.A.
DEFLECTION DUE TO WEIGHT OF STEEL	0	-1/16	-1/16	-1/16	-1/16	0	1/16	1/16	1/16	0
DEFLECTION DUE TO REMAINING DEAD LOAD	0	-1/4	-5/16	-5/16	-1/4	0	3/16	1/4	3/16	0
GEOMETRIC CORRECTION	0	1 5/8	2 3/4	2 7/8	3 7/16	3 11/16	3 7/16	2 3/4	1 5/8	0
REQUIRED SHOP CAMBER	0	1 1/4	2 5/8	2 7/16	3 3/16	3 11/16	3 11/16	3 1/16	1 13/16	0

NOTES:

1. SEE SHEET 17/46 FOR GIRDER ELEVATIONS
2. GEOMETRIC CORRECTION SHOWN IS ADJUSTMENT DUE TO VERTICAL CURVE
3. HEAT CURVING IS NOT PERMITTED.

NO.	DATE	DESCRIPTION
0	2019-03-13	RFC

ISSUE RECORD

DESIGN AGENCY
Michael Baker INTERNATIONAL
1111 SUPERIOR AVE E., SUITE 2300, CLEVELAND, OH 44114

DESIGNED	DRAWN	REVIEWED	DATE
ETB	EKW	JWB	3/01/19
CHECKED	REVISED	STRUCTURE FILE NUMBER	
MKB		1801517	

RECORD PLANS

DEFLECTION AND CAMBER TABLE (4 OF 4)

CUY-010-1976L
OH-10 WESTBOUND OVER GCRTA BLUE AND GREEN LINES

RECORD PLANS

CUY-IR490/SR010-2.09/19.28
PID No. 96833

BU-19 - GCRTA BLUE/GREEN BRIDGES & CATENARY MODIFICATIONS
...\Sheets\010_1976L_SS504.dgn 6/27/2019 5:03:26 PM Christopher.Lemley

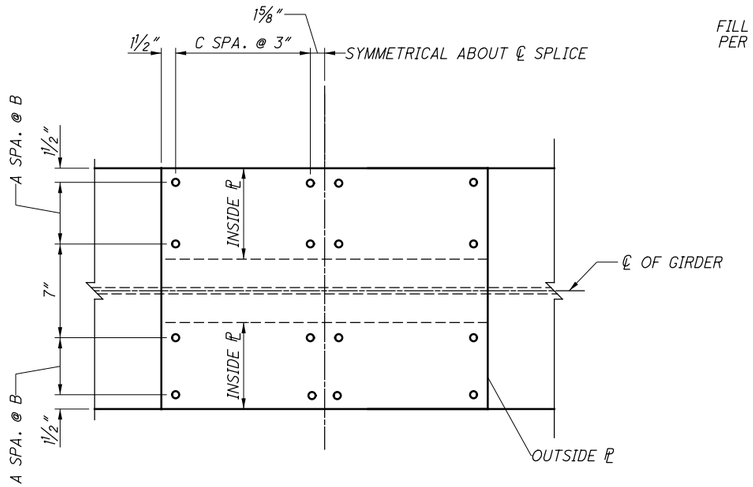

PLAN - TOP FLANGE

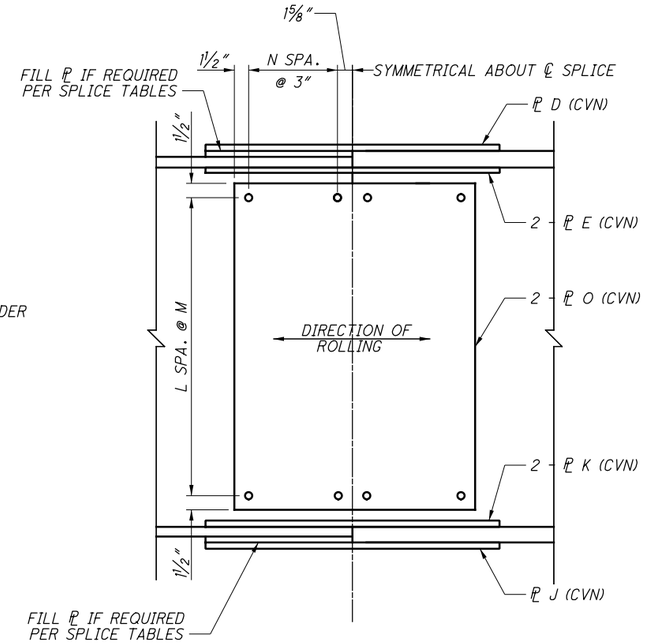

ELEVATION

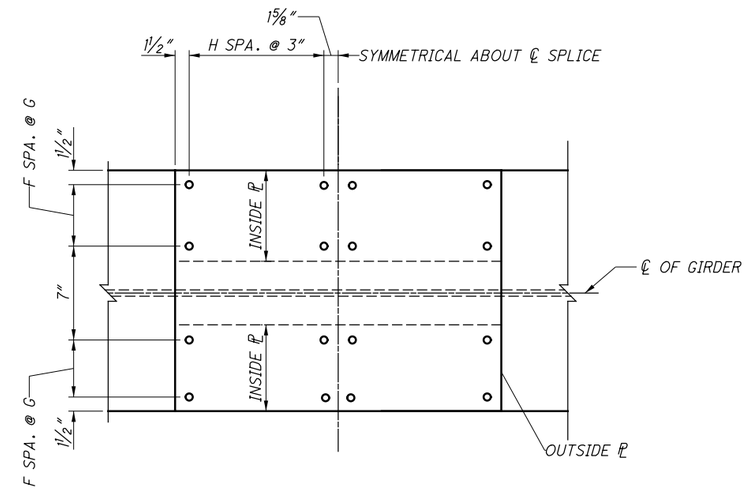

PLAN - BOTTOM FLANGE

FIELD SPLICE VARIABLE TABLE												
TOP FLANGE							BOTTOM FLANGE					
FS #	A	B	C	D	E	FILL PL	F	G	H	J	K	FILL PL
1WB	1	5	4	3/4 x 20 x 2'-6 1/4"	7/8 x 8 x 2'-6 1/4"	1 1/2 x 20 x 1'-3"	1	6	6	1 x 22 x 3'-6 1/4"	1 1/8 x 9 x 3'-6 1/4"	1 1/4 x 22 x 1'-9"
2WB	1	5	4	3/4 x 20 x 2'-6 1/4"	7/8 x 8 x 2'-6 1/4"	1 1/2 x 20 x 1'-3"	2	3 1/2	7	1 1/4 x 24 x 4'-0 1/4"	1 1/2 x 10 x 4'-0 1/4"	1 1/8 x 24 x 2'-0"
3WB	1	5	4	3/4 x 20 x 2'-6 1/4"	7/8 x 8 x 2'-6 1/4"	1 1/2 x 20 x 1'-3"	2	3 1/2	8	1 1/4 x 24 x 4'-6 1/4"	1 3/8 x 10 x 4'-6 1/4"	1 x 24 x 2'-3"
4WB	1	5	5	3/4 x 20 x 3'-0 1/4"	7/8 x 8 x 3'-0 1/4"	1 1/2 x 20 x 1'-6"	1	6	9	1 x 22 x 5'-0 1/4"	1 1/8 x 9 x 5'-0 1/4"	1 1/8 x 22 x 2'-6"

FIELD SPLICE VARIABLE TABLE					
WEB					
FS #	L	M	N	O	FILL PL
1WB	16	3"	2	7/16 x 18 1/4 x 4'-3"	--
2WB	16	3"	2	7/16 x 18 1/4 x 4'-3"	--
3WB	16	3"	2	7/16 x 18 1/4 x 4'-3"	--
4WB	13	3 3/4"	3	7/16 x 24 1/4 x 4'-3 3/4"	--

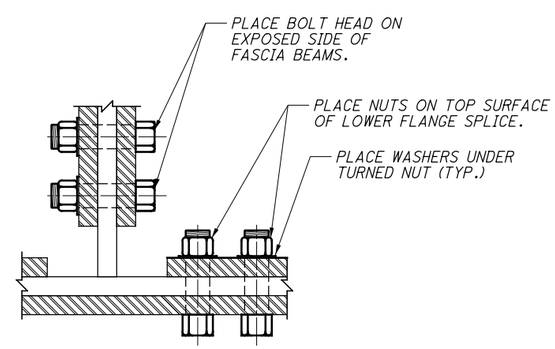

BOLTED SPLICE
PARTIAL SECTION

LEGEND

℄	CENTERLINE
DIA.	DIAMETER
FS	FIELD SPLICE
SPA.	SPACES
TYP.	TYPICAL

NOTES:

1. ALL SPLICE MATERIAL IS ASTM A709 GRADE (50W) UNLESS NOTED OTHERWISE.
2. ALL BOLTS SHOWN ARE A325, TYPE III, 1" DIAMETER, HIGH STRENGTH UNLESS NOTED OTHERWISE.
3. WHERE A SHAPE OR PLATE IS DESIGNATED (CVN), THE MATERIAL SHALL MEET SPECIFIED MINIMUM NOTCH TOUGHNESS REQUIREMENTS AS SPECIFIED IN 711.01.
4. FOR FIELD SPLICE LOCATIONS, SEE FRAMING PLAN.
5. SPLICE PLATE EDGE DISTANCES REQUIRE GAS CUT OR ROLLED EDGES.

NO.	DATE	DESCRIPTION
0	2019-03-13	RFC

ISSUE RECORD

DESIGN AGENCY
Michael Baker INTERNATIONAL
1111 SUPERIOR AVE E., SUITE 2300, CLEVELAND, OH 44114

DESIGNED	DRAWN	REVIEWED	DATE
SSW	SSW	JWB	3/01/19
CHECKED	REVISED	STRUCTURE FILE NUMBER	
ETB		1801517	

RECORD PLANS

SPLICE DETAILS
CUY-010-1976L
OH-10 WESTBOUND OVER GCRTA BLUE AND GREEN LINES

RECORD PLANS

CUY-IR490/SR010-2.09/19.28
PID No. 96833

RECORD PLANS

BU-19 - GCRTA BLUE/GREEN BRIDGES & CATENARY MODIFICATIONS
...\Sheets\010_1976L_SD503.dgn 6/27/2019 5:03:30 PM Christopher.Lemley

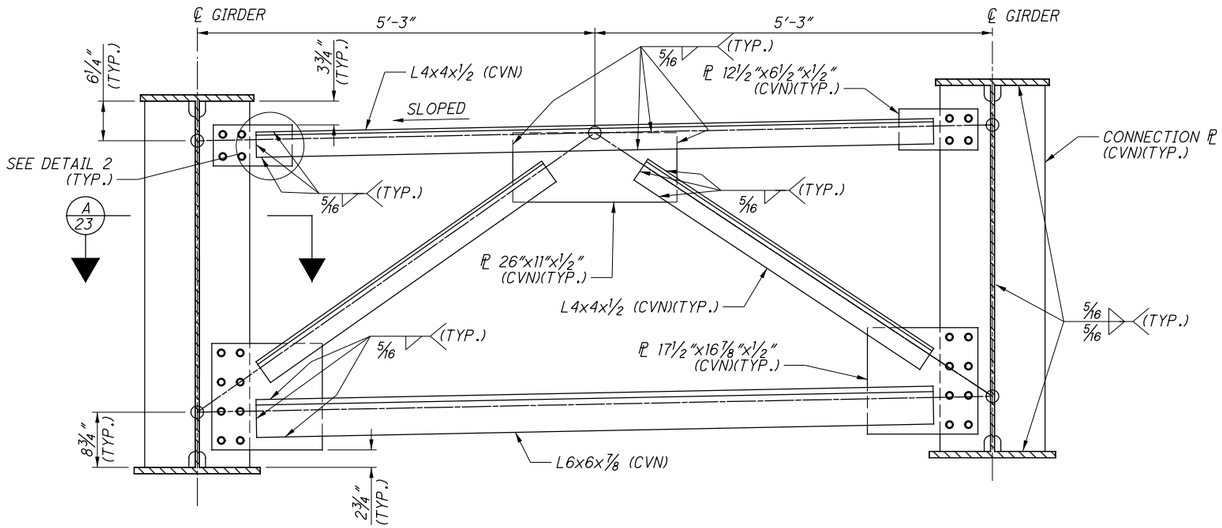

INTERMEDIATE K-FRAME

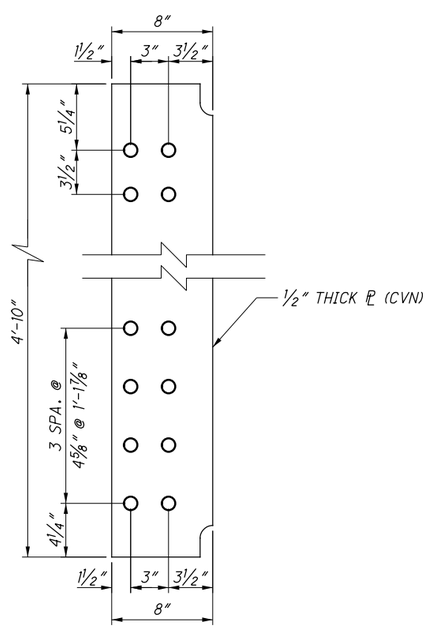

INTERMEDIATE K-FRAME CONNECTION PLATE

MEMBER SECTION	MINIMUM WELD LENGTH, L MIN
UPPER CHORD L4x4x½	4"
DIAGONAL L4x4x½	4"
LOWER CHORD L6x6x⅞	8"

NOTES :

1. ALL STEEL IS ASTM 709, GRADE 50W, UNLESS NOTED OTHERWISE.
2. HIGH STRENGTH BOLTS SHALL BE 1" DIAMETER, ASTM A325, TYPE III, UNLESS NOTED OTHERWISE.
3. ALL BOLT HOLES SHALL BE 1 1/16" DIAMETER. K-FRAMES AND GIRDERS SHALL BE SHOP ASSEMBLED TO VERIFY FIT, UNLESS OTHER METHODS TO CHECK HOLE ALIGNMENT ARE APPROVED BY THE ODOT OFFICE OF MATERIALS MANAGEMENT IN ACCORDANCE WITH CMS 513.19 AND 513.24.
4. WHERE A SHAPE OR PLATE IS DESIGNATED 'CVN', FURNISH MATERIAL THAT MEETS THE MINIMUM NOTCH TOUGHNESS REQUIREMENTS AS SPECIFIED IN 711.01.
5. PREPARE FAYING SURFACES OF INTERMEDIATE K-FRAME BOLTED CONNECTIONS TO PROVIDE CLASS B SURFACES.

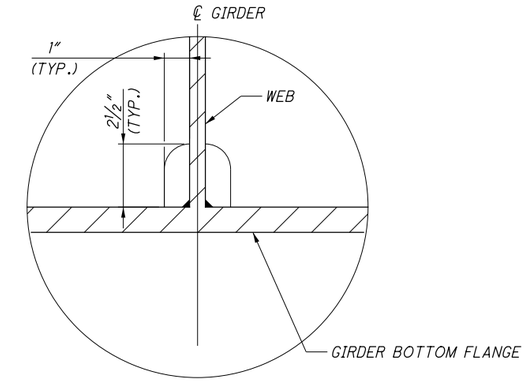

DETAIL 1

(TYP. BOTH TOP AND BOTTOM FLANGES)

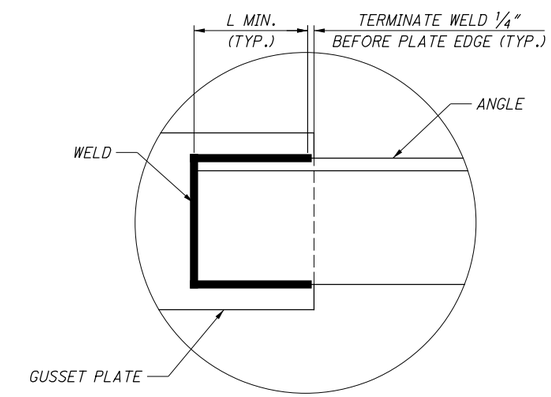

DETAIL 2

(TYP. ALL WELDED ANGLE CONNECTIONS)

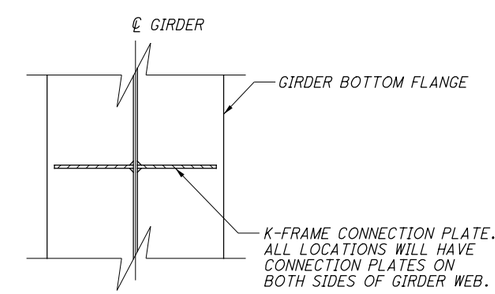

A 23 SECTION

NO.	DATE	DESCRIPTION
0	2019-03-13	RFC

ISSUE RECORD

DESIGN AGENCY
Michael Baker INTERNATIONAL
1111 SUPERIOR AVE E., SUITE 2300, CLEVELAND, OH 44114

DESIGNED	DRAWN	REVIEWED	DATE
ETB	ETB	JWB	3/01/19
CHECKED	REVISED	STRUCTURE FILE NUMBER	
MKB		1801517	

RECORD PLANS

INTERMEDIATE K-FRAME DETAILS

CUY-010-1976L

OH-10 WESTBOUND OVER GCRTA BLUE AND GREEN LINES

RECORD PLANS

CUY-IR490/SR010-2.09/19.28

PID No. 96833

RECORD PLANS

BU-19 - GCRTA BLUE/GREEN BRIDGES & CATENARY MODIFICATIONS
...\Sheets\010_1976L_SD504.dgn 6/27/2019 5:03:36 PM Christopher.Lemley

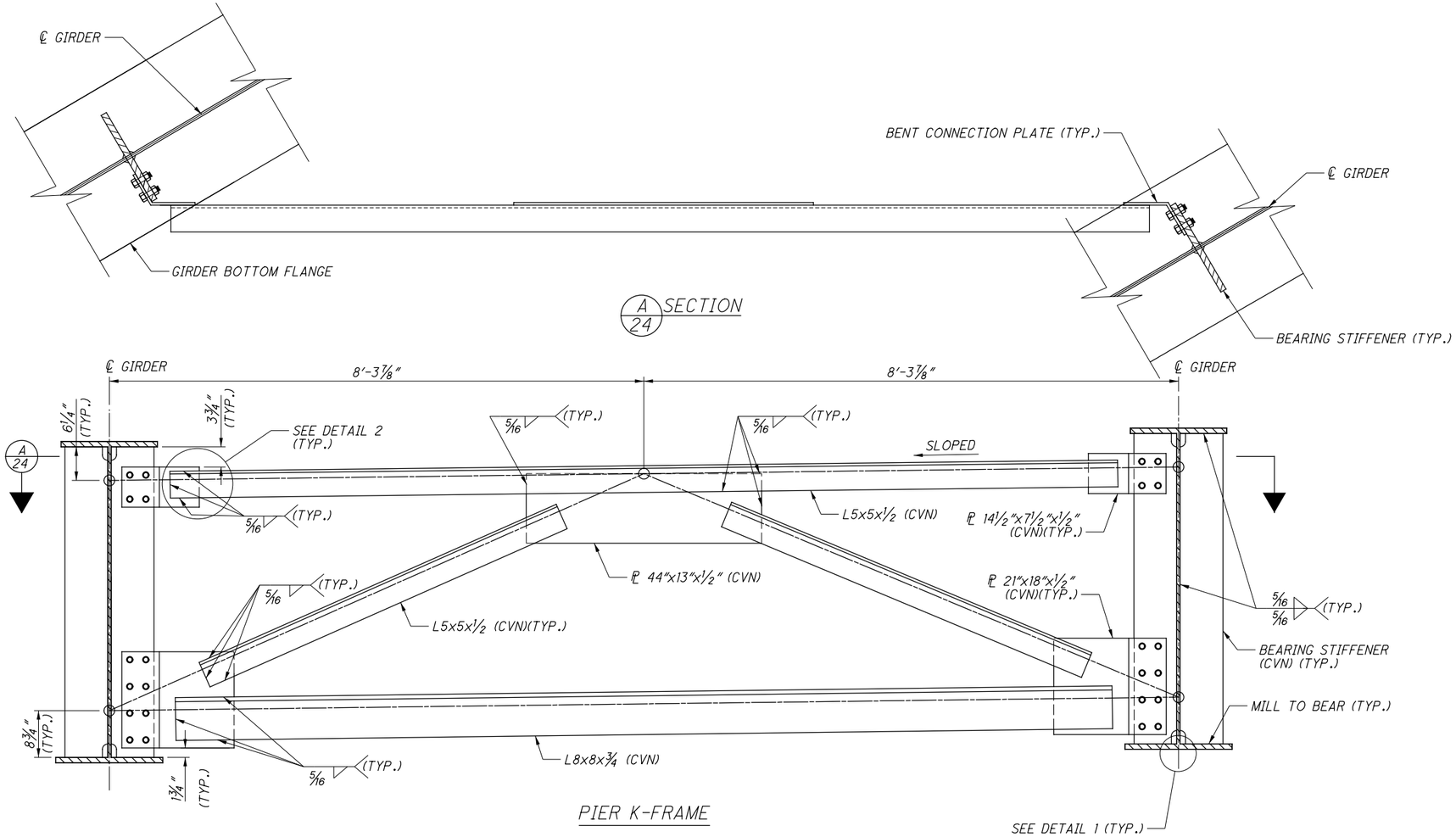

PIER K-FRAME

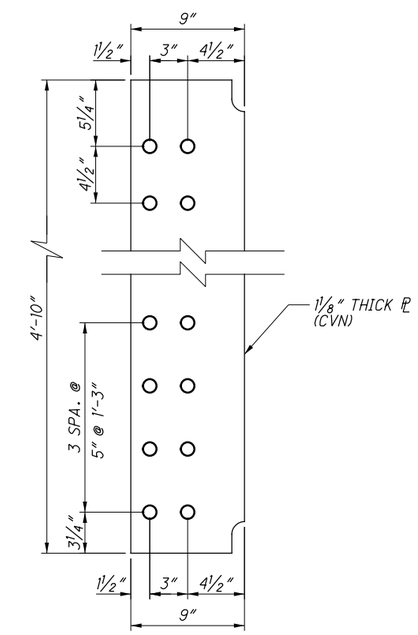

PIER BEARING STIFFENER

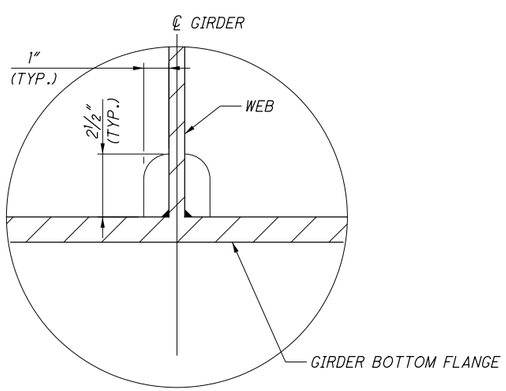

DETAIL 1

(TYP. BOTH TOP AND BOTTOM FLANGES)

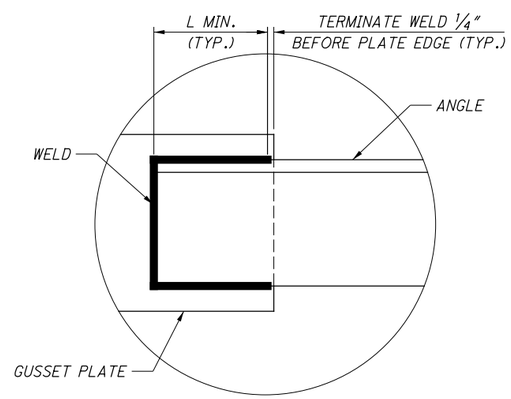

DETAIL 2

(TYP. ALL WELDED ANGLE CONNECTIONS)

MEMBER SECTION	MINIMUM WELD LENGTH, L MIN
UPPER CHORD L5x5x½	3"
DIAGONAL L5x5x½	3"
LOWER CHORD L8x8x¾	5"

NOTES :

1. ALL STEEL IS ASTM 709, GRADE 50W, UNLESS NOTED OTHERWISE.
2. HIGH STRENGTH BOLTS SHALL BE 1" DIAMETER, ASTM A325, TYPE III, UNLESS NOTED OTHERWISE.
3. ALL BOLT HOLES SHALL BE 1 1/16" DIAMETER. K-FRAMES AND GIRDERS SHALL BE SHOP ASSEMBLED TO VERIFY FIT, UNLESS OTHER METHODS TO CHECK HOLE ALIGNMENT ARE APPROVED BY THE ODOT OFFICE OF MATERIALS MANAGEMENT IN ACCORDANCE WITH CMS 513.19 AND 513.24.
4. WHERE A SHAPE OR PLATE IS DESIGNATED 'CVN', FURNISH MATERIAL THAT MEETS THE MINIMUM NOTCH TOUGHNESS REQUIREMENTS AS SPECIFIED IN 711.01.
5. PREPARE FAYING SURFACES OF PIER K-FRAME BOLTED CONNECTIONS TO PROVIDE CLASS B SURFACES.

NO.	DATE	DESCRIPTION
0	2019-03-13	RFC

ISSUE RECORD

DESIGN AGENCY
Michael Baker INTERNATIONAL
1111 SUPERIOR AVE E., SUITE 2300, CLEVELAND, OH 44114

DESIGNED	DRAWN	REVIEWED	DATE
ETB	ETB	JWB	3/01/19
CHECKED	REVISED	STRUCTURE FILE NUMBER	
MKB		1801517	

RECORD PLANS

PIER K-FRAME DETAILS
CUY-010-1976L
OH-10 WESTBOUND OVER GCRTA BLUE AND GREEN LINES

RECORD PLANS

CUY-IR490/SR010-2.09/19.28
PID No. 96833

RECORD PLANS

BU-19 - GCRTA BLUE/GREEN BRIDGES & CATENARY MODIFICATIONS
...\Sheets\010_1976L_SD510.dgn 6/27/2019 5:03:41 PM Christopher.Lemley

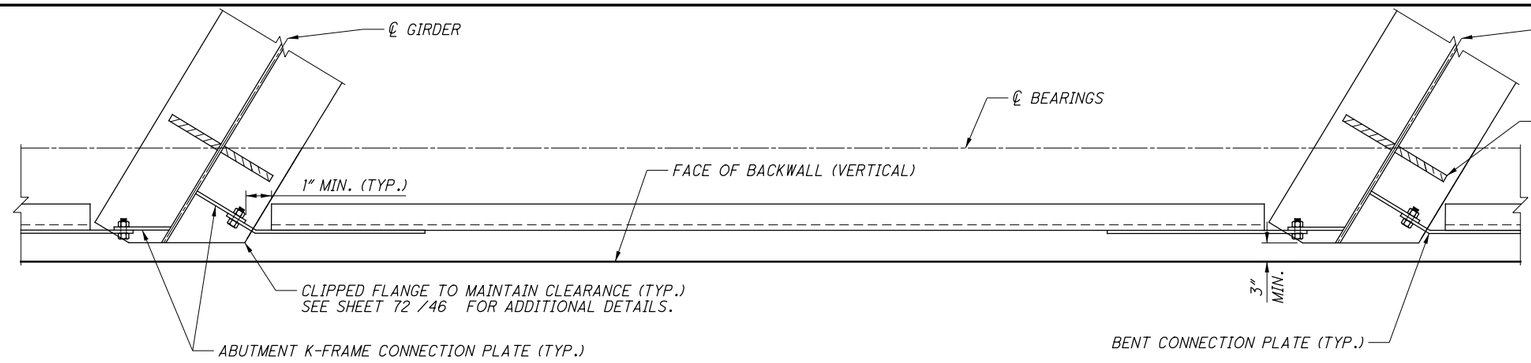

A/25 SECTION

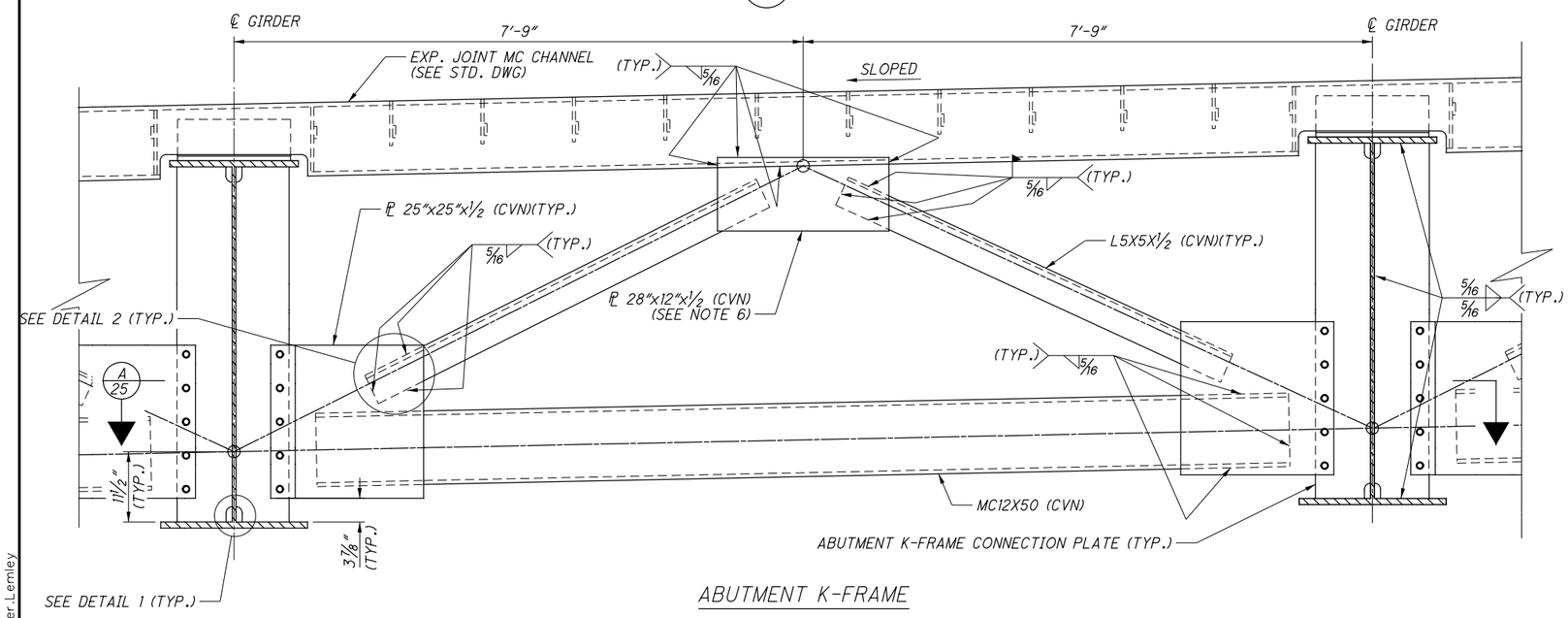

ABUTMENT K-FRAME

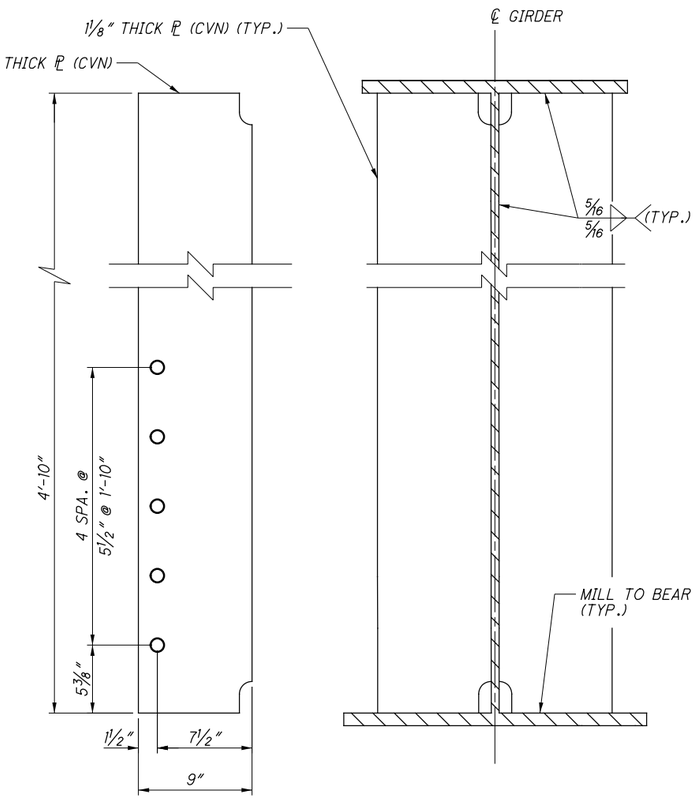

ABUTMENT K-FRAME CONNECTION PLATE

ABUTMENT BEARING STIFFENER

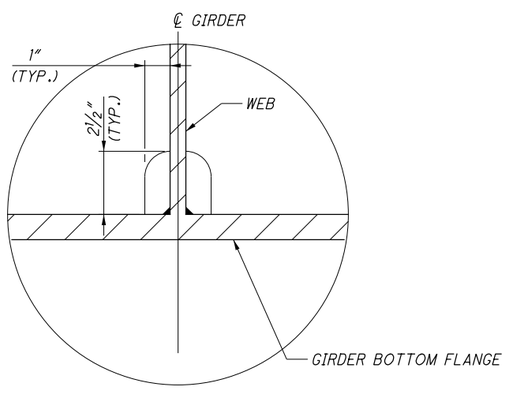

DETAIL 1

(TYP. BOTH TOP AND BOTTOM FLANGES)

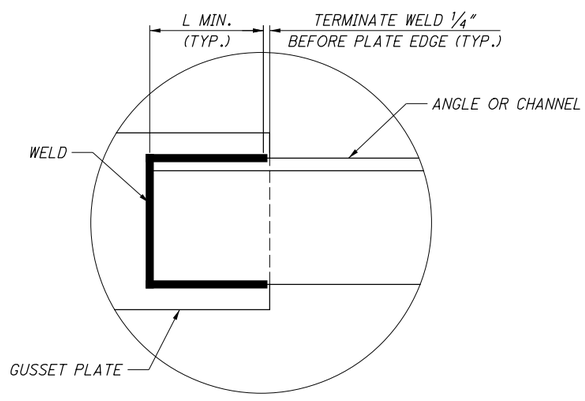

DETAIL 2

(TYP. ALL WELDED CONNECTIONS)

MEMBER SECTION	MINIMUM WELD LENGTH, L MIN
DIAGONAL L5x5x1/2	4 1/2"
LOWER CHORD MC12X50	5"

NOTES :

1. ALL STEEL IS ASTM 709, GRADE 50W, UNLESS NOTED OTHERWISE.
2. HIGH STRENGTH BOLTS SHALL BE 1" DIAMETER, ASTM A325, TYPE III, UNLESS NOTED OTHERWISE.
3. ALL BOLT HOLES SHALL BE 1 1/16" DIAMETER. K-FRAMES AND GIRDERS SHALL BE SHOP ASSEMBLED TO VERIFY FIT, UNLESS OTHER METHODS TO CHECK HOLE ALIGNMENT ARE APPROVED BY THE ODOT OFFICE OF MATERIALS MANAGEMENT IN ACCORDANCE WITH CMS 513.19 AND 513.24.
4. WHERE A SHAPE OR PLATE IS DESIGNATED 'CVN', FURNISH MATERIAL THAT MEETS THE MINIMUM NOTCH TOUGHNESS REQUIREMENTS AS SPECIFIED IN 711.01.
5. PREPARE FAYING SURFACES OF ABUTMENT K-FRAME BOLTED CONNECTIONS TO PROVIDE CLASS B SURFACES.
6. THE 1/2" PLATE IS PART OF THE EXPANSION JOINT SYSTEM. REFER TO EXJ-4-87 FOR MATERIAL AND COATING REQUIREMENTS.

NO.	DATE	DESCRIPTION
0	2019-03-13	RFC

ISSUE RECORD

DESIGN AGENCY
Michael Baker INTERNATIONAL
1111 SUPERIOR AVE E., SUITE 2300, CLEVELAND, OH 44114

DESIGNED	DRAWN	REVIEWED	DATE
ETB	ETB	JWB	3/01/19
CHECKED	REVISED	STRUCTURE FILE NUMBER	
MKB		1801517	

RECORD PLANS

ABUTMENT K-FRAME DETAILS
CUY-010-1976L
OH-10 WESTBOUND OVER GCRTA BLUE AND GREEN LINES

RECORD PLANS

CUY-IR490/SR010-2.09/19.28
PID No. 96833

RECORD PLANS

BU-19 - GCRTA BLUE/GREEN BRIDGES & CATENARY MODIFICATIONS
...\Sheets\010_1976L_SD511.dgn 6/27/2019 5:03:47 PM Christopher.Lemley

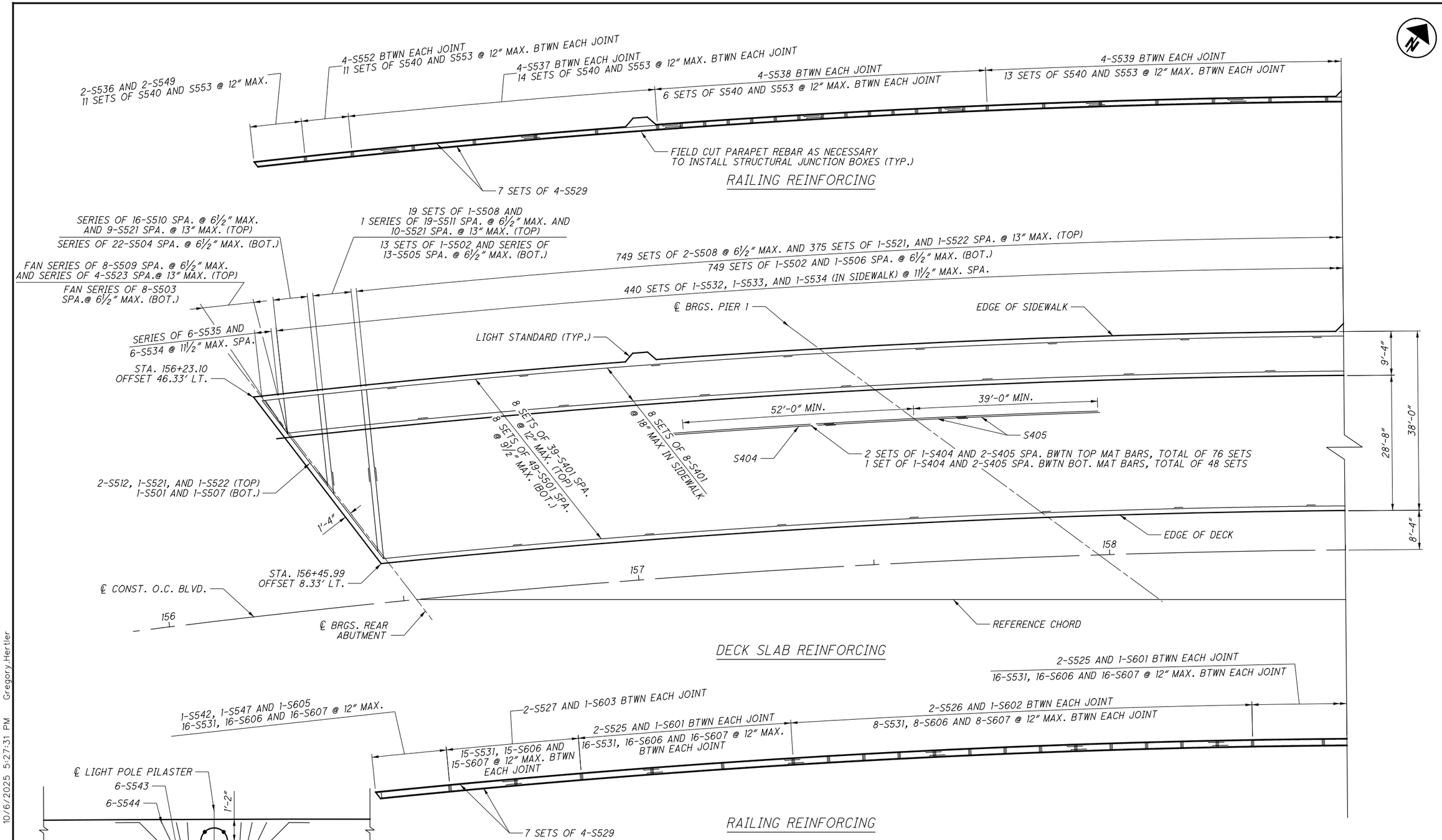

MINIMUM LAP LENGTHS:

#4 BAR 1'-11"
#5 BAR 3'-2"

NOTES:

1. FOR PARAPET JOINT SPACING, SEE SHEET 31 OF 46 .

2. PROVIDE 2" CONCRETE COVER ON REINFORCEMENT BARS UNLESS NOTED OTHERWISE.

3. SEE BLUE GREEN SUPPLEMENTAL HAUNCH REBAR SHEET 82A FOR SUPPLEMENTAL HAUNCH REINFORCEMENT RANGES PER DRFI 128.

NO.	DATE	DESCRIPTION
2	2024-09-10	RECORD DRAWINGS
1	2021-05-04	DRFI121
0	2019-03-13	RFC

ISSUE RECORD

DESIGN AGENCY
Michael Baker INTERNATIONAL
1111 SUPERIOR AVE E., SUITE 2300, CLEVELAND, OH 44114

DESIGNED	DRAWN	REVIEWED	DATE
ETB	SSW	JWB	3/01/19
CHECKED	REVISED	STRUCTURE FILE NUMBER	
EKW		1801517	

RECORD PLANS

DECK PLAN (1 OF 2)
CUY-010-1976L
OH-10 WESTBOUND OVER GCRTA BLUE AND GREEN LINES

RECORD PLANS

CUY-IR490/SR010-2.09/19.28
PID No. 96833

RECORD PLANS

BU-19 - GCRTA BLUE/GREEN BRIDGES & CATENARY MODIFICATIONS
...\Sheets\010_1976L_SD505.dgn 10/6/2025 5:27:31 PM Gregory.Hertler

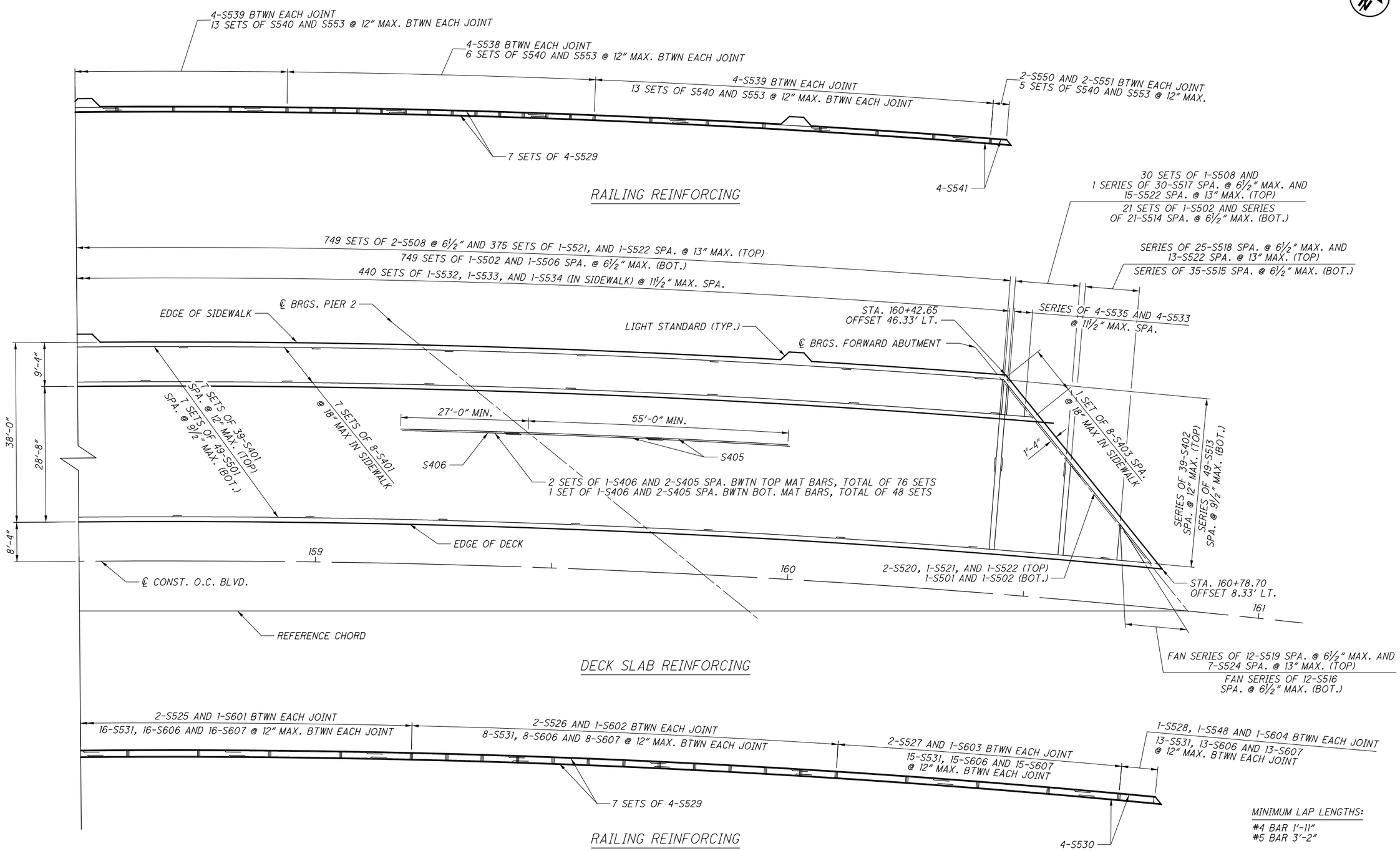

NOTES:

1. FOR PARAPET JOINT SPACING, SEE SHEET 31 OF 46 .

2. SEE BLUE GREEN SUPPLEMENTAL HAUNCH REBAR SHEET 82A FOR SUPPLEMENTAL HAUNCH REINFORCEMENT RANGES PER DRFI 128.

NO.	DATE	DESCRIPTION
2	2024-09-10	RECORD DRAWINGS
1	2021-05-04	DRFI121
0	2019-03-13	RFC

ISSUE RECORD

DESIGN AGENCY
Michael Baker INTERNATIONAL
1111 SUPERIOR AVE E., SUITE 2300, CLEVELAND, OH 44114

DESIGNED	DRAWN	REVIEWED	DATE
ETB	SSW	JWB	3/01/19
CHECKED	REVISED	STRUCTURE FILE NUMBER	
EKW		1801517	

RECORD PLANS

DECK PLAN (2 OF 2)
CUY-010-1976L
OH-10 WESTBOUND OVER GCRTA BLUE AND GREEN LINES

RECORD PLANS

CUY-IR490/SR010-2.09/19.28
PID No. 96833

RECORD PLANS

27/46

82/110

BU-19 - GCRTA BLUE/GREEN BRIDGES & CATENARY MODIFICATIONS
...\Sheets\010_1976L_SD506.dgn 10/6/2025 5:27:45 PM Gregory.Hertler

Haunch & Deck Thicknesses Based on Kokosing Survey Data

G1 L Location	Haunch Thickness	Deck Thickness	G2 L Location	Haunch Thickness	Deck Thickness	G3 L Location	Haunch Thickness	Deck Thickness	G4 L Location	Haunch Thickness	Deck Thickness
Fwd Abut	4.36	9.00	**Fwd Abut**	4.34	9.00	**Fwd Abut**	3.96	9.00	**Fwd Abut**	4.01	9.00
7/8 Span	4.51	9.00	**7/8 Span**	3.90	9.00	**7/8 Span**	3.62	9.00	**7/8 Span**	4.18	9.00
3/4 Span	4.16	9.00	**3/4 Span**	3.53	9.00	**3/4 Span**	3.15	9.00	**3/4 Span**	4.01	9.00
5/8 Span	3.95	9.00	**5/8 Span**	3.46	9.00	**5/8 Span**	3.14	9.00	**5/8 Span**	3.86	9.00
1/2 Span	3.71	9.00	**1/2 Span**	3.10	9.00	**1/2 Span**	2.99	9.00	**1/2 Span**	3.60	9.00
3/8 Span	3.86	9.00	**3/8 Span**	2.92	9.00	**3/8 Span**	2.76	9.00	**3/8 Span**	3.53	9.00
1/4 Span	1.48	9.00	**1/4 Span**	1.39	9.00	**1/4 Span**	1.27	9.00	**1/4 Span**	2.00	9.00
1/8 Span	2.51	9.00	**1/8 Span**	1.97	9.00	**1/8 Span**	1.87	9.00	**1/8 Span**	2.41	9.00
Pier 2	2.80	9.00	**Pier 2**	2.39	9.00	**Pier 2**	2.17	9.00	**Pier 2**	2.66	9.00
7/8 Span	2.99	9.00	**7/8 Span**	2.54	9.00	**7/8 Span**	2.67	9.00	**7/8 Span**	2.78	9.00
F. S. #3	2.35	9.00	**F. S. #3**	2.02	9.00	**F. S. #3**	1.99	9.00	**F. S. #3**	1.66	9.00
10 ft Span	4.54	9.00	**10 ft Span**	4.25	9.00	**10 ft Span**	4.37	9.00	**10 ft Span**	4.34	9.00
10 ft Span	4.64	9.00	**10 ft Span**	4.36	9.00	**10 ft Span**	4.16	9.00	**10 ft Span**	4.48	9.00
10 ft Span	4.78	9.00	**10 ft Span**	4.34	9.00	**10 ft Span**	4.20	9.00	**10 ft Span**	4.55	9.00
10 ft Span	4.69	9.00	**10 ft Span**	4.40	9.00	**10 ft Span**	4.07	9.00	**10 ft Span**	4.43	9.00
10 ft Span	4.87	9.00	**10 ft Span**	4.40	9.00	**10 ft Span**	4.13	9.00	**10 ft Span**	4.36	9.00
10 ft Span	4.78	9.00	**10 ft Span**	4.42	9.00	**10 ft Span**	4.32	9.00	**10 ft Span**	4.28	9.00
10 ft Span	5.00	9.00	**10 ft Span**	4.55	9.00	**10 ft Span**	4.40	9.00	**10 ft Span**	4.28	9.00
10 ft Span	4.84	9.00	**10 ft Span**	4.36	9.00	**10 ft Span**	4.34	9.00	**10 ft Span**	4.18	9.00
10 ft Span	5.00	9.00	**10 ft Span**	4.50	9.00	**10 ft Span**	4.57	9.00	**10 ft Span**	4.85	9.00
10 ft Span	5.00	9.00	**10 ft Span**	4.54	9.00	**10 ft Span**	4.49	9.00	**10 ft Span**	4.24	9.00
10 ft Span	4.86	9.00	**10 ft Span**	4.40	9.00	**10 ft Span**	4.51	9.00	**10 ft Span**	4.70	9.00
10 ft Span	4.85	9.00	**10 ft Span**	4.45	9.00						
10 ft Span	4.76	9.00									
F.S. #2	2.18	9.00	**F.S. #2**	2.05	9.00	**F. S. #2**	2.30	9.00	**F. S. #2**	1.88	9.00
1/8 Span	2.66	9.00	**1/8 Span**	2.52	9.00	**1/8 Span**	2.80	9.00	**1/8 Span**	2.46	9.00
Pier 1	2.11	9.00	**Pier 1**	2.47	9.00	**Pier 1**	2.54	9.00	**Pier 1**	2.54	9.00
7/8 Span	2.12	9.00	**7/8 Span**	2.55	9.00	**7/8 Span**	2.62	9.00	**7/8 Span**	2.51	9.00
3/4 Span	2.14	9.00	**3/4 Span**	2.76	9.00	**3/4 Span**	2.72	9.00	**3/4 Span**	2.42	9.00
5/8 Span	3.08	9.00	**5/8 Span**	3.99	9.00	**5/8 Span**	3.90	9.00	**5/8 Span**	3.71	9.00
1/2 Span	2.92	9.00	**1/2 Span**	3.67	9.00	**1/2 Span**	3.46	9.00	**1/2 Span**	3.46	9.00
3/8 Span	2.88	9.00	**3/8 Span**	3.58	9.00	**3/8 Span**	3.43	9.00	**3/8 Span**	3.25	9.00
1/4 Span	2.79	9.00	**1/4 Span**	3.42	9.00	**1/4 Span**	3.33	9.00	**1/4 Span**	3.27	9.00
1/8 Span	2.72	9.00	**1/8 Span**	3.43	9.00	**1/8 Span**	3.34	9.00	**1/8 Span**	3.20	9.00
Rear Abut	3.43	9.00	**Rear Abut**	3.60	9.00	**Rear Abut**	3.44	9.00	**Rear Abut**	3.55	9.00

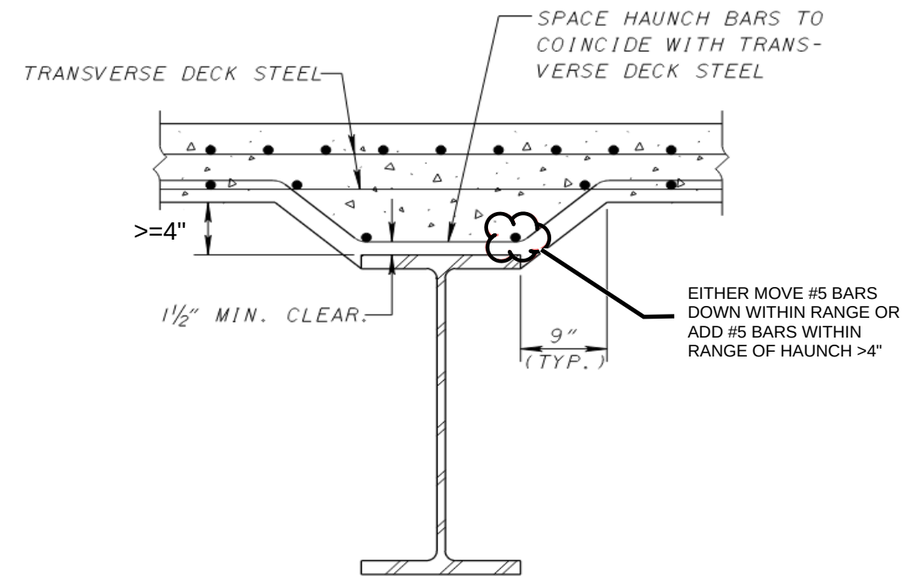

DEEP HAUNCH DETAIL

Range with haunch exceeding 4" requiring supplemental haunch reinforcement.

New S557 Bar within normal forming ranges

al # Bars: 186

Type 21

A =	20	in	tf = 20"
B =	9	in	
C =	24	in	
D =	6.25	in	Max Haunch - 1.5" + 1.5"+ (5/8")x2

Size Bar = #5

Wt per ft = 1.043 lb/ft

al Length = 1394 ft

al Weight = 1454 lbs

New S558 Bar within SIP Form ranges

Total # Bars: 901

Type 6

A =	17	in
B =	6.25	in
C =	24	in

Size Bar = #5

Wt per ft = 1.043 lb/ft

Total Length = 5821 ft

Total Weight = 6071 lbs

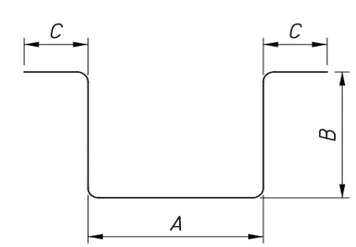

TYPE-6

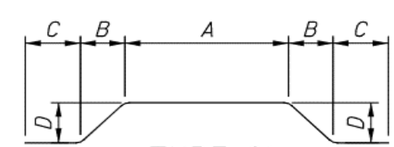

TYPE-21

NO.	DATE	DESCRIPTION
0	2024-09-10	RECORD DRAWINGS

ISSUE RECORD

DESIGN AGENCY
Michael Baker INTERNATIONAL
1111 SUPERIOR AVE E., SUITE 2300, CLEVELAND, OH 44114

RECORD PLANS

DRFI 128 RESPONSE BLUE GREEN SUPPLEMENTAL HAUNCH REBAR
CUY-010-1976L
OH-10 WESTBOUND OVER GCRTA BLUE AND GREEN LINES

RECORD PLANS

CUY-IR490/SR010-2.09/19.28
PID No. 96833

RECORD PLANS

27A/46

82A/110

BU-19 - GCRTA BLUE/GREEN BRIDGES & CATENARY MODIFICATIONS
...\Sheets\010_1978R_SD406.dgn 9/19/2025 6:40:18 PM Gregory.Hertler

FINAL DECK AND SIDEWALK SURFACE STATIONS, OFFSETS & ELEVATIONS

	ELEVATION	℄ BRGS R.A.	1/8 SPAN	1/4 SPAN	3/8 SPAN	1/2 SPAN	5/8 SPAN	FIELD SPLICE 1	3/4 SPAN	7/8 SPAN	℄ BRGS PIER 1
SPAN 1	FACE OF PARAPET*	156+25.41 45.00' LT.	156+40.06 45.00' LT.	156+54.72 45.00' LT.	156+69.37 45.00' LT.	156+84.02 45.00' LT.	156+98.68 45.00' LT.	- -	157+13.33 45.00' LT.	157+27.98 45.00' LT.	157+42.63 45.00' LT.
		681.95'	682.22'	682.49'	682.76'	683.03'	683.30'	-	683.57'	683.85'	684.12'
	GIRDER G1*	156+26.55 43.08' LT.	156+41.34 43.08' LT.	156+56.14 43.08' LT.	156+70.93 43.08' LT.	156+85.73 43.08' LT.	157+00.52 43.08' LT.	157+08.84 43.08' LT.	157+15.31 43.08' LT.	157+30.11 43.08' LT.	157+44.90 43.08' LT.
		681.93'	682.20'	682.48'	682.75'	683.03'	683.30'	683.45'	683.57'	683.85'	684.12'
	FACE OF CURB	156+30.17 37.00' LT.	156+45.42 37.00' LT.	156+60.66 37.00' LT.	156+75.91 37.00' LT.	156+91.16 37.00' LT.	157+06.41 37.00' LT.	- -	157+21.65 37.00' LT.	157+36.90 37.00' LT.	157+52.15 37.00' LT.
		681.21'	681.50'	681.78'	682.06'	682.34'	682.62'	-	682.91'	683.19'	683.47'
	GIRDER G2	156+32.81 32.58' LT.	156+48.39 32.58' LT.	156+63.97 32.58' LT.	156+79.55 32.58' LT.	156+95.13 32.58' LT.	157+10.71 32.58' LT.	157+20.12 32.58' LT.	157+26.29 32.58' LT.	157+41.87 32.58' LT.	157+57.45 32.58' LT.
		681.35'	681.64'	681.93'	682.22'	682.50'	682.79'	682.97'	683.08'	683.37'	683.66'
	GIRDER G3	156+39.14 22.08' LT.	156+55.53 22.08' LT.	156+71.91 22.08' LT.	156+88.29 22.08' LT.	157+04.68 22.08' LT.	157+21.06 22.08' LT.	157+30.77 22.08' LT.	157+37.44 22.08' LT.	157+53.83 22.08' LT.	157+70.21 22.08' LT.
		681.68'	681.98'	682.28'	682.59'	682.89'	683.19'	683.37'	683.50'	683.80'	684.10'
	GIRDER G4	156+45.55 11.58' LT.	156+62.75 11.58' LT.	156+79.96 11.58' LT.	156+97.16 11.58' LT.	157+14.37 11.58' LT.	157+31.57 11.58' LT.	157+44.93 11.58' LT.	157+48.77 11.58' LT.	157+65.98 11.58' LT.	157+83.18 11.58' LT.
		682.01'	682.32'	682.64'	682.96'	683.28'	683.60'	683.84'	683.92'	684.23'	684.55'
	TOE OF PARAPET	156+46.52 10.00' LT.	156+63.85 10.00' LT.	156+81.18 10.00' LT.	156+98.51 10.00' LT.	157+15.84 10.00' LT.	157+33.17 10.00' LT.	- -	157+50.50 10.00' LT.	157+67.83 10.00' LT.	157+85.16 10.00' LT.
		682.06'	682.38'	682.70'	683.02'	683.34'	683.66'	-	683.98'	684.30'	684.62'

	ELEVATION	℄ BRGS PIER 1	1/8 SPAN	FIELD SPLICE 2	1/4 SPAN	3/8 SPAN	1/2 SPAN	5/8 SPAN	3/4 SPAN	FIELD SPLICE 3	7/8 SPAN	℄ BRGS PIER 2
SPAN 2	FACE OF PARAPET*	157+42.63 45.00' LT.	157+65.14 45.00' LT.	- -	157+87.65 45.00' LT.	158+10.16 45.00' LT.	158+32.67 45.00' LT.	158+55.18 45.00' LT.	158+77.69 45.00' LT.	- -	159+00.20 45.00' LT.	159+22.70 45.00' LT.
		684.12'	684.53'	-	684.95'	685.37'	685.78'	686.20'	686.62'	-	687.03'	687.39'
	GIRDER G1*	157+44.90 43.08' LT.	157+67.43 43.08' LT.	157+72.00 43.08' LT.	157+89.96 43.08' LT.	158+12.49 43.08' LT.	158+35.03 43.08' LT.	158+57.56 43.08' LT.	158+80.09 43.08' LT.	159+01.34 43.08' LT.	159+02.62 43.08' LT.	159+25.15 43.08' LT.
		684.12'	684.54'	684.62'	684.95'	685.37'	685.79'	686.20'	686.62'	687.01'	687.04'	687.39'
	FACE OF CURB	157+52.15 37.00' LT.	157+74.75 37.00' LT.	- -	157+97.35 37.00' LT.	158+19.95 37.00' LT.	158+42.55 37.00' LT.	158+65.15 37.00' LT.	158+87.75 37.00' LT.	- -	159+10.35 37.00' LT.	159+32.95 37.00' LT.
		683.47'	683.89'	-	684.31'	684.72'	685.14'	685.56'	685.98'	-	686.39'	686.70'
	GIRDER G2	157+57.45 32.58' LT.	157+80.11 32.58' LT.	157+87.20 32.58' LT.	158+02.76 32.58' LT.	158+25.41 32.58' LT.	158+48.06 32.58' LT.	158+70.71 32.58' LT.	158+93.37 32.58' LT.	159+12.07 32.58' LT.	159+16.02 32.58' LT.	159+38.67 32.58' LT.
		683.66'	684.08'	684.21'	684.49'	684.91'	685.33'	685.75'	686.17'	686.50'	686.56'	686.85'
	GIRDER G3	157+70.21 22.08' LT.	157+92.99 22.08' LT.	158+07.14 22.08' LT.	158+15.77 22.08' LT.	158+38.54 22.08' LT.	158+61.32 22.08' LT.	158+84.10 22.08' LT.	159+06.88 22.08' LT.	159+21.26 22.08' LT.	159+29.66 22.08' LT.	159+52.44 22.08' LT.
		684.10'	684.52'	684.79'	684.94'	685.37'	685.79'	686.21'	686.63'	686.85'	686.96'	687.18'
	GIRDER G4	157+83.18 11.58' LT.	158+06.09 11.58' LT.	158+17.12 11.58' LT.	158+29.00 11.58' LT.	158+51.91 11.58' LT.	158+74.82 11.58' LT.	158+97.72 11.58' LT.	159+20.63 11.58' LT.	159+34.77 11.58' LT.	159+43.54 11.58' LT.	159+66.45 11.58' LT.
		684.55'	684.98'	685.18'	685.40'	685.82'	686.25'	686.67'	687.05'	687.23'	687.32'	687.47'
	TOE OF PARAPET	157+85.16 10.00' LT.	158+08.09 10.00' LT.	- -	158+31.01 10.00' LT.	158+53.94 10.00' LT.	158+76.87 10.00' LT.	158+99.80 10.00' LT.	159+22.73 10.00' LT.	- -	159+45.65 10.00' LT.	159+68.58 10.00' LT.
		684.62'	685.04'	-	685.47'	685.89'	686.32'	686.74'	687.11'	-	687.37'	687.51'

	ELEVATION	℄ BRGS PIER 2	1/8 SPAN	1/4 SPAN	FIELD SPLICE 4	3/8 SPAN	1/2 SPAN	5/8 SPAN	3/4 SPAN	7/8 SPAN	℄ BRGS F.A.
SPAN 3	FACE OF PARAPET*	159+22.70 45.00' LT.	159+37.63 45.00' LT.	159+52.55 45.00' LT.	- -	159+67.47 45.00' LT.	159+82.39 45.00' LT.	159+97.32 45.00' LT.	160+12.24 45.00' LT.	160+27.16 45.00' LT.	160+42.09 45.00' LT.
		687.39'	687.57'	687.71'	-	687.79'	687.83'	687.82'	687.76'	687.66'	687.51'
	GIRDER G1*	159+25.15 43.08' LT.	159+39.99 43.08' LT.	159+54.83 43.08' LT.	159+55.48 43.08' LT.	159+69.67 43.08' LT.	159+84.50 43.08' LT.	159+99.34 43.08' LT.	160+14.18 43.08' LT.	160+29.02 43.08' LT.	160+43.86 43.08' LT.
		687.39'	687.56'	687.68'	687.69'	687.76'	687.79'	687.78'	687.71'	687.60'	687.45'
	FACE OF CURB	159+32.95 37.00' LT.	159+47.53 37.00' LT.	159+62.10 37.00' LT.	- -	159+76.67 37.00' LT.	159+91.24 37.00' LT.	160+05.81 37.00' LT.	160+20.38 37.00' LT.	160+34.96 37.00' LT.	160+49.53 37.00' LT.
		686.70'	686.84'	686.94'	-	687.00'	687.01'	686.97'	686.89'	686.76'	686.59'
	GIRDER G2	159+38.67 32.58' LT.	159+53.05 32.58' LT.	159+67.42 32.58' LT.	159+72.40 32.58' LT.	159+81.80 32.58' LT.	159+96.17 32.58' LT.	160+10.55 32.58' LT.	160+24.92 32.58' LT.	160+39.30 32.58' LT.	160+53.67 32.58' LT.
		686.85'	686.98'	687.06'	687.07'	687.09'	687.09'	687.04'	686.94'	686.80'	686.62'
	GIRDER G3	159+52.44 22.08' LT.	159+66.33 22.08' LT.	159+80.23 22.08' LT.	159+82.39 22.08' LT.	159+94.13 22.08' LT.	160+08.02 22.08' LT.	160+21.92 22.08' LT.	160+35.82 22.08' LT.	160+49.72 22.08' LT.	160+63.61 22.08' LT.
		687.18'	687.26'	687.30'	687.30'	687.30'	687.26'	687.18'	687.05'	686.89'	686.68'
	GIRDER G4	159+66.45 11.58' LT.	159+79.85 11.58' LT.	159+93.26 11.58' LT.	159+94.58 11.58' LT.	160+06.67 11.58' LT.	160+20.07 11.58' LT.	160+33.48 11.58' LT.	160+46.88 11.58' LT.	160+60.29 11.58' LT.	160+73.70 11.58' LT.
		687.47'	687.51'	687.51'	687.51'	687.48'	687.40'	687.29'	687.13'	686.94'	686.71'
	TOE OF PARAPET	159+68.58 10.00' LT.	159+81.91 10.00' LT.	159+95.24 10.00' LT.	- -	160+08.58 10.00' LT.	160+21.91 10.00' LT.	160+35.24 10.00' LT.	160+48.57 10.00' LT.	160+61.90 10.00' LT.	160+75.23 10.00' LT.
		687.51'	687.55'	687.54'	-	687.50'	687.42'	687.30'	687.14'	686.95'	686.72'

*TOP OF SIDEWALK ELEVATIONS SHOWN

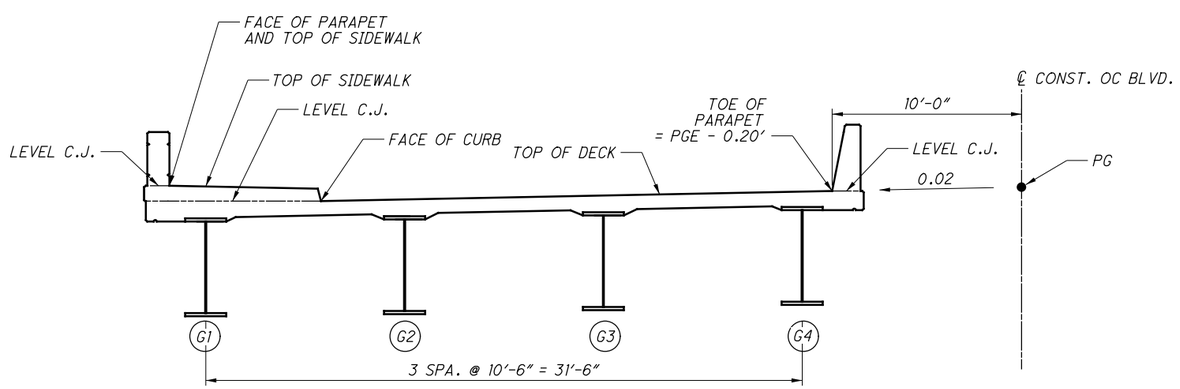

NOTES:

1. FINAL DECK SURFACE ELEVATIONS SHOWN REPRESENT THE DECK SURFACE LOCATION AFTER ALL ANTICIPATED DEAD LOAD DEFLECTIONS HAVE OCCURRED.
2. SCREED ELEVATIONS ARE GIVEN AT 1/8, 1/4, 3/8, 1/2, 5/8, 3/4, 7/8 ALONG ℄ OF EACH CURVED GIRDER AND ALONG THE ARC LENGTHS FOR FACE OF CURB, FACE OF PARAPET, AND TOE OF PARAPET.

NO.	DATE	DESCRIPTION
0	2019-03-13	RFC

ISSUE RECORD

DESIGN AGENCY
Michael Baker INTERNATIONAL
1111 SUPERIOR AVE E., SUITE 2300, CLEVELAND, OH 44114

DESIGNED	DRAWN	REVIEWED	DATE
EKW	EKW	JWB	3/01/19
CHECKED	REVISED	STRUCTURE FILE NUMBER	
MKB		1801517	

RECORD PLANS

FINAL DECK SURFACE ELEVATION TABLE

CUY-010-1976L
OH-10 WESTBOUND OVER GCRTA BLUE AND GREEN LINES

RECORD PLANS

CUY-IR490/SR010-2.09/19.28
PID No. 96833

RECORD PLANS

BU-19 - GCRTA BLUE/GREEN BRIDGES & CATENARY MODIFICATIONS
...\Sheets\010_1976L_SD507.dgn 6/27/2019 5:04:05 PM Christopher.Lemley

DECK SCREED SURFACE STATIONS, OFFSETS & ELEVATIONS

	ELEVATION LINE	℄ BRGS R.A.	1/8 SPAN	1/4 SPAN	3/8 SPAN	1/2 SPAN	5/8 SPAN	FIELD SPLICE 1	3/4 SPAN	7/8 SPAN	℄ BRGS PIER 1
SPAN 1	FACE OF PARAPET	- -	- -	- -	- -	- -	- -	- -	- -	- -	- -
		-	-	-	-	-	-	-	-	-	-
	GIRDER G1	156+26.55 43.08′ LT.	156+41.34 43.08′ LT.	156+56.14 43.08′ LT.	156+70.93 43.08′ LT.	156+85.73 43.08′ LT.	157+00.52 43.08′ LT.	157+08.84 43.08′ LT.	157+15.31 43.08′ LT.	157+30.11 43.08′ LT.	157+44.90 43.08′ LT.
		681.14′	681.47′	681.77′	682.05′	682.30′	682.54′	682.68′	682.78′	683.05′	683.33′
	FACE OF CURB	156+30.17 37.00′ LT.	156+45.42 37.00′ LT.	156+60.66 37.00′ LT.	156+75.91 37.00′ LT.	156+91.16 37.00′ LT.	157+06.41 37.00′ LT.	- -	157+21.65 37.00′ LT.	157+36.90 37.00′ LT.	157+52.15 37.00′ LT.
		681.21′	681.54′	681.86′	682.14′	682.41′	682.65′	-	682.91′	683.17′	683.47′
	GIRDER G2	156+32.81 32.58′ LT.	156+48.39 32.58′ LT.	156+63.97 32.58′ LT.	156+79.55 32.58′ LT.	156+95.13 32.58′ LT.	157+10.71 32.58′ LT.	157+20.12 32.58′ LT.	157+26.29 32.58′ LT.	157+41.87 32.58′ LT.	157+57.45 32.58′ LT.
		681.35′	681.69′	682.01′	682.30′	682.57′	682.82′	682.98′	683.08′	683.35′	683.66′
	GIRDER G3	156+39.14 22.08′ LT.	156+55.53 22.08′ LT.	156+71.91 22.08′ LT.	156+88.29 22.08′ LT.	157+04.68 22.08′ LT.	157+21.06 22.08′ LT.	157+30.77 22.08′ LT.	157+37.44 22.08′ LT.	157+53.83 22.08′ LT.	157+70.21 22.08′ LT.
		681.68′	682.04′	682.38′	682.69′	682.97′	683.24′	683.39′	683.50′	683.79′	684.10′
	GIRDER G4	156+45.55 11.58′ LT.	156+62.75 11.58′ LT.	156+79.96 11.58′ LT.	156+97.16 11.58′ LT.	157+14.37 11.58′ LT.	157+31.57 11.58′ LT.	157+44.93 11.58′ LT.	157+48.77 11.58′ LT.	157+65.98 11.58′ LT.	157+83.18 11.58′ LT.
		682.01′	682.40′	682.76′	683.09′	683.39′	683.66′	683.87′	683.93′	684.23′	684.55′
	TOE OF PARAPET	156+46.52 10.00′ LT.	156+63.85 10.00′ LT.	156+81.18 10.00′ LT.	156+98.51 10.00′ LT.	157+15.84 10.00′ LT.	157+33.17 10.00′ LT.	- -	157+50.50 10.00′ LT.	157+67.83 10.00′ LT.	157+85.16 10.00′ LT.
		682.06′	682.45′	682.82′	683.15′	683.45′	683.72′	-	684.00′	684.29′	684.62′

	ELEVATION LINE	℄ BRGS PIER 1	1/8 SPAN	FIELD SPLICE 2	1/4 SPAN	3/8 SPAN	1/2 SPAN	5/8 SPAN	3/4 SPAN	FIELD SPLICE 3	7/8 SPAN	℄ BRGS PIER 2
SPAN 2	FACE OF PARAPET	- -	- -	- -	- -	- -	- -	- -	- -	- -	- -	- -
		-	-	-	-	-	-	-	-	-	-	-
	GIRDER G1	157+44.90 43.08′ LT.	157+67.43 43.08′ LT.	157+72.00 43.08′ LT.	157+89.96 43.08′ LT.	158+12.49 43.08′ LT.	158+35.03 43.08′ LT.	158+57.56 43.08′ LT.	158+80.09 43.08′ LT.	159+01.34 43.08′ LT.	159+02.62 43.08′ LT.	159+25.15 43.08′ LT.
		683.33′	683.87′	683.98′	684.46′	685.04′	685.53′	685.90′	686.16′	686.38′	686.39′	686.60′
	FACE OF CURB	157+52.15 37.00′ LT.	157+74.75 37.00′ LT.	- -	157+97.35 37.00′ LT.	158+19.95 37.00′ LT.	158+42.55 37.00′ LT.	158+65.15 37.00′ LT.	158+87.75 37.00′ LT.	- -	159+10.35 37.00′ LT.	159+32.95 37.00′ LT.
		683.47′	684.01′	-	684.59′	685.15′	685.63′	686.00′	686.28′	-	686.52′	686.70′
	GIRDER G2	157+57.45 32.58′ LT.	157+80.11 32.58′ LT.	157+87.20 32.58′ LT.	158+02.76 32.58′ LT.	158+25.41 32.58′ LT.	158+48.06 32.58′ LT.	158+70.71 32.58′ LT.	158+93.37 32.58′ LT.	159+12.07 32.58′ LT.	159+16.02 32.58′ LT.	159+38.67 32.58′ LT.
		683.66′	684.19′	684.37′	684.77′	685.32′	685.79′	686.16′	686.45′	686.65′	686.68′	686.85′
	GIRDER G3	157+70.21 22.08′ LT.	157+92.99 22.08′ LT.	158+07.14 22.08′ LT.	158+15.77 22.08′ LT.	158+38.54 22.08′ LT.	158+61.32 22.08′ LT.	158+84.10 22.08′ LT.	159+06.88 22.08′ LT.	159+21.26 22.08′ LT.	159+29.66 22.08′ LT.	159+52.44 22.08′ LT.
		684.10′	684.63′	684.98′	685.20′	685.74′	686.21′	686.59′	686.89′	687.02′	687.07′	687.18′
	GIRDER G4	157+83.18 11.58′ LT.	158+06.09 11.58′ LT.	158+17.12 11.58′ LT.	158+29.00 11.58′ LT.	158+51.91 11.58′ LT.	158+74.82 11.58′ LT.	158+97.72 11.58′ LT.	159+20.63 11.58′ LT.	159+34.77 11.58′ LT.	159+43.54 11.58′ LT.	159+66.45 11.58′ LT.
		684.55′	685.08′	685.35′	685.64′	686.19′	686.67′	687.05′	687.31′	687.40′	687.43′	687.47′
	TOE OF PARAPET	157+85.16 10.00′ LT.	158+08.09 10.00′ LT.	- -	158+31.01 10.00′ LT.	158+53.94 10.00′ LT.	158+76.87 10.00′ LT.	158+99.80 10.00′ LT.	159+22.73 10.00′ LT.	- -	159+45.65 10.00′ LT.	159+68.58 10.00′ LT.
		684.62′	685.15′	-	685.71′	686.26′	686.74′	687.12′	687.37′	-	687.48′	687.51′

	ELEVATION LINE	℄ BRGS PIER 2	1/8 SPAN	1/4 SPAN	FIELD SPLICE 4	3/8 SPAN	1/2 SPAN	5/8 SPAN	3/4 SPAN	7/8 SPAN	℄ BRGS F.A.
SPAN 3	FACE OF PARAPET	- -	- -	- -	- -	- -	- -	- -	- -	- -	- -
		-	-	-	-	-	-	-	-	-	-
	GIRDER G1	159+25.15 43.08′ LT.	159+39.99 43.08′ LT.	159+54.83 43.08′ LT.	159+55.48 43.08′ LT.	159+69.67 43.08′ LT.	159+84.50 43.08′ LT.	159+99.34 43.08′ LT.	160+14.18 43.08′ LT.	160+29.02 43.08′ LT.	160+43.86 43.08′ LT.
		686.60′	686.74′	686.87′	686.87′	686.97′	687.04′	687.04′	686.98′	686.85′	686.66′
	FACE OF CURB	159+32.95 37.00′ LT.	159+47.53 37.00′ LT.	159+62.10 37.00′ LT.	- -	159+76.67 37.00′ LT.	159+91.24 37.00′ LT.	160+05.81 37.00′ LT.	160+20.38 37.00′ LT.	160+34.96 37.00′ LT.	160+49.53 37.00′ LT.
		686.70′	686.82′	686.92′	-	686.99′	687.03′	687.01′	686.93′	686.79′	686.59′
	GIRDER G2	159+38.67 32.58′ LT.	159+53.05 32.58′ LT.	159+67.42 32.58′ LT.	159+72.40 32.58′ LT.	159+81.80 32.58′ LT.	159+96.17 32.58′ LT.	160+10.55 32.58′ LT.	160+24.92 32.58′ LT.	160+39.30 32.58′ LT.	160+53.67 32.58′ LT.
		686.85′	686.95′	687.03′	687.06′	687.08′	687.10′	687.07′	686.98′	686.83′	686.62′
	GIRDER G3	159+52.44 22.08′ LT.	159+66.33 22.08′ LT.	159+80.23 22.08′ LT.	159+82.39 22.08′ LT.	159+94.13 22.08′ LT.	160+08.02 22.08′ LT.	160+21.92 22.08′ LT.	160+35.82 22.08′ LT.	160+49.72 22.08′ LT.	160+63.61 22.08′ LT.
		687.18′	687.24′	687.27′	687.28′	687.28′	687.26′	687.19′	687.07′	686.90′	686.68′
	GIRDER G4	159+66.45 11.58′ LT.	159+79.85 11.58′ LT.	159+93.26 11.58′ LT.	159+94.58 11.58′ LT.	160+06.67 11.58′ LT.	160+20.07 11.58′ LT.	160+33.48 11.58′ LT.	160+46.88 11.58′ LT.	160+60.29 11.58′ LT.	160+73.70 11.58′ LT.
		687.47′	687.49′	687.48′	687.48′	687.46′	687.40′	687.30′	687.16′	686.96′	686.71′
	TOE OF PARAPET	159+68.58 10.00′ LT.	159+81.91 10.00′ LT.	159+95.24 10.00′ LT.	- -	160+08.58 10.00′ LT.	160+21.91 10.00′ LT.	160+35.24 10.00′ LT.	160+48.57 10.00′ LT.	160+61.90 10.00′ LT.	160+75.23 10.00′ LT.
		687.51′	687.52′	687.51′	-	687.48′	687.42′	687.32′	687.17′	686.97′	686.72′

NOTES:

1. SCREED ELEVATIONS SHOWN REPRESENT THE THEORETICAL DECK SURFACE LOCATION PRIOR TO DEFLECTIONS CAUSED BY DECK PLACEMENT AND OTHER ANTICIPATED DEAD LOADS.
2. SEE SHEET 28/46 FOR DECK ELEVATION SCHEMATICS.
3. SCREED ELEVATIONS INCLUDE THE CONCRETE DEAD LOAD DEFLECTION TO ACCOUNT FOR THE ADDITIONAL PERMANENT DEAD LOADS ASSOCIATED WITH CONCRETE FILLED STAY IN PLACE FORMS.

NO.	DATE	DESCRIPTION
0	2019-03-13	RFC

ISSUE RECORD

DESIGN AGENCY
Michael Baker INTERNATIONAL
1111 SUPERIOR AVE E., SUITE 2300, CLEVELAND, OH 44114

DESIGNED	DRAWN	REVIEWED	DATE
EKW	EKW	JWB	3/01/19
CHECKED	REVISED	STRUCTURE FILE NUMBER	
MKB		1801517	

RECORD PLANS

DECK SCREED ELEVATION TABLE
CUY-010-1976L
OH-10 WESTBOUND OVER GCRTA BLUE AND GREEN LINES

RECORD PLANS

CUY-IR490/SR010-2.09/19.28
PID No. 96833

RECORD PLANS

BU-19 - GCRTA BLUE/GREEN BRIDGES & CATENARY MODIFICATIONS
...\Sheets\010_1976L_SD508.dgn 6/27/2019 5:04:12 PM Christopher.Lemley

TOP OF HAUNCH STATIONS, OFFSETS & ELEVATIONS

SPAN 1	ELEVATION	℄ BRGS R.A.		1/8 SPAN		1/4 SPAN		3/8 SPAN		1/2 SPAN		5/8 SPAN		FIELD SPLICE 1		3/4 SPAN		7/8 SPAN		℄ BRGS PIER 1			
	GIRDER G1	156+26.55	43.08′ LT.	156+41.34	43.08′ LT.	156+56.14	43.08′ LT.	156+70.93	43.08′ LT.	156+85.73	43.08′ LT.	157+00.52	43.08′ LT.	157+08.84	43.08′ LT.	157+15.31	43.08′ LT.	157+30.11	43.08′ LT.	157+44.90	43.08′ LT.		
		680.39′		680.72′		681.02′		681.30′		681.55′		681.79′		681.93′		682.03′		682.30′		682.58′			
	GIRDER G2	156+32.81	32.58′ LT.	156+48.39	32.58′ LT.	156+63.97	32.58′ LT.	156+79.55	32.58′ LT.	156+95.13	32.58′ LT.	157+10.71	32.58′ LT.	157+20.12	32.58′ LT.	157+26.29	32.58′ LT.	157+41.87	32.58′ LT.	157+57.45	32.58′ LT.		
		680.60′		680.94′		681.26′		681.55′		681.82′		682.07′		682.23′		682.33′		682.60′		682.91′			
	GIRDER G3	156+39.14	22.08′ LT.	156+55.53	22.08′ LT.	156+71.91	22.08′ LT.	156+88.29	22.08′ LT.	157+04.68	22.08′ LT.	157+21.06	22.08′ LT.	157+30.77	22.08′ LT.	157+37.44	22.08′ LT.	157+53.83	22.08′ LT.	157+70.21	22.08′ LT.		
		680.93′		681.29′		681.63′		681.94′		682.22′		682.49′		682.64′		682.75′		683.04′		683.35′			
	GIRDER G4	156+45.55	11.58′ LT.	156+62.75	11.58′ LT.	156+79.96	11.58′ LT.	156+97.16	11.58′ LT.	157+14.37	11.58′ LT.	157+31.57	11.58′ LT.	157+44.93	11.58′ LT.	157+48.77	11.58′ LT.	157+65.98	11.58′ LT.	157+83.18	11.58′ LT.		
		681.26′		681.65′		682.01′		682.34′		682.64′		682.91′		683.12′		683.18′		683.48′		683.80′			
SPAN 2	ELEVATION	℄ BRGS PIER 1		1/8 SPAN		FIELD SPLICE 2		1/4 SPAN		3/8 SPAN		1/2 SPAN		5/8 SPAN		3/4 SPAN		FIELD SPLICE 3		7/8 SPAN		℄ BRGS PIER 2	
	GIRDER G1	157+44.90	43.08′ LT.	157+67.43	43.08′ LT.	157+72.00	43.08′ LT.	157+89.96	43.08′ LT.	158+12.49	43.08′ LT.	158+35.03	43.08′ LT.	158+57.56	43.08′ LT.	158+80.09	43.08′ LT.	159+01.34	43.08′ LT.	159+02.62	43.08′ LT.	159+25.15	43.08′ LT.
		682.58′		683.12′		683.23′		683.71′		684.29′		684.78′		685.15′		685.41′		685.63′		685.64′		685.85′	
	GIRDER G2	157+57.45	32.58′ LT.	157+80.11	32.58′ LT.	157+87.20	32.58′ LT.	158+02.76	32.58′ LT.	158+25.41	32.58′ LT.	158+48.06	32.58′ LT.	158+70.71	32.58′ LT.	158+93.37	32.58′ LT.	159+12.07	32.58′ LT.	159+16.02	32.58′ LT.	159+38.67	32.58′ LT.
		682.91′		683.44′		683.62′		684.02′		684.57′		685.04′		685.41′		685.70′		685.90′		685.93′		686.10′	
	GIRDER G3	157+70.21	22.08′ LT.	157+92.99	22.08′ LT.	158+07.14	22.08′ LT.	158+15.77	22.08′ LT.	158+38.54	22.08′ LT.	158+61.32	22.08′ LT.	158+84.10	22.08′ LT.	159+06.88	22.08′ LT.	159+21.26	22.08′ LT.	159+29.66	22.08′ LT.	159+52.44	22.08′ LT.
		683.35′		683.88′		684.23′		684.45′		684.99′		685.46′		685.84′		686.14′		686.27′		686.32′		686.43′	
	GIRDER G4	157+83.18	11.58′ LT.	158+06.09	11.58′ LT.	158+17.12	11.58′ LT.	158+29.00	11.58′ LT.	158+51.91	11.58′ LT.	158+74.82	11.58′ LT.	158+97.72	11.58′ LT.	159+20.63	11.58′ LT.	159+34.77	11.58′ LT.	159+43.54	11.58′ LT.	159+66.45	11.58′ LT.
		683.80′		684.33′		684.60′		684.89′		685.44′		685.92′		686.30′		686.56′		686.65′		686.68′		686.72′	
SPAN 3	ELEVATION	℄ BRGS PIER 2		1/8 SPAN		1/4 SPAN		FIELD SPLICE 4		3/8 SPAN		1/2 SPAN		5/8 SPAN		3/4 SPAN		7/8 SPAN		℄ BRGS F.A.			
	GIRDER G1	159+25.15	43.08′ LT.	159+39.99	43.08′ LT.	159+54.83	43.08′ LT.	159+55.48	43.08′ LT.	159+69.67	43.08′ LT.	159+84.50	43.08′ LT.	159+99.34	43.08′ LT.	160+14.18	43.08′ LT.	160+29.02	43.08′ LT.	160+43.86	43.08′ LT.		
		685.85′		685.99′		686.12′		686.12′		686.22′		686.29′		686.29′		686.23′		686.10′		685.91′			
	GIRDER G2	159+38.67	32.58′ LT.	159+53.05	32.58′ LT.	159+67.42	32.58′ LT.	159+72.40	32.58′ LT.	159+81.80	32.58′ LT.	159+96.17	32.58′ LT.	160+10.55	32.58′ LT.	160+24.92	32.58′ LT.	160+39.30	32.58′ LT.	160+53.67	32.58′ LT.		
		686.10′		686.20′		686.28′		686.31′		686.33′		686.35′		686.32′		686.23′		686.08′		685.87′			
	GIRDER G3	159+52.44	22.08′ LT.	159+66.33	22.08′ LT.	159+80.23	22.08′ LT.	159+82.39	22.08′ LT.	159+94.13	22.08′ LT.	160+08.02	22.08′ LT.	160+21.92	22.08′ LT.	160+35.82	22.08′ LT.	160+49.72	22.08′ LT.	160+63.61	22.08′ LT.		
		686.43′		686.49′		686.52′		686.53′		686.53′		686.51′		686.44′		686.32′		686.15′		685.93′			
	GIRDER G4	159+66.45	11.58′ LT.	159+79.85	11.58′ LT.	159+93.26	11.58′ LT.	159+94.58	11.58′ LT.	160+06.67	11.58′ LT.	160+20.07	11.58′ LT.	160+33.48	11.58′ LT.	160+46.88	11.58′ LT.	160+60.29	11.58′ LT.	160+73.70	11.58′ LT.		
		686.72′		686.74′		686.73′		686.73′		686.71′		686.65′		686.55′		686.41′		686.21′		685.96′			

NOTE:

INSTALL SUPPLEMENTAL HAUNCH REINFORCEMENT AT FOLLOWING LOCATIONS MATCHING SPACING OF LOWER TRANSVERSE DECK REINFORCEMENT:

GIRDER 1: BETWEEN FS 2 AND FS 3, S558 BAR
SPAN 3: FROM 5/8 SPAN TO FWD ABUTMENT, S557 BAR

GIRDER 2: BETWEEN FS 2 AND FS 3, S558 BAR
SPAN 3: FROM 7/8 SPAN TO FWD ABUTMENT, S557 BAR

GIRDER 3: BETWEEN FS 2 AND FS 3, S558 BAR

GIRDER 4: BETWEEN FS 2 AND FS 3, S558 BAR
SPAN 3: FROM 5/8 SPAN TO FWD ABUTMENT, S557 BAR

S557 = TYPE 21
A=20″
B=9″
C=24″
D=6.25″

S558 = TYPE 6
A=17″
B=6.25″
C=24″

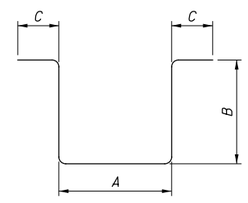

TYPE-6

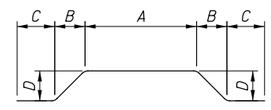

TYPE-21

NOTES:

1. TOP OF HAUNCH ELEVATIONS SHOWN REPRESENT THE THEORETICAL DECK SURFACE LOCATION OF THE BOTTOM OF THE DECK ABOVE THE BEAM/GIRDER HAUNCH PRIOR TO DEFLECTIONS CAUSED BY DECK PLACEMENT AND OTHER ANTICIPATED DEAD LOADS.

2. SEE SHEET 28/46 FOR DECK ELEVATION SCHEMATICS.

NO.	DATE	DESCRIPTION
1	2024-09-10	RECORD DRAWINGS
0	2019-03-13	RFC

ISSUE RECORD

BU-19 - GCRTA BLUE/GREEN BRIDGES & CATENARY MODIFICATIONS
...\Sheets\010_1976L_SD509.dgn 11/21/2024 4:48:12 PM Rohit.Bk

DESIGN AGENCY
Michael Baker INTERNATIONAL
1111 SUPERIOR AVE E., SUITE 2300, CLEVELAND, OH 44114

DESIGNED	DRAWN	REVIEWED	DATE
EKW	EKW	JWB	3/01/19
CHECKED	REVISED	STRUCTURE FILE NUMBER	
MKB		1801517	

RECORD PLANS

TOP OF HAUNCH ELEVATION TABLE
CUY-010-1976L
OH-10 WESTBOUND OVER GCRTA BLUE AND GREEN LINES

RECORD PLANS

CUY-IR490/SR010-2.09/19.28
PID No. 96833

RECORD PLANS

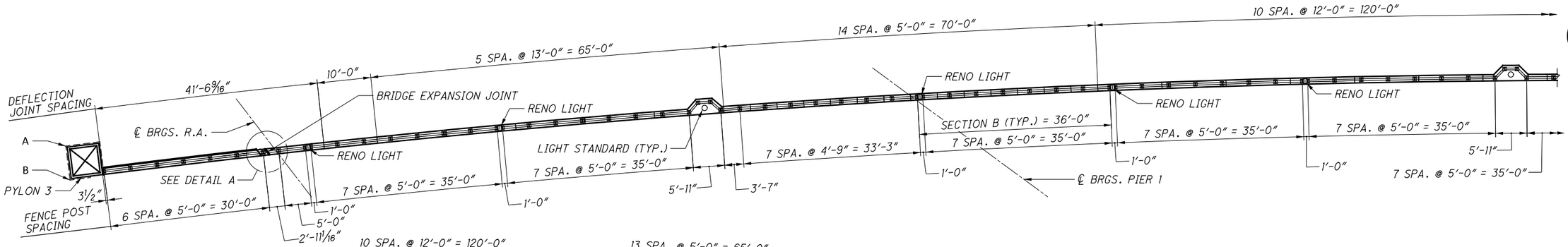

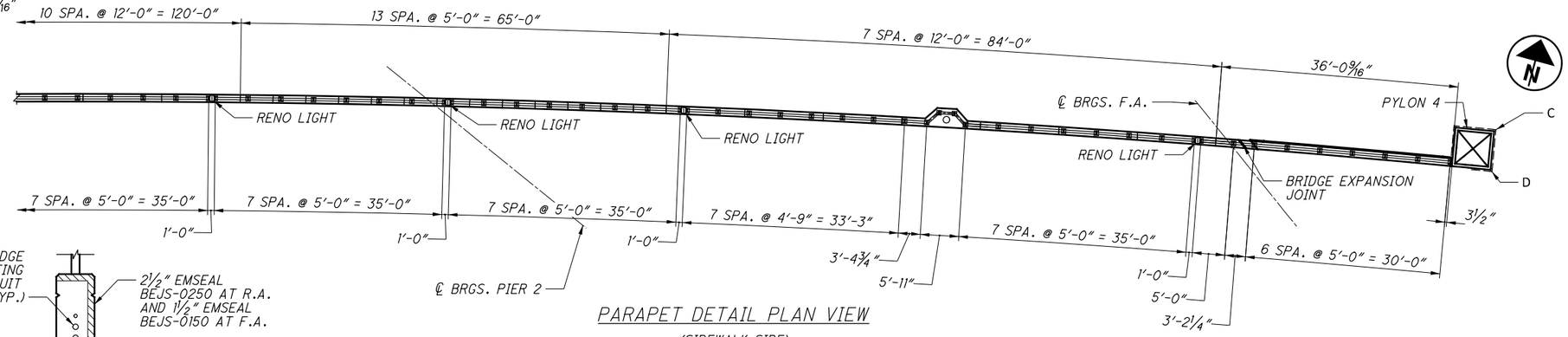

PARAPET DETAIL PLAN VIEW

(SIDEWALK SIDE)

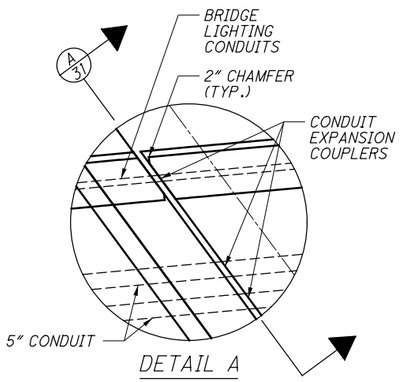

DETAIL A

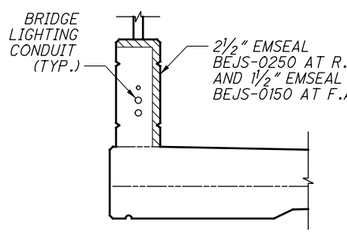

A 31 SECTION

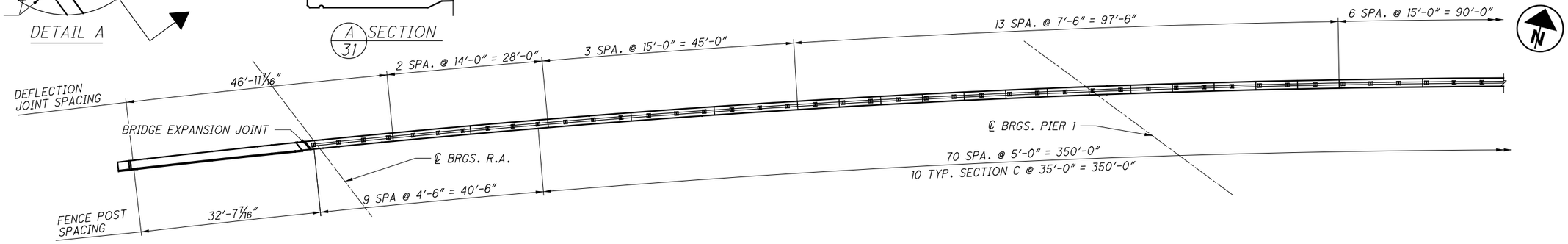

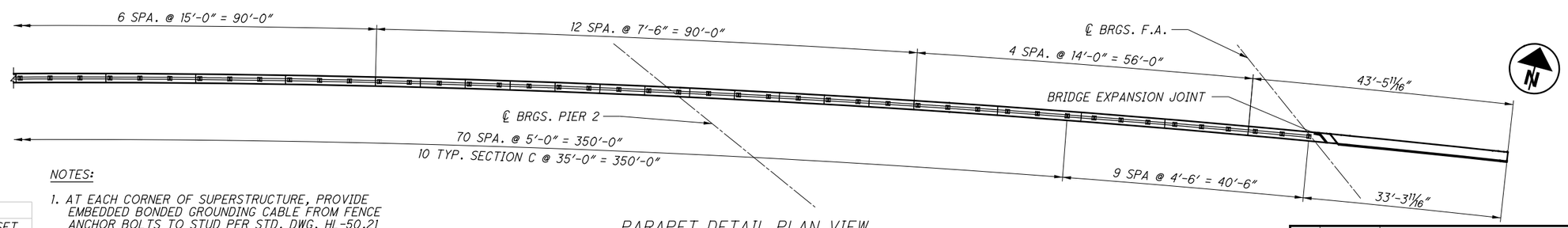

PARAPET DETAIL PLAN VIEW

(ROAD SIDE)

NOTES:

1. AT EACH CORNER OF SUPERSTRUCTURE, PROVIDE EMBEDDED BONDED GROUNDING CABLE FROM FENCE ANCHOR BOLTS TO STUD PER STD. DWG. HL-50.21 PROVIDE EMBEDDED BONDED GROUNDING JUMPERS ACROSS ALL DISCONTINUOUS SECTIONS OF FENCE ON THE SUPERSTRUCTURE. PROVIDE BONDED GROUNDING JUMPERS ON THE EXTERIOR SIDE OF THE FENCE ACROSS ALL OPEN GAPS AT ABUTMENT EXPANSION JOINTS
2. DEAD END CONNECTIONS SHALL BE PLACED AT LEAST EVERY OTHER FENCE POST.

PYLON LOCATIONS

	STATION	OFFSET
A	155+86.99	51.18 LT
B	155+86.97	44.76 LT
C	160+80.98	51.18 LT
D	160+80.99	44.76 LT

* - MEASURED TO CORNER OF FOUNDATION

NO.	DATE	DESCRIPTION
0	2019-03-13	RFC

ISSUE RECORD

DESIGN AGENCY
Michael Baker INTERNATIONAL
1111 SUPERIOR AVE E. SUITE 2300, CLEVELAND, OH 44114

DESIGNED	DRAWN	REVIEWED	DATE
GMC	GMC	JWB	3/01/19
CHECKED	REVISED	STRUCTURE FILE NUMBER	
CDC		1801517	

RECORD PLANS

PARAPET DETAILS (1 OF 7)
CUY-010-1976L
OH-10 WESTBOUND OVER GCRTA BLUE AND GREEN LINES

RECORD PLANS

CUY-IR490/SR010-2.09/19.28
PID No. 96833

RECORD PLANS

BU-19 - GCRTA BLUE/GREEN BRIDGES & CATENARY MODIFICATIONS
...\Sheets\010_1976L_SA506.dgn 6/27/2019 5:04:22 PM Christopher.Lemley

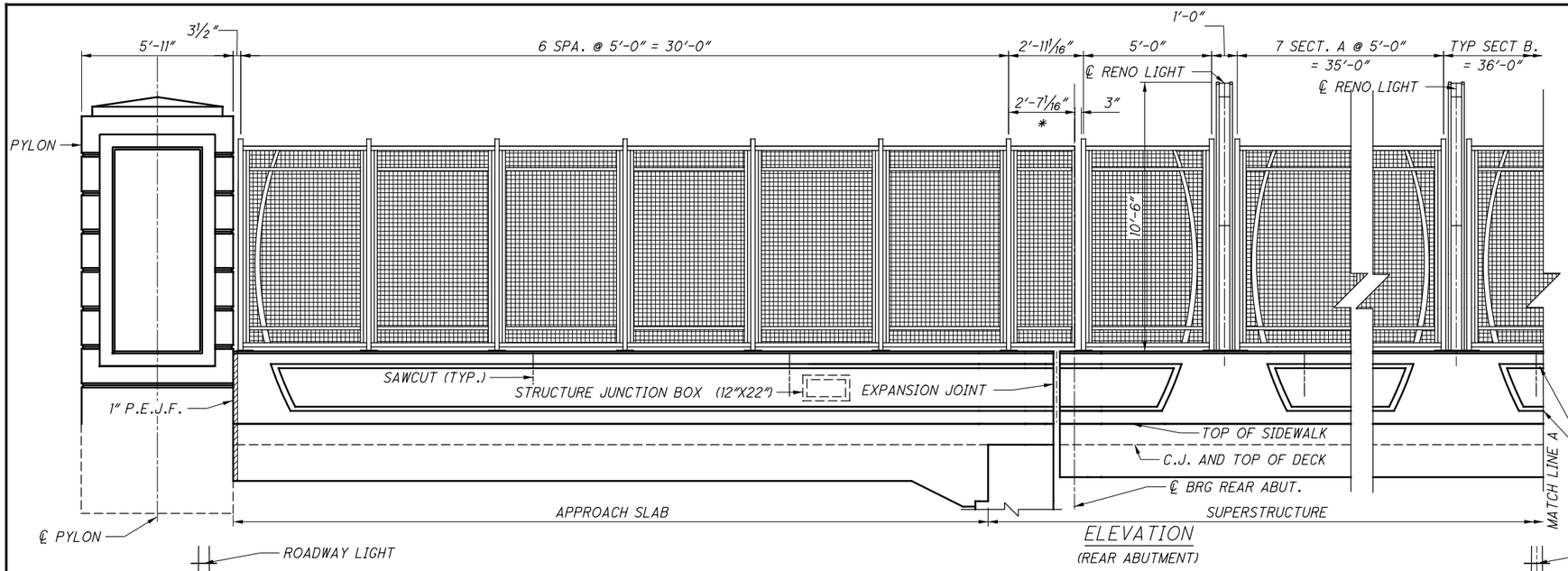

ELEVATION

(REAR ABUTMENT)

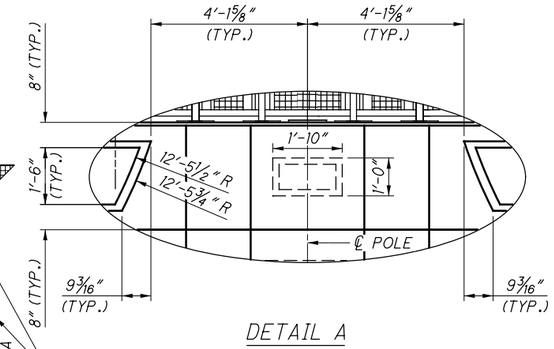

DETAIL A

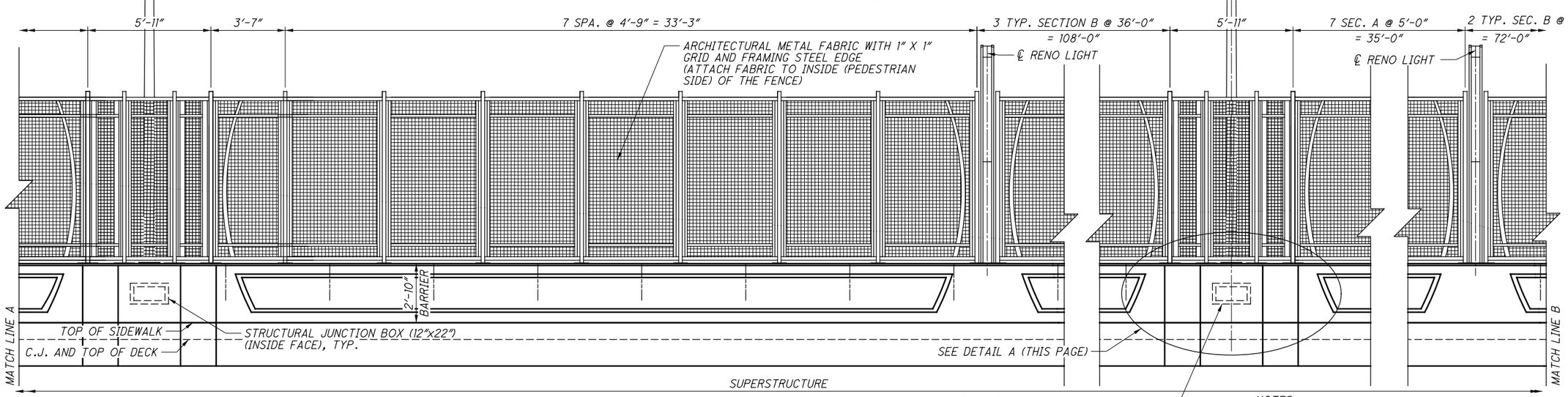

ELEVATION

(OUTSIDE FACE OF SIDEWALK PARAPET)

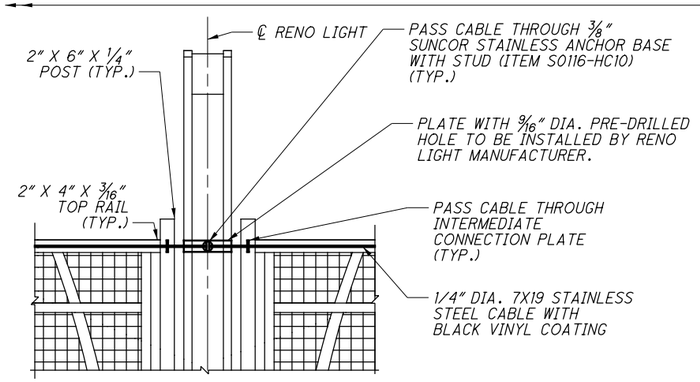

CABLE SYSTEM CONNECTION AT INTERMEDIATE RENO LIGHTS

(TOP SHOWN, BOTTOM SIMILAR)

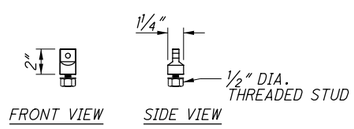

ANCHOR BASE WITH STUD DIAGRAM

(3/8" NOMINAL SIZE (SUNCOR STAINLESS ITEM S0116-HC10)

NOTES:

1. FOR ADDITIONAL RAILING SAWCUT DETAILS, SEE ODOT STANDARD DRAWING BR-2-15
2. FOR SAWCUT SPACING, SEE PLAN SHEET (31 / 46)
3. FOR PYLON DETAILS, SEE SHEET (41 / 46)
4. FOR REINFORCING SCHEDULE, SEE SHEET (45 / 46)
5. RENO LIGHT COLUMNS ARE BY HESSAMERICA, PRODUCT CODE: REN3200-LED-2-10RB-GG OR APPROVED EQUAL. CONDUIT SHALL BE EMBEDDED AND NOT VISIBLE.
6. FOR ADDITIONAL DETAILS NOT LABELED, SEE PLAN SHEET (31 / 46)

LEGEND

* - PORTION OF RAILING IS TO BE CANTILEVERED OVER EXPANSION JOINT

NO.	DATE	DESCRIPTION
0	2019-03-13	RFC

ISSUE RECORD

DESIGN AGENCY
Michael Baker INTERNATIONAL
1111 SUPERIOR AVE E., SUITE 2300, CLEVELAND, OH 44114

DESIGNED	DRAWN	REVIEWED	DATE
GMC	GMC	JWB	3/01/19
CHECKED	REVISED	STRUCTURE FILE NUMBER	
CDC		1801517	

RECORD PLANS

PARAPET DETAILS (2 OF 7)

CUY-010-1976L

OH-10 WESTBOUND OVER GCRTA BLUE AND GREEN LINES

RECORD PLANS

CUY-IR490/SR010-2.09/19.28

PID No. 96833

RECORD PLANS

BU-19 - GCRTA BLUE/GREEN BRIDGES & CATENARY MODIFICATIONS

...\Sheets\010_1976L_SA502.dgn 6/27/2019 5:04:29 PM Christopher.Lemley

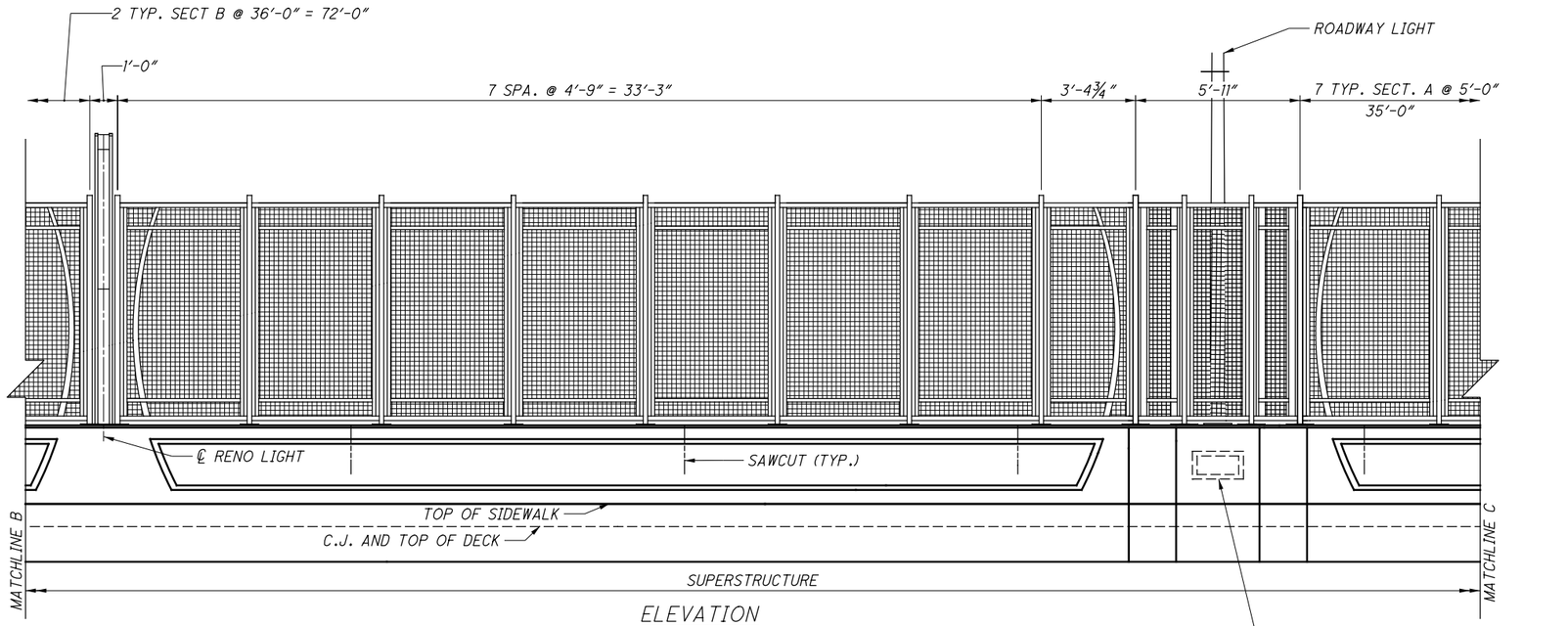

ELEVATION

(CONTINUED OUTSIDE FACE OF SIDEWALK PARAPET)

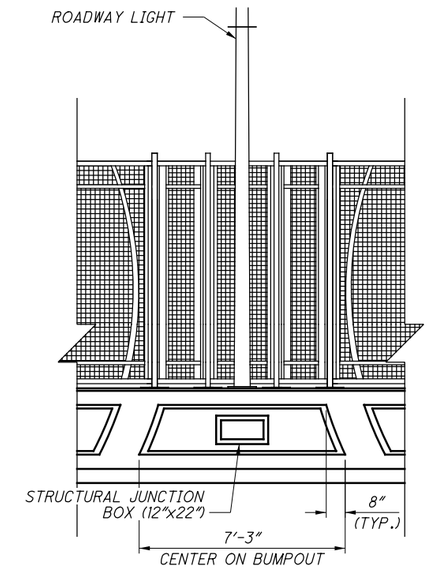

ROADWAY LIGHT PARAPET DETAIL

(INSIDE FACE OF PARAPET)

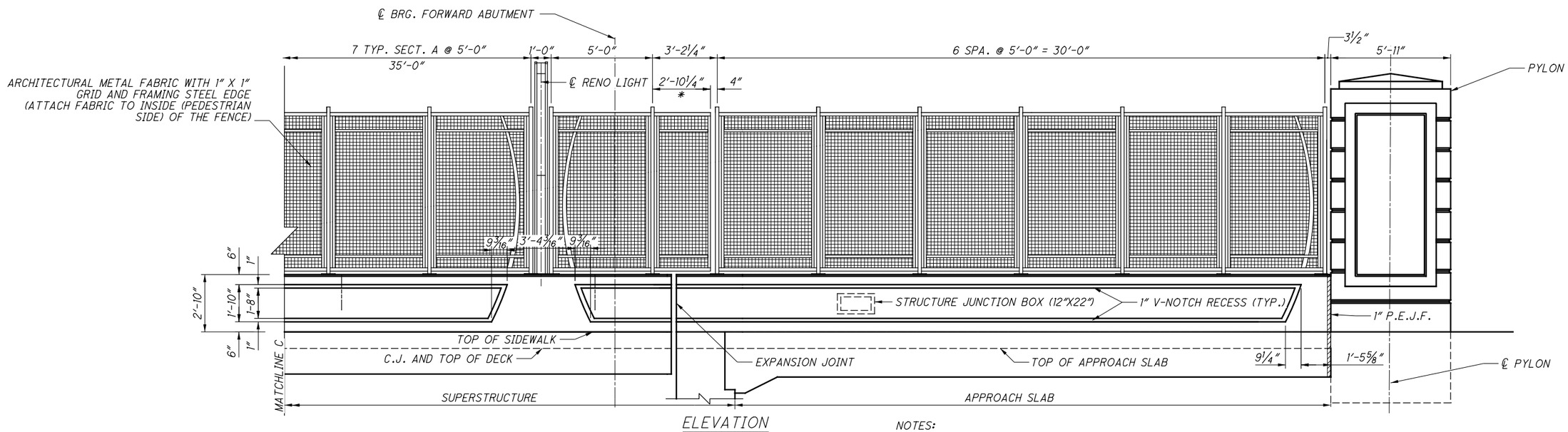

ELEVATION

(CONTINUED OUTSIDE FACE OF SIDEWALK PARAPET)

NOTES:

1. FOR ADDITIONAL RAILING SAWCUT DETAILS, SEE ODOT STANDARD DRAWING BR-2-15
2. FOR SAWCUT SPACING, SEE PLAN SHEET (31 / 46)
3. FOR PYLON DETAILS, SEE SHEET (41 / 46)
4. FOR REINFORCING SCHEDULE, SEE SHEET (45/46)
5. RENO LIGHT COLUMNS ARE BY HESSAMERICA, PRODUCT CODE: REN3200-LED-2-10RB-GG OR APPROVED EQUAL. CONDUIT SHALL BE EMBEDDED AND NOT VISIBLE.
6. FOR ADDITIONAL DETAILS NOT LABELED, SEE PLAN SHEET (31 / 46)

LEGEND

* - PORTION OF RAILING IS TO BE CANTILEVERED OVER EXPANSION JOINT

NO.	DATE	DESCRIPTION
1	2019-05-17	DC006
0	2019-03-13	RFC

ISSUE RECORD

DESIGN AGENCY
Michael Baker INTERNATIONAL
1111 SUPERIOR AVE E., SUITE 2300, CLEVELAND, OH 44114

DESIGNED	DRAWN	REVIEWED	DATE
GMC	GMC	JWB	3/01/19
CHECKED	REVISED	STRUCTURE FILE NUMBER	
CDC		1801517	

RECORD PLANS

PARAPET DETAILS (3 OF 7)
CUY-010-1976L
OH-10 WESTBOUND OVER GCRTA BLUE AND GREEN LINES

RECORD PLANS

CUY-IR490/SR010-2.09/19.28
PID No. 96833

BU-19 - GCRTA BLUE/GREEN BRIDGES & CATENARY MODIFICATIONS
...\Sheets\010_1976L_SA503.dgn 6/27/2019 5:04:35 PM Christopher.Lemley

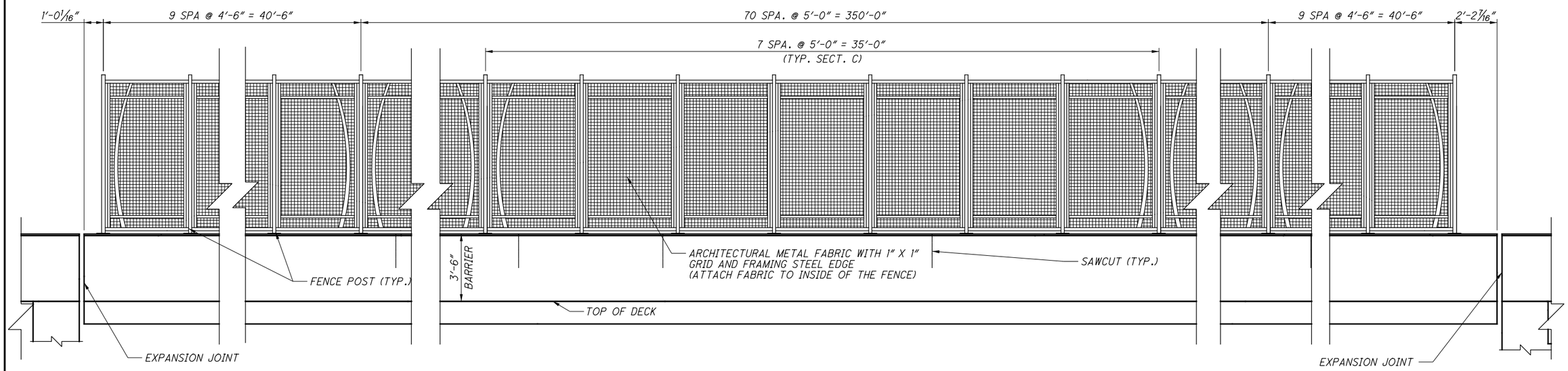

ELEVATION
(ROAD SIDE)

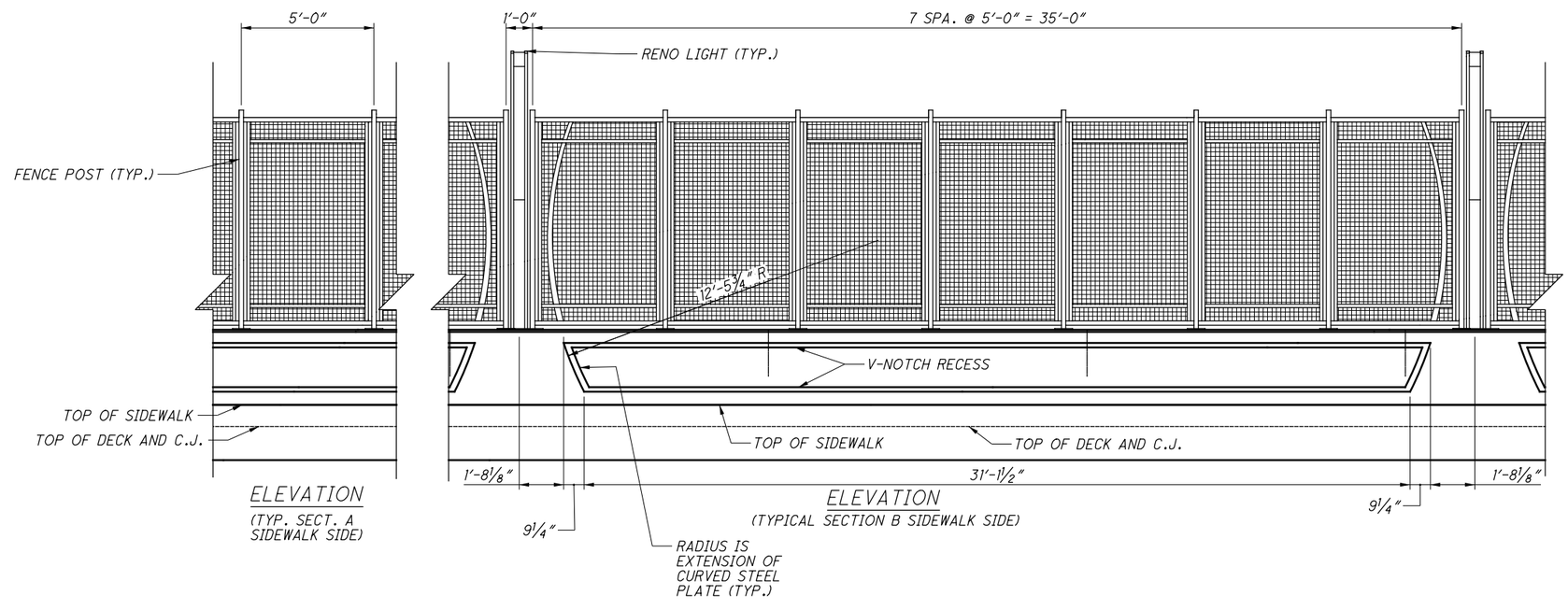

ELEVATION
(TYP. SECT. A
SIDEWALK SIDE)

ELEVATION
(TYPICAL SECTION B SIDEWALK SIDE)

NOTES:

1. FOR ADDITIONAL RAILING SAWCUT DETAILS, SEE ODOT STANDARD DRAWING BR-2-15
2. FOR SAWCUT SPACING, SEE PLAN SHEET (31 / 46)
3. FOR REINFORCING SCHEDULE, SEE SHEET (45 / 46)
4. FOR ADDITIONAL DETAILS NOT LABELED, SEE PLAN SHEET (31 / 46)

NO.	DATE	DESCRIPTION
0	2019-03-13	RFC

ISSUE RECORD

DESIGN AGENCY
Michael Baker INTERNATIONAL
1111 SUPERIOR AVE E., SUITE 2300, CLEVELAND, OH 44114

DESIGNED	DRAWN	REVIEWED	DATE
GMC	GMC	JWB	3/01/19
CHECKED	REVISED	STRUCTURE FILE NUMBER	
CDC		1801517	

RECORD PLANS

PARAPET DETAILS (4 OF 7)
CUY-010-1976L
OH-10 WESTBOUND OVER GCRTA BLUE AND GREEN LINES

RECORD PLANS

CUY-IR490/SR010-2.09/19.28
PID No. 96833

BU-19 - GCRTA BLUE/GREEN BRIDGES & CATENARY MODIFICATIONS
...\Sheets\010_1976L_SA507.dgn 6/27/2019 5:04:42 PM Christopher.Lemley

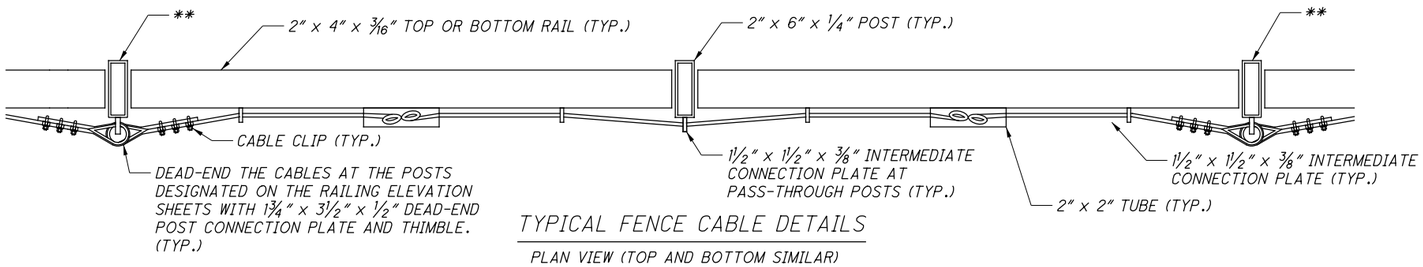

TYPICAL FENCE CABLE DETAILS

PLAN VIEW (TOP AND BOTTOM SIMILAR)

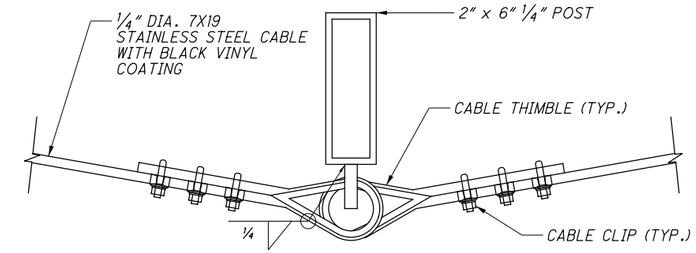

TYPICAL DEAD-END CONNECTION POST CONNECTION

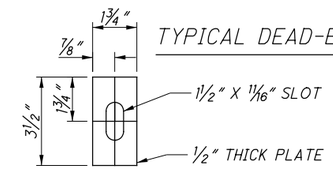

DEAD-END CONNECTION PLATE DETAIL

PROVIDE 1/8" CHAMFER ON PROJECTING CORNERS OF PLATE

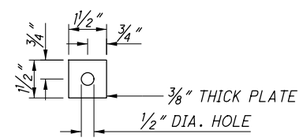

INTERMEDIATE CONNECTION PLATE DETAIL

PROVIDE 1/8" CHAMFER ON PROJECTING CORNERS OF PLATE

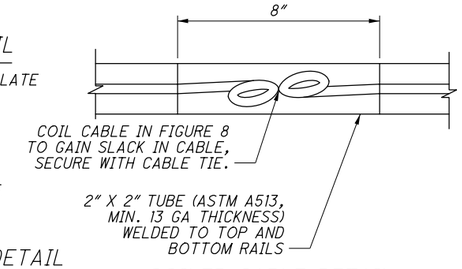

COILED CABLE DETAIL

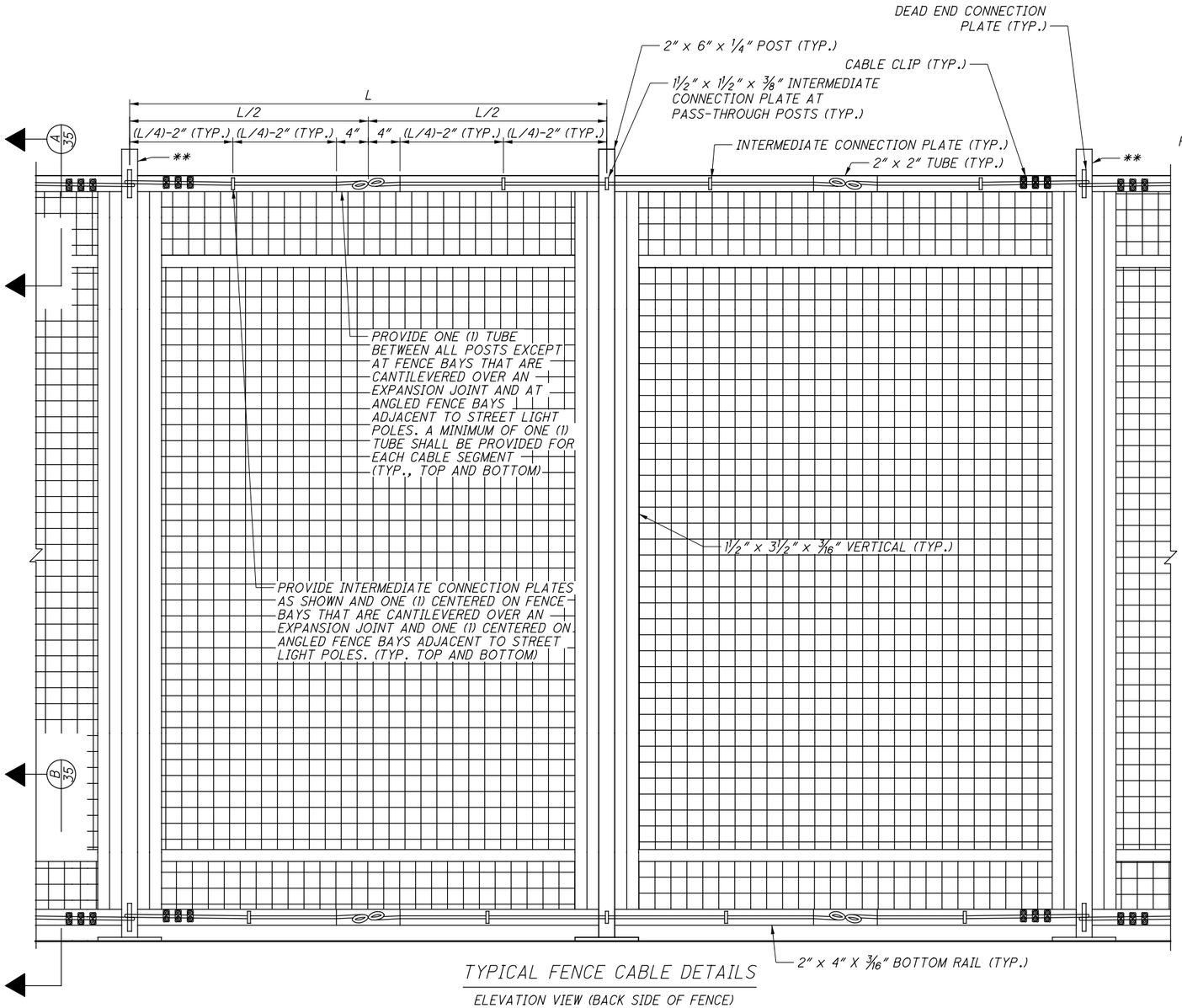

TYPICAL FENCE CABLE DETAILS

ELEVATION VIEW (BACK SIDE OF FENCE)

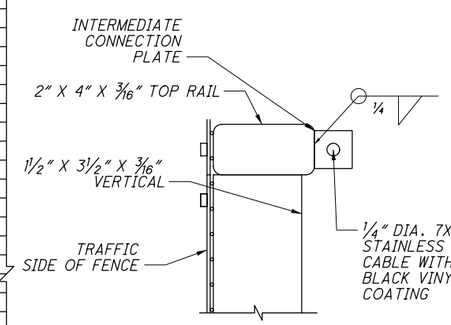

A 35 SECTION

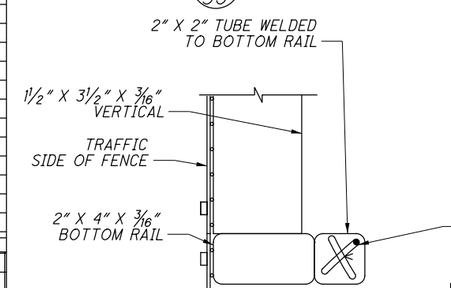

B 35 SECTION

NOTES:

1. PROVIDE 1/4" DIA. 7x19 304 STAINLESS STEEL AIRCRAFT CABLE WITH BLACK VINYL COATING TO 5/16" FINAL THICKNESS (PART #2S9250 AS MANUFACTURED BY FEHR BROS. INDUSTRIES INC.). INSTALL THE CABLE TO BE SNUG TIGHT WITHOUT SAG AND HAVING A TIGHT FIT OF CABLE COIL WITHIN THE 2" X 2" TUBING.
2. PROVIDE AND INSTALL 1/4" 304 STAINLESS STEEL CABLE CLIPS AND 5/16" 304 STAINLESS STEEL STANDARD DUTY CABLE THIMBLES (PART #SWRC250 AND PART #STH312SD, RESPECTIVELY, AS MANUFACTURED BY FEHR BROS. INDUSTRIES INC.) PER THE MANUFACTURER'S INSTRUCTIONS. REMOVE THE CABLE'S VINYL COATING AT CABLE CLIP LOCATIONS. FIELD PAINT ALL UNCOATED HARDWARE AND EXPOSED CABLE BLACK TO MATCH FENCE.
3. FOR WIRE CONNECTION DETAILS AT RENO LIGHTS, SEE SHEET 32/46.
4. DEAD END CONNECTIONS SHALL BE PLACED AT LEAST EVERY OTHER FENCE POST

LEGEND:

** - POST REQUIRING DEAD END CABLE CONNECTION

NO.	DATE	DESCRIPTION
0	2019-03-13	RFC

ISSUE RECORD

DESIGN AGENCY
Michael Baker INTERNATIONAL
1111 SUPERIOR AVE E., SUITE 2300, CLEVELAND, OH 44114

DESIGNED	DRAWN	REVIEWED	DATE
GMC	GMC	JWB	3/01/19
CHECKED	REVISED	STRUCTURE FILE NUMBER	
CDC		1801517	

RECORD PLANS

PARAPET DETAILS (5 OF 7)
CUY-010-1976L
OH-10 WESTBOUND OVER GCRTA BLUE AND GREEN LINES

RECORD PLANS

CUY-IR490/SR010-2.09/19.28
PID No. 96833

BU-19 - GCRTA BLUE/GREEN BRIDGES & CATENARY MODIFICATIONS
...\Sheets\010_1976L_SA504.dgn 6/27/2019 5:04:47 PM Christopher Lemley

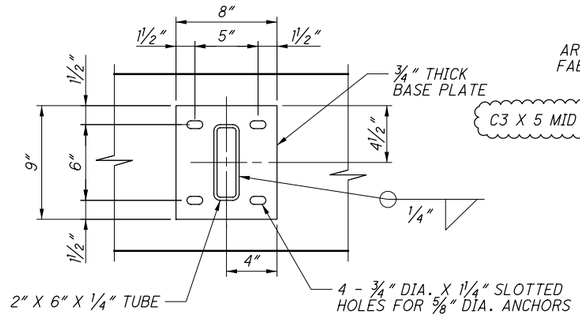

TYPICAL MID-POST BASE PLATE DETAIL

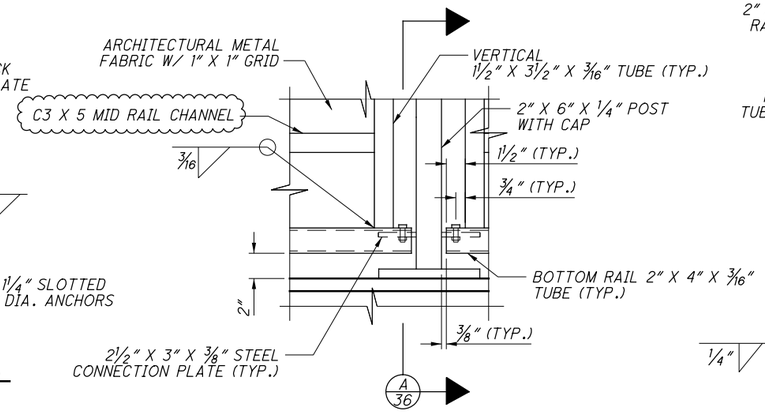

DETAIL 1 (37/46)

(FENCE FABRIC FASTENERS NOT SHOWN)

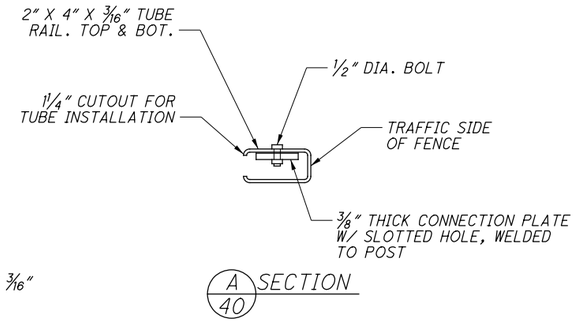

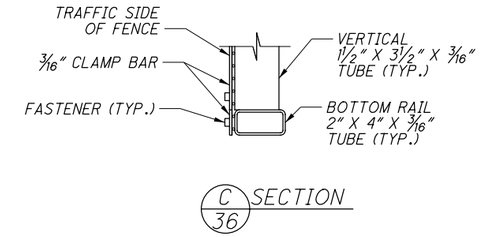

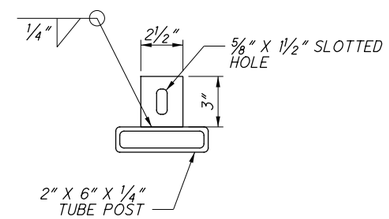

CONNECTION PLATE DETAILS

(PLAN VIEW)

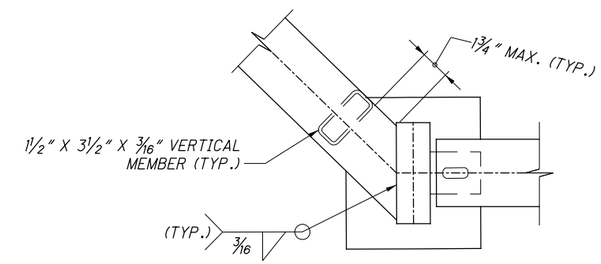

PILASTER AREA POST/RAIL DETAIL

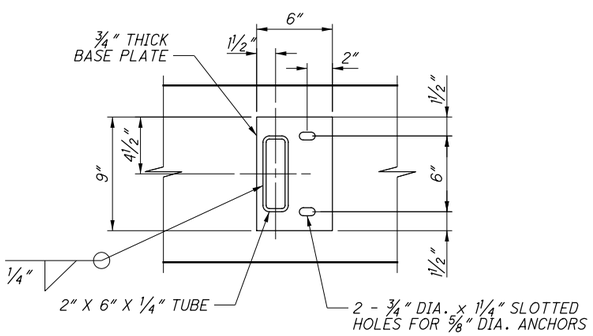

TYPICAL END POST BASE PLATE DETAIL

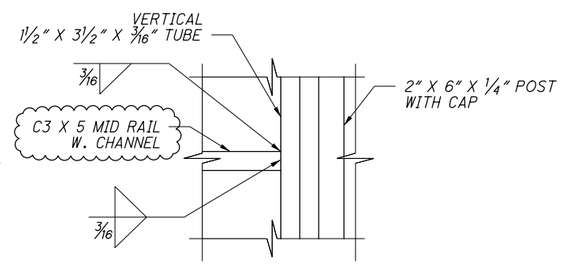

DETAIL 2 (37/46)

(FENCE FABRIC FASTENERS NOT SHOWN)

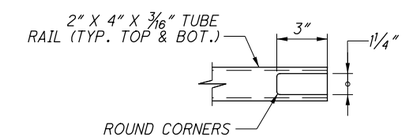

TYPICAL TUBE CUTOUT DETAIL

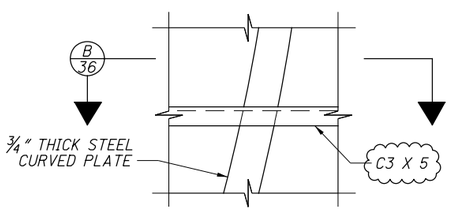

DETAIL 4 (37/46)

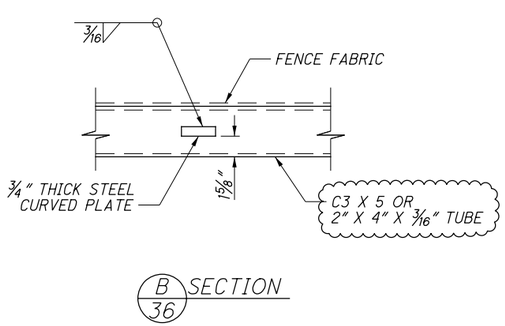

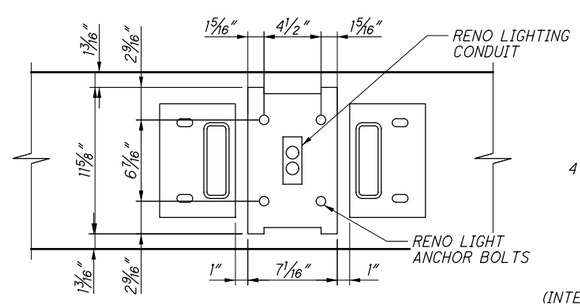

DETAIL 3 (37/46)

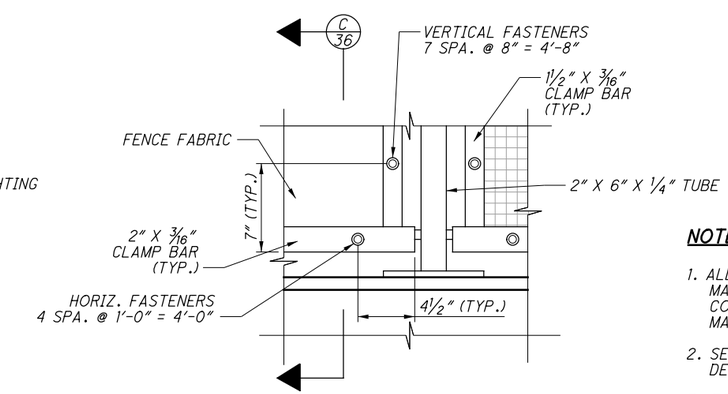

FENCE FABRIC CONNECTION ELEVATION DETAIL

(INTERIOR/TRAFFIC SIDE SHOWN, SPACING FOR STD PANEL SHOWN, OTHERS SIMILAR)

NOTES:

1. ALL POSTS SHALL BE INSTALLED PLUMB. PROVIDE SHIMS MADE FROM MULTI-POLYMER PLASTIC WITH MINIMUM COMPRESSIVE STRENGTH OF 5,000 PSI. ENDS OF POSTS MAY BE CUT ON BIAS TO PROVIDE PLUMB INSTALLATION.
2. SEE STD. DWG. VPF-1-90 FOR ADDITIONAL NOTES AND DETAILS RELATED TO BASE PLATE SHIMS AND CAULKING.
3. FOR CURVED STEEL PLATE DETAILS, SEE SHEET 37/46 .
4. PROVIDE GROUNDING OF RENO LIGHT ANCHOR BOLTS PER STD. DWG. HL-50.21.
5. SPACING OF HORIZONTAL FASTENERS VARIES FOR CANTILEVERED SECTIONS OF FENCE.

NO.	DATE	DESCRIPTION
1	2024-09-10	RECORD DRAWINGS
0	2019-03-13	RFC

ISSUE RECORD

DESIGN AGENCY
Michael Baker INTERNATIONAL
1111 SUPERIOR AVE E., SUITE 2300, CLEVELAND, OH 44114

DESIGNED	DRAWN	REVIEWED	DATE
GMC	GMC	JWB	3/01/19
CHECKED	REVISED	STRUCTURE FILE NUMBER	
CDC		1801517	

RECORD PLANS

PARAPET DETAILS (6 OF 7)
CUY-010-1976L
OH-10 WESTBOUND OVER GCRTA BLUE AND GREEN LINES

RECORD PLANS

CUY-IR490/SR010-2.09/19.28
PID No. 96833

RECORD PLANS

36/46

91/110

BU-19 - GCRTA BLUE/GREEN BRIDGES & CATENARY MODIFICATIONS
...\Sheets\010_1976L_SA505.dgn 11/22/2024 9:38:40 AM Rohit.Bk

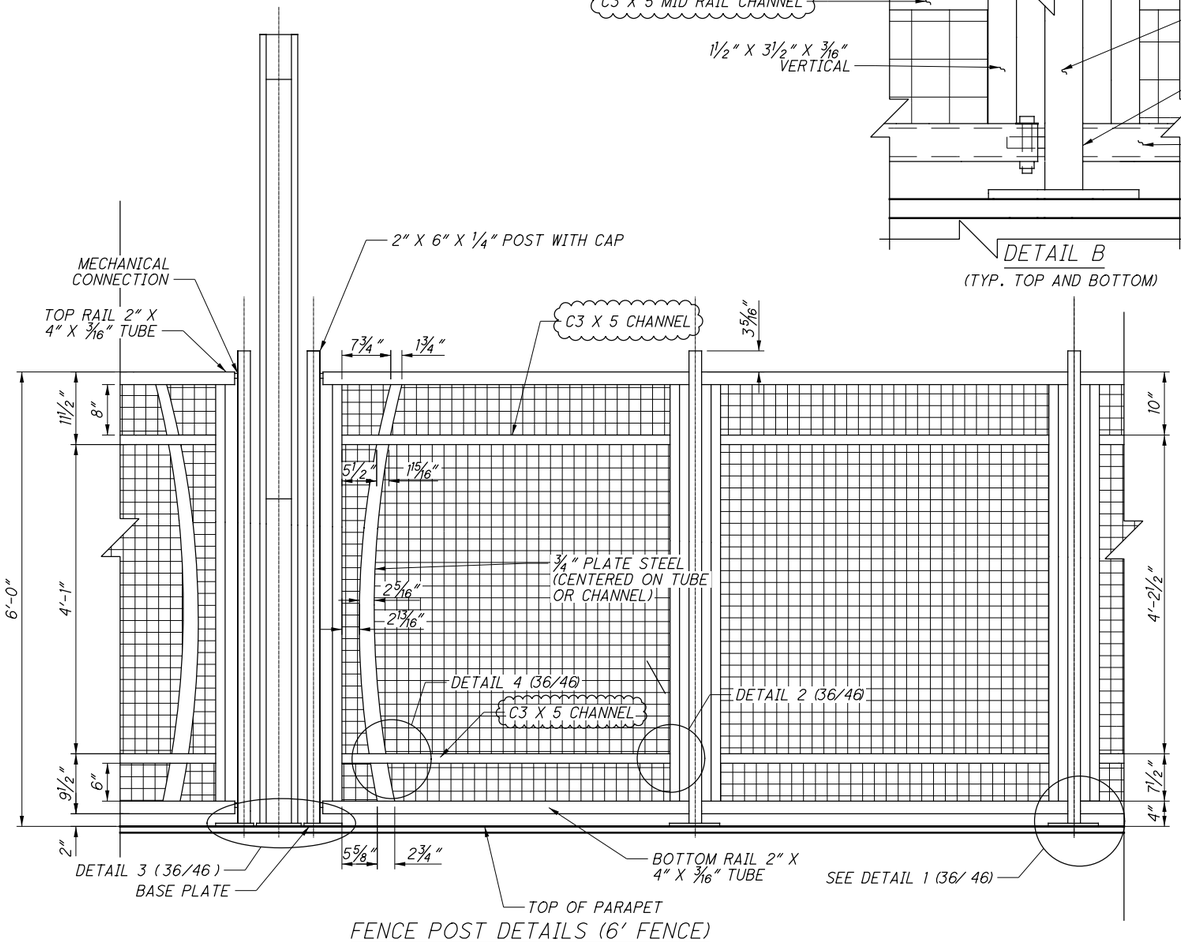

FENCE POST DETAILS (6' FENCE)

(PLACE FABRIC ON INSIDE, PEDESTRIAN SIDE OF FENCE)
(FENCE FABRIC FASTENERS NOT SHOWN)

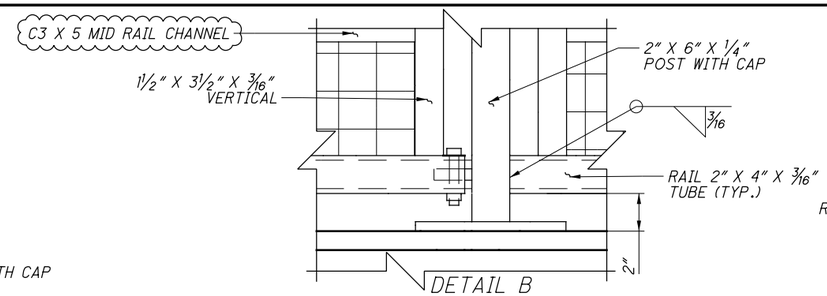

DETAIL B

(TYP. TOP AND BOTTOM)

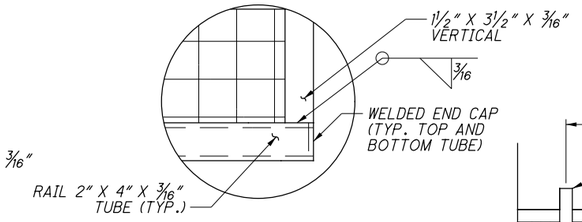

DETAIL A

(TYP. TOP AND BOTTOM)

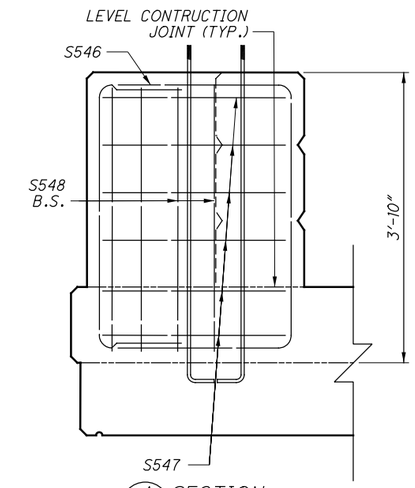

A SECTION 26

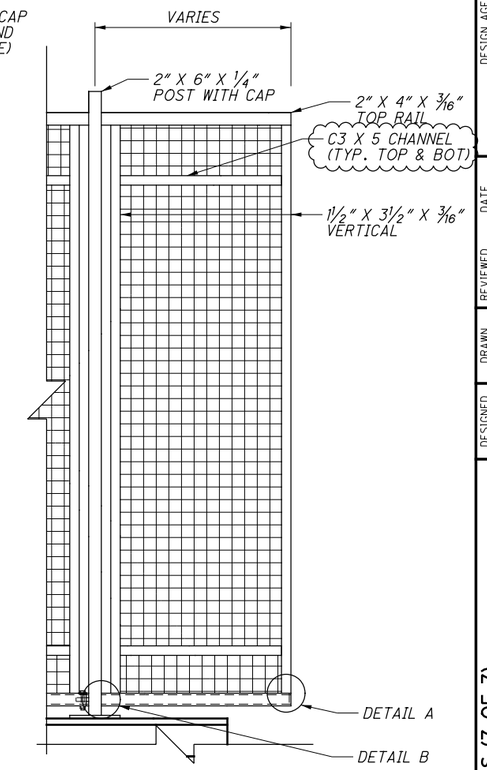

TYPICAL CANTILEVERED FENCE PANEL ELEVATION DETAIL

(PLACE FABRIC ON TRAFFIC SIDE, FENCE FABRIC FASTENER NOT SHOWN)

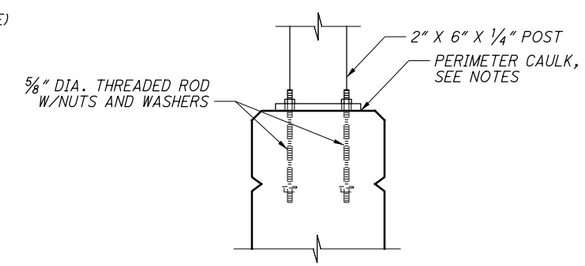

TYPICAL ANCHOR BOLT DETAILS

THREADED ROD SHALL BE ASTM A320 B8
CLASS 2 HARDENED STAINLESS STEEL (AISI 304),
Fy=100 KSI, WITH ASTM A194 GRADE 8
NUTS AND SS304 WASHERS

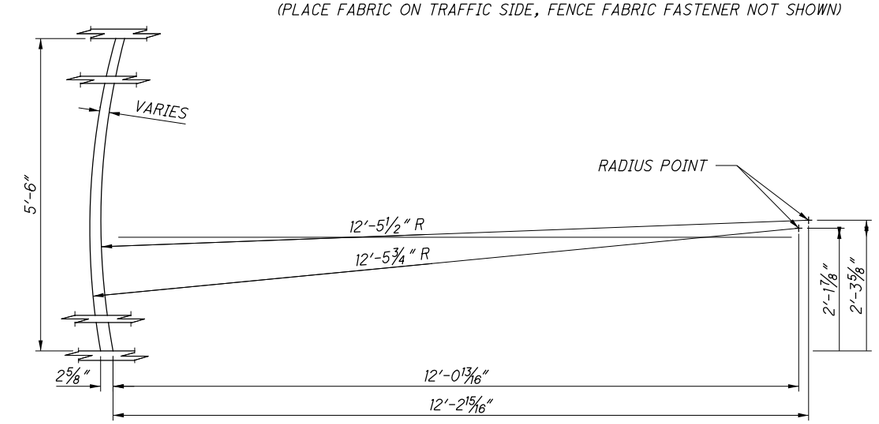

TYPICAL CURVED STEEL PLATE DETAIL

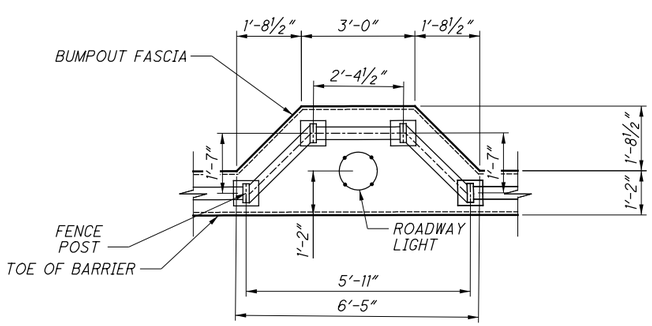

TYPICAL LIGHTPOLE PILASTER

NOTES:

1. FOR ADDITIONAL RAILING SAWCUT DETAILS, SEE ODOT STANDARD DRAWING BR-2-15
2. FOR SAWCUT SPACING, SEE PLAN SHEET (31 / 46)
3. FOR REINFORCING SCHEDULE, SEE SHEET (45 / 46)
4. FOR ADDITIONAL DETAILS NOT LABELED, SEE PLAN SHEET (31 / 46)
5. FOR ADDITIONAL PILASTER DETAILS NOT SHOWN, SEE ODOT STANDARD DRAWING HL-20.14

NO.	DATE	DESCRIPTION
1	2024-09-10	RECORD DRAWINGS
0	2019-03-13	RFC

ISSUE RECORD

DESIGN AGENCY
Michael Baker INTERNATIONAL
1111 SUPERIOR AVE E., SUITE 2300, CLEVELAND, OH 44114

DESIGNED	DRAWN	REVIEWED	DATE
GMC	GMC	JWB	3/01/19
CHECKED	REVISED	STRUCTURE FILE NUMBER	
CDC		1801518	

RECORD PLANS

PARAPET DETAILS (7 OF 7)
CUY-010-1976L
OH-10 EASTBOUND OVER GCRTA BLUE AND GREEN LINES

RECORD PLANS

CUY-IR490/SR010-2.09/19.28
PID No. 96833

37/46

92/110

BU-19 - GCRTA BLUE/GREEN BRIDGES & CATENARY MODIFICATIONS
...\Sheets\010_1976L_SA508.dgn 12/11/2024 5:09:47 PM Rohit.Bk

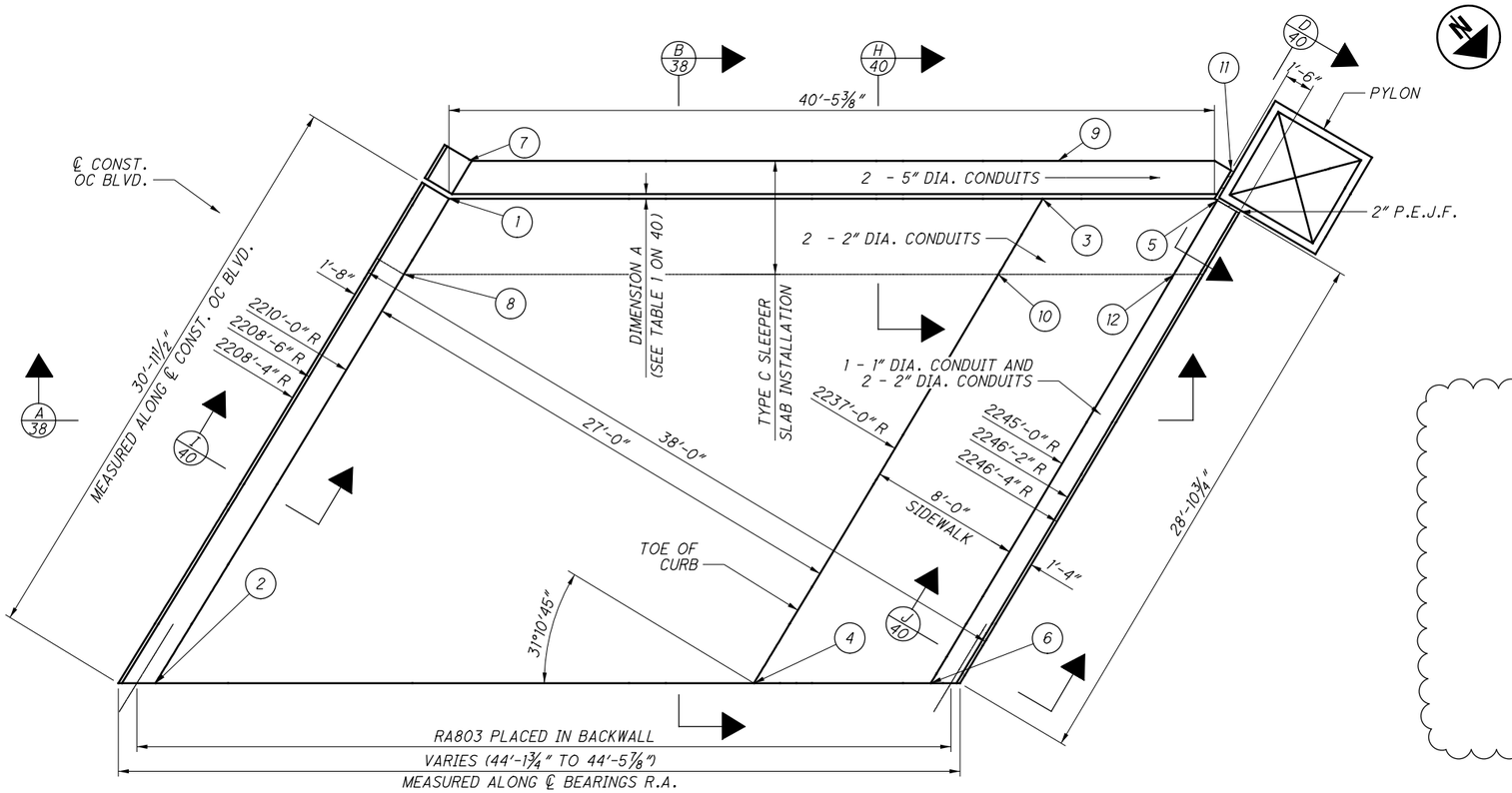

REAR APPROACH SLAB PLAN

APPROACH SLAB SURFACE STATIONS, OFFSETS, AND ELEVATIONS			
1	156+13.49	10' LT	681.44
2	156+43.31	10' LT	682.00
3	155+97.68	37' LT	680.61
4	156+27.00	37' LT	681.16
5	155+93.18	45' LT	681.35
6	156+22.26	45' LT	681.89

SLEEPER SLAB SURFACE STATIONS, OFFSETS, AND ELEVATIONS			
7	156+11.17	10' LT	681.40
8	156+18.13	10' LT	681.53
9	155+95.40	37' LT	680.57
10	156+02.24	37' LT	680.70
11	155+91.48	44.83' LT	681.32
12	155+97.62	45' LT	681.43

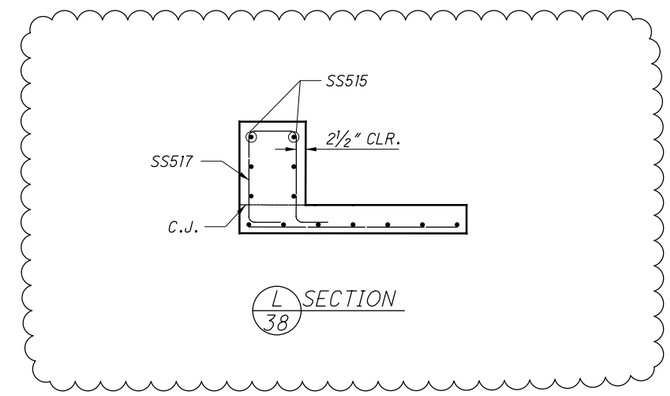

L 38 SECTION

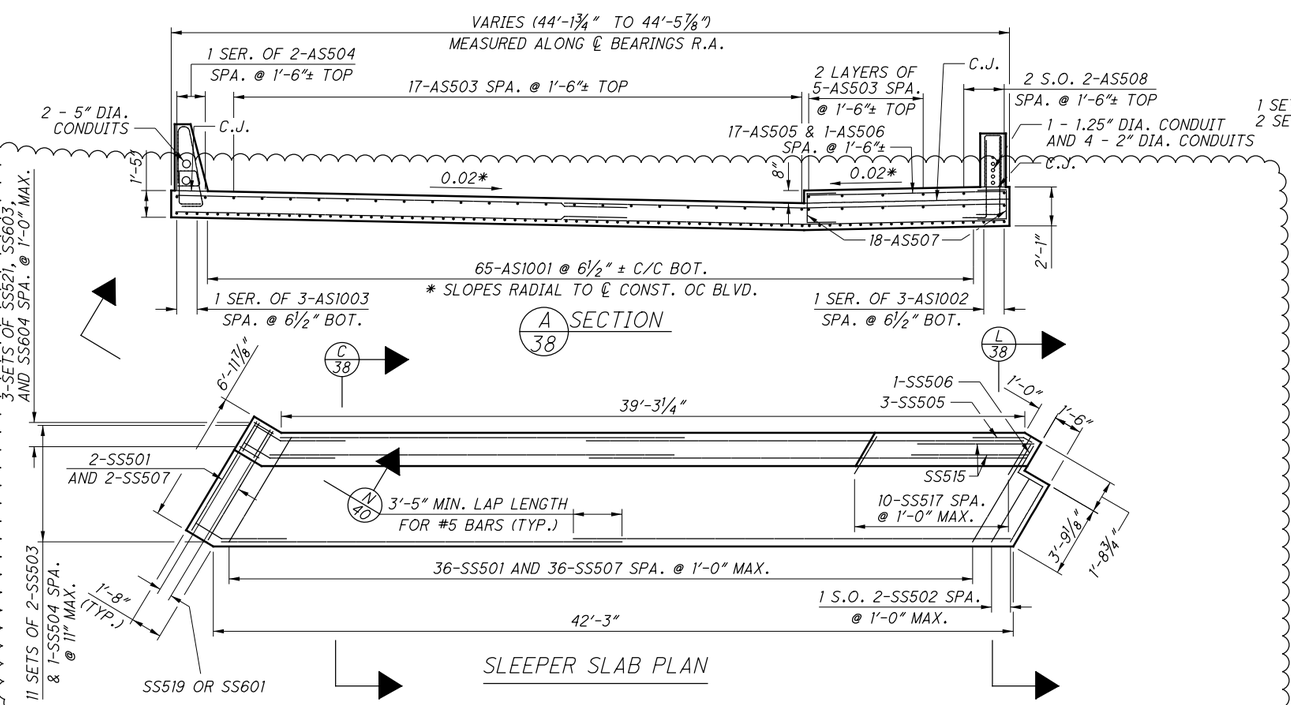

A 38 SECTION

SLEEPER SLAB PLAN

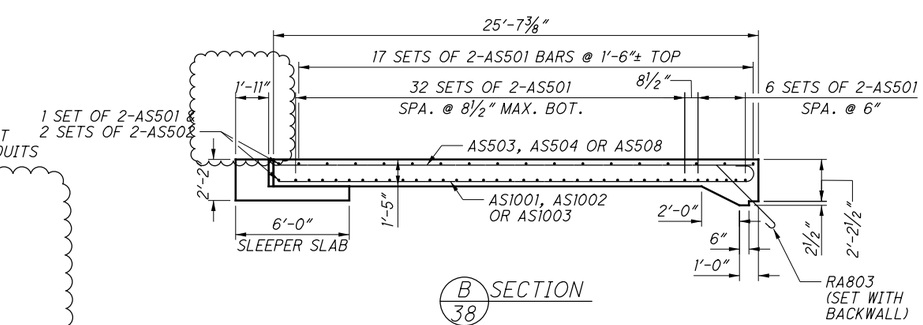

B 38 SECTION

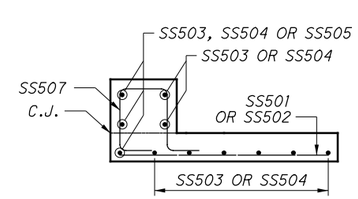

C 38 SECTION

NOTES:

1. APPROACH SLAB AND SLEEPER SLAB LONGITUDINAL BARS SHALL BE PLACED PARALLEL TO THE ℄ OF THE ROADWAY. TRANSVERSE BARS SHALL BE PLACED PARALLEL TO THE ABUTMENT.
2. FOR INFORMATION NOT SHOWN SEE STANDARD BRIDGE DRAWNING AS-1-15 AND AS-2-15.
3. FOR PYLON DETAILS, SEE SHEET 41 OF 46.
4. PROVIDE 2" CONCRETE COVER ON REINFORCEMENT BARS UNLESS NOTED OTHERWISE.

NO.	DATE	DESCRIPTION
2	2024-09-10	RECORD DRAWINGS
1	2021-05-18	DC056
0	2019-06-20	RFC

ISSUE RECORD

DESIGN AGENCY
Michael Baker INTERNATIONAL
1111 SUPERIOR AVE E., SUITE 2300, CLEVELAND, OH 44114

DESIGNED	DRAWN	REVIEWED	DATE
KAG	GMC	JWB	3/15/19
CHECKED	REVISED	STRUCTURE FILE NUMBER	
ETB		1801517	

RECORD PLANS

REAR APPROACH SLAB DETAILS
CUY-010-1976L
OH-10 WESTBOUND OVER GCRTA BLUE AND GREEN LINES

RECORD PLANS

CUY-IR490/SR010-2.09/19.28
PID No. 96833

BU-19 - GCRTA BLUE/GREEN BRIDGES & CATENARY MODIFICATIONS
...\Sheets\010_1976L_SM501.dgn 11/21/2024 4:49:04 PM Rohit.Bk

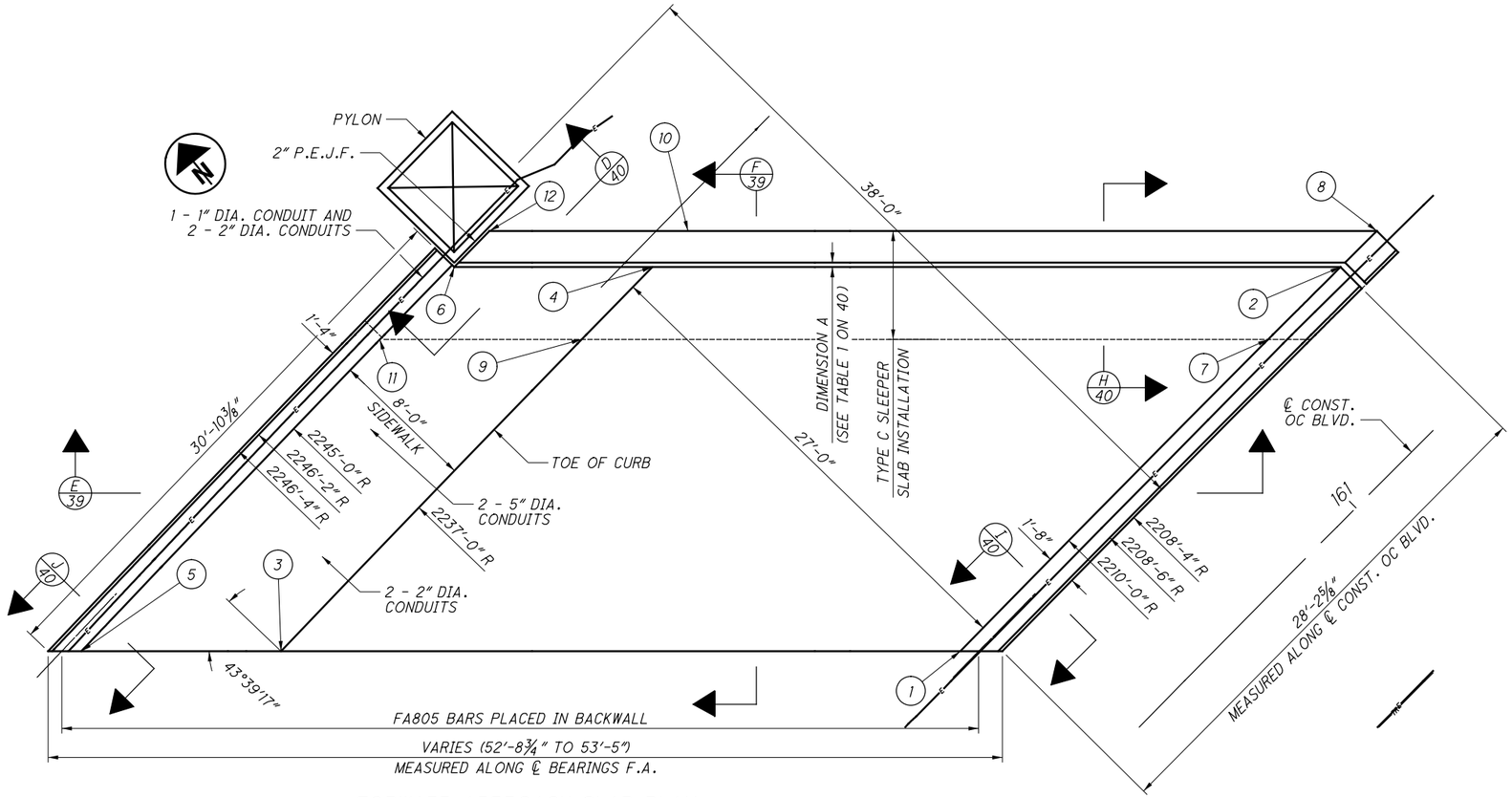

FORWARD APPROACH SLAB PLAN

APPROACH SLAB SURFACE STATIONS, OFFSETS, AND ELEVATIONS			
1	160+79.05	10' LT	686.64
2	161+08.78	10' LT	685.97
3	160+53.26	37' LT	686.54
4	160+82.30	37' LT	686.04
5	160+45.80	45' LT	687.46
6	160+74.79	45' LT	687.01

SLEEPER SLAB SURFACE STATIONS, OFFSETS, AND ELEVATIONS			
7	161+03.15	10' LT	686.11
8	161+11.61	10' LT	685.91
9	160+76.79	37' LT	686.15
10	160+85.05	37' LT	685.98
11	160+69.17	45' LT	687.11
12	160+77.52	44.84' LT	686.95

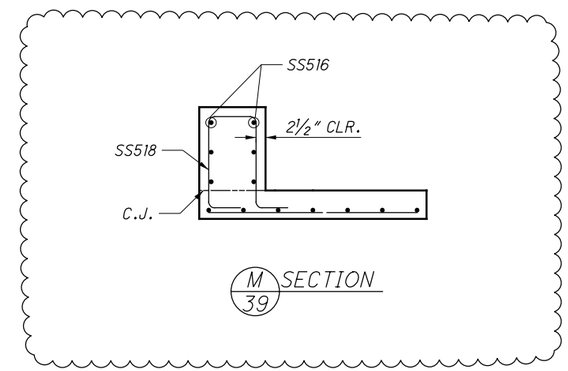

M/39 SECTION

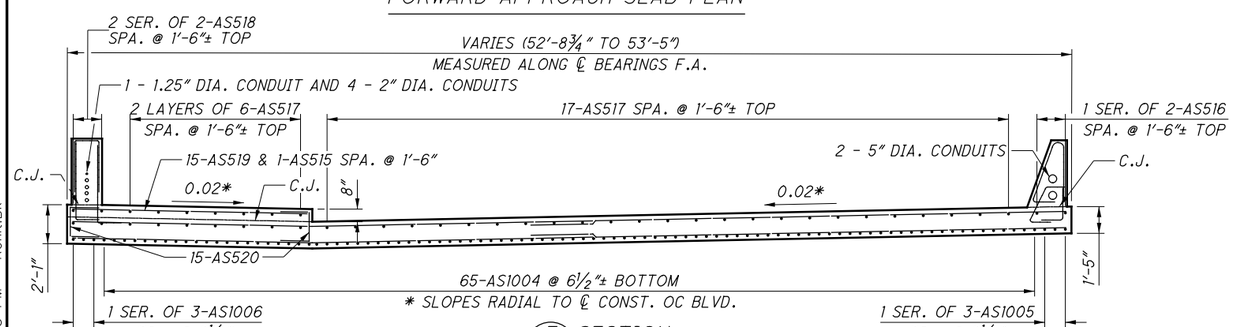

E/39 SECTION

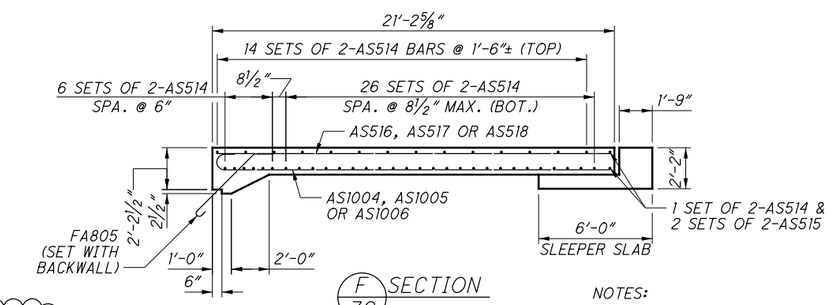

F/39 SECTION

NOTES:

1. APPROACH SLAB AND SLEEPER SLAB LONGITUDINAL BARS SHALL BE PLACED PARALLEL TO THE ℄ OF THE ROADWAY. TRANSVERSE BARS SHALL BE PLACED PARALLEL TO THE ABUTMENT.
2. FOR INFORMATION NOT SHOWN, SEE STANDARD BRIDGE DRAWING AS-1-15 AND AS-2-15.
3. FOR PYLON DETAILS, SEE SHEET 41 OF 46.
4. PROVIDE 2" CONCRETE COVER ON REINFORCEMENT BARS UNLESS NOTED OTHERWISE.

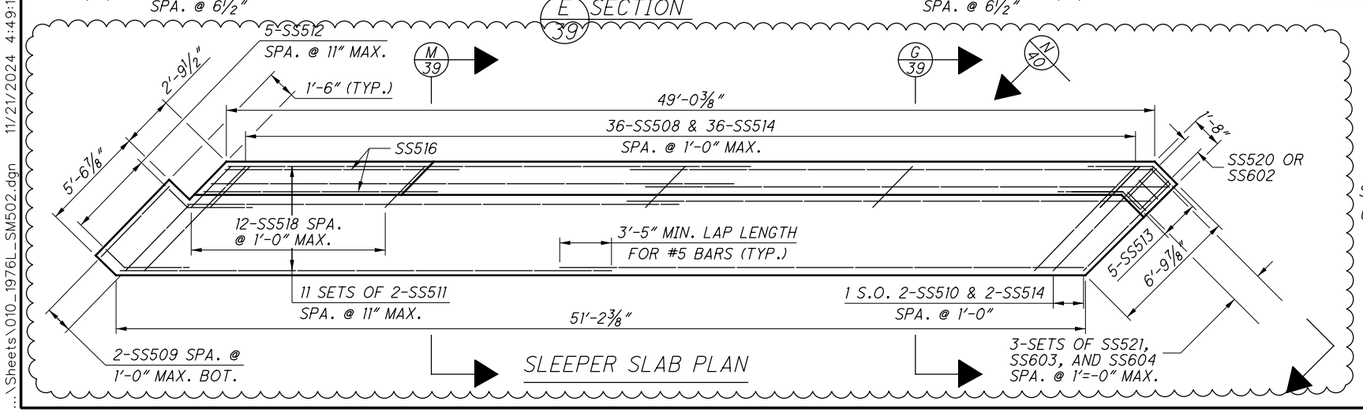

SLEEPER SLAB PLAN

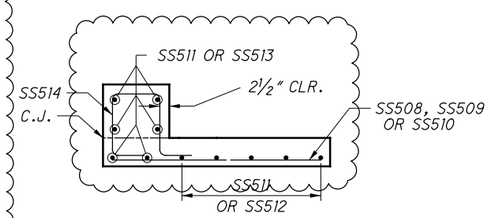

G/39 SECTION

NO.	DATE	DESCRIPTION
2	2024-09-10	RECORD DRAWINGS
1	2021-05-18	DC056
0	2019-06-20	RFC

ISSUE RECORD

DESIGN AGENCY
Michael Baker INTERNATIONAL
1111 SUPERIOR AVE E. SUITE 2300, CLEVELAND, OH 44114

DESIGNED	DRAWN	REVIEWED	DATE
KAG	GMC	JWB	3/15/19
CHECKED	REVISED	STRUCTURE FILE NUMBER	
ETB		1801517	

RECORD PLANS

FORWARD APPROACH SLAB DETAILS
CUY-010-1976L
OH-10 WESTBOUND OVER GCRTA BLUE AND GREEN LINES

RECORD PLANS

CUY-IR490/SR010-2.09/19.28
PID No. 96833

BU-19 - GCRTA BLUE/GREEN BRIDGES & CATENARY MODIFICATIONS
...\Sheets\010_1976L_SM502.dgn 11/21/2024 4:49:15 PM Rohit.Bk

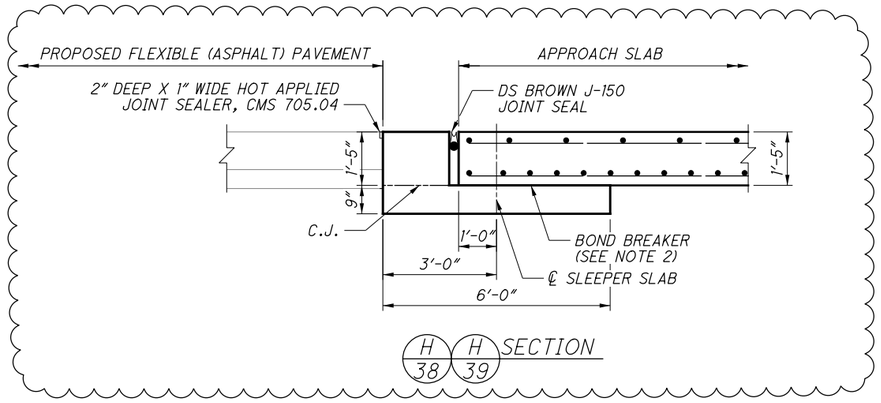

H 38 H 39 SECTION

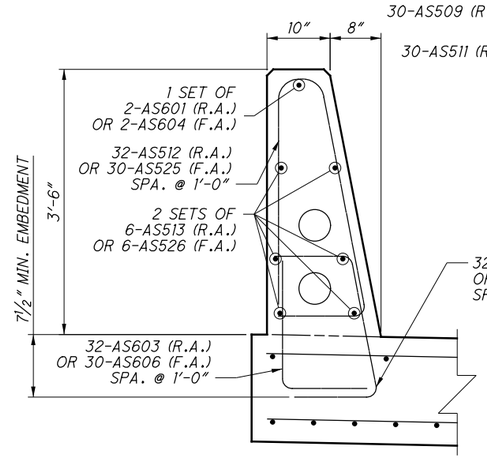

I 38 I 39 SECTION

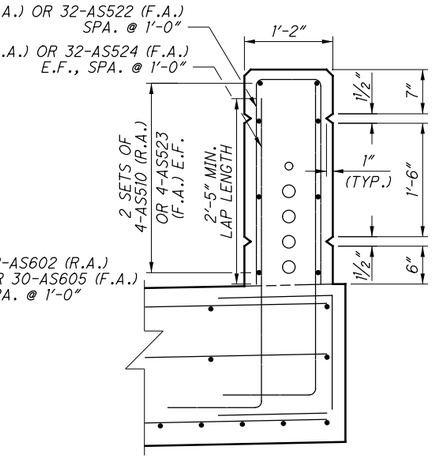

J 38 J 39 SECTION

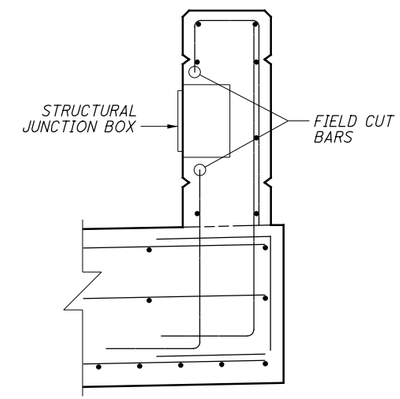

K 40 SECTION

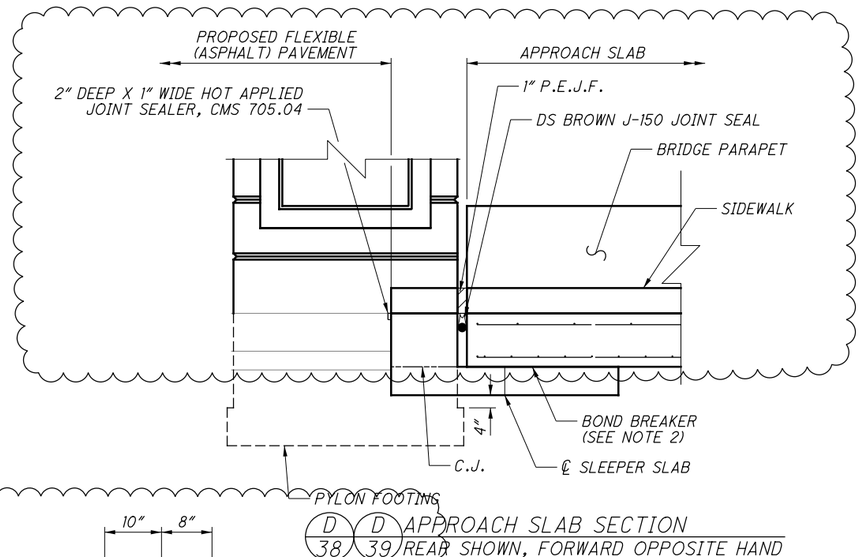

D 38 D 39 APPROACH SLAB SECTION
REAR SHOWN, FORWARD OPPOSITE HAND

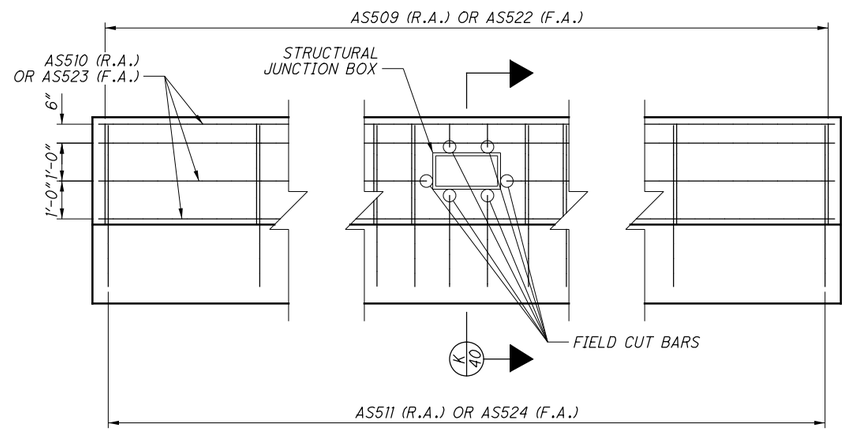

NORTH BARRIER ELEVATION

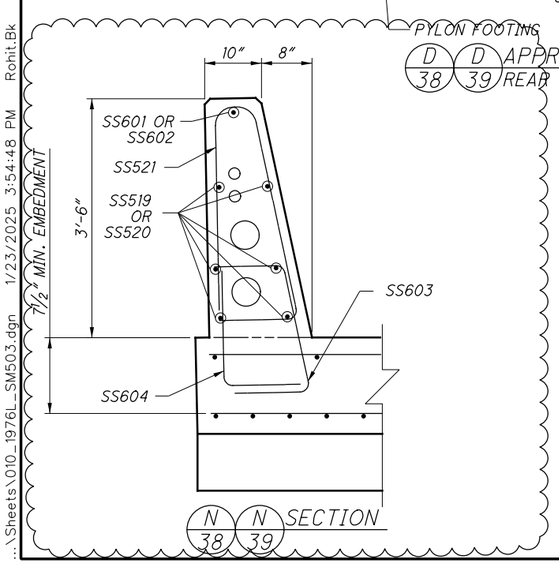

N 38 N 39 SECTION

LAP LENGTHS:

#5 BARS	3'-5" U.N.O.
#6 BARS	4'-4"

NOTES:

1. BACKFILL MATERIAL PLACED BENEATH APPROACH SLABS SHALL CONFORM TO C&MS 703.17 AND MEET THE COMPACTION REQUIREMENTS OF C&MS 304.05. IN ADDITION, THE BACKFILL MATERIAL SHALL BE PLACED AND COMPACTED IN 6" LIFTS.
2. SEE STANDARD BRIDGE DRAWING AS-1-15 AND AS-2-15 FOR ADDITIONAL INFORMATION.
3. PROVIDE 2" CONCRETE COVER ON REINFORCEMENT BARS UNLESS NOTED OTHERWISE.

NO.	DATE	DESCRIPTION
2	2024-09-10	RECORD DRAWINGS
1	2021-05-18	DC056
0	2019-06-20	RFC

ISSUE RECORD

DESIGN AGENCY
Michael Baker INTERNATIONAL
1111 SUPERIOR AVE E., SUITE 2300, CLEVELAND, OH 44114

DESIGNED	DRAWN	REVIEWED	DATE
KAG	GMC	JWB	3/15/19
CHECKED	REVISED	STRUCTURE FILE NUMBER	
ETB		1801517	

RECORD PLANS

APPROACH SLAB INSTALLATION SECTIONS
CUY-010-1976L
OH-10 WESTBOUND OVER GCRTA BLUE AND GREEN LINES

RECORD PLANS

CUY-IR490/SR010-2.09/19.28
PID No. 96833

RECORD PLANS

BU-19 - GCRTA BLUE/GREEN BRIDGES & CATENARY MODIFICATIONS
...\Sheets\010_1976L_SM503.dgn 1/23/2025 3:54:48 PM Rohit.Bk

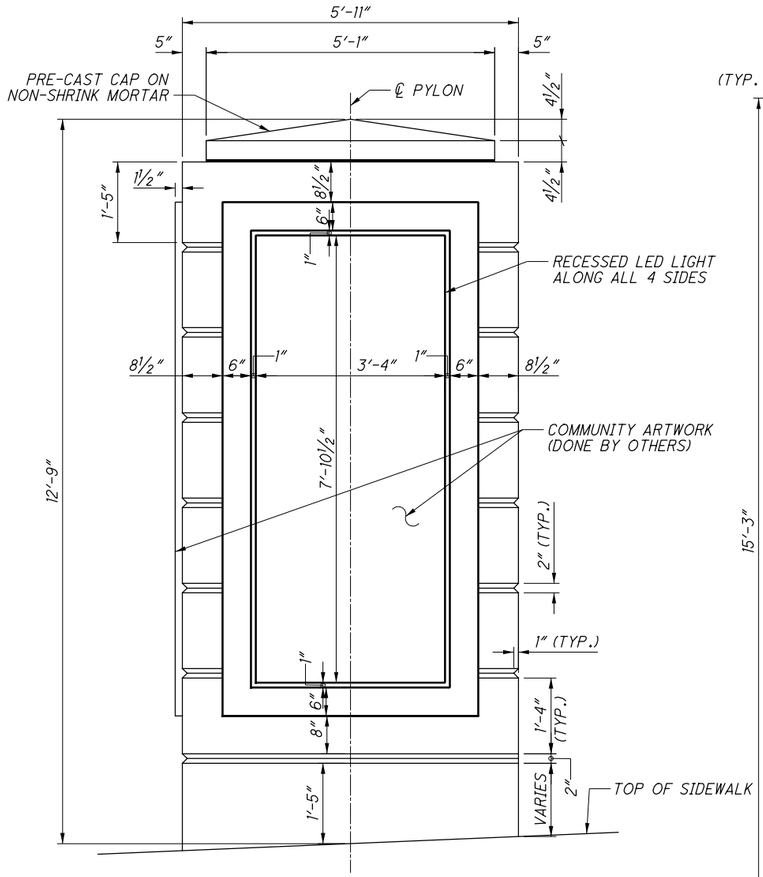

A/41 SECTION
(VIEW A SHOWN, VIEW C SIMILAR BUT OPPOSITE HAND)

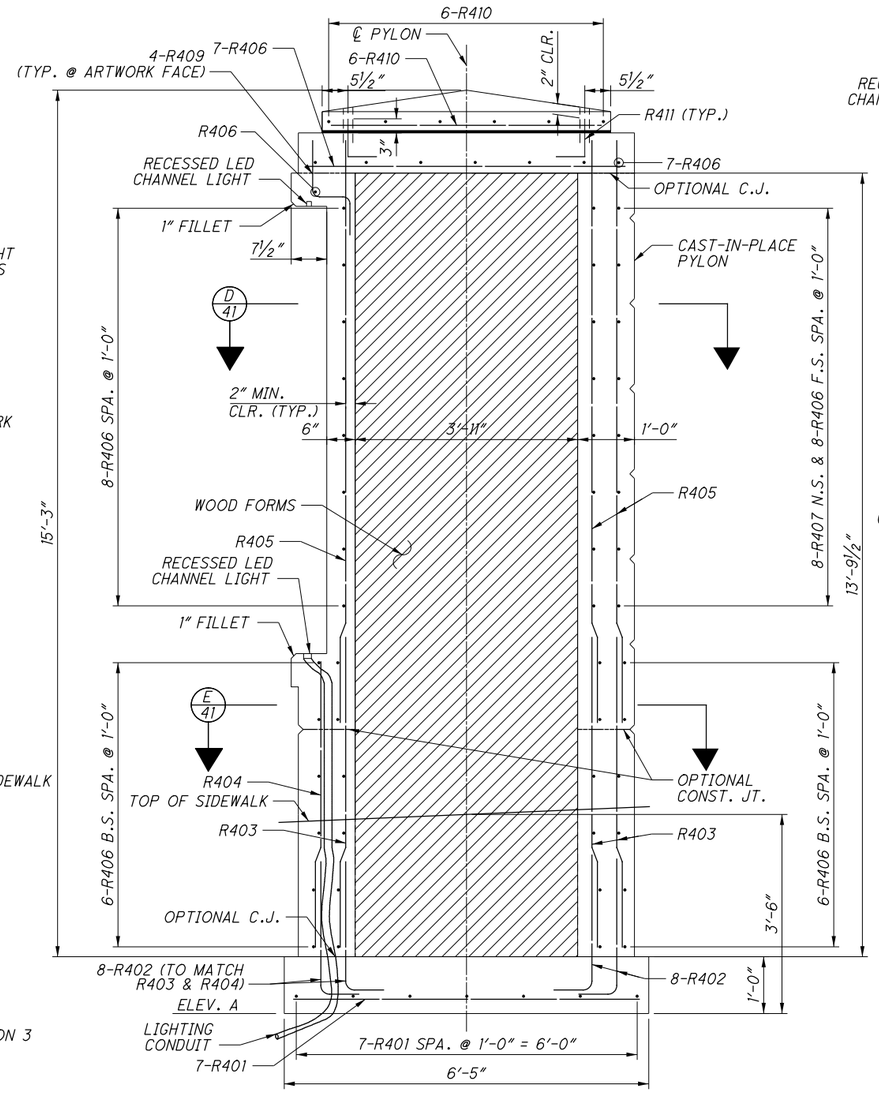

B/41 SECTION

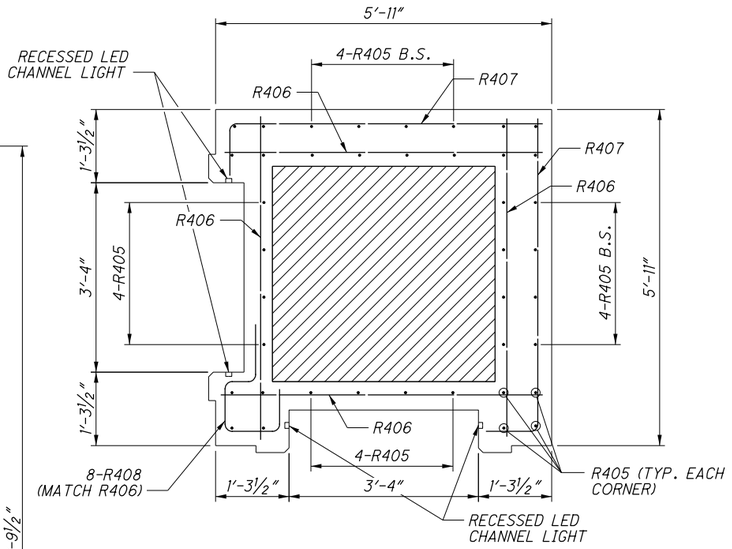

D/41 SECTION

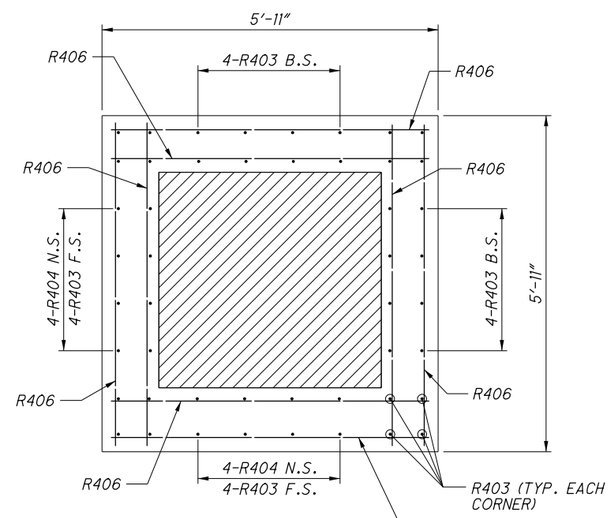

E/41 SECTION

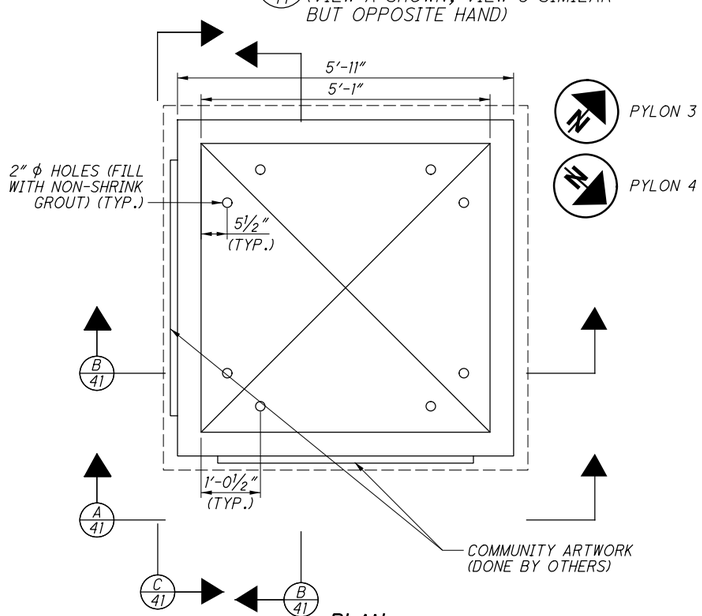

PLAN

ELEVATION TABLE	
PYLON NUMBER	ELEV. A
PYLON 3	677.56
PYLON 4	683.38

NOTES:

1. FOR LOCATION OF PYLONS, SEE SHEET 31/ 46
2. SEAL ALL EXPOSED SURFACES OF PYLONS PER ITEM 512 SEALING OF CONCRETE SURFACES (EPOXY-URETHANE), AS PER PLAN.
3. ALL CONCRETE SHALL BE CLASS QC2 WITH QC/QA.
4. FOR REINFORCING DETAILS SEE SHEET 42/ 46.
5. PROVIDE 2" CONCRETE COVER ON REINFORCEMENT BARS UNLESS NOTED OTHERWISE.

NO.	DATE	DESCRIPTION
0	2019-06-20	RFC

ISSUE RECORD

DESIGN AGENCY
Michael Baker INTERNATIONAL
1111 SUPERIOR AVE E., SUITE 2300, CLEVELAND, OH 44114

DESIGNED	DRAWN	REVIEWED	DATE
GMC	GMC	JWB	3/15/19
CHECKED	REVISED	STRUCTURE FILE NUMBER	
CDC		1801517	

RECORD PLANS

PYLON DETAILS
CUY-010-1976L
OH-10 WESTBOUND OVER GCRTA BLUE AND GREEN LINES

RECORD PLANS

CUY-IR490/SR010-2.09/19.28
PID No. 96833

RECORD PLANS

BU-19 - GCRTA BLUE/GREEN BRIDGES & CATENARY MODIFICATIONS
...\Sheets\010_1976L_SA501.dgn 6/27/2019 5:05:41 PM Christopher.Lemley

REAR ABUTMENT												
MARK	NUMBER TOTAL	LENGTH	WEIGHT (LBS.)	TYPE	DIMENSIONS						SER INC.
					A	B	C	D	E	R	
RA401	13	3′-0″	26	19	2′-0″	0′-6″	0′-10″				
RA402	2	7′-2″	10	STR.							
RA403	2	6′-4″	8	STR.							
RA501	42	11′-6″	504	2	2′-5″	6′-11″	2′-5″				
RA502	36	6′-6″	244	1	1′-0″	5′-7″					
	2	9′-7″				5′-0″					
RA503	SER. OF	TO	86	2	2′-5″	TO	2′-5″				6″
	4	11′-1″				6′-6″					
RA504	2	12′-8″	26	2	2′-5″	8′-1″	2′-5″				
RA505	10	11′-4″	118	2	3′-4″	4′-11″	3′-4″				
RA506	12	10′-8″	134	2	3′-0″	4′-11″	3′-0″				
RA507	12	10′-0″	125	2	2′-8″	4′-11″	2′-8″				
RA508	10	9′-8″	101	2	2′-6″	4′-11″	2′-6″				
	2	8′-7″				3′-10″					
RA509	SER. OF	TO	56	2	2′-6″	TO	2′-6″				4″
	3	9′-3″				4′-6″					
RA510	2	10′-6″	22	2	2′-6″	5′-9″	2′-6″				
RA511	20	30′-0″	626	STR.							
RA512	20	19′-0″	396	STR.							
RA513	12	14′-9″	185	19	11′-4″	1′-10″	2′-11″				
RA514	15	13′-1″	205	19	9′-8″	1′-10″	2′-11″				
RA515	3	14′-2″	44	19	10′-9″	1′-10″	2′-11″				
RA516	30	12′-8″	396	STR.							
	1	12′-4″				10′-7″					
RA517	SER. OF	TO	41	2	1′-0″	TO	1′-0″				9″
	3	13′-10″				12′-1″					
RA518	6	15′-4″	96	1	14′-5″	1′-0″					
RA519	4	3′-5″	14	2	0′-11″	1′-10″	0′-11″				
RA520	1	37′-1″	39	STR.							
RA521	1	11′-6″	12	1	10′-7″	1′-0″					
RA522	13	5′-8″	77	19	3′-6″	1′-1″	1′-10″				

REAR ABUTMENT												
MARK	NUMBER TOTAL	LENGTH	WEIGHT (LBS.)	TYPE	DIMENSIONS						SER INC.
					A	B	C	D	E	R	
RA601	36	14′-5″	780	2	5′-7″	6′-5″	2′-9″				
RA602	41	13′-1″	806	2	6′-0″	1′-5″	6′-0″				
RA603	41	8′-11″	549	2	3′-11″	1′-5″	3′-11″				
RA604	41	10′-9″	662	2	5′-1″	0′-11″	5′-1″				
RA605	6	12′-5″	112	2	4′-8″	6′-5″	1′-8″				
	2	9′-10″				5′-0″					
RA606	SER. OF	TO	127	2	2′-7″	TO	2′-7″				6″
	4	11′-4″				6′-6″					
RA607	2	12′-11″	39	2	2′-7″	8′-1″	2′-7″				
	2	12′-10″				3′-10″					
RA608	SER. OF	TO	119	2	4′-8″	TO	4′-8″				4″
	3	13′-6″				4′-6″					
RA609	2	14′-9″	44	2	4′-8″	5′-9″	4′-8″				
RA610	4	13′-4″	80	2	6′-0″	1′-8″	6′-0″				
RA611	4	9′-2″	55	2	3′-11″	1′-8″	3′-11″				
RA612	4	10′-11″	66	2	5′-1″	1′-1″	5′-1″				
RA613	10	20′-11″	314	2	9′-11″	1′-5″	9′-11″				
RA614	10	14′-9″	222	2	6′-10″	1′-5″	6′-10″				
RA615	2	21′-2″	64	2	9′-11″	1′-8″	9′-11″				
RA616	2	15′-0″	45	2	6′-10″	1′-8″	6′-10″				
RA617	4	4′-5	27	1	1′-7″	3′-0 1/2″					
RA618	6	14′-10″	134	3	3′-9″	3′-1″					
RA701	18	23′-10″	877	2	11′-9″	0′-8″	11′-9″				
RA702	18	13′-0″	478	2	6′-4″	0′-8″	6′-4″				
RA801	12	25′-9″	825	STR.							
RA802	12	26′-9″	857	STR.							
RA803	31	7′-0″	579	18	4′-8″	1′-0″	1′-0″				
RA901	10	4′-4″	147	1	1′-7″	3′-0 1/2″					
RA902	4	5′-9″	78	STR.							
		TOTAL:	11677	LBS.							

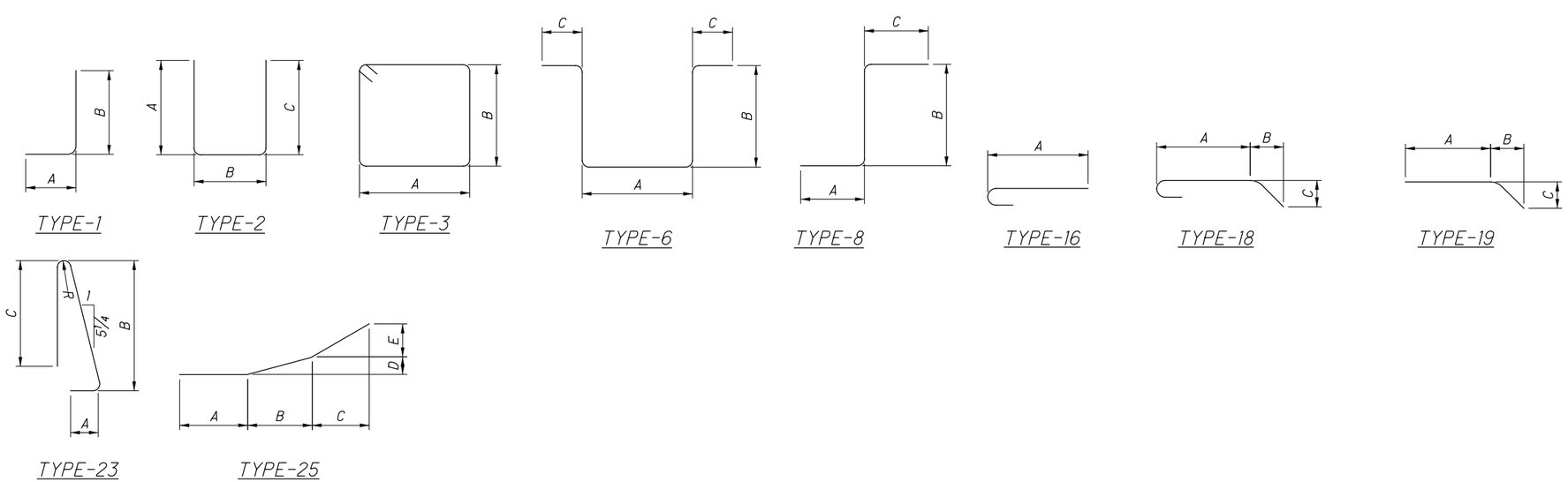

NOTES:

1. SERIES BARS - EACH BAR VARIES BY TABULATED AMOUNT.
2. ALL DIMENSIONS ARE OUT TO OUT.
3. TYPE "STR" INDICATES STRAIGHT BAR.
4. THE BAR SIZE NUMBER IS SPECIFIED IN THE "MARK" COLUMN. THE FIRST DIGIT INDICATES THE BAR SIZE NUMBER. FOR EXAMPLE, EA501 IS A #5 BAR SIZE.
5. ALL BARS SHALL BE EPOXY COATED UNLESS NOTED OTHERWISE.
6. SUBTOTALS AND TOTAL WEIGHTS ARE FOR INFORMATIONAL PURPOSES ONLY. IF THE REINFORCING LIST PROVIDED IN THE PLANS IS USED IT SHALL BE VERIFIED BY THE CONTRACTOR. ANY REVISIONS IN THE REINFORCING STEEL LIST AS SHOWN IN THE PLANS WILL NOT BE REASON FOR ADJUSTMENT IN THE BID PRICE FOR STRUCTURAL CONCRETE.
7. USE STANDAND HOOKS FOR ENDS OF BARS NOT SPECIFICALLY DIMENSIONED IN DETAILS.

NO.	DATE	DESCRIPTION
0	2019-06-20	RFC

ISSUE RECORD

DESIGN AGENCY
Michael Baker INTERNATIONAL
1111 SUPERIOR AVE E., SUITE 2300, CLEVELAND, OH 44114

DESIGNED	DRAWN	REVIEWED	DATE
SSW	SSW	JWB	3/15/19
CHECKED	REVISED	STRUCTURE FILE NUMBER	
ETB		1801517	

RECORD PLANS

REINFORCING SCHEDULE (1 OF 5)
CUY-010-1976L
OH-10 WESTBOUND OVER GCRTA BLUE AND GREEN LINES

RECORD PLANS

CUY-IR490/SR010-2.09/19.28
PID No. 96833

RECORD PLANS

BU-19 - GCRTA BLUE/GREEN BRIDGES & CATENARY MODIFICATIONS
...\Sheets\010_1976L_SL501.dgn 6/27/2019 5:05:46 PM Christopher.Lemley

FORWARD ABUTMENT											
MARK	NUMBER TOTAL	LENGTH	WEIGHT (LBS.)	TYPE	DIMENSIONS						SER INC.
					A	B	C	D	E	R	
FA501	59	11′-6″	708	2	2′-5″	6′-11″	2′-5″				
FA502	51	6′-6″	346	1	1′-0″	5′-7″					
	1	8′-9″				4′-2″					
FA503	SER. OF	TO	63	2	2′-5″	TO	2′-5″				6″
	6	11′-3″				6′-8″					
FA504	1	14′-1″	15	2	2′-5″	9′-6″	2′-5″				
FA505	47	9′-10″	482	2	2′-7″	4′-11″	2′-7″				
	1	7′-8″				2′-9″					
FA506	SER. OF	TO	45	2	2′-7″	TO	2′-7″				6″
	5	9′-8″				4′-9″					
FA507	1	11′-1″	12	2	2′-7″	6′-2″	2′-7″				
FA508	1	11′-8″	12	2	2′-7″	6′-9″	2′-7″				
FA509	21	30′-0″	657	STR.							
FA510	21	25′-9″	564	STR.							
FA511	4	23′-1″	96	STR.							
	2	11′-1″									
FA512	SER. OF	TO	249	STR.							2′-0″
	7	23′-1″									
FA513	2	25′-1″	52	19	18′-5″	6′-0″	3′-0″				
FA514	11	5′-3″	60	STR.							
FA515	4	3′-8″	15	2	0′-11″	2′-1″	0′-11″				
FA516	1	13′-5″	14	1	12′-6″	1′-0″					
FA517	1	40′-0″	42	STR.							
FA518	2	25′-1″	52	STR.							
FA519	2	25′-4″	53	STR.							
FA520	11	8′-1″	93	19	7′-4″	0′-8″	0′-4″				
FA521	2	15′-8″	33	STR.							
FA601	51	14′-4″	1098	2	5′-7″	6′-4″	2′-9″				
FA602	49	12′-7″	926	2	5′-9″	1′-5″	5′-9″				
FA603	49	8′-11″	656	2	3′-11″	1′-5″	3′-11″				
FA604	49	10′-9″	791	2	5′-1″	0′-11″	5′-1″				
FA605	8	12′-6″	150	2	4′-8″	6′-4″	1′-10″				
	1	9′-0″				4′-2″					
FA606	SER. OF	TO	92	2	2′-7″	TO	2′-7″				6″
	6	11′-6″				6′-8″					
FA607	1	14′-4″	22	2	2′-7″	9′-6″	2′-7″				

FORWARD ABUTMENT											
MARK	NUMBER TOTAL	LENGTH	WEIGHT (LBS.)	TYPE	DIMENSIONS						SER INC.
					A	B	C	D	E	R	
	2	11′-9″				2′-9″					
FA608	SER. OF	TO	192	2	4′-8″	TO	4′-8″				6″
	5	13′-9″				4′-9″					
FA609	1	15′-4″	23	2	4′-8″	6′-4″	4′-8″				
FA610	1	15′-9″	24	2	4′-8″	6′-9″	4′-8″				
FA611	4	13′-2″	79	2	5′-9″	2′-0″	5′-9″				
FA612	4	9′-6″	57	2	3′-11″	2′-0″	3′-11″				
FA613	4	11′-1″	67	2	5′-1″	1′-3″	5′-1″				
	1	8′-6″				2′-0″					
FA614	SER. OF	TO	144	3	1′-5″	TO					6″
	8	15′-6″				5′-6″					
FA615	12	14′-7″	263	2	6′-9″	1′-5″	6′-9″				
	1	13′-1″			6′-0″		6′-0″				
FA616	SER. OF	TO	231	2	TO	1′-5″	TO				6″
	9	21′-1″			10′-0″		10′-0″				
FA617	3	21′-3″	96	2	10′-1″	1′-5″	10′-1″				
FA618	3	15′-2″	68	2	6′-9″	2′-0″	6′-9″				
FA619	3	21′-10″	98	2	10′-1″	2′-0″	10′-1″				
FA620	2	14′-8″	44	2	6′-9″	1′-6″	6′-9″				
FA621	2	21′-4″	64	2	10′-1″	1′-6″	10′-1″				
FA622	4	4′-2	25	1	1′-7″	2′-9 1/2″					
FA623	6	15′-8″	141	3	4′-4″	2′-10″					
FA624	13			2	5′-2″	0′-6″	5′-2″				
FA801	6	31′-10″	510	STR.							
	1	31′-10″									
FA802	SER. OF	TO	567	STR.							1′-5″
	6	38′-11″									
FA803	6	32′-10″	526	STR.							
	1	32′-10″									
FA804	SER. OF	TO	583	STR.							1′-5″
	6	39′-11″									
FA805	36	7′-10″	753	18	5′-6″	1′-0″	1′-0″				
FA901	10	4′-1″	139	1	1′-7″	2′-9 1/2″					
FA902	4	6′-9″	92	STR.							
		TOTAL:	12184	LBS.							

NOTES:

1. SEE SHEET 97 FOR REINFORCING NOTES AND BAR BEND DETAILS.

NO.	DATE	DESCRIPTION
1	2024-09-10	RECORD DRAWINGS
0	2019-06-20	RFC

ISSUE RECORD

DESIGN AGENCY
Michael Baker INTERNATIONAL
1111 SUPERIOR AVE E., SUITE 2300, CLEVELAND, OH 44114

DESIGNED	DRAWN	REVIEWED	DATE
SSW	SSW	JWB	3/15/19
CHECKED	REVISED	STRUCTURE FILE NUMBER	
ETB		1801517	

RECORD PLANS

REINFORCING SCHEDULE (2 OF 5)
CUY-010-1976L
OH-10 WESTBOUND OVER GCRTA BLUE AND GREEN LINES

RECORD PLANS

CUY-IR490/SR010-2.09/19.28
PID No. 96833

RECORD PLANS

PIER 1											
MARK	NUMBER TOTAL	LENGTH	WEIGHT (LBS.)	TYPE	DIMENSIONS						SER INC.
					A	B	C	D	E	R	
1P401	112	10'-4"	773	2	3'-2"	4'-2"	3'-2"				
1P402	44	13'-8"	402	3	3'-8"	2'-11"					
1P403	88	4'-7"	269	34	3'-8"						
1P501	48	8'-5"	421	2	2'-3"	4'-2"	2'-3"				
1P502	12	20'-8"	259	1	1'-10"	18'-11"					
1P503	6	15'-2"	95	2	2'-3"	10'-11"	2'-3"				
1P504	16	30'-5"	508	1	0'-10"	29'-8"					
1P505	28	13'-6"	394	38	2'-6"					1'-9"	
1P701	132	11'-2"	3013	2	1'-2"	9'-2"	1'-2"				
1P801	16	33'-9"	1442	1	2'-5"	31'-6"					
1P802	22	36'-7"	2149	1	1'-4"	35'-5"					
1P901	18	34'-11"	2137	1	2'-9"	32'-5"					
1P1001	22	39'-1"	3700	1	1'-10"	37'-7"					
1P1101	48	33'-10"	8628	STR							
1P1102	48	17'-10"	4548	1	2'-0"	16'-2"					
1SP501	4	1214'-2"	5065	27	0'-3 3/8"	3'-6"	30'-7				
		TOTAL:	33803	LBS.							

PIER 2											
MARK	NUMBER TOTAL	LENGTH	WEIGHT (LBS.)	TYPE	DIMENSIONS						SER INC.
					A	B	C	D	E	R	
2P401	35	14'-7"	341	3	4'-2"	2'-10 1/2"					
2P402	70	5'-2"	242	34	4'-2"						
2P501	16	33'-10"	565	1	2'-3"	31'-8"					
2P502	6	14'-9"	92	2	1'-4"	12'-3	1'-4"				
2P503	12	20'-8"	259	1	1'-4 1/2"	19'-5 1/4"					
2P504	28	13'-6"	394	38	2'-6"					1'-9"	
2P601	138	15'-3"	3161	1	1'-0"	14'-4 1/2"					
2P602	62	11'-6"	1071	2	3'-10"	4'-2"	3'-10"				
2P603	24	19'-10"	715	24	4'-2"	6'-9"				2'-1"	
2P604	56	30'-0"	2523	STR							
2P605	32	11'-10"	569	2	4'-0"	4'-2"	4'-0"				
2P606	10	10'-0"	150	2	4'-0"	2'-4"	4'-0"				
2P607	102	12'-9"	1953	2	4'-5 3/8"	4'-2"	4'-5 3/8"				
2P608	8	10'-11"	131	2	4'-5 3/8"	2'-4"	4'-5 3/8"				
2P801	136	14'-11"	5417	2	1'-4"	12'-8"	1'-4"				
2P901	36	35'-9"	4376	1	1'-7"	34'-5"					
2P1001	56	15'-3"	3675	1	1'-10"	13'-9"					
2P1002	56	28'-5"	6848	STR							
2P1101	64	42'-2"	14338	1	2'-0"	40'-5					
2SP501	4	1034'-8"	4317	27	0'-3 3/8"	3'-6"	26'-0"				
		TOTAL:	51137	LBS.							

PYLON											
MARK	NUMBER TOTAL	LENGTH	WEIGHT (LBS.)	TYPE	DIMENSIONS						SER INC.
					A	B	C	D	E	R	
R401	28	5'-11"	111	STR							
R402	96	3'-0"	192	1	0'-8"	2'-5"					
R403	80	5'-8"	303	STR							
R404	16	5'-2"	55	STR							
R405	80	10'-4"	552	STR							
R406	192	5'-7"	716	STR							
R407	32	6'-6"	139	1	0'-11 1/2"	5'-7"					
R408	16	4'-9"	51	37	0'-9 1/2"	0'-10 1/2"	0'-10 1/2"	0'-6"	2'-0"		
R409	16	3'-5"	37	8	0'-10 1/2"	0'-8"	2'-0"				
R410	24	4'-9"	76	STR							
R411	16	1'-5"	15	1	0'-10"	0'-8"					
		TOTAL:	2247	LBS.							

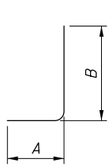

TYPE-1

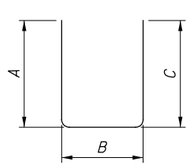

TYPE-2

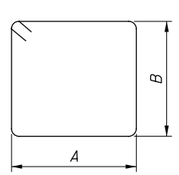

TYPE-3

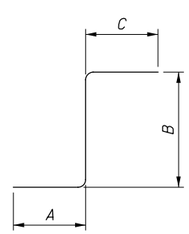

TYPE-8

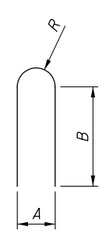

TYPE-24

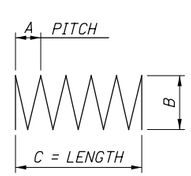

TYPE-27

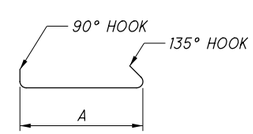

TYPE-34

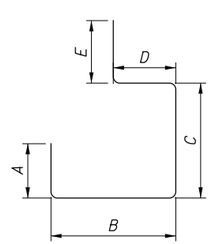

TYPE-37

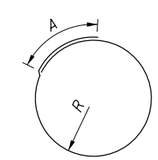

TYPE-38

NOTES:

1. SEE SHEET 97 FOR REINFORCING NOTES.

NO.	DATE	DESCRIPTION
0	2019-06-20	RFC

ISSUE RECORD

DESIGN AGENCY
Michael Baker INTERNATIONAL
1111 SUPERIOR AVE E., SUITE 2300, CLEVELAND, OH 44114

DESIGNED	DRAWN	REVIEWED	DATE
ABP	JCC	JWB	3/15/19
CHECKED	REVISED	STRUCTURE FILE NUMBER	
KAG		1801517	

RECORD PLANS

REINFORCING SCHEDULE (3 OF 5)
CUY-010-1976L
OH-10 WESTBOUND OVER GCRTA BLUE AND GREEN LINES

RECORD PLANS

CUY-IR490/SR010-2.09/19.28
PID No. 96833

RECORD PLANS

BU-19 - GCRTA BLUE/GREEN BRIDGES & CATENARY MODIFICATIONS
...\Sheets\010_1976L_SL501.dgn 6/27/2019 5:05:47 PM Christopher.Lemley

SUPERSTRUCTURE											
MARK	NUMBER TOTAL	LENGTH	WEIGHT (LBS.)	TYPE	DIMENSIONS						SER INC.
					A	B	C	D	E	R	
S401	690	30'-0"	13828	STR							
	1	6'-9"									
S402	SER. OF	TO	253	STR							1 13/16"
	39	12'-8"									
	1	6'-9"									
S403	SER. OF	TO	44	STR							4 1/2"
	8	9'-9"									
S404	124	34'-10"	2885	STR							
S405	496	30'-0"	9940	STR							
S406	124	25'-10"	2140	STR							
S501	737	30'-0"	23061	STR							
S502	784	25'-8"	20988	STR							
	1	7'-3"									
S503	SER. OF	TO	65	STR							1 1/2"
	8	8'-3"									
	1	7'-3"									
S504	SER. OF	TO	378	STR							10 1/16"
	22	25'-8"									
	1	4'-1"									
S505	SER. OF	TO	125	STR							9 7/16"
	13	14'-4"									
S506	749	15'-2"	11848	STR							
S507	1	17'-4"	18	STR							
S508	1547	21'-0"	33884	16	20'-5"						
	1	7'-10"			7'-3"						
S509	SER. OF	TO	70	16							1 1/2"
	8	8'-10"			8'-3"						
	1	8'-5"			7'-3"						
S510	SER. OF	TO	250	17							9 7/8"
	16	21'-7"			20'-5"						
	1	4'-8"			4'-1"						
S511	SER. OF	TO	246	16							9 13/16"
	19	20'-2"			19'-7"						
S512	2	24'-3"	51	16	23'-8"						
	1	25'-8"									
S513	SER. OF	TO	1459	STR							1 7/16"
	49	31'-5"									
	1	3'-9"									
S514	SER. OF	TO	202	STR							5 3/4"
	21	14'-8"									
	1	7'-3"									
S515	SER. OF	TO	601	STR							6 5/16"
	35	25'-8"									
	1	7'-3"									
S516	SER. OF	TO	106	STR							2 1/2"
	12	9'-9"									
	1	4'-4"			3'-9"						
S517	SER. OF	TO	389	16							6 7/16"
	30	20'-6"			19'-11"						
	1	8'-5"			7'-3"						
S518	SER. OF	TO	391	17							6 5/16"
	25	21'-7"			20'-5"						
	1	7'-10"			7'-3"						
S519	SER. OF	TO	111	16							2"
	12	9'-10"			9'-3"						

SUPERSTRUCTURE											
MARK	NUMBER TOTAL	LENGTH	WEIGHT (LBS.)	TYPE	DIMENSIONS						SER INC.
					A	B	C	D	E	R	
S520	2	28'-4"	59	16	27'-9"						
S521	396	7'-2"	2960	16	6'-7"						
S522	405	7'-2"	3027	16	6'-7"						
	1	10'-1"			7'-9"						
S523	SER. OF	TO	44	16							3 11/16"
	4	11'-0"			8'-9"						
	1	10'-0"			7'-9"						
S524	SER. OF	TO	82	16							5"
	7	12'-6"			10'-3"						
S525	18	14'-8"	275	STR							
S526	50	7'-2"	374	STR							
S527	12	13'-8"	171	STR							
S528	2	11'-3"	23	STR							
S529	112	30'-0"	3504	STR							
S530	4	17'-0"	71	STR							
S531	469	7'-4"	3587	23	0'-11"	3'-3"	3'-0"			0'-2 3/4"	
S532	440	9'-0"	4130	STR							
S533	444	2'-5"	1119	2	0'-10"	1'-0"	0'-10"				
S534	446	2'-9"	1279	2	0'-10"	1'-4"	0'-10"				
	1	4'-2"									
S535	SER. OF	TO	27	STR							1'-2 1/2"
	4	9'-0"									
S536	2	9'-8"	20	STR							
S537	20	12'-8"	264	STR							
S538	108	4'-8"	526	STR							
S539	68	11'-8"	827	STR							
S540	486	5'-9"	2915	2	2'-8"	0'-8"	2'-8"				
S541	4	11'-6"	48	STR							
S542	2	14'-6"	30	STR							
S543	18	4'-10"	91	2	0'-10"	3'-5"	0'-10"				
S544	18	8'-2"	153	2	2'-6"	3'-5"	2'-6"				
S545	18	10'-9"	202	21	2'-10"	2'-6"	0'-6"	2'-6"			
S546	24	4'-3"	106	STR							
S547	1	15'-3"	16	STR							
S548	1	12'-5"	13	STR							
S549	2	10'-4"	22	STR							
S550	2	3'-0"	6	STR							
S551	2	3'-10"	8	STR							
S552	4	9'-8"	40	STR							
S553	972	5'-8"	5745	1	1'-6"	4'-4"					
S554	NOT	USED									
S555	14	1'-2"	17	STR							
S556	14	1'-5"	21	STR							
S601	13	14'-8"	286	STR							
S602	25	7'-2"	269	STR							
S603	6	13'-8"	123	STR							
S604	1	12'-0"	18	STR							
S605	1	15'-0"	23	STR							
S606	469	2'-5"	1702	1	1'-0"	1'-7"					
S607	469	3'-1"	2172	28	1'-7"	0'-11"					
S608	1	1'-2"	2	STR							
S609	1	1'-5"	2	STR							
		TOTAL:	159732	LBS.							

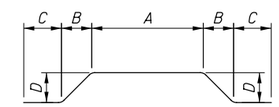

TYPE-21

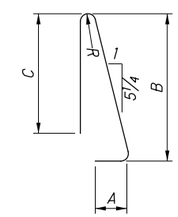

TYPE-23

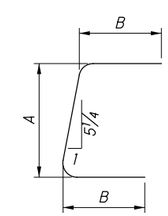

TYPE-28

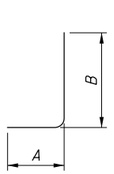

TYPE-1

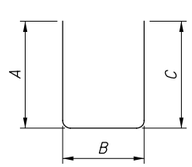

TYPE-2

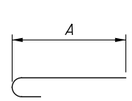

TYPE-16

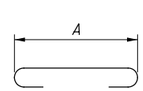

TYPE-17

NOTES:

1. SERIES BARS - EACH BAR VARIES BY TABULATED AMOUNT.
2. ALL DIMENSIONS ARE OUT TO OUT.
3. TYPE "STR" INDICATES STRAIGHT BAR.
4. THE BAR SIZE NUMBER IS SPECIFIED IN THE "MARK" COLUMN. THE FIRST DIGIT INDICATES THE BAR SIZE NUMBER. FOR EXAMPLE, EA501 IS A #5 BAR SIZE.
5. ALL BARS SHALL BE EPOXY COATED UNLESS NOTED OTHERWISE. SPECIFICALLY DIMENSIONED IN DETAILS.
6. SUBTOTALS AND TOTAL WEIGHTS ARE FOR INFORMATIONAL PURPOSES ONLY. IF THE REINFORCING LIST PROVIDED IN THE PLANS IS USED IT SHALL BE VERIFIED BY THE CONTRACTOR. ANY REVISIONS IN THE REINFORCING STEEL LIST AS SHOWN IN THE PLANS WILL NOT BE REASON FOR ADJUSTMENT IN THE BID PRICE FOR STRUCTURAL CONCRETE.
7. USE STANDAND HOOKS FOR ENDS OF BARS NOT SPECIFICALLY DIMENSIONED IN DETAILS.

NO.	DATE	DESCRIPTION
1	2020-06-10	DC041
0	2019-03-13	RFC

ISSUE RECORD

DESIGN AGENCY
Michael Baker INTERNATIONAL
1111 SUPERIOR AVE E., SUITE 2300, CLEVELAND, OH 44114

DESIGNED	DRAWN	REVIEWED	DATE
BAH	BAH	JWB	3/15/19
CHECKED	REVISED	STRUCTURE FILE NUMBER	
EKW		1801517	

RECORD PLANS

REINFORCING SCHEDULE (4 OF 5)
CUY-010-1976L
OH-10 WESTBOUND OVER GCRTA BLUE AND GREEN LINES

RECORD PLANS

CUY-IR490/SR010-2.09/19.28
PID No. 96833

BU-19 - GCRTA BLUE/GREEN BRIDGES & CATENARY MODIFICATIONS
...\Sheets\010_1976L_SL501.dgn 6/24/2020 8:12:27 AM David.Fell

REAR APPROACH SLAB BARS (FOR INFORMATION ONLY)

MARK	NUMBER TOTAL	LENGTH	WEIGHT (LBS.)	TYPE	DIMENSIONS A	B	C	D	E	R	SER INC.
SS501	38	6'-7"	261	STR							
	1	3'-6"									
SS502	SER. OF	TO	8	STR							7"
	2	4'-1"									
SS503	22	22'-9"	522	STR							
SS504	11	4'-11"	56	19	3'-5"	1'-4"	0'-10"				
SS505	3	3'-11"	12	19	3'-5"	0'-6"	0'-3"				
SS506	1	3'-0"	3	1	1'-7"	1'-6"					
SS507	38	6'-3"	248	30	0'-10"	1'-6 3/4"	1'-9"	1'-9"			
AS501	114	23'-9"	2824	STR							
AS502	4	4'-10"	20	19	3'-5"	1'-3"	0'-8"				
AS503	27	29'-8"	835	STR							
	1	29'-7"									
AS504	SER. OF	TO	63	STR							11"
	2	30'-6"									
AS505	17	10'-5"	185	STR							
AS506	1	10'-3"	11	19	9'-0"	1'-1 1/2"	0'-8"				
AS507	36	3'-1"	116	2	0'-10"	1'-8"	0'-10"				
	2	29'-7"									
AS508	SER. OF	TO	126	STR							1'-0"
	2	30'-7"									
AS509	30	5'-7"	175	2	2'-7"	0'-8"	2'-7"				
AS510	16	16'-5"	274	STR							
AS511	60	5'-6"	344	1	1'-6"	4'-1"					
AS512	32	7'-4"	245	23	0'-11"	3'-3"	3'-0"			0'-2 3/4"	
AS513	12	17'-1"	214	STR							
AS601	2	17'-6"	53	STR							
AS602	32	3'-1"	148	28	1'-7"	0'-11"					
AS603	32	2'-5"	116	1	1'-0"	1'-7"					
AS1001	65	30'-11"	8647	16	29'-6"						
	1	30'-1"			28'-8"						
AS1002	SER. OF	TO	393	16	TO						4"
	3	30'-9"			29'-4"						
	1	31'-3"			29'-10"						
AS1003	SER. OF	TO	408	16	TO						4"
	3	31'-11"			30'-6"						
SS515	2	8'-8"	18	STR							
SS517	10	7'-7"	79	30	0'-10"	1'-6 3/4"	2'-5"	2'-5"			
SS519	6	1'-8"	10	STR							
SS521	3	7'-4"	23	23	0'-11"	3'-3"	3'-0"			0'-2 3/4"	
SS601	1	1'-8"	3	STR							
SS603	3	3'-1"	14	28	1'-7"	0'-11"					
SS604	3	2'-5"	11	1	1'-0"	1'-7"					
		TOTAL:	16465	LBS.							

FORWARD APPROACH SLAB BARS (FOR INFORMATION ONLY)

MARK	NUMBER TOTAL	LENGTH	WEIGHT (LBS.)	TYPE	DIMENSIONS A	B	C	D	E	R	SER INC.
SS508	36	7'-11"	297	STR							
SS509	2	5'-2"	11	STR							
	1	6'-5"									
SS510	SER. OF	TO	15	STR							1'-2"
	2	7'-7"									
SS511	22	27'-3"	625	STR							
SS512	5	4'-8"	24	19	3'-5"	0'-11"	0'-11"				
SS513	5	4'-10"	25	19	3'-5"	1'-0"	1'-0"				
SS514	38	6'-6"	258	30	0'-10"	1'-10 1/8"	1'-9"	1'-9"			
AS512	NOT USED										
AS513	NOT USED										
AS514	96	28'-3"	2829	STR							
AS515	5	4'-10"	25	19	3'-5"	1'-0"	1'-0"				
	1	28'-0"									
AS516	SER. OF	TO	60	STR							1'-6"
	2	29'-6"									
AS517	29	29'-4"	887	STR							
	2	29'-1"									
AS518	SER. OF	TO	124	STR							1'-4"
	2	30'-5"									
AS519	15	12'-6"	196	STR							
AS520	30	3'-1"	96	2	0'-10"	1'-8"	0'-10"				
AS521	NOT USED										
AS522	32	5'-7"	186	2	2'-7"	0'-8"	2'-7"				
AS523	16	16'-7"	277	STR							
AS524	64	5'-6"	367	1	1'-6"	4'-1"					
AS525	30	7'-4"	229	23	0'-11"	3'-3"	3'-0"			0'-2 3/4"	
AS526	12	16'-3"	203	STR							
AS604	2	16'-7"	50	STR							
AS605	30	3'-1"	139	28	1'-7"	0'-11"					
AS606	30	2'-5"	109	1	1'-0"	1'-7"					
AS1004	65	30'-9"	8601	16	29'-4"						
	1	29'-5"			28'-0"						
AS1005	SER. OF	TO	387	16	TO						6 1/2"
	3	30'-6"			29'-1"						
	1	30'-9"			29'-4"						
AS1006	SER. OF	TO	403	16	TO						6"
	3	31'-9"			30'-4"						
SS516	2	10'-7"	22	STR							
SS518	12	7'-10"	98	30	0'-10"	1'-10 1/8"	2'-5"	2'-5"			
SS520	6	2'-1"	13	STR							
SS521	3	7'-4"	23	23	0'-11"	3'-3"	3'-0"			0'-2 3/4"	
SS602	1	2'-1"	3	STR							
SS603	3	3'-1"	14	28	1'-7"	0'-11"					
SS604	3	2'-5"	11	1	1'-0"	1'-7"					
		TOTAL:	16607	LBS.							

NOTES:

1. SERIES BARS - EACH BAR VARIES BY TABULATED AMOUNT.
2. ALL DIMENSIONS ARE OUT TO OUT.
3. TYPE "STR" INDICATES STRAIGHT BAR.
4. THE BAR SIZE NUMBER IS SPECIFIED IN THE "MARK" COLUMN. THE FIRST DIGIT INDICATES THE BAR SIZE NUMBER. FOR EXAMPLE, EA501 IS A #5 BAR SIZE.
5. ALL BARS SHALL BE EPOXY COATED UNLESS NOTED OTHERWISE.
6. SUBTOTALS AND TOTAL WEIGHTS ARE FOR INFORMATIONAL PURPOSES ONLY. IF THE REINFORCING LIST PROVIDED IN THE PLANS IS USED IT SHALL BE VERIFIED BY THE CONTRACTOR. ANY REVISIONS IN THE REINFORCING STEEL LIST AS SHOWN IN THE PLANS WILL NOT BE REASON FOR ADJUSTMENT IN THE BID PRICE FOR STRUCTURAL CONCRETE.
7. USE STANDAND HOOKS FOR ENDS OF BARS NOT SPECIFICALLY DIMENSIONED IN DETAILS.

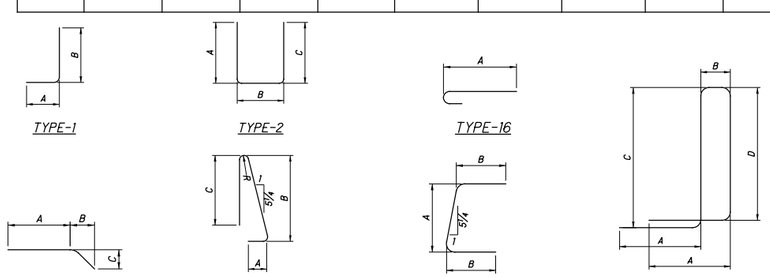

NO.	DATE	DESCRIPTION
1	2024-09-10	RECORD DRAWINGS
0	2019-06-20	RFC

ISSUE RECORD

DESIGN AGENCY
Michael Baker INTERNATIONAL
1111 SUPERIOR AVE E., SUITE 2300, CLEVELAND, OH 44114

DESIGNED	DRAWN	REVIEWED	DATE
JCC	JCC	JWB	3/15/19
CHECKED	REVISED	STRUCTURE FILE NUMBER	
ETB		1801517	

RECORD PLANS

REINFORCING SCHEDULE (5 OF 5)
CUY-010-1976L
OH-10 WESTBOUND OVER GCRTA BLUE AND GREEN LINES

RECORD PLANS

CUY-IR490/SR010-2.09/19.28
PID No. 96833

RECORD PLANS

46/46

101/110

BU-19 - GCRTA BLUE/GREEN BRIDGES & CATENARY MODIFICATIONS
...\Sheets\010_1976L_SL501.dgn 11/21/2024 4:49:51 PM Rohit.Bk

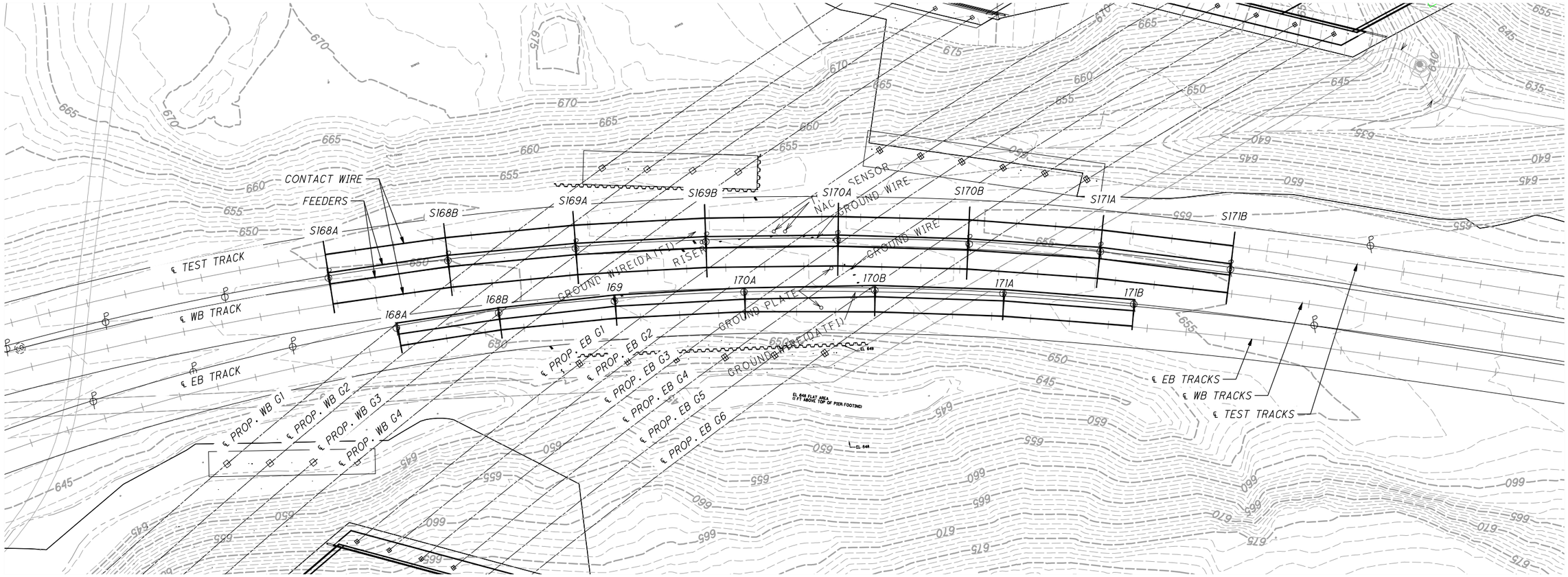

PROPOSED OC BLVD. EB/WB BRIDGES OVER EXISTING GCRTA LINE - PLAN VIEW

PROPOSED WORK:

- PROPOSED REMOVAL OF TOPS OF POLE ABOVE EXISTING FEEDER ARMS AS NECESSARY TO CLEAR NEW STRUCTURES CARRYING OC BLVD. OVER GCRTA BLUE AND GREEN LINES AND TEST TRACK.

- CATENARY LINES TO REMAIN UNDISTURBED.

NO.	DATE	DESCRIPTION
0	2019-06-20	RFC

ISSUE RECORD

HORIZONTAL SCALE IN FEET 0 20 40 80

CALCULATED LWH
CHECKED JWA

RECORD PLANS

GCRTA BLUE & GREEN LINES - PLAN
STA. 164+31 TO STA. 171+60

RECORD PLANS

CUY-IR490 / SR010-
2.09 / 19.28

RECORD PLANS

C:\pwv8i-local\baker_projects\luke.hacker\d0596301\96833_BU007.dwg 28-Jun-19 2:42 PM

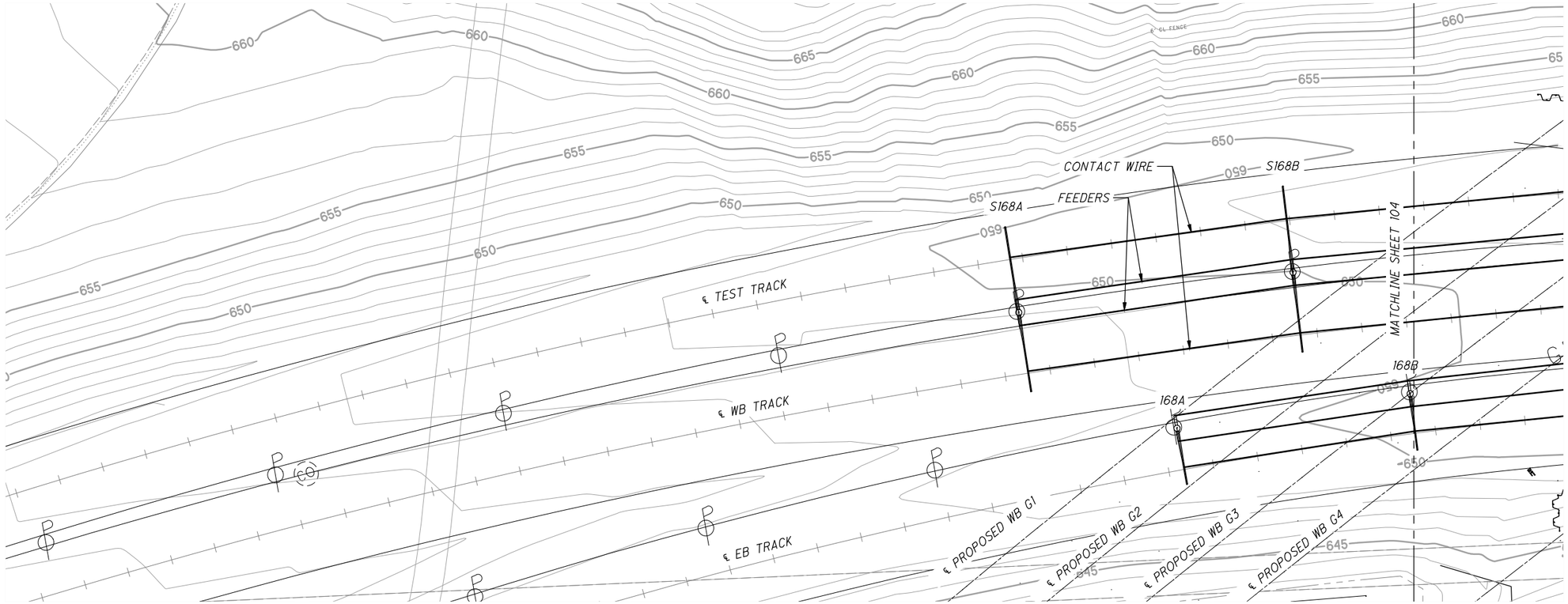

PROPOSED OC BLVD. EB/WB BRIDGES OVER EXISTING GCRTA LINE - PLAN VIEW

NO.	DATE	DESCRIPTION
0	2019-06-20	RFC

ISSUE RECORD

HORIZONTAL SCALE IN FEET 0 10 20 40

CALCULATED LWH
CHECKED JWA

RECORD PLANS

GCRTA BLUE & GREEN LINES - PLAN
S168A TO S169B

RECORD PLANS

CUY-IR490 / SR010-2.09 / 19.28

RECORD PLANS

2 / 9

103 / 110

C:\pwv8i-local\baker_projects\luke.hacker\d0596301\96833_BU007.dwg 28-Jun-19 2:44 PM

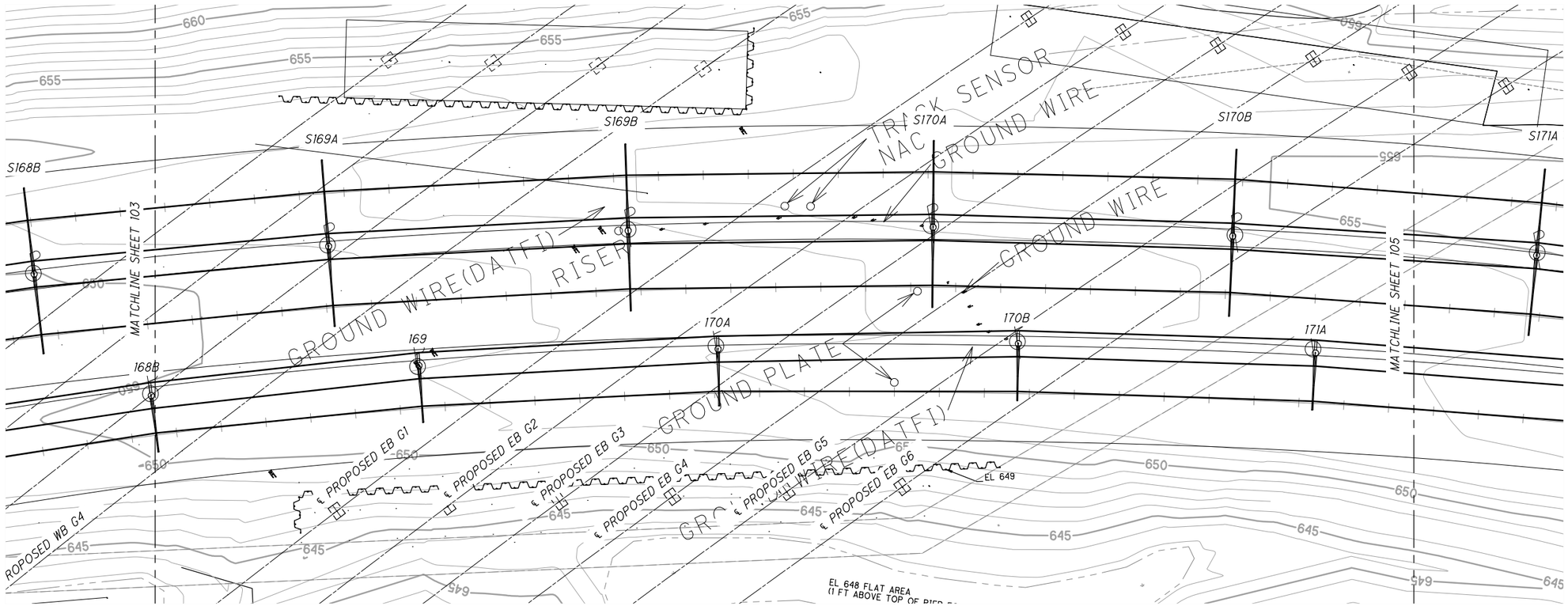

PROPOSED OC BLVD. EB/WB BRIDGES OVER EXISTING GCRTA LINE - PLAN VIEW

NO.	DATE	DESCRIPTION
0	2019-06-20	RFC

ISSUE RECORD

HORIZONTAL SCALE IN FEET 0 10 20 40

CALCULATED LWH
CHECKED JWA

RECORD PLANS

GCRTA BLUE & GREEN LINES - PLAN
S169B TO S171A

RECORD PLANS

CUY-IR490 / SR010-2.09 / 19.28

RECORD PLANS

C:\pw48-local\baker_projects\luke.hacker\d0596301\96833_BU007.dwg 28-Jun-19 2:48 PM

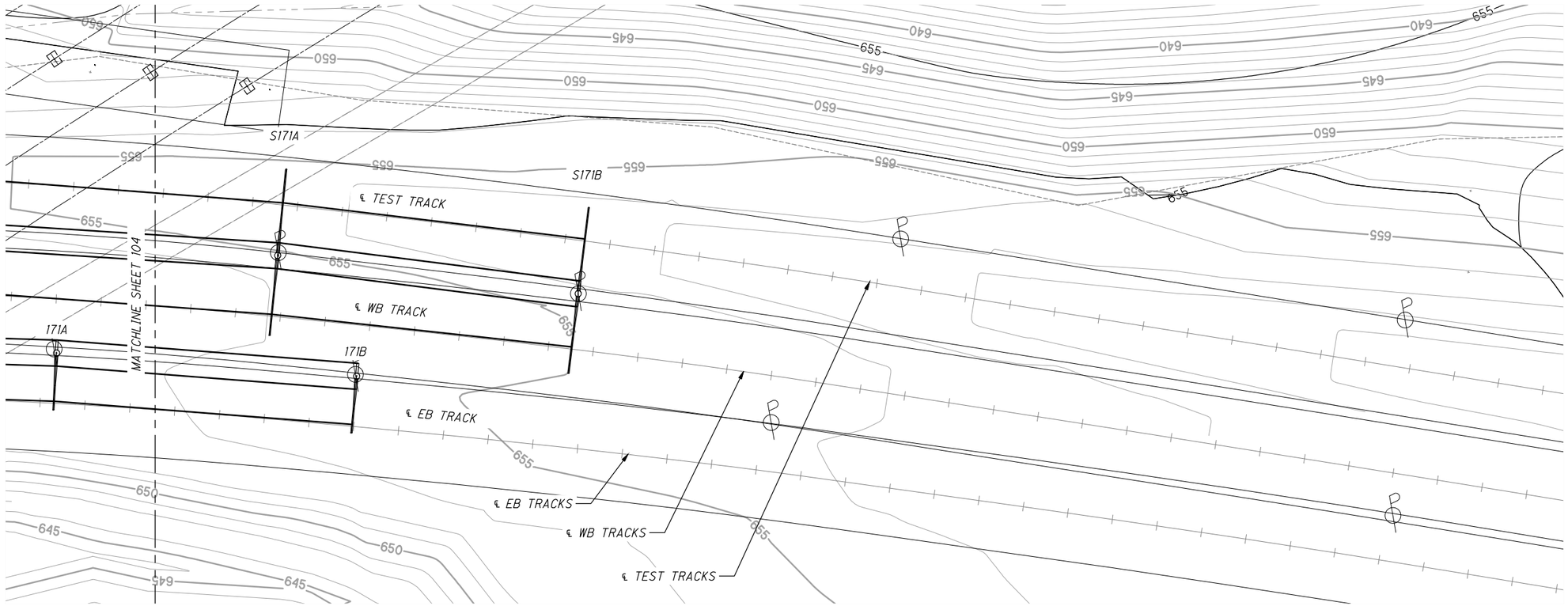

PROPOSED OC BLVD. EB/WB BRIDGES OVER EXISTING GCRTA LINE - PLAN VIEW

NO.	DATE	DESCRIPTION
0	2019-06-20	RFC

ISSUE RECORD

HORIZONTAL SCALE IN FEET 0 10 20 40

CALCULATED LWH
CHECKED JWA

RECORD PLANS

GCRTA BLUE & GREEN LINES - PLAN
S171A TO S171B

CUY-IR490 / SR010-2.09 / 19.28

RECORD PLANS

4 / 9

105 / 110

C:\pw:8i-local\baker_projects\luke.hacker\d0596301\96833_BU007.dwg 28-Jun-19 2:50 PM

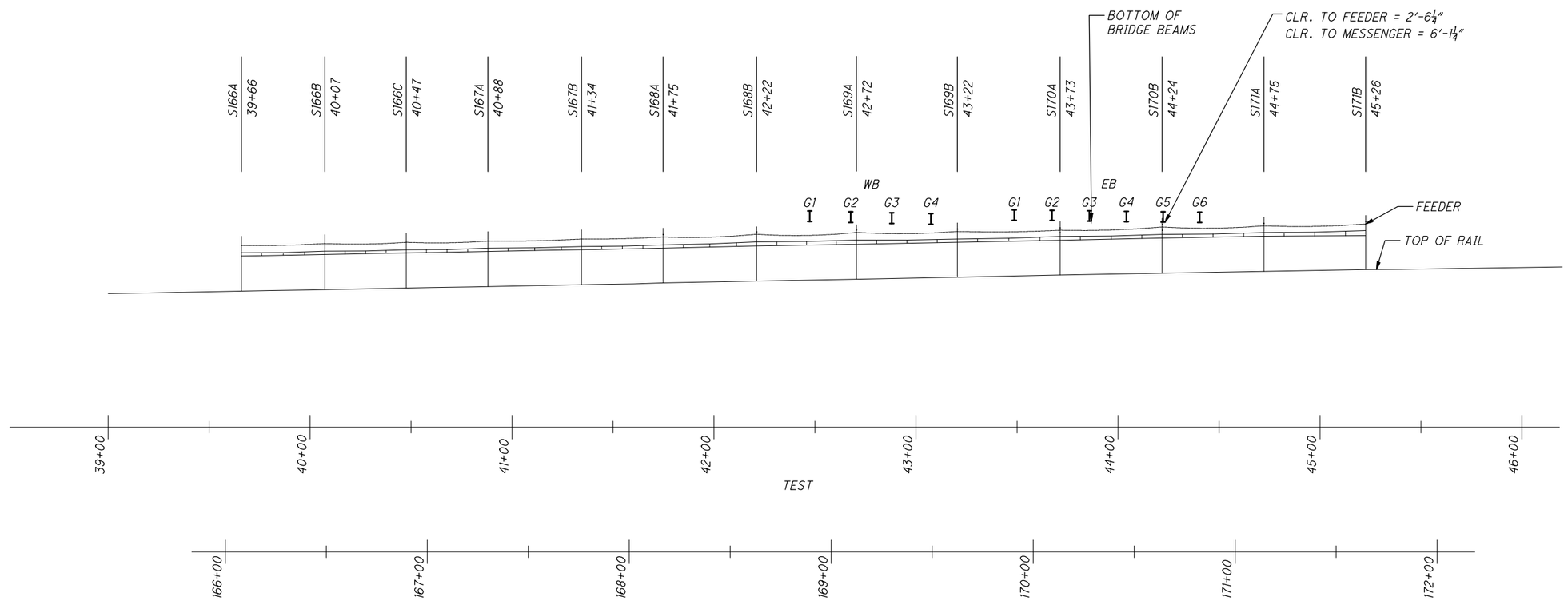

CATENARY SYSTEM ELEVATIONS - TEST TRACK						
STRUCTURE NO	TOR	CONTACT WIRE	MESSENGER WIRE	FEEDER CABLE (APPROX.)	CONTACT WIRE HEIGHT	SYSTEM HEIGHT
S168A	650.74	667.90	669.50	673.58	17.16'	1.60'
S168B	651.59	669.00	671.00	674.93	17.41'	2.00'
S169A	652.50	669.80	671.90	675.83	17.30'	2.10'
S169B	653.53	670.80	672.40	676.33	17.27'	1.60'
S170A	654.58	671.80	673.70	676.93	17.22'	1.90'
S170B	655.50	672.90	674.70	678.53	17.40'	1.80'
S171A	656.41	673.80	675.60	679.13	17.39'	1.80'
S171B	657.34	674.10	676.60	680.03	16.76'	2.50'

NO.	DATE	DESCRIPTION
0	2019-06-20	RFC

ISSUE RECORD

CALCULATED LWH
CHECKED JWA

0 30 60 120
HORIZONTAL SCALE IN FEET

RECORD PLANS

GCRTA BLUE & GREEN LINES - PROFILES
TEST TRACK CATENARY PROFILE

RECORD PLANS

CUY-IR490 / SR010-2.09 / 19.28

RECORD PLANS

5 / 9

106 / 110

C:\pw8i-local\baker_projects\luke.hacker\d0596301\96833_BU007.dwg 28-Jun-19 2:52 PM

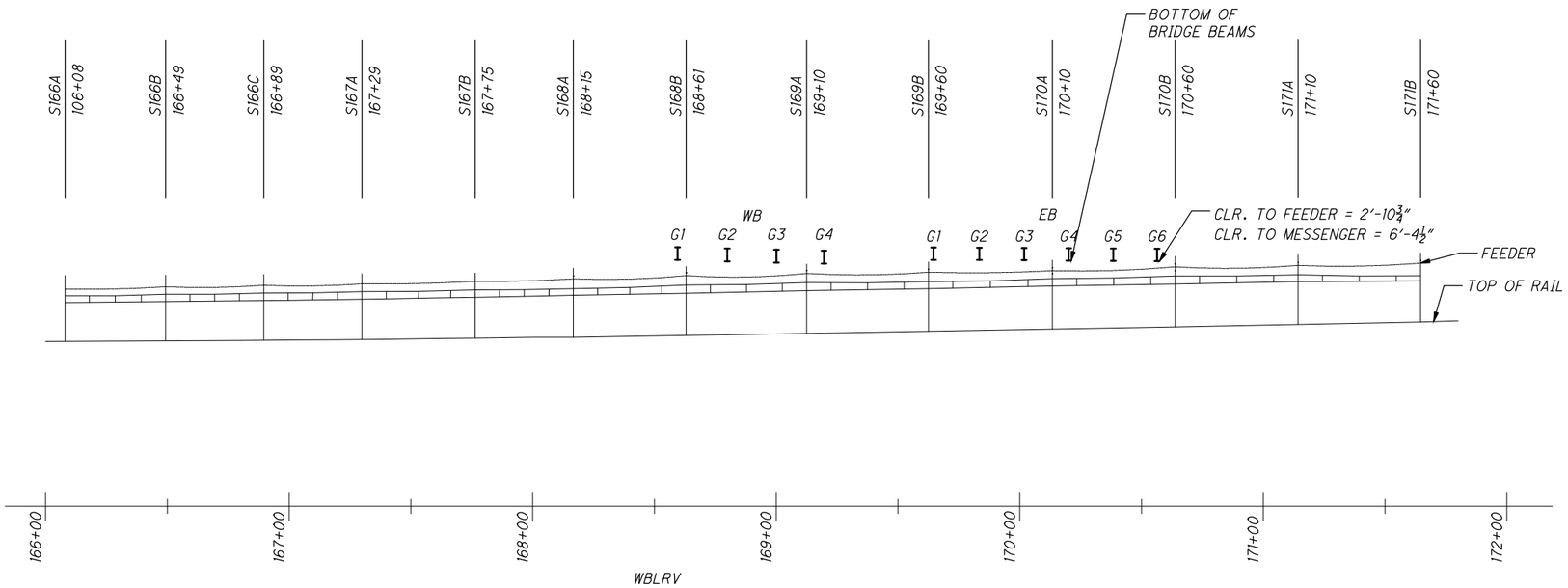

CATENARY SYSTEM ELEVATIONS - WB TRACK						
STRUCTURE NO	TOR	CONTACT WIRE	MESSENGER WIRE	FEEDER CABLE (APPROX.)	CONTACT WIRE HEIGHT	SYSTEM HEIGHT
S168A	649.37	666.70	669.40	673.58	17.33'	2.70'
S168B	650.17	667.50	670.90	674.93	17.33'	3.40'
S169A	651.02	668.60	671.90	675.83	17.58'	3.30'
S169B	651.89	669.40	672.30	676.33	17.51'	2.90'
S170A	652.78	670.50	673.50	676.93	17.72'	3.00'
S170B	653.73	671.30	674.60	678.53	17.57'	3.30'
S171A	654.72	672.30	675.10	679.13	17.58'	2.80'
S171B	655.69	672.60	674.70	680.03	16.91'	2.10'

NO.	DATE	DESCRIPTION
0	2019-06-20	RFC

ISSUE RECORD

HORIZONTAL SCALE IN FEET 0 30 60 120

CALCULATED LWH
CHECKED JWA

RECORD PLANS

GCRTA BLUE & GREEN LINES - PROFILES
WESTBOUND CATENARY PROFILE

RECORD PLANS

CUY-IR490 / SR010-2.09 / 19.28

RECORD PLANS

C:\pwv8i-local\baker_projects\luke.hacker\d0596301\96833_BU007.dwg 28-Jun-19 2:54 PM

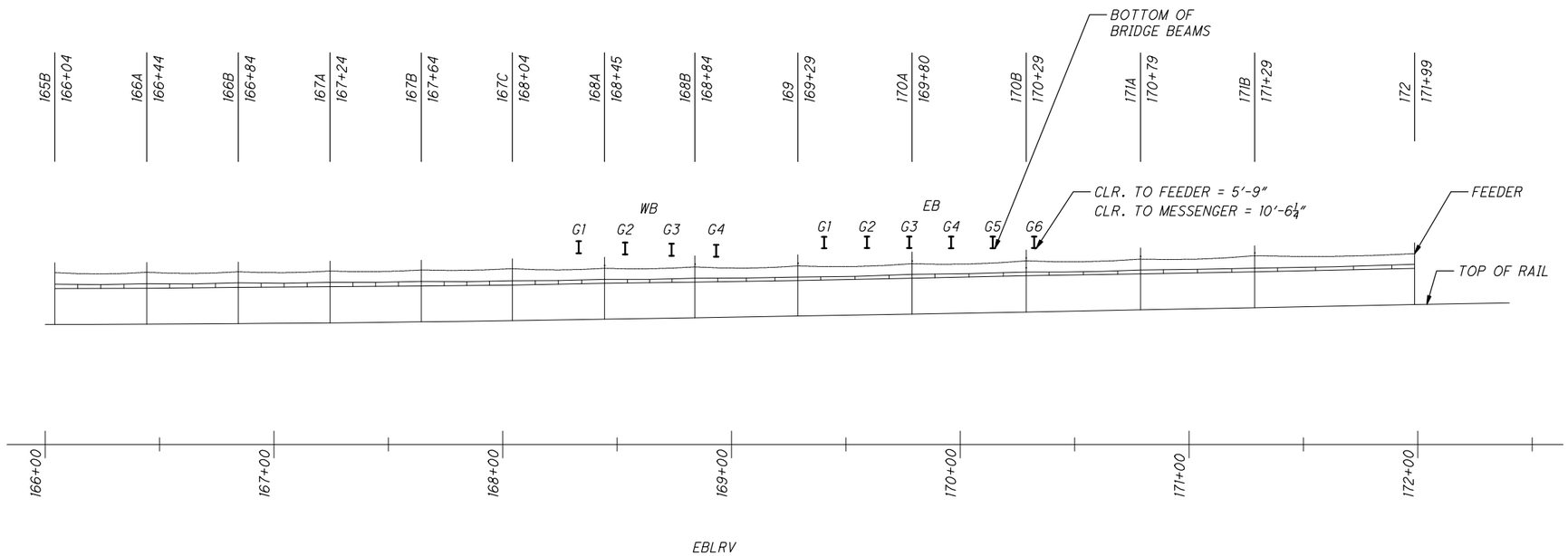

CATENARY SYSTEM ELEVATIONS - EB TRACK						
STRUCTURE NO	TOR	CONTACT WIRE	MESSENGER WIRE	FEEDER CABLE (APPROX.)	CONTACT WIRE HEIGHT	SYSTEM HEIGHT
168A	650.14	665.80	667.50	672.53	15.66′	1.70′
168B	650.75	666.30	668.00	673.13	15.55′	1.70′
169	651.48	667.00	668.50	673.55	15.52′	1.50′
170A	652.32	668.00	669.70	674.53	15.68′	1.70′
170B	653.22	669.10	670.70	675.78	15.88′	1.60′
171A	654.17	669.90	671.60	676.53	15.73′	1.70′
171B	655.11	670.80	672.40	678.03	15.69′	1.60′

NO.	DATE	DESCRIPTION
0	2019-06-20	RFC

ISSUE RECORD

0 30 60 120
HORIZONTAL SCALE IN FEET

CALCULATED LWH
CHECKED JWA

RECORD PLANS

GCRTA BLUE & GREEN LINES - PROFILES
EASTBOUND CATENARY PROFILE

RECORD PLANS

CUY-IR490 / SR010-2.09 / 19.28

RECORD PLANS

C:\pw:8i-local\baker_projects\luke.hacker\d0596301\96833_BU007.dwg 28-Jun-19 2:58 PM

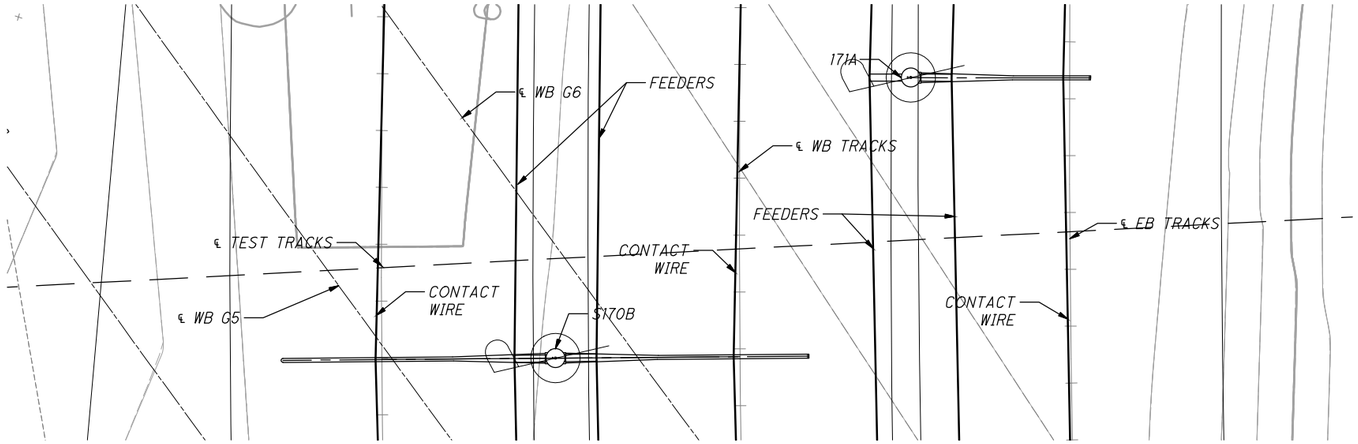

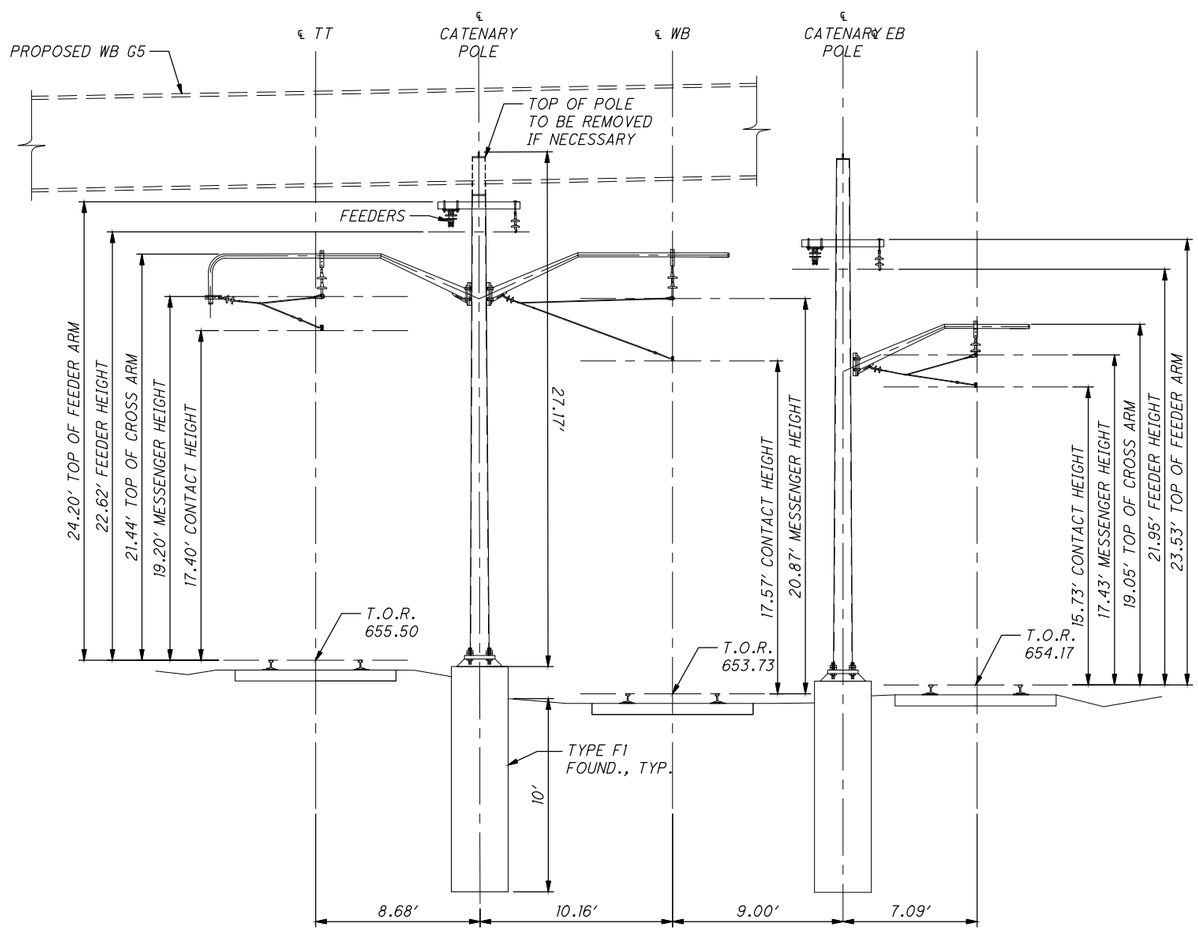

NO.	DATE	DESCRIPTION
0	2019-06-20	RFC

ISSUE RECORD

HORIZONTAL SCALE IN FEET 0 4 8 16

CALCULATED LWH
CHECKED JWA

RECORD PLANS

GCRTA BLUE & GREEN LINES - SECTIONS
S 170B AT STATION 171+60

CUY-IR490 / SR010-2.09 / 19.28

RECORD PLANS

8 / 9

109 / 110

C:\pw8i-local\baker_projects\luke.hacker\d0596301\96833_BU007.dwg 28-Jun-19 3:03 PM

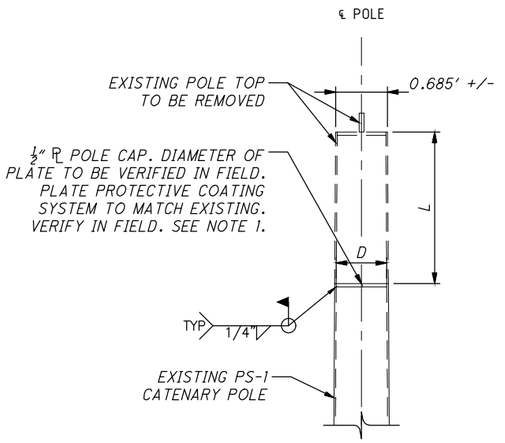

TYPICAL TOP OF CATENARY POLE MODIFICATION DETAIL

POLE MODIFICATION TABLE		
STRUCTURE NO.	"L"	"D"
S170A	1'-0"	0'-8"
S170B*	2'-6"	0'-8"
170B	1'-0"	0'-8"
-	-	-

* POLE TOP WILL BE BETWEEN GIRDERS G5 & G6 (EB BRIDGE). REMOVE TOP OF POLE IF FRAMING/DIAPHRAGM IS IN CONFLICT WITH POLE.

NOTES:

1. POLE CAP PLATE FINISH SHALL MATCH THAT OF THE EXISTING POLE. IF POLE IS PROTECTED WITH WEATHERING STEEL, CAP SHALL BE FABRICATED OUT OF ASTM A588 GRADE WEATHERING STEEL. IF THE POLE IS PROTECTED WITH PAINT, THE FOLLOWING PROCEDURE SHALL BE FOLLOWED FOR REPAIR:
   - 1.1. ALL SURFACES DAMAGED DURING POLE MODIFICATION SHALL BE THOROUGHLY CLEANED AND REPAIRED. EXISTING SURFACES SHALL BE PROTECTED WHEN POSSIBLE.
   - 1.2. ALL DAMAGED SURFACES ARE TO BE HAND OR POWER TOOL CLEANED AND THEN SOLVENT CLEANED.
   - 1.3. AFTER PROPER CLEANING, APPLY PRIMER COATING.
   - 1.4. APPLY FINAL PROTECTIVE PAINT COATING. A UNIFORM THICKNESS OF PAINT SHALL BE APPLIED WHEN POSSIBLE AND BE BLENDED IN WITH EXISTING PAINT.
   - 1.5. PAINT AND PRIMER TYPE AND COLOR ARE TO BE PROVIDED BY GCRTA.

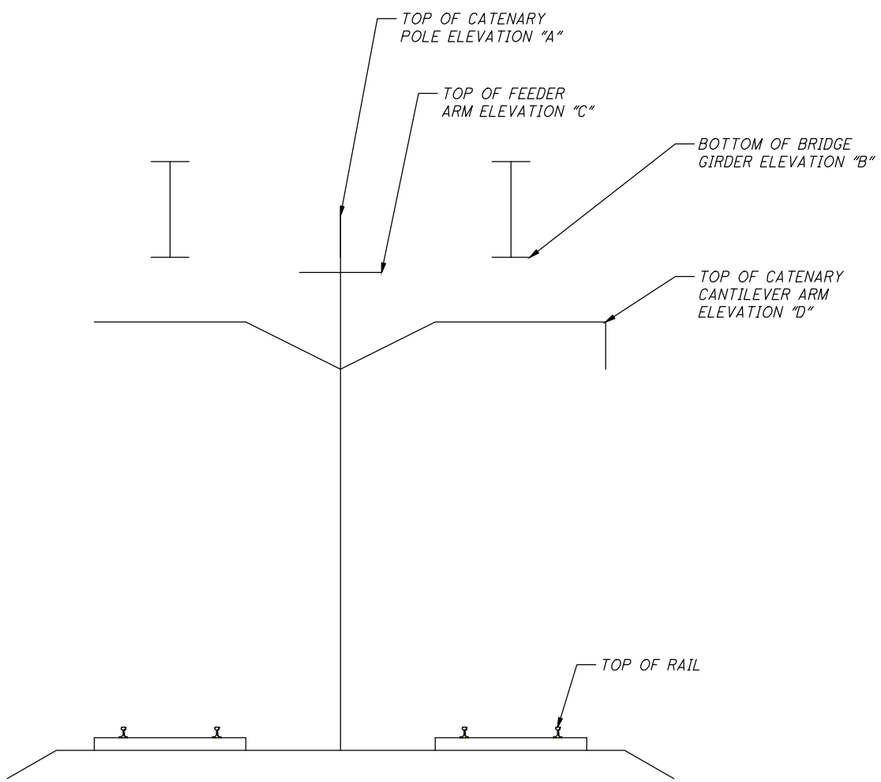

CATENARY CLEARANCE DIAGRAM
N.T.S.

CATENARY CLEARANCES							
STRUCTURE NO.	"A"	"B"	"C"	"D"	CLEARANCE 1 (FT.) (NOTE 1 & 2)	CLEARANCE 2 (FT.) (NOTE 4)	CLEARANCE 3 (FT.) (NOTE 5)
S169A	679.50	680.13	677.00	674.19	0.63	3.13	5.94
S170A	681.10	680.95	678.10	676.10	-0.15	2.85	4.85
S170B	682.70	680.81	679.70	677.09	-1.89	1.11	3.72
168A	677.20	678.92	673.70	671.89	1.72	5.22	7.03
168B	677.80	679.70	674.30	672.49	1.90	5.40	7.21
170A	679.50	681.18	675.70	674.19	1.68	5.48	6.99
170B	680.45	680.90	676.95	673.00	0.45	3.95	7.90

NOTES:

1. CLEARANCE DIMENSIONS GIVEN ARE THE CLEARANCE FROM THE BOTTOM OF THE NEAREST BRIDGE GIRDER TO THE TOP OF THE CATENARY POLE STRUCTURE.
2. NEGATIVE VALUES REPRESENT AN OVERLAP IN THE PROPOSED GIRDER AND TOP OF EXISTING CATENARY POLE. SEE CATENARY POLE MODIFICATION DETAIL THIS SHEET.
3. ALL ELEVATIONS SHOWN ARE FROM EXISTING SURVEY DATA.
4. CLEARANCE DIMENSIONS FOR BOTTOM OF NEAREST BRIDGE GIRDER TO TOP OF FEEDER ARM.
5. CLEARANCE DIMENSIONS FOR BOTTOM OF NEAREST BRIDGE GIRDER TO TOP OF CATENARY CANTILEVER ARM.

NO.	DATE	DESCRIPTION
0	2019-06-20	RFC

ISSUE RECORD

HORIZONTAL SCALE IN FEET 0 1 2 4

CALCULATED LWH
CHECKED JWA

RECORD PLANS

GCRTA BLUE & GREEN LINES - DETAILS
SHEET 1

RECORD PLANS

CUY-IR490 / SR010-2.09 / 19.28

RECORD PLANS

9 / 9

110 / 110

C:\pw8i-local\baker_projects\luke.hacker\d0596301\96833_BU007.dwg 28-Jun-19 3:05 PM

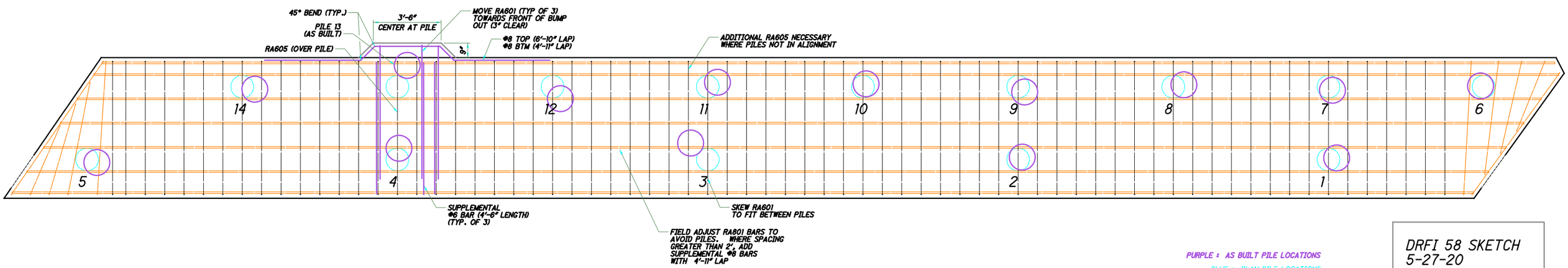

DRFI 58 SKETCH
5-27-20

DRILLED HOLES IN CONCRETE ARE TO BE CLEANED OUT WITH COMPRESSED AIR.

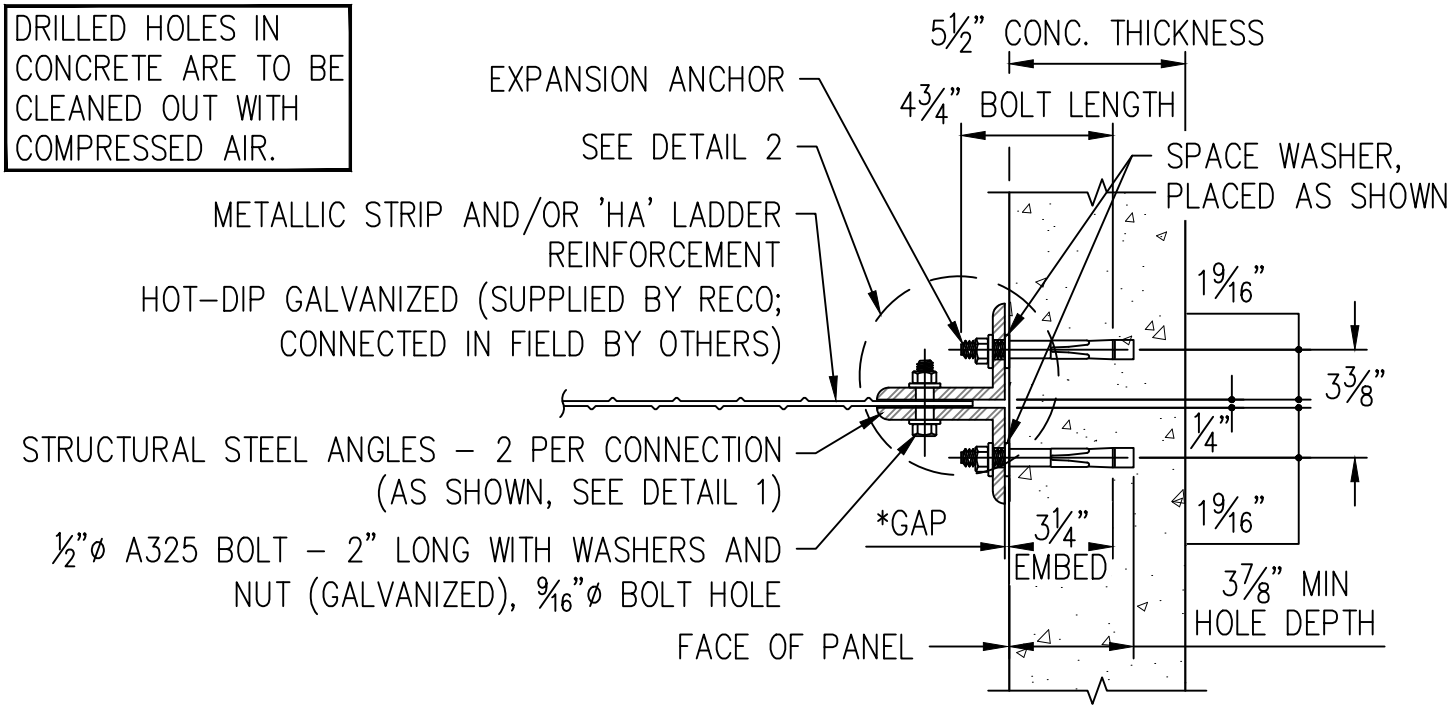

*GAP PROVIDED BETWEEN BACK FACE OF THE EXISTING WALL AND PROPOSED CONNECTION ANGLE SHALL BE ACHIEVED BY PLACING AN ADDITIONAL WASHER (AS SHOWN).

TIE STRIP REPLACEMENT CONNECTION ASSEMBLY

EACH DOUBLE CLIP ANGLE CONNECTION SHALL REQUIRE THE FOLLOWING STANDARD PART:

- (2) – ⅜"X4"X3"X3" UNEQUAL LEG ANGLES – RECo PART # CLP2
- (1) – ½"ø–13NC X 2" LONG – RECo PART # BL02
- (2) – MECHANICAL EXPANSION ANCHOR ⅝"ø X 4¾" KWIK BOLT–3 (HDG)
  – RECo PART # KB3G58475 (each set shall contain anchor body, nut and two (2) washers).

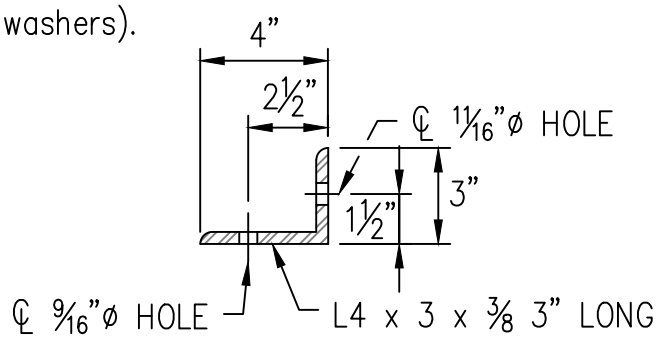

DETAIL 1

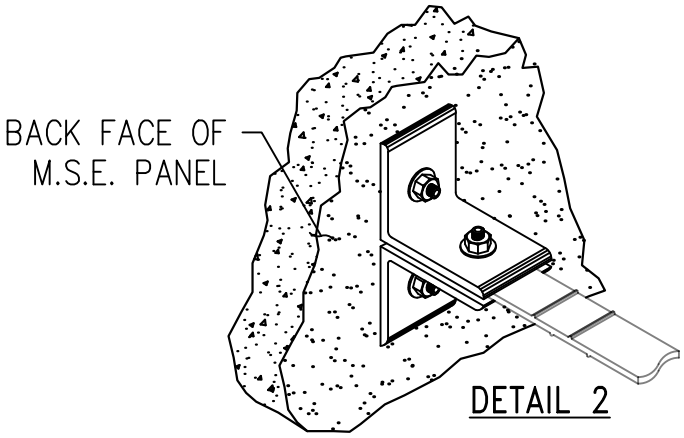

DETAIL 2

NOTE TO THE CONTRACTOR:

IN THE EVENT THAT A REINFORCING STRIP CANNOT BE SKEWED PER PLANS, THE STRIP MAY BE RELOCATED BY USING THE ABOVE CONNECTION ASSEMBLY WITH PROPER DIRECTION FROM RECo. PANEL–SPECIFIC CONNECTION LOCATIONS SHALL BE COORDINATED WITH RECo's ENGINEERING DEPARTMENT. CONTRACTOR SHALL CONTACT THE "RECo" PROJECT MANAGER TO OBTAIN THE NECESSARY PARTS.

ASSEMBLY DRAWING

CLIPKB3G

DATE: 06/24/2019

Protection of Technology – (MCNDS) "Mutual Confidential Non–Disclosure Statement" between The Reinforced Earth® Company (RECo), and all parties in receipt of details, and/or designs, proposed, and/or prepared by RECo, it shall hereby be understood that said information is classified as "Protected Technology".Therefore, any and all parties collectively shall desire to keep confidential all listed parts, details and designs from unauthorized disclosure.
This statement covers the restriction of disclosure to those employees of the receiving parties having a need to know such information; in order to accomplish the purpose stated above. This statement shall be governed by and interpreted in accordance with the Laws of the United States and Canada. The rights and obligations of the parties covered under this statement may not be sold, assigned or otherwise transferred. RECo acknowledges that details and information indicated on this sheet, covering the parts described, was obtained from technical information provided by the manufacture said parts. However, the described parts may interrelate to any and all proposed connections designed and/or detailed by RECo.

REINFORCED EARTH®
SUSTAINABLE TECHNOLOGY
12001 Sunrise Valley Drive, Suite 400, Reston, VA 20191 www.reinforcedearth.com

"REINFORCED EARTH®" IS THE REGISTERED TRADE MARK OF THE REINFORCED EARTH COMPANY.

INSTALLATION NOTES

IF THE PROJECT REQUIRES A MINIMUM DESIGN SERVICE LIFE OF 100 YEARS, THE FOLLOWING CONDITION SHOULD BE REALIZED AND UNDERSTOOD: THE STANDARD SPACING BETWEEN THE CONNECTION ANGLES AS SHOWN ON SHEET 1 OF 3 DOES NOT ALLOW FOR THE NON-CORROSIVE 'SANDWICHING EFFECT BETWEEN THE TWO (2) CONN. ANGLES AND THE REINFORCEMENT STRIP. TO ACHIEVE THIS THE INSTALLING CONTRACTOR SHALL FOLLOW THE DESCRIBED INSTALLATION PROCESS:

a. LOCATE, ALIGN AND INSTALL THE LOWER CONNECTION ANCHOR & ANGLE AS REQUIRED.
b. CREATE A SPACER GAGE WITH A SHORT CUT-OFF LENGTH (e.g., 6"± IN LENGTH) OF REINFORCEMENT STRIP INCLUDING THE $\frac{9}{16}$"ø CONNECTION HOLE
c. PLACE THE SPACER GAGE STRIP ON TOP OF THE ALREADY INSTALLED LOWER ANGLE.
d. PLACE THE TOP CONN. ANGLE ON TOP OF THE SPACER STRIP, BOLT THE TWO (2) ANGLES AND THE STRIP TOGETHER USING THE PROVIDED BOLT ASSEMBLY AND HAND TIGHTEN.
e. MARK THE TOP ANGLE AT LOCATION OF THE $\frac{11}{16}$"ø HOLE ON THE REAR FACE OF PANEL AND/OR BACK OF ABUTMENT.
f. DISASSEMBLE THE ASSEMBLY. SETTING THE UPPER ANGLE ASIDE, INSTALL THE REQUIRED CONNECTION EXPANSION ANCHOR AT THE MARK MADE.
g. INSTALL THE UPPER CONNECTION ANGLE, PLACE THE REQUIRED REINFORCING STRIP PER DESIGN, RE-INSTALL THE ASSEMBLY AND TIGHTEN TO THE REQUIRED TORQUE.

NOTE TO THE ERECTION CONTRACTOR:
DRILLED HOLES IN CONCRETE ARE TO BE CLEANED OUT USING COMPRESSED AIR.

WHENEVER POSSIBLE RECo DOES HEREBY REQUEST THAT THE ERECTION CONTRACTOR USE PRODUCTS MANUFACTURED BY "HILTI, Inc. (USA)", OR AN "APPROVED EQUAL". PRODUCTS FROM ANY OTHER MANUFACTURER MAY BE PROPOSED. HOWEVER, PRIOR TO MAKING ANY CONNECTIONS, DOCUMENTS SHALL BE SUPPLIED TO RECo FOR REVIEW AND APPROVAL, COVERING THE FOLLOWING, BUT NOT LIMITED TO:

- CALCULATIONS PREPARED AND SIGNED BY A P.E.
- CODE SPECIFICATIONS AND REQUIREMENTS
- PRODUCT DESCRIPTION
- MATERIAL SPECIFICATIONS
- TECHNICAL DESIGN DATA
- MATERIAL SAFETY DATA (MSDS's)
- INSTALLATION PROCEDURES

CAUTION: WHEN INSTALLING THIS ANCHOR (AS INDICATED), THE ERECTION CONTRACTOR MUST TAKE CARE AS NOT TO APPLY UNNECESSARY HAMMERING FORCE, THIS MAY RESULT IN SPALLING OF THE CONCRETE ALONG THE FRONT FACE OF THE PRECAST FACING PANEL.

ASSEMBLY DRAWING

MECHANICAL EXPANSION ANCHOR SYSTEMS

As Per RECo's Design Technical Memo No. 2012-07
(Revised and Reissued 2019-03)

CLIPKB3G

DATE: 06/24/2019

Protection of Technology – (MCNDS) "Mutual Confidential Non-Disclosure Statement" between The Reinforced Earth® Company (RECo), and all parties in receipt of details, and/or designs, proposed, and/or prepared by RECo, it shall hereby be understood that said information is classified as "Protected Technology".Therefore, any and all parties collectively shall desire to keep confidential all listed parts, details and designs from unauthorized disclosure.
This statement covers the restriction of disclosure to those employees of the receiving parties having a need to know such information; in order to accomplish the purpose stated above. This statement shall be governed by and interpreted in accordance with the Laws of the United States and Canada. The rights and obligations of the parties covered under this statement may not be sold, assigned or otherwise transferred. RECo acknowledges that details and information indicated on this sheet, covering the parts described, was obtained from technical information provided by the manufacture said parts. However, the described parts may interrelate to any and all proposed connections designed and/or detailed by RECo.

REINFORCED EARTH®
SUSTAINABLE TECHNOLOGY
12001 Sunrise Valley Drive, Suite 400, Reston, VA 20191 www.reinforcedearth.com

"REINFORCED EARTH®" IS THE REGISTERED TRADE MARK OF THE REINFORCED EARTH COMPANY.

Bevel Table	
A	C
1-5/16"	1-11/16"

Checked By	Neil Spears
Drawn By	Brodie Spears

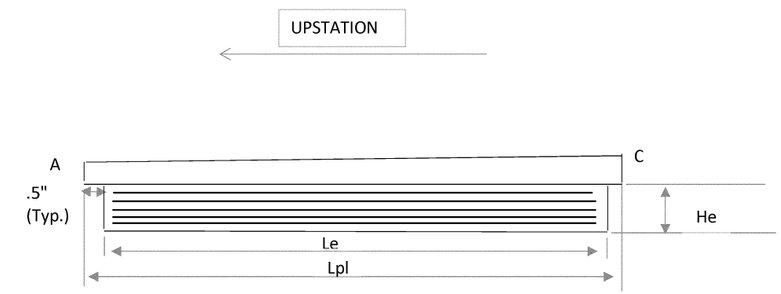

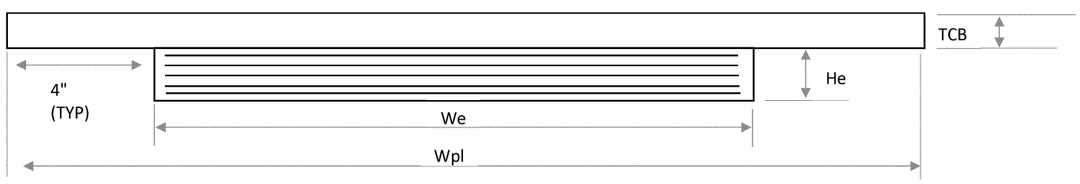

The elastomer shall have a hardness of 50 Durometer. The bearings were designed in accordance with section 14.7.6 (method A) of the AASHTO LRFD bridge design specifications. The long-term compression proof load test (AASHTO standard specifications for highway bridges, Division II, section 18.7.2.6) is not required.

The steel load plate shall be ASTM A709 grade 50 steel and shall be coated in accordance with items 513 and 514. (Dimecote 9 liquid and Dimecote 9 Series Powder)

The steel load plate shall be bonded by vulcanization to the elastomer during the molding process.

Each bearing assembly shall be shop marked with the following information: top, forward station direction, location (rear abutments, Pier 1, Pier 2, or forward Abutments) and beam number. All bearings shall be marked prior to shipping. the marks shall include the bearing location on the bridge, and a direction arrow that points up-station. all marks shall be permanent and be visible after the bearing is installed.

Anchor rods shall be ASTM F1554, Grade 105. Nuts shall conform to ASTM A563 for appropriate grade and size of anchor bolt. Washers shall confom to ASTM F436.

P =Number of Steel Laminates per Bearing
t= steel laminate thickness = .0747"
te = external elastomer layer thickness (1 ea.)
ti = internal elastomer layer thickness (5 ea.)

BEARING LOCATION	NO. REQ'D	Le	We	He	te	ti	P	Lpl	Wpl	TCB					
Forward AB	4	14"	16"	3.12"	1/4"	1/2"	5	15"	24"	1-1/2"					

BRIDGE COMPONENTS INDUSTRIES, LLC

CONTRACTOR:	Kokosing
COUNTY:	Cuyahoga
Bridge #:	CUY-010-1976L
PROJECT:	ODOT 3000-17
Date:	2/19/2020
Drawing Number	Brodot 3000-17
Page	1 of 4

Bevel Table	
A	C
1-9/32"	1-23/32"

Checked By	Neil Spears
Drawn By	Brodie Spears

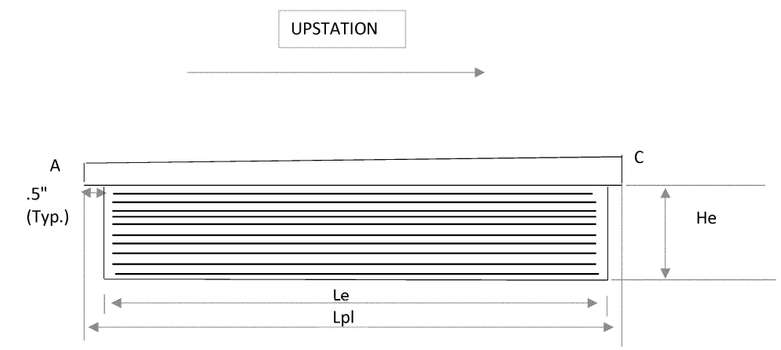

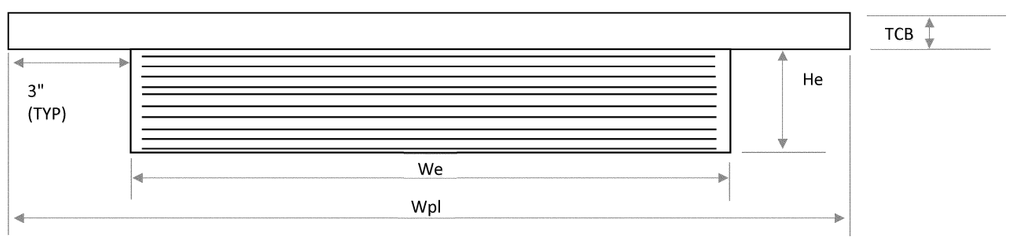

The elastomer shall have a hardness of 50 Durometer. The bearings were designed in accordance with section 14.7.6 (method A) of the AASHTO LRFD bridge design specifications. The long-term compression proof load test (AASHTO standard specifications for highway bridges, Division II, section 18.7.2.6) is not required.

The steel load plate shall be ASTM A709 grade 50 steel and shall be coated in accordance with items 513 and 514. (Dimecote 9 liquid and Dimecote 9 Series Powder)

The steel load plate shall be bonded by vulcanization to the elastomer during the molding process.

Each bearing assembly shall be shop marked with the following information: top, forward station direction, location (rear abutments, Pier 1, Pier 2, or forward Abutments) and beam number. All bearings shall be marked prior to shipping. the marks shall include the bearing location on the bridge, and a direction arrow that points up-station. all marks shall be permanent and be visible after the bearing is installed.

Anchor rods shall be ASTM F1554, Grade 105. Nuts shall conform to ASTM A563 for appropriate grade and size of anchor bolt. Washers shall confom to ASTM F436.

P =Number of Steel Laminates per Bearing
t= steel laminate thickness = .0747"
te = external elastomer layer thickness (1 ea.)
ti = internal elastomer layer thickness (10 ea.)

BEARING LOCATION	NO. REQ'D	Le	We	He	te	ti	P	Lpl	Wpl	TCB					
Rear AB	4	18"	18"	5.99"	1/4"	1/2"	10	19"	24"	1-1/2"					

BRIDGE COMPONENTS INDUSTRIES, LLC

CONTRACTOR:	Kokosing
COUNTY:	Cuyahoga
Bridge #:	CUY-010-1976L
PROJECT:	ODOT 3000-17
Date:	2/19/2020
Drawing Number	Brodot 3000-17
Page	2 of 4

Bevel Table	
A	C
1-7/32"	1-25/32"

Checked By	Neil Spears
Drawn By	Brodie Spears

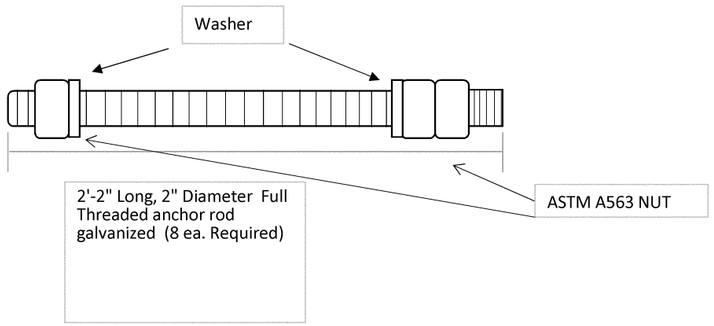

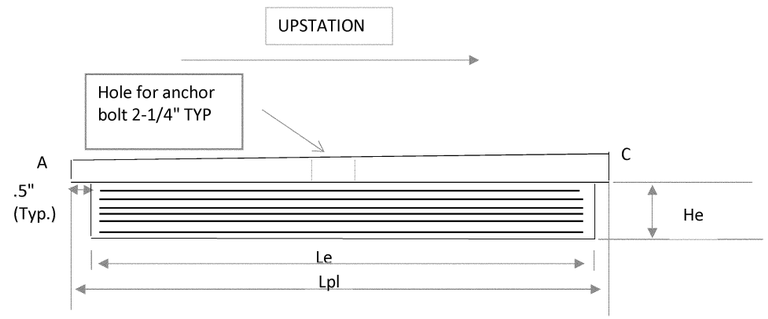

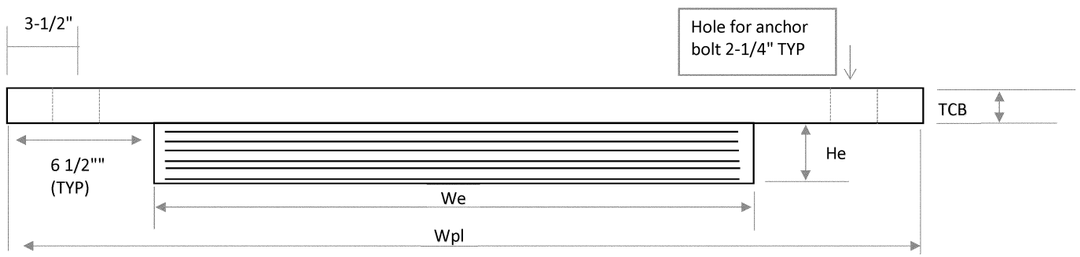

The elastomer shall have a hardness of 50 Durometer. The bearings were designed in accordance with section 14.7.6 (method A) of the AASHTO LRFD bridge design specifications. The long-term compression proof load test (AASHTO standard specifications for highway bridges, Division II, section 18.7.2.6) is not required.

The steel load plate shall be ASTM A709 grade 50 steel and shall be coated in accordance with items 513 and 514. (Dimecote 9 liquid and Dimecote 9 Series Powder)

The steel load plate shall be bonded by vulcanization to the elastomer during the molding process.

Each bearing assembly shall be shop marked with the following information: top, forward station direction, location (rear abutments, Pier 1, Pier 2, or forward Abutments) and beam number. All bearings shall be marked prior to shipping. the marks shall include the bearing location on the bridge, and a direction arrow that points up-station. all marks shall be permanent and be visible after the bearing is installed.

Anchor rods shall be ASTM F1554, Grade 105. Nuts shall conform to ASTM A563 for appropriate grade and size of anchor bolt. Washers shall confom to ASTM F436.

P =Number of Steel Laminates per Bearing
t= steel laminate thickness = .0747"
te = external elastomer layer thickness (1 ea.)
ti = internal elastomer layer thickness (6 ea.)

BEARING LOCATION	NO. REQ'D	Le	We	He	te	ti	P	Lpl	Wpl	TCB	BOLTS				
Pier 1	4	23"	28"	4.44"	1/4"	5/8"	6	24"	41"	1-1/2"	8				

BRIDGE COMPONENTS INDUSTRIES, LLC

CONTRACTOR:	Kokosing
COUNTY:	Cuyahoga
Bridge #:	CUY-010-1976L
PROJECT:	ODOT 3000-17
Date:	2/19/2020
Drawing Number	Brodot 3000-17
Page	3 of 4

Checked By	Neil Spears
Drawn By	Brodie Spears

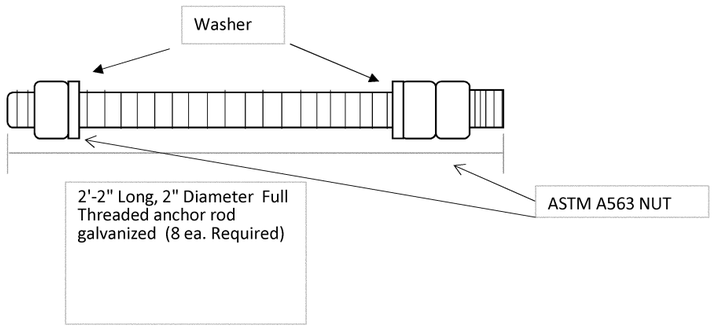

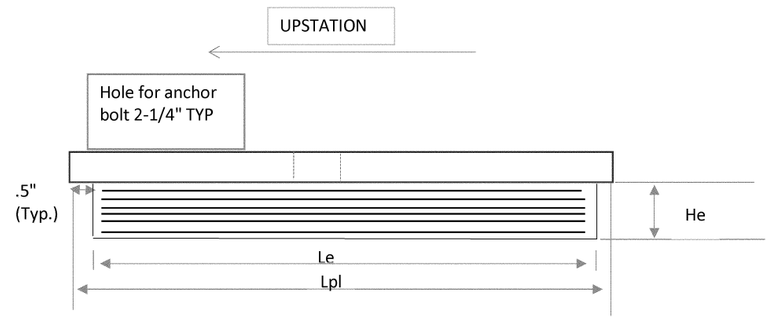

The elastomer shall have a hardness of 50 Durometer. The bearings were designed in accordance with section 14.7.6 (method A) of the AASHTO LRFD bridge design specifications. The long-term compression proof load test (AASHTO standard specifications for highway bridges, Division II, section 18.7.2.6) is not required.

The steel load plate shall be ASTM A709 grade 50 steel and shall be coated in accordance with items 513 and 514. (Dimecote 9 liquid and Dimecote 9 Series Powder)

The steel load plate shall be bonded by vulcanization to the elastomer during the molding process.

Each bearing assembly shall be shop marked with the following information: top, forward station direction, location (rear abutments, Pier 1, Pier 2, or forward Abutments) and beam number. All bearings shall be marked prior to shipping, the marks shall include the bearing location on the bridge, and a direction arrow that points up-station. all marks shall be permanent and be visible after the bearing is installed.

Anchor rods shall be ASTM F1554, Grade 105. Nuts shall conform to ASTM A563 for appropriate grade and size of anchor bolt. Washers shall confom to ASTM F436.

P =Number of Steel Laminates per Bearing
t= steel laminate thickness = .0747"
te = external elastomer layer thickness (1 ea.)
ti = internal elastomer layer thickness (6 ea.)

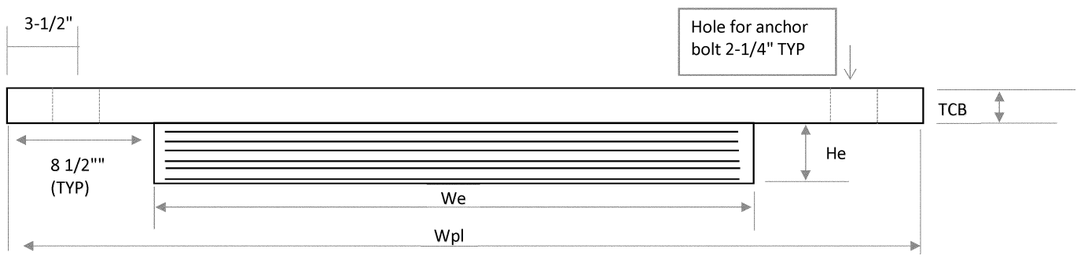

BEARING LOCATION	NO. REQ'D	Le	We	He	te	ti	P	Lpl	Wpl	TCB	BOLTS				
Pier 2	4	24"	24"	4.44"	1/4"	5/8"	6	25"	41"	1-1/2"	8				

BRIDGE COMPONENTS INDUSTRIES, LLC

CONTRACTOR:	Kokosing
COUNTY:	Cuyahoga
Bridge #:	CUY-010-1976L
PROJECT:	ODOT 3000-17
Date:	2/19/2020
Drawing Number	Brodot 3000-17
Page	4 of 4

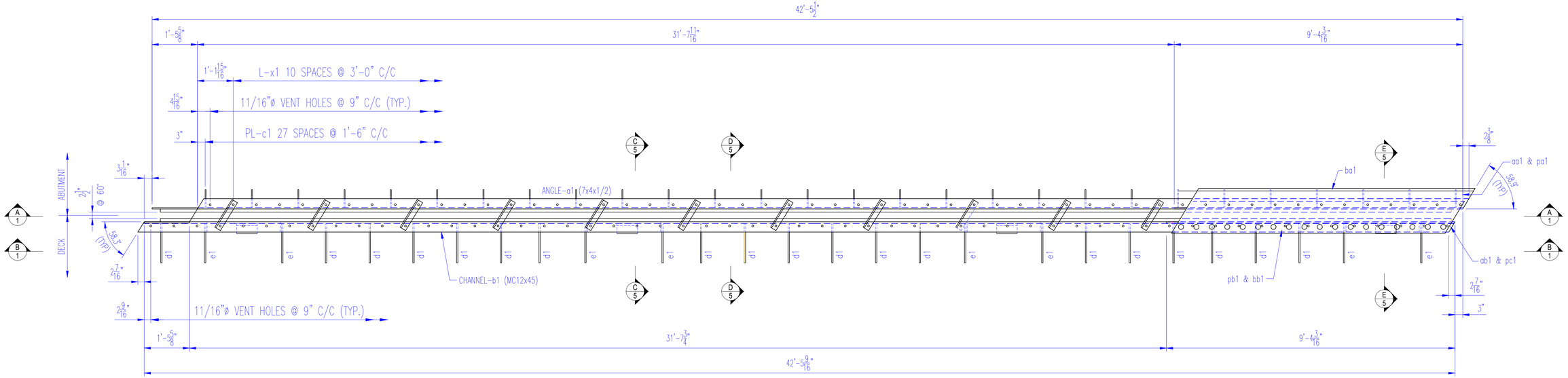

1 - EXPANSION JOINT EJ22F

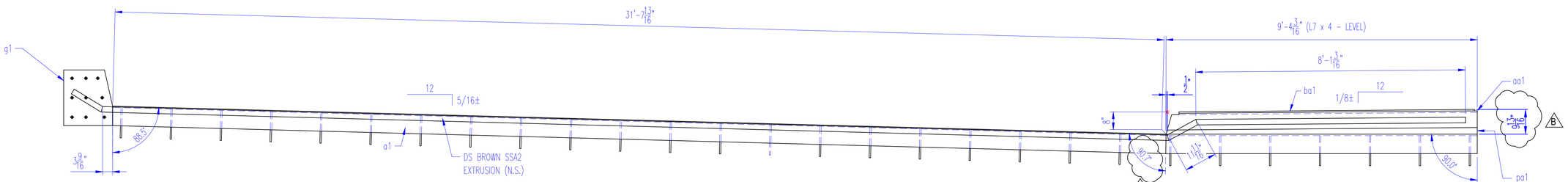

SECTION A/1

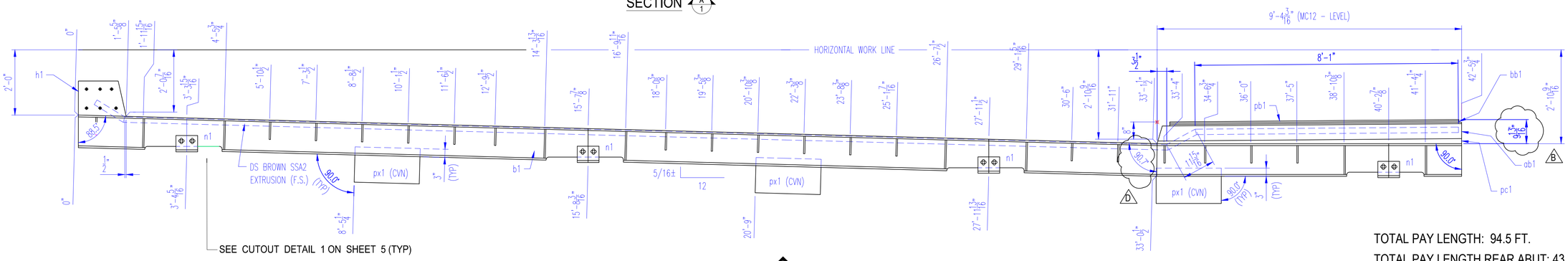

SECTION B/1

TOTAL PAY LENGTH: 94.5 FT.

TOTAL PAY LENGTH REAR ABUT: 43.5 FT.

NOTE:
PLATE px1 TO BE CVN

NOTES:
SEE SHEET 3 FOR SIDEWALK AND GUSSET PLATE DETAILS
SEE SHEETS 5 FOR EXPANSION JOINT DETAILS
SEE SHEET 6 FOR EXPANSION JOINT DETAILS, GENERAL NOTES & BILL OF MATERIAL
SEE SHEET 7 FOR EXPANSION JOINT LOCATION PLAN

AISC CERTIFIED FABRICATOR

BRIDGE - INTERMEDIATE (MAJOR)
FRACTURE CRITICAL ENDORSEMENT
SOPHISTICATED PAINT ENDORSEMENT

REV. No.	REVISION
B	Adjust elevation Per Contractor 1/23/20
D	Adjust skew angle Per Contractor 2/5/20

SHOP INSPECTED BY:

KOKOSING CONSTRUCTION
- [x] NO EXCEPTIONS TAKEN
- [ ] MAKE CORRECTIONS AS NOTED
- [ ] REVISE AND RESUBMIT
- [ ] REJECTED
- [ ] FOR INFORMATION ONLY

REVIEW IS FOR GENERAL COMPLIANCE WITH CONTRACT DOCUMENTS
NO RESPONSIBILITY ASSUMED FOR CORRECTNESS OF DIMENSIONS OR DETAILS

BY mwf DATE 2/10/2020

OHIO STRUCTURES INC.
4030 Boardman Canfield Road, Ste. 200 D
Canfield, Ohio 44406
(330) 533-0084 FAX: (330) 533-0191

OHIO DEPARTMENT OF TRANSPORTATION
BRIDGE NO.: CUY - 010 - 1976L
OH-10 WESTBOUND OVER GCTRA BLUE AND GREEN LINES

SCALE: N.T.S.	KOKOSING CONST. CO. INC.	DRAWN: TJK
DATE: 10/19		CHECK: LF
REAR ABUTMENT EXPANSION JOINT - EJ22F - WESTBOUND		
REF NO.: BU19b		ITEM NO.: 516
ODOT PROJ. NO.: 173000	CUYAHOGA COUNTY	DWG. NO.: D1
OSI PROJ. NO.: 19-22	PID NO.: 96833 SFN: 1801517	1 OF 7

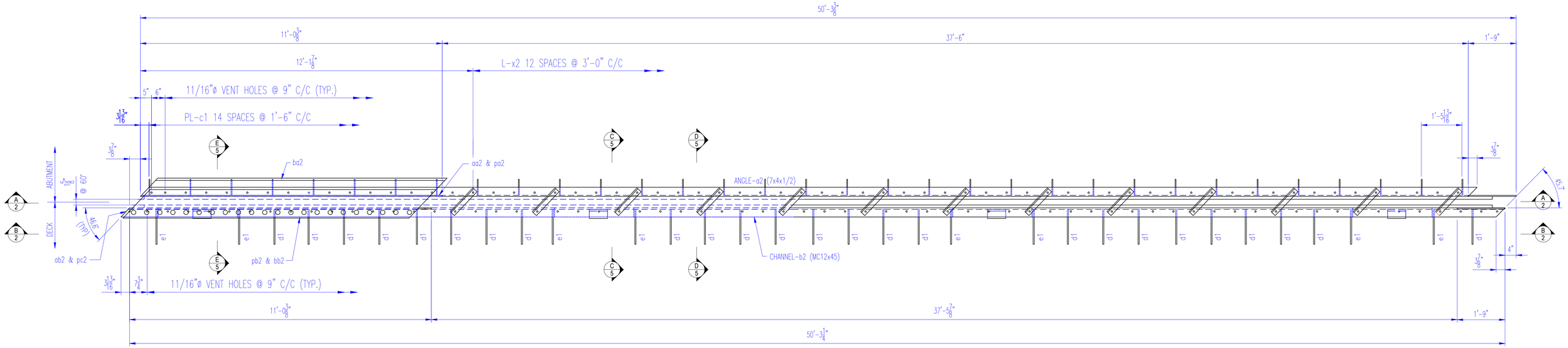

1 - EXPANSION JOINT EJ22H

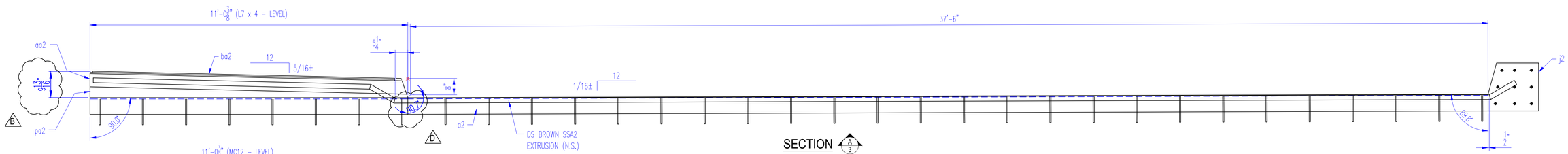

SECTION A/3

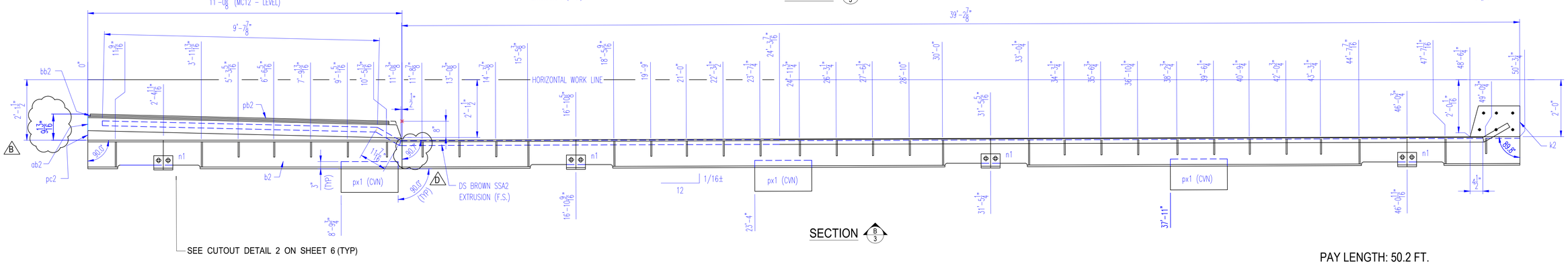

SECTION B/3

PAY LENGTH: 50.2 FT.

NOTE:
PLATE px1 TO BE CVN

NOTES:
SEE SHEET 4 FOR SIDEWALK AND GUSSET PLATE DETAILS
SEE SHEET 5 FOR EXPANSION JOINT DETAILS
SEE SHEET 6 FOR EXPANSION JOINT DETAILS, GENERAL NOTES & BILL OF MATERIAL
SEE SHEET 7 FOR EXPANSION JOINT LOCATION PLAN

AISC CERTIFIED FABRICATOR
BRIDGE - INTERMEDIATE (MAJOR)
FRACTURE CRITICAL ENDORSEMENT
SOPHISTICATED PAINT ENDORSEMENT

REV. No.	REVISION
B	Adjust elevation Per Contractor 1/23/20
D	Adjust skew angle Per Contractor 2/5/20

SHOP INSPECTED BY:

APPROVAL
KOKOSING CONSTRUCTION
- [x] NO EXCEPTIONS TAKEN
- [ ] MAKE CORRECTIONS AS NOTED
- [ ] REVISE AND RESUBMIT
- [ ] REJECTED
- [ ] FOR INFORMATION ONLY

REVIEW IS FOR GENERAL COMPLIANCE WITH CONTRACT DOCUMENTS
NO RESPONSIBILITY ASSUMED FOR CORRECTNESS OF DIMENSIONS OR DETAILS

BY mwf DATE 2/10/2020

OHIO STRUCTURES INC.
4030 Boardman Canfield Road, Ste. 200 D
Canfield, Ohio 44406
(330) 533-0084 FAX: (330) 533-0191

OHIO DEPARTMENT OF TRANSPORTATION
BRIDGE NO.: CUY - 010 - 1976L
OH-10 WESTBOUND OVER GCTRA BLUE AND GREEN LINES

SCALE: N.T.S.	KOKOSING CONST. CO. INC.	DRAWN: TJK
DATE: 10/19		CHECK: LF

FORWARD ABUTMENT EXPANSION JOINT - EJ22H - WESTBOUND

REF NO.: BU19b			ITEM NO.: 516
ODOT PROJ. NO.: 173000	CUYAHOGA COUNTY		DWG. NO.: D2
OSI PROJ. NO.: 19-22	PID NO.: 96833	SFN: 1801517	2 OF 7

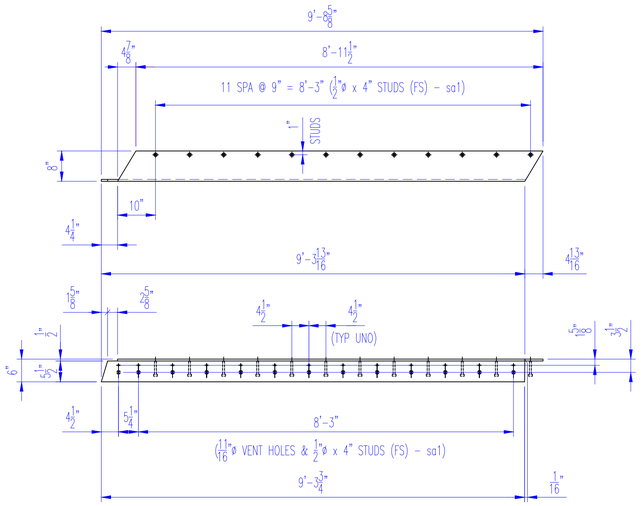

ANGLE - aa1

MATERIAL: L 8 x 6 x 1/2"

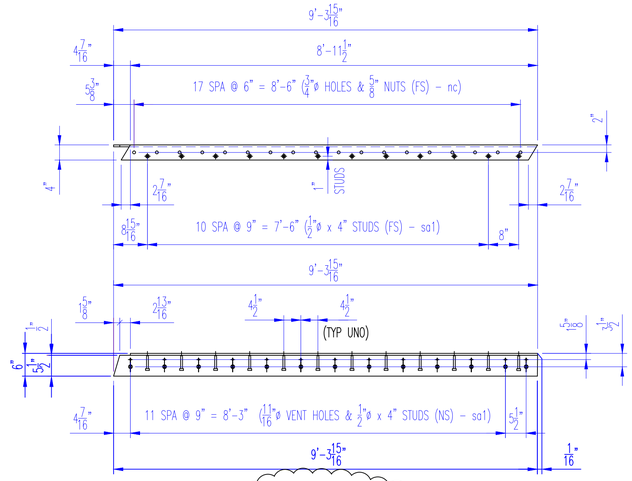

ANGLE - ab1

MATERIAL: L 6 x 4 x 1/2"

E

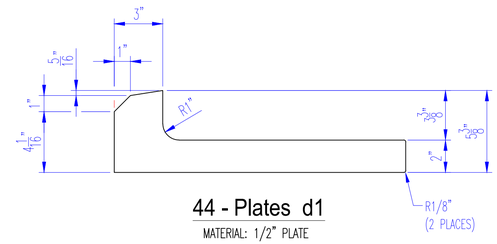

44 - Plates d1

MATERIAL: 1/2" PLATE

ADJUST SIZE TO FIT INSIDE THE MC12x45 CHANNEL

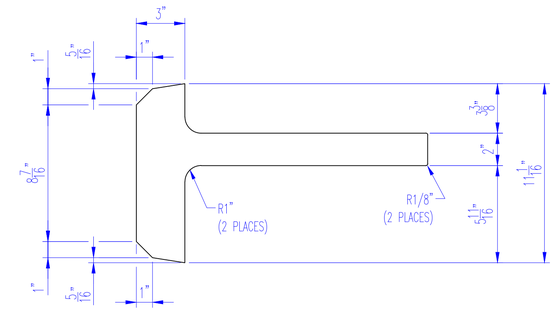

16 - Plates e1

MATERIAL: 1/2" PLATE

ADJUST SIZE TO FIT INSIDE THE MC12x45 CHANNEL

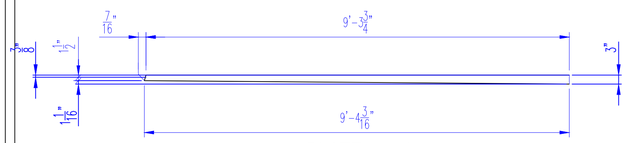

PLATE - pa1

MATERIAL: PL 1/2" x 3"

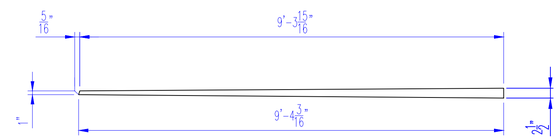

PLATE - pc1

MATERIAL: PL 1/2" x 1 7/8"

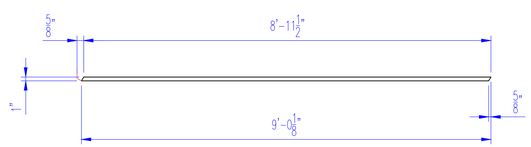

BAR - ba1

MATERIAL: BAR 1" x 1/2"

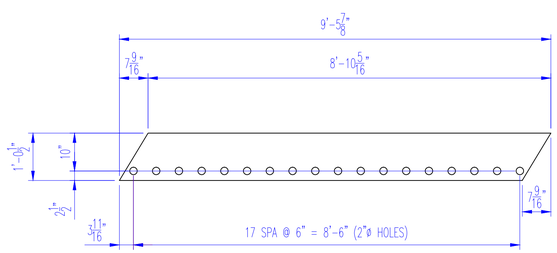

PLATE - pb1

MATERIAL: PL 1/2" x 12 1/2"

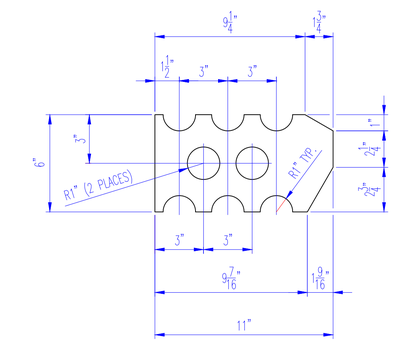

61 - Plates c1

MATERIAL: 3/8" PLATE

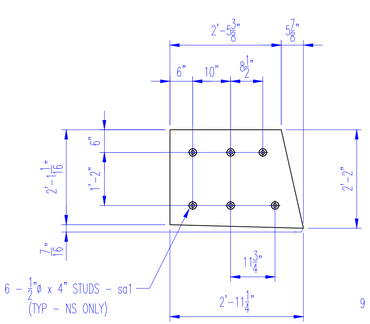

Detail-h1

MATERIAL: 1/2" PL

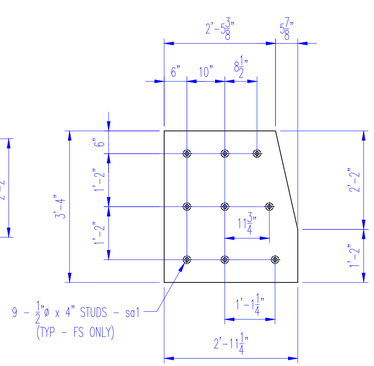

Detail-g1

MATERIAL: 1/2" PL

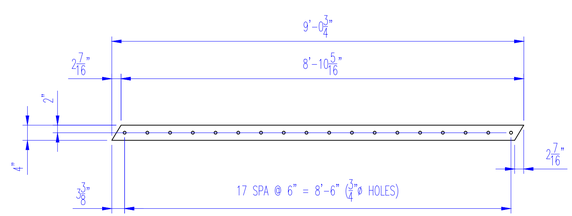

BAR - bb1

MATERIAL: BAR 4" x 1/2"

AISC CERTIFIED FABRICATOR

BRIDGE - INTERMEDIATE (MAJOR)
FRACTURE CRITICAL ENDORSEMENT
SOPHISTICATED PAINT ENDORSEMENT

NOTE:

SEE SHEETS 1 & 2 FOR EXPANSION JOINT DETAILS

REV. No.	REVISION
E	REVISE ANGLE SIZE 2/12/20

SHOP INSPECTED BY:

APPROVAL

KOKOSING CONSTRUCTION

- ☑ NO EXCEPTIONS TAKEN
- ☐ MAKE CORRECTIONS AS NOTED
- ☐ REVISE AND RESUBMIT
- ☐ REJECTED
- ☐ FOR INFORMATION ONLY

REVIEW IS FOR GENERAL COMPLIANCE WITH CONTRACT DOCUMENTS
NO RESPONSIBILITY ASSUMED FOR CORRECTNESS OF DIMENSIONS OR DETAILS

BY mwf DATE 2/14/2020

OHIO STRUCTURES INC.
4030 Boardman Canfield Road, Ste. 200 D
Canfield, Ohio 44406
(330) 533-0084 FAX: (330) 533-0191

OHIO DEPARTMENT OF TRANSPORTATION
BRIDGE NO.: CUY - 010 - 1976L
OH-10 WESTBOUND OVER GCTRA BLUE AND GREEN LINES

SCALE: N.T.S.	KOKOSING CONST. CO. INC.	DRAWN: TJK
DATE: 10/19		CHECK: LF
EXPANSION JOINT		
REF NO.: BU19b		ITEM NO.: 516
ODOT PROJ. NO.: 173000	CUYAHOGA COUNTY	DWG. NO.: D3
OSI PROJ. NO.: 19-22	PID NO.: 96833 SFN: 1801517	3 OF 7

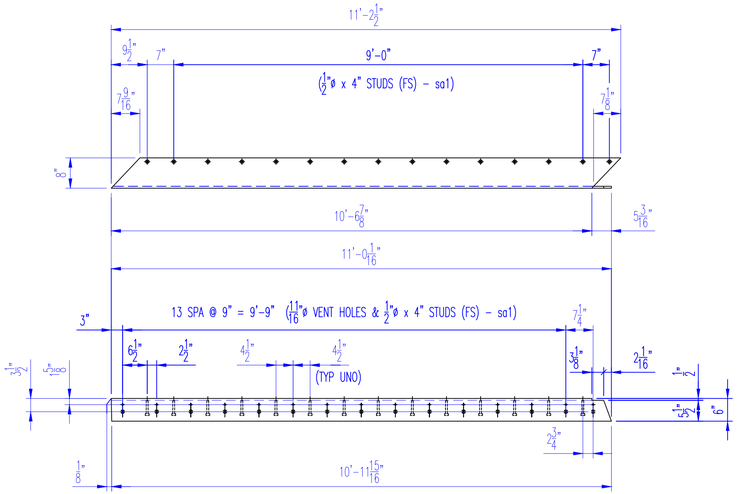

ANGLE - aa2

MATERIAL: L 8 x 6 x 1/2"

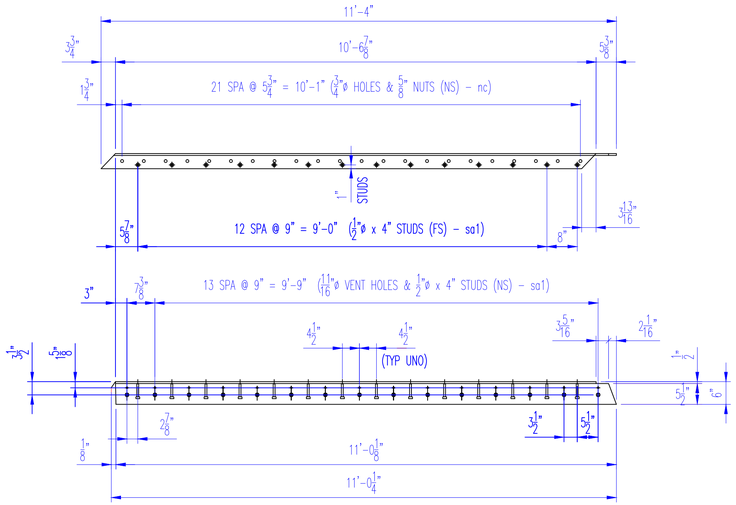

ANGLE - ab2

MATERIAL: L 6 x 4 x 1/2"

E

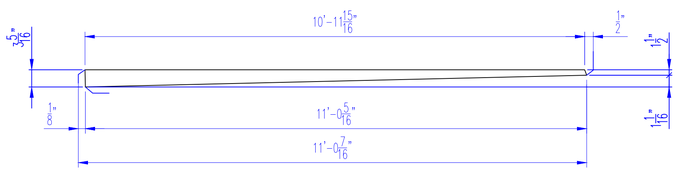

PLATE - pa2

MATERIAL: PL 1/2" x 4 9/16"

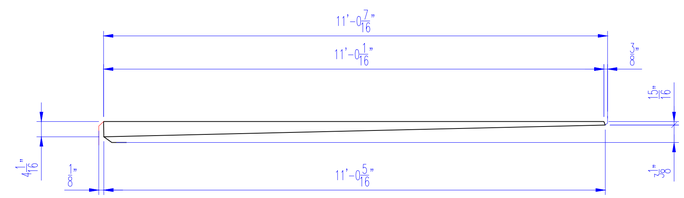

PLATE - pc2

MATERIAL: PL 1/2" x 4 1/16"

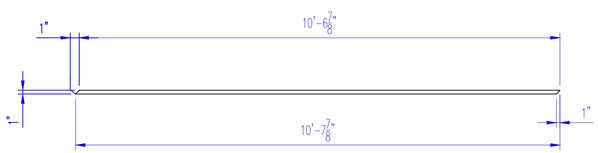

BAR - ba2

MATERIAL: BAR 1" x 1/2"

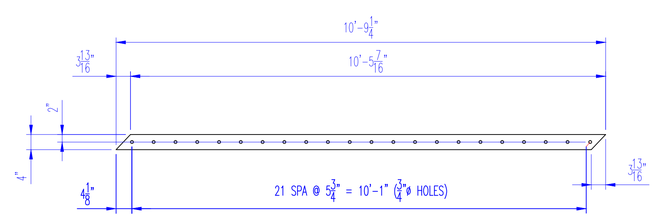

BAR - bb2

MATERIAL: BAR 4" x 1/2"

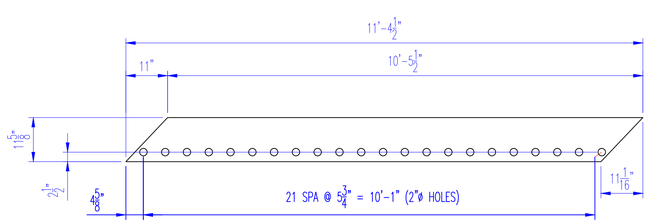

PLATE - pb2

MATERIAL: PL 1/2" x 12 1/2"

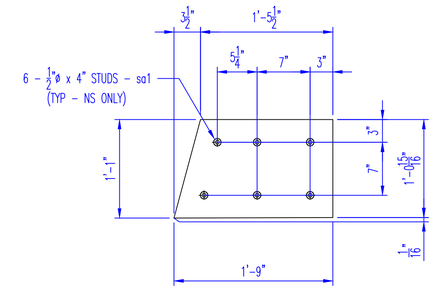

Detail-k2

MATERIAL: 1/2" PL

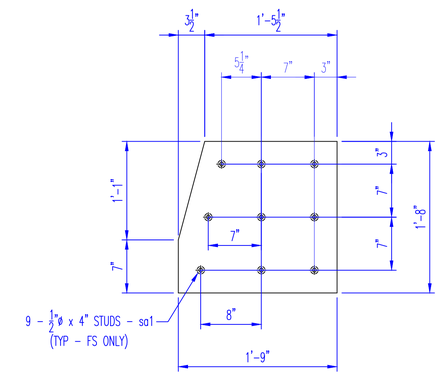

Detail-j2

MATERIAL: 1/2" PL

AISC CERTIFIED FABRICATOR

BRIDGE - INTERMEDIATE (MAJOR)
FRACTURE CRITICAL ENDORSEMENT
SOPHISTICATED PAINT ENDORSEMENT

NOTE:

SEE SHEETS 1 & 2 FOR EXPANSION JOINT DETAILS

REV. No.	REVISION
E	REVISE ANGLE SIZE 2/12/20
SHOP INSPECTED BY:	

APPROVAL

KOKOSING CONSTRUCTION

- [x] NO EXCEPTIONS TAKEN
- [ ] MAKE CORRECTIONS AS NOTED
- [ ] REVISE AND RESUBMIT
- [ ] REJECTED
- [ ] FOR INFORMATION ONLY

REVIEW IS FOR GENERAL COMPLIANCE WITH CONTRACT DOCUMENTS
NO RESPONSIBILITY ASSUMED FOR CORRECTNESS OF DIMENSIONS OR DETAILS

BY mwf DATE 2/14/2020

OHIO STRUCTURES INC.
4030 Boardman Canfield Road, Ste. 200 D
Canfield, Ohio 44406
(330) 533-0084 FAX: (330) 533-0191

OHIO DEPARTMENT OF TRANSPORTATION
BRIDGE NO.: CUY - 010 - 1976L
OH-10 WESTBOUND OVER GCTRA BLUE AND GREEN LINES

SCALE: N.T.S.	KOKOSING CONST. CO. INC.	DRAWN: TJK
DATE: 10/19		CHECK: LF
EXPANSION JOINT		
REF NO.: BU19b		ITEM NO.: 516
ODOT PROJ. NO.: 173000	CUYAHOGA COUNTY	DWG. NO.: D4
OSI PROJ. NO.: 19-22	PID NO.: 96833 SFN: 1801517	4 OF 7

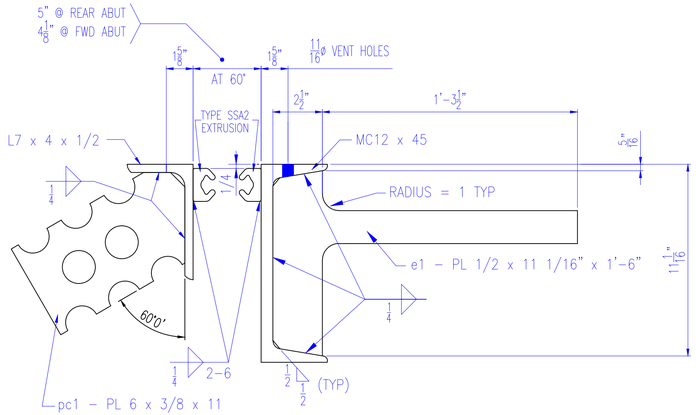

SECTION C 1 & 2

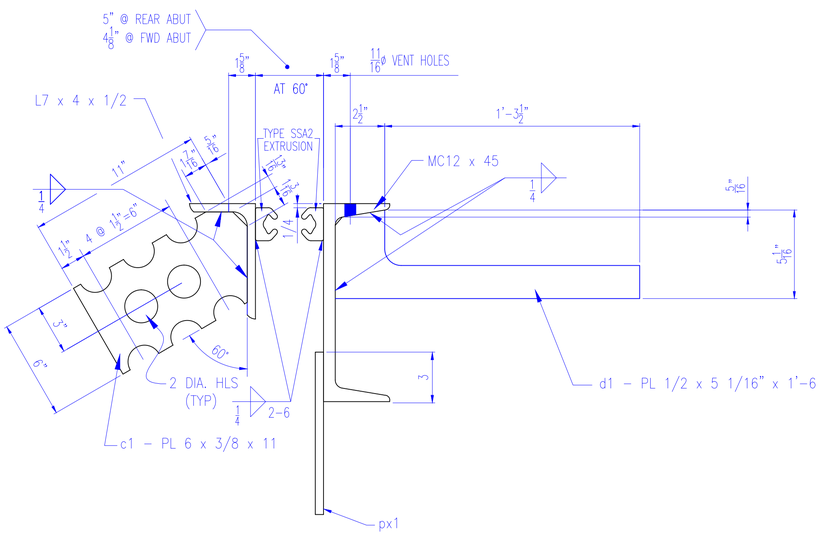

SECTION D 1 & 2

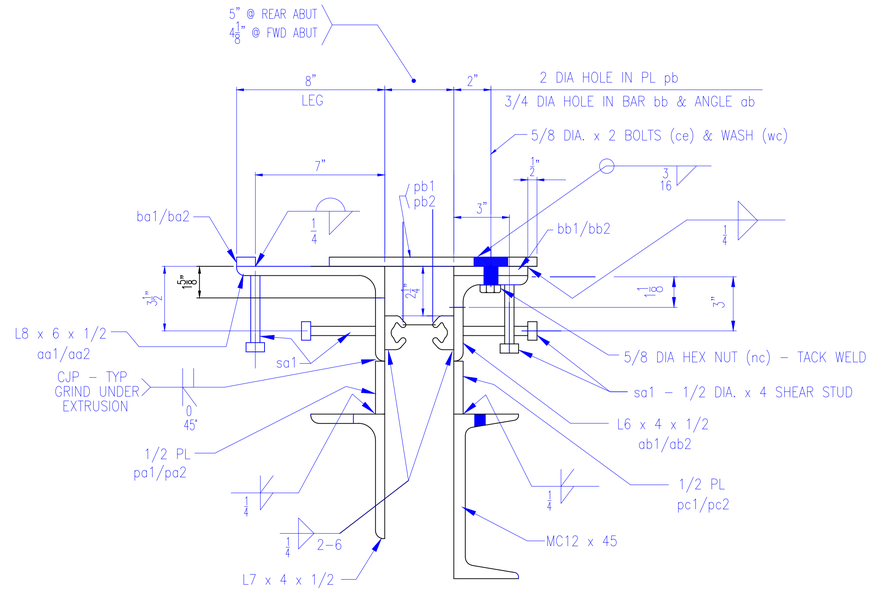

SECTION E 1

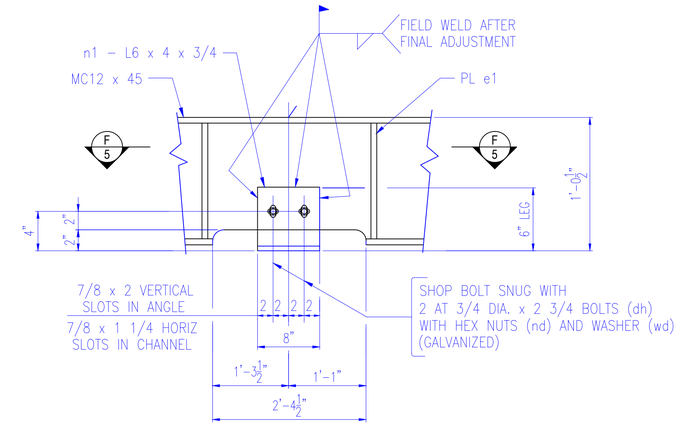

DETAIL '1'

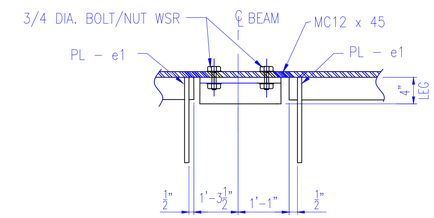

SECTION F 5

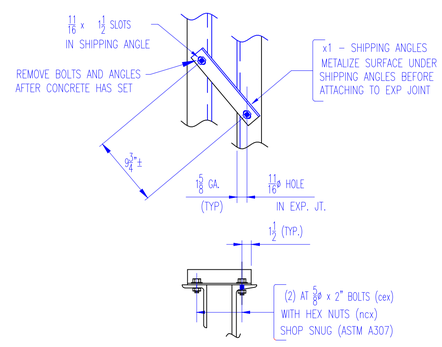

SHIPPING ANGLE DETAIL
FOR REAR ABUTMENT ONLY

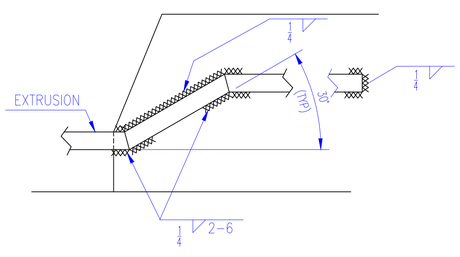

TYPICAL SIDEWALK/EXTRUSION WELD

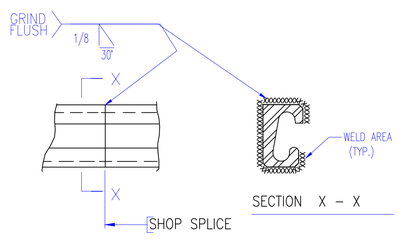

TYPICAL EXTRUSION
SHOP WELD SPLICE

NOTE:
SEE SHEETS 1 & 2 FOR EXPANSION JOINT DETAILS

AISC CERTIFIED FABRICATOR
BRIDGE - INTERMEDIATE (MAJOR)
FRACTURE CRITICAL ENDORSEMENT
SOPHISTICATED PAINT ENDORSEMENT

REV. No.	REVISION
SHOP INSPECTED BY:	

APPROVAL
KOKOSING CONSTRUCTION
- [x] NO EXCEPTIONS TAKEN
- [ ] MAKE CORRECTIONS AS NOTED
- [ ] REVISE AND RESUBMIT
- [ ] REJECTED
- [ ] FOR INFORMATION ONLY

REVIEW IS FOR GENERAL COMPLIANCE WITH CONTRACT DOCUMENTS
NO RESPONSIBILITY ASSUMED FOR CORRECTNESS OF DIMENSIONS OR DETAILS

BY mwf DATE 2/10/2020

OHIO STRUCTURES INC.
4030 Boardman Canfield Road, Ste. 200 D
Canfield, Ohio 44406
(330) 533-0084 FAX: (330) 533-0191

OHIO DEPARTMENT OF TRANSPORTATION
BRIDGE NO.: CUY - 010 - 1976L
OH-10 WESTBOUND OVER GCTRA BLUE AND GREEN LINES

SCALE: N.T.S.	KOKOSING CONST. CO. INC.	DRAWN: TJK
DATE: 10/19		CHECK: LF
EXPANSION JOINT SECTIONS AND DETAILS		
REF NO.: BU19b		ITEM NO.: 516
ODOT PROJ. NO.: 173000	CUYAHOGA COUNTY	DWG. NO.: D5
OSI PROJ. NO.: 19-22	PID NO.: 96833 / SFN: 1801517	5 OF 7

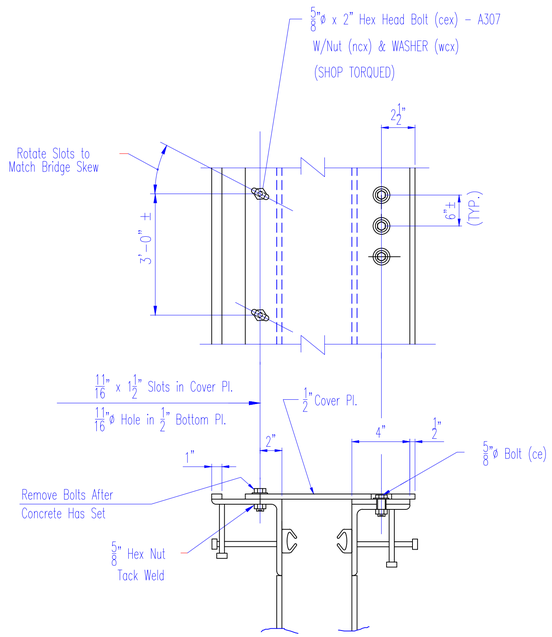

TYPICAL SIDEWALK SHIPPING CONNECTION DETAIL

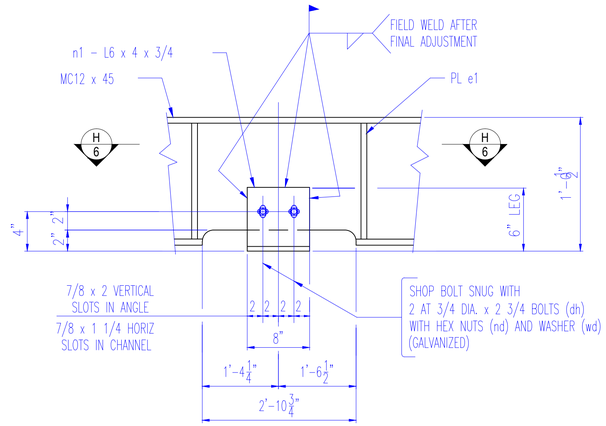

DETAIL '2'

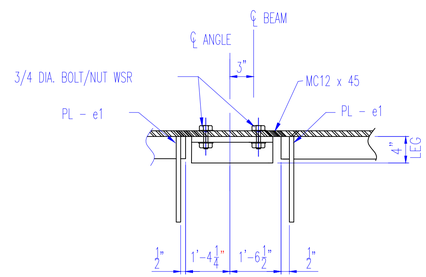

SECTION H 6

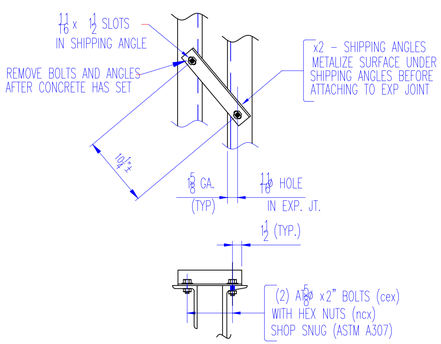

SHIPPING ANGLE DETAIL
FOR FORWARD ABUTMENT ONLY

ODOT PROJ NO. 173000 | PID NO.: 96833 | OSI PROJ #: 19-22 | REF #: BU19b | ITEM#: 516

* * * EXPANSION JOINTS - EJ22F & EJ22H * * *

MATERIALS ONLY:

	LINE	PO#	QTY	MARK	SECTION	LENGTH (FEET)	LENGTH (INCHES)	STL SPEC	PC WT (IN LBS)	NET WT (IN LBS)	HEAT #	REMARK
	1		1	a1	ANGLE 7x4x1/2	41	1/4	A709-50	734.27	734.27		
	2		1	a2	ANGLE 7x4x1/2	48	6 1/2	A709-50	868.90	868.90		
	5		1	b1	MC12x45.0	42	6	A709-50	1,912.50	1,912.50		
	6		1	b2	MC12x45.0	50	3 1/2	A709-50	2,263.13	2,263.13		
	9											
	10		16	e1	PLATE 1/2 x 14 3/16	1	6	A709-36	10.03	160.48		
	11		44	d1	PLATE 1/2 x 5 3/8	1	6	A709-36	6.41	282.04		
	12		61	c1	PLATE 3/8 x 6	0	11	A709-36	5.03	306.83		
	13											
	14		1	g1	PLATE 1/2 x 17 5/8	1	8	A709-36	49.98	49.98		
	15		1	h1	PLATE 1/2 x 13	1	5 5/8	A709-36	32.49	32.49		
	16		1	j2	PLATE 1/2 x 20	1	9	A709-36	59.55	59.55		
	17		1	k2	PLATE 1/2 x 13	1	9	A709-36	38.71	38.71		
	18											
	19		1	aa1	ANGLE 8x6x1/2	9	8 5/8	A709-36	223.53	223.53		
	20		1	pa1	PLATE 1/2 x 3 5/16	9	4 3/16	A709-36	39.52	39.52		
	21		1	ba1	BAR 1 x 1/2	9	1/8	A709-36	11.50	11.50		
	22		1	pb1	PLATE 1/2 x 12 1/2	9	5 7/8	A709-36	201.82	201.82		
	23		1	bb1	BAR 4 x 1/2	9	3/4	A709-36	61.68	61.68		
E	24		1	ab1	ANGLE 6x4x1/2	9	3 15/16	A709-36	151.12	151.12		
	25		1	pc1	PLATE 1/2 x 2 13/16	9	3 7/8	A709-36	33.46	33.46		
	26											
	27		1	aa2	ANGLE 8x8x1/2	28	7 3/4	A709-36	756.25	756.25		
	28		1	pa2	PLATE 1/2 x 3 5/16	10	11 15/16	A709-36	46.47	46.47		
	29		1	ba2	BAR 1 x 1/2	10	7 7/8	A709-36	13.60	13.60		
	30		1	pb2	PLATE 1/2 x 11 5/8	11	4 1/2	A709-36	224.98	224.98		
	31		1	bb2	BAR 4 x 1/2	10	9 1/4	A709-36	73.30	73.30		
E	32		1	ab2	ANGLE6x4x1/2	11	4	A709-36	0.00	0.00		
	33		1	pc2	PLATE 1/2 x 2 13/16	11	9 7/16	A709-36	42.30	42.30		
	34											
A	35		6	px1	PLATE 1/2 x 12	2	4	A709-50-CVN	47.64	285.83		
	36											
	37		11	x1	ANGLE 2-1/2x2-1/2x1/4	1	3/4	A709-36	4.36	47.92		SHIPPING
	38		13	x2	ANGLE 2-1/2x2-1/2x1/4	1	1 1/4	A709-36	4.53	58.85		SHIPPING
	39											
	40		8	n1	ANGLE 6x4x3/4	0	8	A709-50	15.73	125.87		
	41											
	42		* 1		A2R-XTRA STRIP SEAL	44	0					R ABUT - DS BROWN
	43		* 1		A2R-400	52	0					F ABUT - DS BROWN
	44		* 8.4		SSA2 EXTRUSION	23	0	A709-36	122.23	1,026.73		DS BROWN
	45		* 2.00		GAL OF GLUE							DS BROWN
	46											
									SUB TOTAL	**10,133.59**		

HARDWARE ONLY:

LINE		QTY	MARK	DESCRIPTION		STL SPEC	WT PER (IN LBS)	NET WT (IN LBS)	HEAT #	REMARKS
47		56	cex	5/8x2 HEX HEAD BOLT		A307	0.26	14.34		SHIPPING
48		40	ce	5/8x2 HEX HEAD BOLT	A325	F3125 Galv	0.26	10.24		
49		40	wc	5/8 FLAT WASHER		F436 Galv	0.03	1.32		
50		8	wcx	5/8 FLAT WASHER		F436	0.03	0.26		SHIPPING
51		40	nc	5/8 HEAVY HEX NUT		A563 Galv	0.12	4.80		
52		56	ncx	5/8 HEAVY HEX NUT		A563	0.12	6.72		SHIPPING
53										
54		16	ba	3/4x2-3/4 HEX HEAD BOLT	A325	F3125 Galv	0.48	7.70		
55		16	wa	3/4 FLAT WASHER		F436 Galv	0.04	0.66		
56		16	na	3/4 HEAVY HEX NUT		A563 Galv	0.20	3.20		
57										
58		138	sa1	1/2x4-1/8 CONCRETE ANCHOR		A108	0.28	38.92		
							SUB TOTAL	**88.15**		

*** INDICATES AN ITEM THAT WILL BE SHIPPED LOOSE**

TOTAL WT 10,221.73

GENERAL NOTES:

* MATERIAL AND WORKMANSHIP SHALL BE IN ACCORDANCE WITH ODOT-CMS-2016.
* WELDING SHALL BE IN ACCORDANCE WITH AWS/AASHTO D1.5-15 AND ODOT 1011.
* ALL MATERIAL TO BE METALIZED IN CONFORMANCE WITH O.D.O.T. STANDARD DRAWING EXJ-4-87 DATED 7/19/02.
* ALL INFORMATION & DIMENSIONS ARE TO BE APPROVED BY THE CONTRACTOR PRIOR TO COMMENCING FABRICATION.

NOTE:

SEE SHEETS 1 & 2 FOR EXPANSION JOINT DETAILS

AISC CERTIFIED FABRICATOR

BRIDGE - INTERMEDIATE (MAJOR)
FRACTURE CRITICAL ENDORSEMENT
SOPHISTICATED PAINT ENDORSEMENT

REV. No.	REVISION
A	REVISED LENGTH
E	REVISE ANGLE SIZE 2/12/20

SHOP INSPECTED BY:

KOKOSING CONSTRUCTION

- [x] NO EXCEPTIONS TAKEN
- [ ] MAKE CORRECTIONS AS NOTED
- [ ] REVISE AND RESUBMIT
- [ ] REJECTED
- [ ] FOR INFORMATION ONLY

REVIEW IS FOR GENERAL COMPLIANCE WITH CONTRACT DOCUMENTS
NO RESPONSIBILITY ASSUMED FOR CORRECTNESS OF DIMENSIONS OR DETAILS

BY mwf DATE 2/14/2020

OHIO STRUCTURES INC.
4030 Boardman Canfield Road, Ste. 200 D
Canfield, Ohio 44406
(330) 533-0084 FAX: (330) 533-0191

OHIO DEPARTMENT OF TRANSPORTATION
BRIDGE NO.: CUY - 010 - 1976L
OH-10 WESTBOUND OVER GCTRA BLUE AND GREEN LINES

SCALE: N.T.S. | DRAWN: TJK
DATE: 10/19 | KOKOSING CONST. CO. INC. | CHECK: LF
EXPANSION JOINT SECTIONS, DETAILS & BOM
REF NO.: BU19b | ITEM NO.: 516
ODOT PROJ. NO.: 173000 | CUYAHOGA COUNTY | DWG. NO.: D6
OSI PROJ. NO.: 19-22 | PID NO.: 96833 | SFN: 1801517 | 6 OF 7

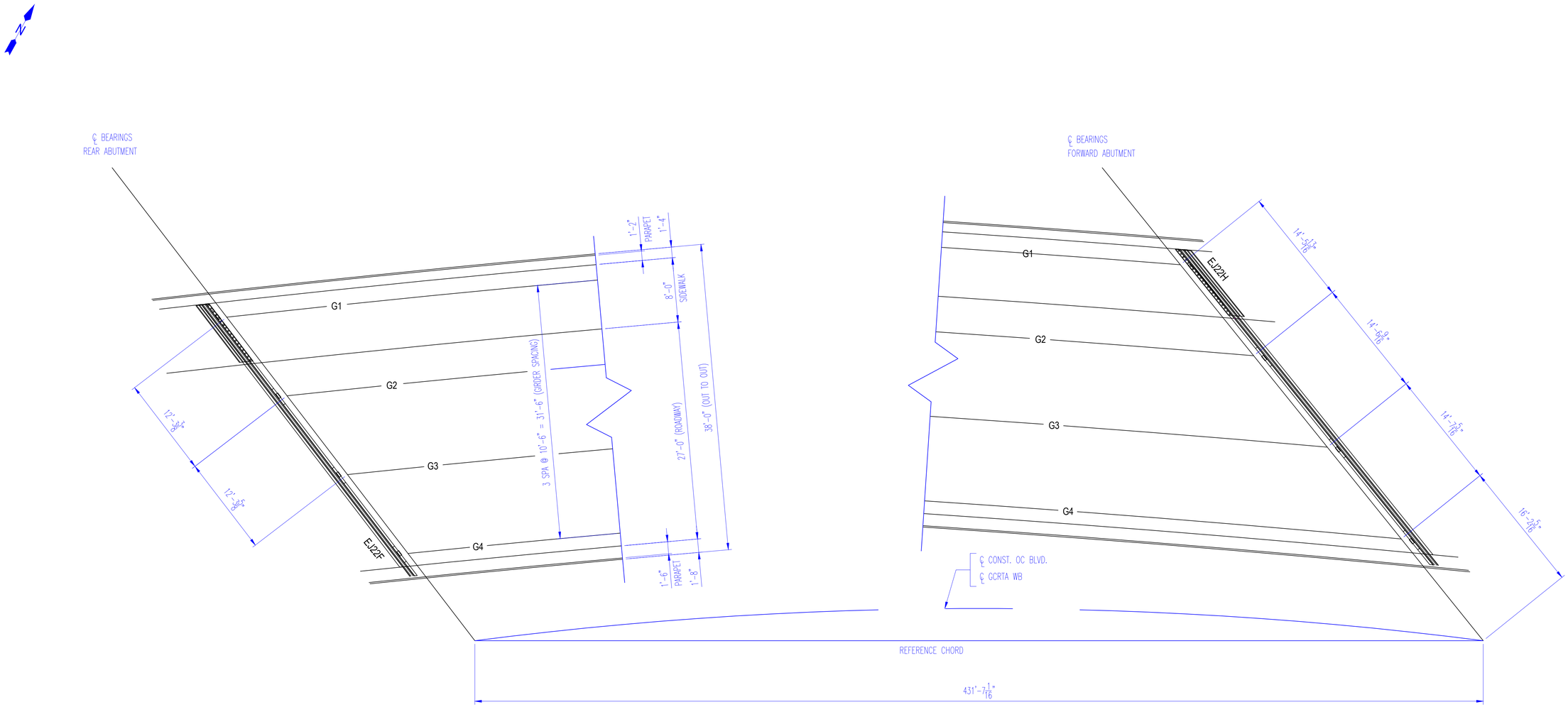

EXPANSION JOINT LOCATION PLAN

WESTBOUND

NOTES:

SEE SHEETS 1 & 2 FOR EXPANSION JOINT DETAILS

AISC CERTIFIED FABRICATOR

BRIDGE - INTERMEDIATE (MAJOR)
FRACTURE CRITICAL ENDORSEMENT
SOPHISTICATED PAINT ENDORSEMENT

REV. No.	REVISION
SHOP INSPECTED BY:	

APPROVAL

KOKOSING CONSTRUCTION

- [x] NO EXCEPTIONS TAKEN
- [ ] MAKE CORRECTIONS AS NOTED
- [ ] REVISE AND RESUBMIT
- [ ] REJECTED
- [ ] FOR INFORMATION ONLY

REVIEW IS FOR GENERAL COMPLIANCE WITH CONTRACT DOCUMENTS
NO RESPONSIBILITY ASSUMED FOR CORRECTNESS OF DIMENSIONS OR DETAILS

BY mwf DATE 2/10/2020

OHIO STRUCTURES INC.
4030 Boardman Canfield Road, Ste. 200D
Canfield, Ohio 44406
(330) 533-0084 FAX: (330) 533-0191

OHIO DEPARTMENT OF TRANSPORTATION
BRIDGE NO.: CUY - 010 - 1976L
OH-10 WESTBOUND OVER GCTRA BLUE AND GREEN LINES

SCALE: N.T.S.	KOKOSING CONST. CO. INC.	DRAWN: TJK
DATE: 10/19		CHECK: LF
EXPANSION JOINT LOCATION PLAN - WESTBOUND		
REF NO.: BU19b		ITEM NO.: 516
ODOT PROJ. NO.: 173000	CUYAHOGA COUNTY	DWG. NO.: E1
OSI PROJ. NO.: 19-22	PID NO.: 96833 SFN: 1801518	7 OF 7

WESTBOUND

DWG NO.	DESCRIPTION	Detailer initials	Detailer name	Checker inititials	Checker name	Revision
GN201	GENERAL NOTES	AM	Alexandru Marin	DP	David Pelchat	1
E201	ERECTION PLAN	AM	Alexandru Marin	DP	David Pelchat	1
E202	ERECTION PLAN	AM	Alexandru Marin	DP	David Pelchat	1
E203	ERECTION PLAN - SECTIONS	AM	Alexandru Marin	DP	David Pelchat	1
E204	ERECTION PLAN - SECTIONS	AM	Alexandru Marin	DP	David Pelchat	1
E205	ERECTION PLAN - FIELD SPLICES	AM	Alexandru Marin	DP	David Pelchat	1
BD201	BLOCKING DIAGRAM	AM	Alexandru Marin	DP	David Pelchat	
BD202	BLOCKING DIAGRAM	AM	Alexandru Marin	DP	David Pelchat	
FA201	FULL ASSEMBLY DIAGRAM	AM	Alexandru Marin	EG	Eric Gingras	
BG201AB	CAMBER & FLANGES DIAGRAM	AM	Alexandru Marin	SA	Sylvain Auclair	1
BG201B	FLANGE DIAGRAM	AM	Alexandru Marin	SA	Sylvain Auclair	
BG202AB	CAMBER & FLANGES DIAGRAM	AM	Alexandru Marin	SA	Sylvain Auclair	1
BG202B	FLANGE DIAGRAM	AM	Alexandru Marin	SA	Sylvain Auclair	
BG203AB	CAMBER & FLANGES DIAGRAM	AM	Alexandru Marin	SA	Sylvain Auclair	1
BG203B	FLANGE DIAGRAM	AM	Alexandru Marin	SA	Sylvain Auclair	
BG204AB	CAMBER & FLANGES DIAGRAM	AM	Alexandru Marin	SA	Sylvain Auclair	1
BG204B	FLANGE DIAGRAM	AM	Alexandru Marin	SA	Sylvain Auclair	
BG205AB	CAMBER & FLANGES DIAGRAM	AM	Alexandru Marin	SA	Sylvain Auclair	1
BG205B	FLANGE DIAGRAM	AM	Alexandru Marin	SA	Sylvain Auclair	
BG206AB	CAMBER & FLANGES DIAGRAM	AM	Alexandru Marin	SA	Sylvain Auclair	1
BG206B	FLANGE DIAGRAM	AM	Alexandru Marin	SA	Sylvain Auclair	
BG207AB	CAMBER & FLANGES DIAGRAM	AM	Alexandru Marin	SA	Sylvain Auclair	1
BG207B	FLANGE DIAGRAM	AM	Alexandru Marin	SA	Sylvain Auclair	
BG208AB	CAMBER & FLANGES DIAGRAM	AM	Alexandru Marin	SA	Sylvain Auclair	1
BG208B	FLANGE DIAGRAM	AM	Alexandru Marin	SA	Sylvain Auclair	
BG209AB	CAMBER & FLANGES DIAGRAM	AM	Alexandru Marin	SA	Sylvain Auclair	1
BG209B	FLANGE DIAGRAM	AM	Alexandru Marin	SA	Sylvain Auclair	
BG210AB	CAMBER & FLANGES DIAGRAM	AM	Alexandru Marin	SA	Sylvain Auclair	1
BG210B	FLANGE DIAGRAM	AM	Alexandru Marin	SA	Sylvain Auclair	
BG211AB	CAMBER & FLANGES DIAGRAM	AM	Alexandru Marin	SA	Sylvain Auclair	1
BG211B	FLANGE DIAGRAM	AM	Alexandru Marin	SA	Sylvain Auclair	
BG212AB	CAMBER & FLANGES DIAGRAM	AM	Alexandru Marin	SA	Sylvain Auclair	1
BG212B	FLANGE DIAGRAM	AM	Alexandru Marin	SA	Sylvain Auclair	
BG213AB	CAMBER & FLANGES DIAGRAM	AM	Alexandru Marin	SA	Sylvain Auclair	1
BG213B	FLANGE DIAGRAM	AM	Alexandru Marin	SA	Sylvain Auclair	
BG214AB	CAMBER & FLANGES DIAGRAM	AM	Alexandru Marin	SA	Sylvain Auclair	1
BG214B	FLANGE DIAGRAM	AM	Alexandru Marin	SA	Sylvain Auclair	
BG215AB	CAMBER & FLANGES DIAGRAM	AM	Alexandru Marin	SA	Sylvain Auclair	1
BG215B	FLANGE DIAGRAM	AM	Alexandru Marin	SA	Sylvain Auclair	
BG216AB	CAMBER & FLANGES DIAGRAM	AM	Alexandru Marin	SA	Sylvain Auclair	1
BG216B	FLANGE DIAGRAM	AM	Alexandru Marin	SA	Sylvain Auclair	
BG217AB	CAMBER & FLANGES DIAGRAM	AM	Alexandru Marin	SA	Sylvain Auclair	1
BG217B	FLANGE DIAGRAM	AM	Alexandru Marin	SA	Sylvain Auclair	
BG218AB	CAMBER & FLANGES DIAGRAM	AM	Alexandru Marin	SA	Sylvain Auclair	1
BG218B	FLANGE DIAGRAM	AM	Alexandru Marin	SA	Sylvain Auclair	
BG219AB	CAMBER & FLANGES DIAGRAM	AM	Alexandru Marin	SA	Sylvain Auclair	1
BG219B	FLANGE DIAGRAM	AM	Alexandru Marin	SA	Sylvain Auclair	
BG220AB	CAMBER & FLANGES DIAGRAM	AM	Alexandru Marin	SA	Sylvain Auclair	1
BG220B	FLANGE DIAGRAM	AM	Alexandru Marin	SA	Sylvain Auclair	
FB201	FIELD BOLTS	AM	Alexandru Marin	DP	David Pelchat	1
HC201	HORIZONTAL CURVING DIAGRAMS	AM	Alexandru Marin	DP	David Pelchat	
HC202	HORIZONTAL CURVING DIAGRAMS	AM	Alexandru Marin	DP	David Pelchat	
HC203	HORIZONTAL CURVING DIAGRAMS	AM	Alexandru Marin	DP	David Pelchat	
HC204	HORIZONTAL CURVING DIAGRAMS	AM	Alexandru Marin	DP	David Pelchat	
HC205	HORIZONTAL CURVING DIAGRAMS	AM	Alexandru Marin	DP	David Pelchat	
P201	PAINT NOTES	AM	Alexandru Marin	DP	David Pelchat	1
X201	FIELD SPLICE DETAILS	AM	Alexandru Marin	DP	David Pelchat	1
X202	FIELD SPLICE DETAILS	AM	Alexandru Marin	DP	David Pelchat	1
X203	GIRDER DETAILS	AM	Alexandru Marin	DP	David Pelchat	
X204	ABUTMENT K-FRAME DETAILS	AM	Alexandru Marin	DP	David Pelchat	
X205	ABUTMENT & PIER K-FRAME DETAILS	AM	Alexandru Marin	DP	David Pelchat	
X206	PIER K-FRAME DETAILS	AM	Alexandru Marin	DP	David Pelchat	
X207	PIER K-FRAME DETAILS	AM	Alexandru Marin	DP	David Pelchat	
X208	INTERMEDIATE K-FRAME DETAILS	AM	Alexandru Marin	SA	Sylvain Auclair	
201	GIRDER 201A1	AM	Alexandru Marin	DP	David Pelchat	1
202	GIRDER 202B1	AM	Alexandru Marin	DP	David Pelchat	1
203	GIRDER 203C1	AM	Alexandru Marin	DP	David Pelchat	1
204	GIRDER 204D1	AM	Alexandru Marin	DP	David Pelchat	1
205	GIRDER 205A2	AM	Alexandru Marin	DP	David Pelchat	1
206	GIRDER 206B2	AM	Alexandru Marin	DP	David Pelchat	1
207	GIRDER 207C2	AM	Alexandru Marin	DP	David Pelchat	1
208	GIRDER 208D2	AM	Alexandru Marin	DP	David Pelchat	1
209	GIRDER 209A3	AM	Alexandru Marin	DP	David Pelchat	1
210	GIRDER 210B3	AM	Alexandru Marin	DP	David Pelchat	1
211	GIRDER 211C3	AM	Alexandru Marin	DP	David Pelchat	1
212	GIRDER 212D3	AM	Alexandru Marin	DP	David Pelchat	1
213	GIRDER 213A4	AM	Alexandru Marin	DP	David Pelchat	1
214	GIRDER 214B4	AM	Alexandru Marin	DP	David Pelchat	1
215	GIRDER 215C4	AM	Alexandru Marin	DP	David Pelchat	1
216	GIRDER 216D4	AM	Alexandru Marin	DP	David Pelchat	1
217	GIRDER 217A5	AM	Alexandru Marin	DP	David Pelchat	1
218	GIRDER 218B5	AM	Alexandru Marin	DP	David Pelchat	1
219	GIRDER 219C5	AM	Alexandru Marin	DP	David Pelchat	1
220	GIRDER 220D5	AM	Alexandru Marin	DP	David Pelchat	1
221	REAR ABUTMENT K-FRAME	AM	Alexandru Marin	DP	David Pelchat	1
222	REAR ABUTMENT K-FRAME	AM	Alexandru Marin	DP	David Pelchat	1
223	REAR ABUTMENT K-FRAME	AM	Alexandru Marin	DP	David Pelchat	1
224	FORWARD ABUTMENT K-FRAME	AM	Alexandru Marin	DP	David Pelchat	1
225	FORWARD ABUTMENT K-FRAME	AM	Alexandru Marin	DP	David Pelchat	1
226	FORWARD ABUTMENT K-FRAME	AM	Alexandru Marin	DP	David Pelchat	1
227	PIER 1 K-FRAME	AM	Alexandru Marin	DP	David Pelchat	1
228	PIER 1 K-FRAME	AM	Alexandru Marin	DP	David Pelchat	1
229	PIER 1 K-FRAME	AM	Alexandru Marin	DP	David Pelchat	1
230	PIER 2 K-FRAME	AM	Alexandru Marin	DP	David Pelchat	1
231	PIER 2 K-FRAME	AM	Alexandru Marin	DP	David Pelchat	1
232	PIER 2 K-FRAME	AM	Alexandru Marin	DP	David Pelchat	1
233	INTERMEDIATE K-FRAME	AM	Alexandru Marin	SA	Sylvain Auclair	1
234	INTERMEDIATE K-FRAME	AM	Alexandru Marin	SA	Sylvain Auclair	1
235	INTERMEDIATE K-FRAME	AM	Alexandru Marin	SA	Sylvain Auclair	1
236	INTERMEDIATE K-FRAME	AM	Alexandru Marin	SA	Sylvain Auclair	1
237	INTERMEDIATE K-FRAME	AM	Alexandru Marin	SA	Sylvain Auclair	1
238	INTERMEDIATE K-FRAME	AM	Alexandru Marin	SA	Sylvain Auclair	1
239	INTERMEDIATE K-FRAME	AM	Alexandru Marin	SA	Sylvain Auclair	1
240	INTERMEDIATE K-FRAME	AM	Alexandru Marin	SA	Sylvain Auclair	1
241	INTERMEDIATE K-FRAME	AM	Alexandru Marin	SA	Sylvain Auclair	1
242	INTERMEDIATE K-FRAME	AM	Alexandru Marin	SA	Sylvain Auclair	1
243	INTERMEDIATE K-FRAME	AM	Alexandru Marin	SA	Sylvain Auclair	1
244	INTERMEDIATE K-FRAME	AM	Alexandru Marin	SA	Sylvain Auclair	1

All Sheets reviewed and no exceptions taken.

DFT

STATE OF OHIO
DAVID F. TRAINI
E-48751
REGISTERED
PROFESSIONAL ENGINEER

Dal 7.2

SHOP DRAWING REVIEW

REVIEW IS FOR GENERAL COMPLIANCE WITH CONTRACT DOCUMENTS NO RESPONSIBILITY ASSUMED FOR CORRECTNESS OF DIMENSIONS OR DETAILS

NO EXCEPTIONS TAKEN	DFT
MAKE CORRECTIONS NOTED	
AMEND & RESUBMIT	
REJECTED – SEE REMARKS	

E.L. ROBINSON ENGINEERING

Date 10-24-19 By Dal 7.2

NO.	DATE	REMARKS	BY
2	10-10-19	REVISION 1 ADDED	DP
1	08-01-19	DRAWING FA201 ADDED	EG

REVISIONS

Veritas STEEL
2-EAU CLAIRE, WI 3-WAUSAU, WI 4-PALATKA, FL
IENCA 1605

STRUCTURE: CUY-010-1976L, OH-10 WESTBOUND OVER GCRTA BLUE AND GREEN LINES
LOCATION: CLEVELAND, OHIO CUYAHOGA COUNTY
PROJECT NO. 17-3000
ENGINEER: MICHAEL BAKER INTERNATIONAL
CONTRACTOR: KOKOSING

ITEM: INDEX SHEET
SURFACE PREP.: SEE P201 OPEN HOLES: $1\frac{1}{16}$"Ø (U.N.O.)
PAINT: SEE P201

APPROVAL	DRAWN AM 06/03/19	SHEET NO.	PLANT	ORDER NO.
SHOP	CHECKED DP 07/10/19	INDEX	3	317023A

WESTBOUND

DWG NO.	DESCRIPTION	Detailer initials	Detailer name	Checker inititals	Checker name	Revision
GN201	GENERAL NOTES	AM	Alexandru Marin	DP	David Pelchat	1
E201	ERECTION PLAN	AM	Alexandru Marin	DP	David Pelchat	1
E202	ERECTION PLAN	AM	Alexandru Marin	DP	David Pelchat	1
E203	ERECTION PLAN - SECTIONS	AM	Alexandru Marin	DP	David Pelchat	1
E204	ERECTION PLAN - SECTIONS	AM	Alexandru Marin	DP	David Pelchat	1
E205	ERECTION PLAN - FIELD SPLICES	AM	Alexandru Marin	DP	David Pelchat	1
BD201	BLOCKING DIAGRAM	AM	Alexandru Marin	DP	David Pelchat	
BD202	BLOCKING DIAGRAM	AM	Alexandru Marin	DP	David Pelchat	
FA201	FULL ASSEMBLY DIAGRAM	AM	Alexandru Marin	EG	Eric Gingras	
BG201AB	CAMBER & FLANGES DIAGRAM	AM	Alexandru Marin	SA	Sylvain Auclair	1
BG201B	FLANGE DIAGRAM	AM	Alexandru Marin	SA	Sylvain Auclair	
BG202AB	CAMBER & FLANGES DIAGRAM	AM	Alexandru Marin	SA	Sylvain Auclair	1
BG202B	FLANGE DIAGRAM	AM	Alexandru Marin	SA	Sylvain Auclair	
BG203AB	CAMBER & FLANGES DIAGRAM	AM	Alexandru Marin	SA	Sylvain Auclair	1
BG203B	FLANGE DIAGRAM	AM	Alexandru Marin	SA	Sylvain Auclair	
BG204AB	CAMBER & FLANGES DIAGRAM	AM	Alexandru Marin	SA	Sylvain Auclair	1
BG204B	FLANGE DIAGRAM	AM	Alexandru Marin	SA	Sylvain Auclair	
BG205AB	CAMBER & FLANGES DIAGRAM	AM	Alexandru Marin	SA	Sylvain Auclair	1
BG205B	FLANGE DIAGRAM	AM	Alexandru Marin	SA	Sylvain Auclair	
BG206AB	CAMBER & FLANGES DIAGRAM	AM	Alexandru Marin	SA	Sylvain Auclair	1
BG206B	FLANGE DIAGRAM	AM	Alexandru Marin	SA	Sylvain Auclair	
BG207AB	CAMBER & FLANGES DIAGRAM	AM	Alexandru Marin	SA	Sylvain Auclair	1
BG207B	FLANGE DIAGRAM	AM	Alexandru Marin	SA	Sylvain Auclair	
BG208AB	CAMBER & FLANGES DIAGRAM	AM	Alexandru Marin	SA	Sylvain Auclair	1
BG208B	FLANGE DIAGRAM	AM	Alexandru Marin	SA	Sylvain Auclair	
BG209AB	CAMBER & FLANGES DIAGRAM	AM	Alexandru Marin	SA	Sylvain Auclair	1
BG209B	FLANGE DIAGRAM	AM	Alexandru Marin	SA	Sylvain Auclair	
BG210AB	CAMBER & FLANGES DIAGRAM	AM	Alexandru Marin	SA	Sylvain Auclair	1
BG210B	FLANGE DIAGRAM	AM	Alexandru Marin	SA	Sylvain Auclair	
BG211AB	CAMBER & FLANGES DIAGRAM	AM	Alexandru Marin	SA	Sylvain Auclair	1
BG211B	FLANGE DIAGRAM	AM	Alexandru Marin	SA	Sylvain Auclair	
BG212AB	CAMBER & FLANGES DIAGRAM	AM	Alexandru Marin	SA	Sylvain Auclair	1
BG212B	FLANGE DIAGRAM	AM	Alexandru Marin	SA	Sylvain Auclair	
BG213AB	CAMBER & FLANGES DIAGRAM	AM	Alexandru Marin	SA	Sylvain Auclair	1
BG213B	FLANGE DIAGRAM	AM	Alexandru Marin	SA	Sylvain Auclair	
BG214AB	CAMBER & FLANGES DIAGRAM	AM	Alexandru Marin	SA	Sylvain Auclair	1
BG214B	FLANGE DIAGRAM	AM	Alexandru Marin	SA	Sylvain Auclair	
BG215AB	CAMBER & FLANGES DIAGRAM	AM	Alexandru Marin	SA	Sylvain Auclair	1
BG215B	FLANGE DIAGRAM	AM	Alexandru Marin	SA	Sylvain Auclair	
BG216AB	CAMBER & FLANGES DIAGRAM	AM	Alexandru Marin	SA	Sylvain Auclair	1
BG216B	FLANGE DIAGRAM	AM	Alexandru Marin	SA	Sylvain Auclair	
BG217AB	CAMBER & FLANGES DIAGRAM	AM	Alexandru Marin	SA	Sylvain Auclair	1
BG217B	FLANGE DIAGRAM	AM	Alexandru Marin	SA	Sylvain Auclair	
BG218AB	CAMBER & FLANGES DIAGRAM	AM	Alexandru Marin	SA	Sylvain Auclair	1
BG218B	FLANGE DIAGRAM	AM	Alexandru Marin	SA	Sylvain Auclair	
BG219AB	CAMBER & FLANGES DIAGRAM	AM	Alexandru Marin	SA	Sylvain Auclair	1
BG219B	FLANGE DIAGRAM	AM	Alexandru Marin	SA	Sylvain Auclair	
BG220AB	CAMBER & FLANGES DIAGRAM	AM	Alexandru Marin	SA	Sylvain Auclair	1
BG220B	FLANGE DIAGRAM	AM	Alexandru Marin	SA	Sylvain Auclair	
FB201	FIELD BOLTS	AM	Alexandru Marin	DP	David Pelchat	1
HC201	HORIZONTAL CURVING DIAGRAMS	AM	Alexandru Marin	DP	David Pelchat	
HC202	HORIZONTAL CURVING DIAGRAMS	AM	Alexandru Marin	DP	David Pelchat	
HC203	HORIZONTAL CURVING DIAGRAMS	AM	Alexandru Marin	DP	David Pelchat	
HC204	HORIZONTAL CURVING DIAGRAMS	AM	Alexandru Marin	DP	David Pelchat	
HC205	HORIZONTAL CURVING DIAGRAMS	AM	Alexandru Marin	DP	David Pelchat	
P201	PAINT NOTES	AM	Alexandru Marin	DP	David Pelchat	1
X201	FIELD SPLICE DETAILS	AM	Alexandru Marin	DP	David Pelchat	1
X202	FIELD SPLICE DETAILS	AM	Alexandru Marin	DP	David Pelchat	1
X203	GIRDER DETAILS	AM	Alexandru Marin	DP	David Pelchat	
X204	ABUTMENT K-FRAME DETAILS	AM	Alexandru Marin	DP	David Pelchat	
X205	ABUTMENT & PIER K-FRAME DETAILS	AM	Alexandru Marin	DP	David Pelchat	
X206	PIER K-FRAME DETAILS	AM	Alexandru Marin	DP	David Pelchat	
X207	PIER K-FRAME DETAILS	AM	Alexandru Marin	DP	David Pelchat	
X208	INTERMEDIATE K-FRAME DETAILS	AM	Alexandru Marin	SA	Sylvain Auclair	
201	GIRDER 201A1	AM	Alexandru Marin	DP	David Pelchat	1
202	GIRDER 202B1	AM	Alexandru Marin	DP	David Pelchat	1
203	GIRDER 203C1	AM	Alexandru Marin	DP	David Pelchat	1
204	GIRDER 204D1	AM	Alexandru Marin	DP	David Pelchat	1
205	GIRDER 205A2	AM	Alexandru Marin	DP	David Pelchat	1
206	GIRDER 206B2	AM	Alexandru Marin	DP	David Pelchat	1
207	GIRDER 207C2	AM	Alexandru Marin	DP	David Pelchat	1
208	GIRDER 208D2	AM	Alexandru Marin	DP	David Pelchat	1
209	GIRDER 209A3	AM	Alexandru Marin	DP	David Pelchat	1
210	GIRDER 210B3	AM	Alexandru Marin	DP	David Pelchat	1
211	GIRDER 211C3	AM	Alexandru Marin	DP	David Pelchat	1
212	GIRDER 212D3	AM	Alexandru Marin	DP	David Pelchat	1
213	GIRDER 213A4	AM	Alexandru Marin	DP	David Pelchat	1
214	GIRDER 214B4	AM	Alexandru Marin	DP	David Pelchat	1
215	GIRDER 215C4	AM	Alexandru Marin	DP	David Pelchat	1
216	GIRDER 216D4	AM	Alexandru Marin	DP	David Pelchat	1
217	GIRDER 217A5	AM	Alexandru Marin	DP	David Pelchat	1
218	GIRDER 218B5	AM	Alexandru Marin	DP	David Pelchat	1
219	GIRDER 219C5	AM	Alexandru Marin	DP	David Pelchat	1
220	GIRDER 220D5	AM	Alexandru Marin	DP	David Pelchat	1
221	REAR ABUTMENT K-FRAME	AM	Alexandru Marin	DP	David Pelchat	1
222	REAR ABUTMENT K-FRAME	AM	Alexandru Marin	DP	David Pelchat	1
223	REAR ABUTMENT K-FRAME	AM	Alexandru Marin	DP	David Pelchat	1
224	FORWARD ABUTMENT K-FRAME	AM	Alexandru Marin	DP	David Pelchat	1
225	FORWARD ABUTMENT K-FRAME	AM	Alexandru Marin	DP	David Pelchat	1
226	FORWARD ABUTMENT K-FRAME	AM	Alexandru Marin	DP	David Pelchat	1
227	PIER 1 K-FRAME	AM	Alexandru Marin	DP	David Pelchat	1
228	PIER 1 K-FRAME	AM	Alexandru Marin	DP	David Pelchat	1
229	PIER 1 K-FRAME	AM	Alexandru Marin	DP	David Pelchat	1
230	PIER 2 K-FRAME	AM	Alexandru Marin	DP	David Pelchat	1
231	PIER 2 K-FRAME	AM	Alexandru Marin	DP	David Pelchat	1
232	PIER 2 K-FRAME	AM	Alexandru Marin	DP	David Pelchat	1
233	INTERMEDIATE K-FRAME	AM	Alexandru Marin	SA	Sylvain Auclair	1
234	INTERMEDIATE K-FRAME	AM	Alexandru Marin	SA	Sylvain Auclair	1
235	INTERMEDIATE K-FRAME	AM	Alexandru Marin	SA	Sylvain Auclair	1
236	INTERMEDIATE K-FRAME	AM	Alexandru Marin	SA	Sylvain Auclair	1
237	INTERMEDIATE K-FRAME	AM	Alexandru Marin	SA	Sylvain Auclair	1
238	INTERMEDIATE K-FRAME	AM	Alexandru Marin	SA	Sylvain Auclair	1
239	INTERMEDIATE K-FRAME	AM	Alexandru Marin	SA	Sylvain Auclair	1
240	INTERMEDIATE K-FRAME	AM	Alexandru Marin	SA	Sylvain Auclair	1
241	INTERMEDIATE K-FRAME	AM	Alexandru Marin	SA	Sylvain Auclair	1
242	INTERMEDIATE K-FRAME	AM	Alexandru Marin	SA	Sylvain Auclair	1
243	INTERMEDIATE K-FRAME	AM	Alexandru Marin	SA	Sylvain Auclair	1
244	INTERMEDIATE K-FRAME	AM	Alexandru Marin	SA	Sylvain Auclair	1

NO.	DATE	REMARKS	BY
2	10-10-19	REVISION 1 ADDED	DP
1	08-01-19	DRAWING FA201 ADDED	EG

REVISIONS

Veritas STEEL

2-EAU CLAIRE, WI 3-WAUSAU, WI 4-PALATKA, FL

IENCA 1605

STRUCTURE: CUY-010-1976L, OH-10 WESTBOUND OVER GCRTA BLUE AND GREEN LINES

LOCATION: CLEVELAND, OHIO CUYAHOGA COUNTY

PROJECT NO. 17-3000

ENGINEER: MICHAEL BAKER INTERNATIONAL

CONTRACTOR: KOKOSING

ITEM: INDEX SHEET

SURFACE PREP.: SEE P201 OPEN HOLES: $1\frac{1}{16}$"Ø (U.N.O.)

PAINT: SEE P201

APPROVAL	DRAWN AM 06/03/19	SHEET NO.	PLANT	ORDER NO.
SHOP	CHECKED DP 07/10/19	INDEX	3	317023A

LINE	SHIP MARK	NO. OF PCS.	ASS'Y MARK	MATERIAL SHAPE	LENGTH FT.	LENGTH IN.	MATERIAL SPEC.	ITEM NO.	REMARKS
1	201A1	ONE		GIRDER					PART. PAINTED 25765
2		1	201TF1	PL 1 x 20	67	11 11/16	A709-50WT2	2001	CVN 4622
3		1	201TF2	PL 1 x 20	17	7 15/16	A709-50WT2	2119	CVN 1201
4		1	201WB1	PL 5/8 x 58	15	5 1/2	A709-50WT2	2123	CVN 1905
5		1	201WB2	PL 5/8 x 58	70	0	A709-50WT2	2005	CVN 8627
6		1	201BF1	PL 1 3/8 x 22	67	11 11/16	A709-50WT2	2009	CVN 6991
7		1	201BF2	PL 1 3/8 x 22	17	7 3/4	A709-50WT2	2127	CVN 1815
8		1	x203a	PL 1/2 x 9	4	10	A709-50WT2	2059	CVN 74
9		2	x203d	PL 1 1/8 x 9	4	10	A709-50WT2	2057	CVN M1E 333
10		3	x203g	PL 1/2 x 8	4	10	A709-50WT2	2058	CVN 197

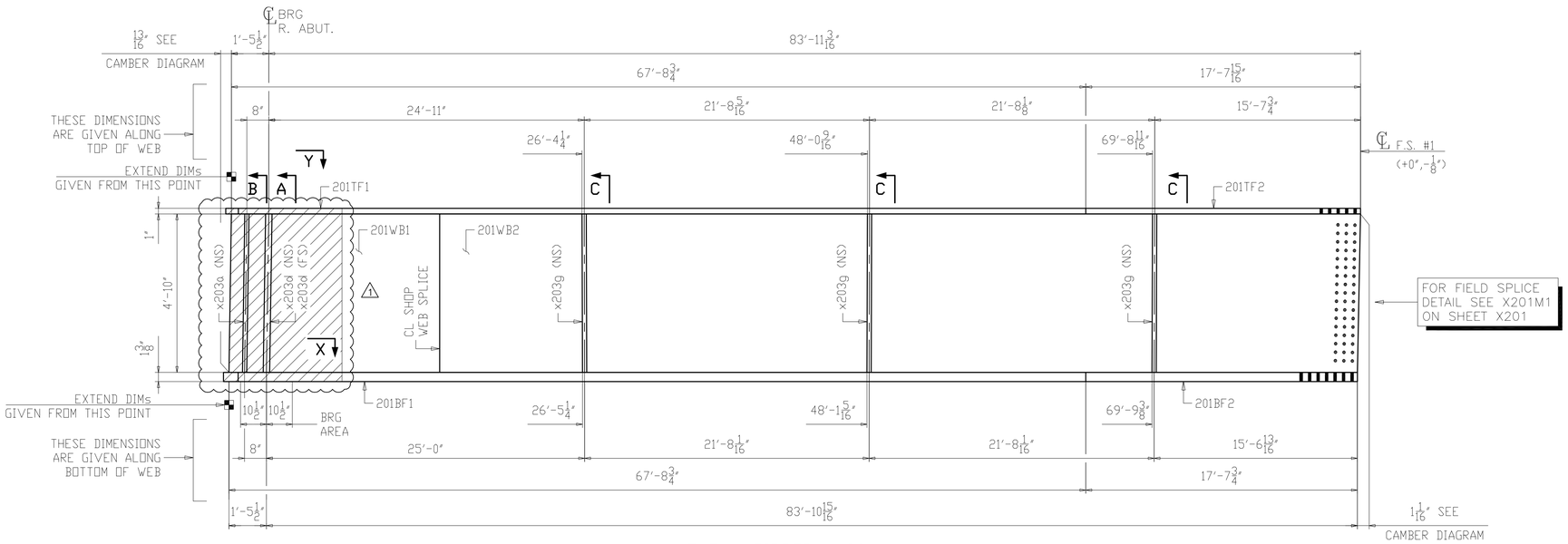

ONE ~ GIRDER ~ 201A1

(PARTIALLY PAINTED)

1. FOR GENERAL NOTES SEE SHEET GN201.
2. FOR PAINT NOTES SEE SHEET P201.
3. FOR CAMBER AND FLANGE DIAGRAM SEE SHEET BG201.
4. FOR HORIZONTAL CURVING DIAGRAMS SEE SHEET HC201.
5. FOR GIRDER STANDARD DETAILS SEE SHEET x203.
6. FOR FIELD SPLICE DETAILS SEE X201.
7. T2 - DENOTES MATERIAL SUBJECT TO CHARPY V-NOTCH TESTING (ZONE 2).
8. ALL MATERIAL A709-50WT2 (UN).
9. BRG AREA - DENOTES AREA TO BE FLAT AND TRUE TO RECEIVE SOLE PLATE.
10. - DENOTES PAINTED ZONE.

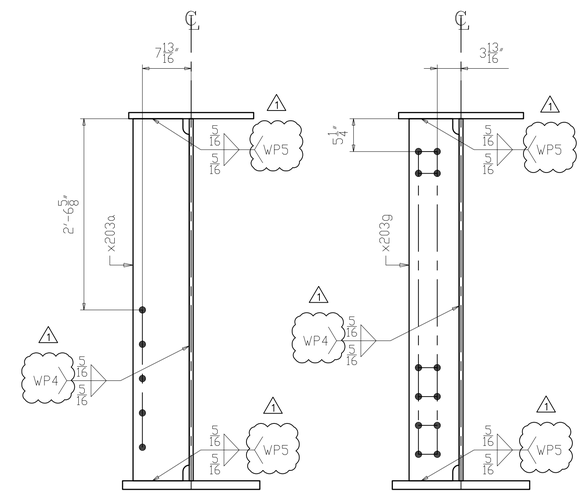

SECTION B
(REAR ABUTMENT K-FRAME)

SECTION C
(INTERMEDIATE K-FRAME)

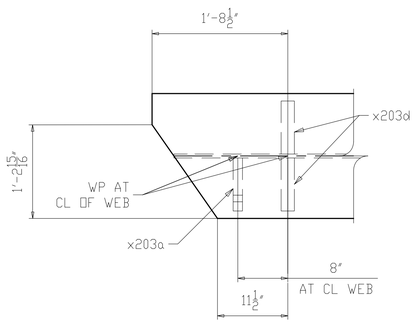

SECTION Y

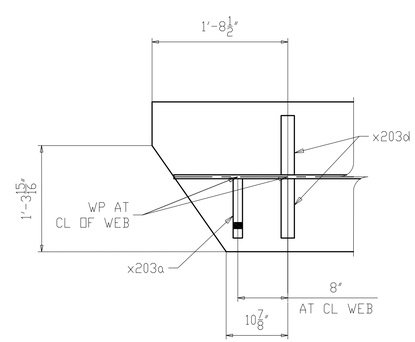

SECTION X

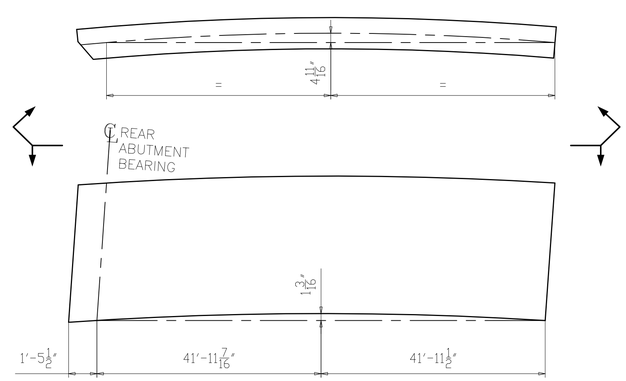

CAMBER & CURVE DIAGRAM

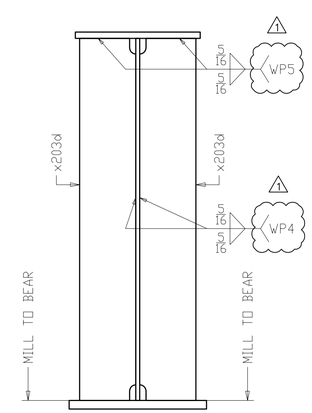

SECTION A
(BEARING REAR ABUTMENT)

NO.	DATE	REMARKS	BY
1	10/10/19	AS PER APPROVAL COMMENTS / WP # ADDED	DP

REVISIONS

Veritas STEEL
2-EAU CLAIRE, WI 3-WAUSAU, WI 4-PALATKA, FL
IAS 1605

STRUCTURE: CUY-010-1976L, OH-10 WESTBOUND OVER GCRTA BLUE AND GREEN LINES
LOCATION: CLEVELAND, OHIO CUYAHOGA COUNTY
PROJECT NO.: 17-3000
ENGINEER: MICHAEL BAKER INTERNATIONAL
CONTRACTOR: KOKOSING

ITEM: GIRDER 201A1
SURFACE PREP.: SEE P201 OPEN HOLES: 1 1/16"Ø (U.N.O.)
PAINT: SEE P201

APPROVAL	DRAWN AM 06/07/19	SHEET NO.	PLANT	ORDER NO.
SHOP	CHECKED DP 07/10/19	201	3	317023A-20

LINE	SHIP MARK	NO. OF PCS.	ASS'Y MARK	MATERIAL SHAPE	LENGTH FT.	LENGTH IN.	MATERIAL SPEC.	ITEM NO.	REMARKS
1	202B1	ONE		GIRDER					PART. PAINTED 27551
2		1	202TF1	PL 1 x 20	22	4 5 /16	A709-50WT2	2120	CVN 1520
3		1	202TF2	PL 1 x 20	67	11 11/16	A709-50WT2	2002	CVN 4622
4		1	202WB1	PL 5/8 x 58	70	0	A709-50WT2	2006	CVN 8627
5		1	202WB2	PL 5/8 x 58	20	2	A709-50WT2	2124	CVN 2486
6		1	202BF1	PL 1 3/8 x 22	22	4 1/8	A709-50WT2	2128	CVN 2298
7		1	202BF2	PL 1 3/8 x 22	67	11 11/16	A709-50WT2	2010	CVN 6991
8		1	x203a	PL 1/2 x 9	4	10	A709-50WT2	2059	CVN 74
9		1	x203b	PL 1/2 x 9	4	10	A709-50WT2	2059	CVN 74
10		2	x203d	PL 1 1/8 x 9	4	10	A709-50WT2	2057	CVN MIE 333
11		8	x203g	PL 1/2 x 8	4	10	A709-50WT2	2058	CVN 526

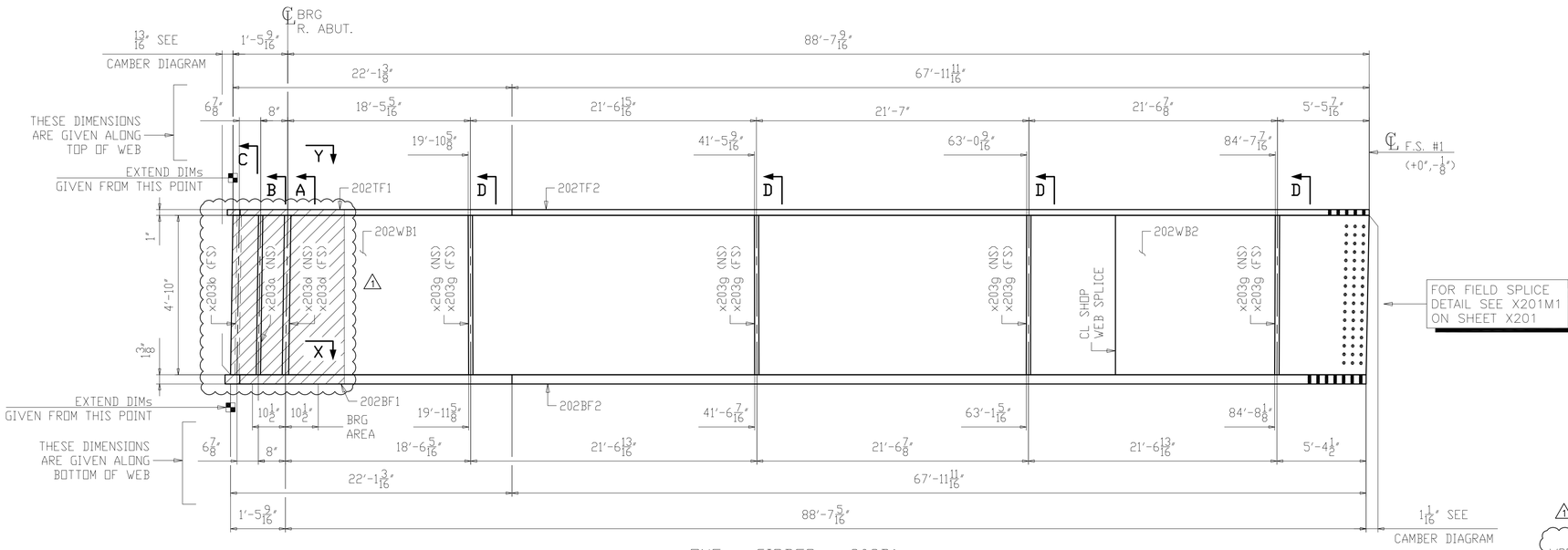

ONE ~ GIRDER ~ 202B1

(PARTIALLY PAINTED)

1. FOR GENERAL NOTES SEE SHEET GN201.
2. FOR PAINT NOTES SEE SHEET P201.
3. FOR CAMBER AND FLANGE DIAGRAM SEE SHEET BG202.
4. FOR HORIZONTAL CURVING DIAGRAMS SEE SHEET HC201.
5. FOR GIRDER STANDARD DETAILS SEE SHEET x203.
6. FOR FIELD SPLICE DETAILS SEE X201.
7. T2 - DENOTES MATERIAL SUBJECT TO CHARPY V-NOTCH TESTING (ZONE 2).
8. ALL MATERIAL A709-50WT2 (UN).
9. BRG AREA - DENOTES AREA TO BE FLAT AND TRUE TO RECEIVE SOLE PLATE.
10. ▨ - DENOTES PAINTED ZONE.

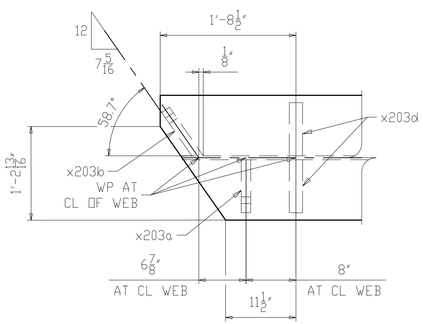

SECTION Y

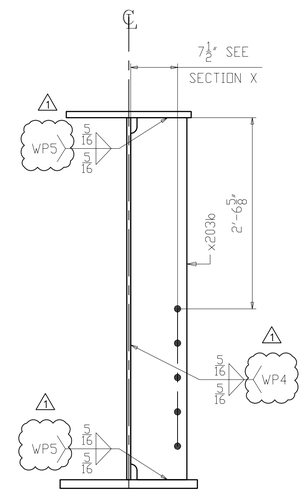

SECTION C
(REAR ABUTMENT K-FRAME)

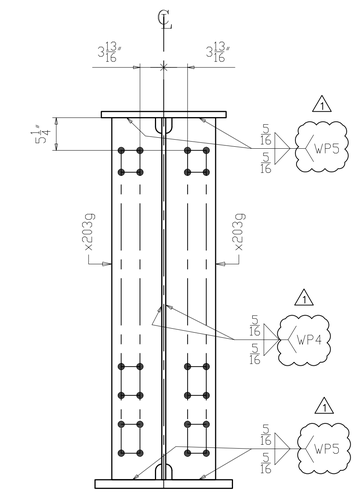

SECTION D
(INTERMEDIATE K-FRAME)

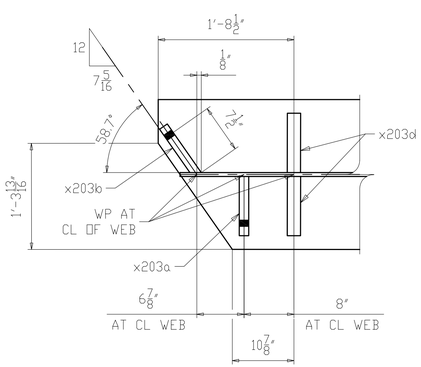

SECTION X

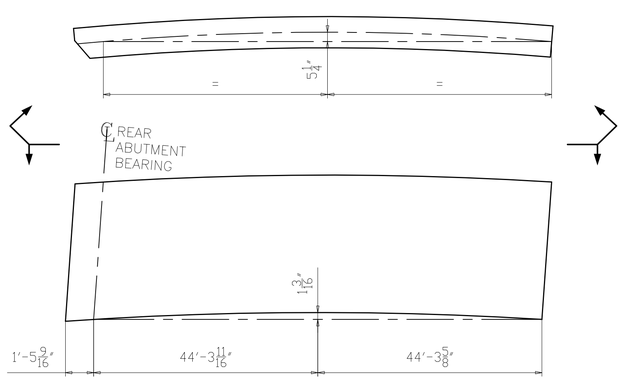

CAMBER & CURVE DIAGRAM

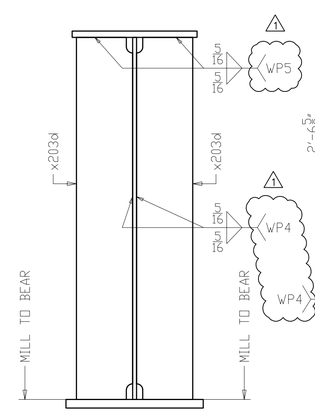

SECTION A
(BEARING REAR ABUTMENT)

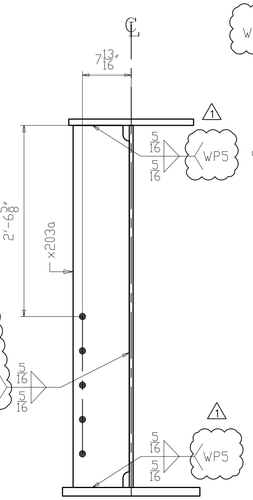

SECTION B
(REAR ABUTMENT K-FRAME)

NO.	DATE	REMARKS	BY
1	10/10/19	AS PER APPROVAL COMMENTS / WP # ADDED	DP

REVISIONS

Veritas STEEL
2-EAU CLAIRE, WI 3-WAUSAU, WI 4-PALATKA, FL
IAS NDT 1605

STRUCTURE: CUY-010-1976L, OH-10 WESTBOUND OVER GCRTA BLUE AND GREEN LINES
LOCATION: CLEVELAND, OHIO CUYAHOGA COUNTY
PROJECT NO.: 17-3000
ENGINEER: MICHAEL BAKER INTERNATIONAL
CONTRACTOR: KOKOSING

ITEM: GIRDER 202B1
SURFACE PREP.: SEE P201 OPEN HOLES: 1 1/16"Ø (U.N.O.)
PAINT: SEE P201

APPROVAL	DRAWN AM 06/07/19	SHEET NO.	PLANT	ORDER NO.
SHOP	CHECKED DP 07/10/19	202	3	317023A-20

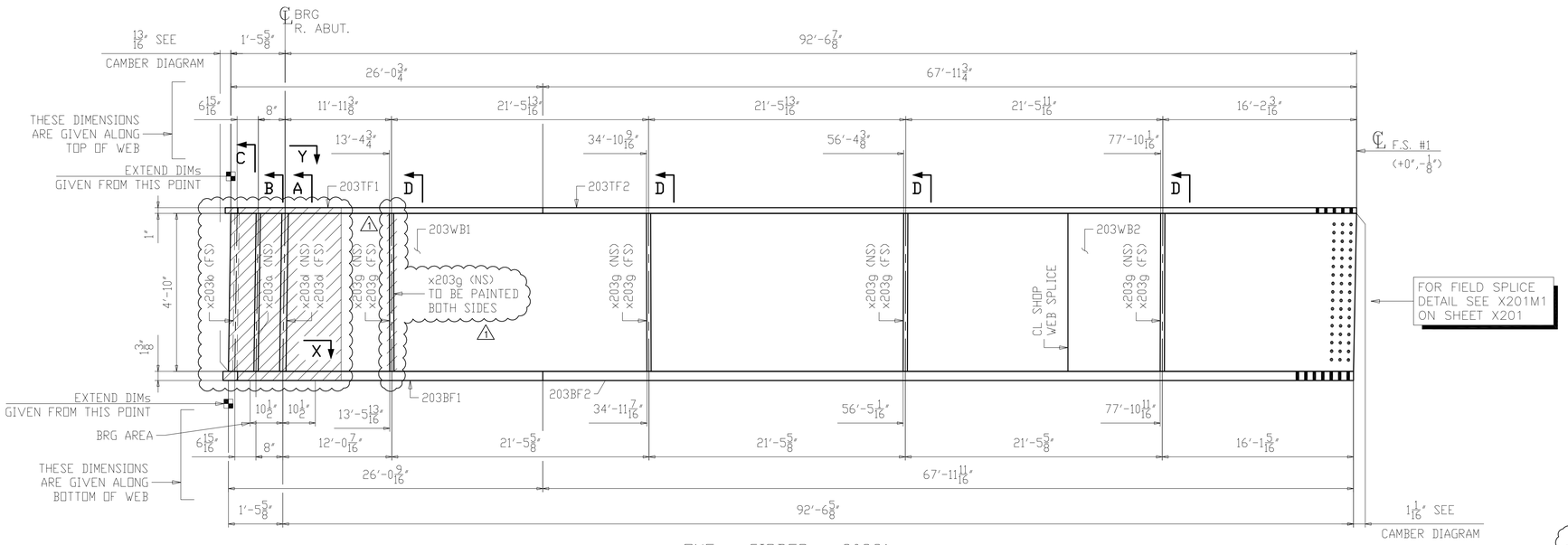

ONE ~ GIRDER ~ 203C1

(PARTIALLY PAINTED)

1. FOR GENERAL NOTES SEE SHEET GN201.
2. FOR PAINT NOTES SEE SHEET P201.
3. FOR CAMBER AND FLANGE DIAGRAM SEE SHEET BG203.
4. FOR HORIZONTAL CURVING DIAGRAMS SEE SHEET HC201.
5. FOR GIRDER STANDARD DETAILS SEE SHEET x203.
6. FOR FIELD SPLICE DETAILS SEE X201.
7. T2 - DENOTES MATERIAL SUBJECT TO CHARPY V-NOTCH TESTING (ZONE 2).
8. ALL MATERIAL A709-50WT2 (UN).
9. BRG AREA - DENOTES AREA TO BE FLAT AND TRUE TO RECEIVE SOLE PLATE.
10. ▨ - DENOTES PAINTED ZONE. △1

LINE	SHIP MARK	NO. OF PCS.	ASS'Y MARK	MATERIAL SHAPE	LENGTH FT.	LENGTH IN.	MATERIAL SPEC.	ITEM NO.	REMARKS
1	203C1	ONE		GIRDER					PART. PAINTED 28721
2		1	203TF1	PL 1 x 20	26	3 5/8	A709-50WT2	2121	CVN 1789
3		1	203TF2	PL 1 x 20	67	11 3/4	A709-50WT2	2003	CVN 4623
4		1	203WB1	PL 5/8 x 58	70	0	A709-50WT2	2007	CVN 8627
5		1	203WB2	PL 5/8 x 58	24	1 5/16	A709-50WT2	2125	CVN 2980
6		1	203BF1	PL 1 3/8 x 22	26	3 7/16	A709-50WT2	2129	CVN 2704
7		1	203BF2	PL 1 3/8 x 22	67	11 11/16	A709-50WT2	2011	CVN 6991
8		1	x203a	PL 1/2 x 9	4	10	A709-50WT2	2059	CVN 74
9		1	x203b	PL 1/2 x 9	4	10	A709-50WT2	2059	CVN 74
10		2	x203d	PL 1 1/8 x 9	4	10	A709-50WT2	2057	CVN M1E 333
11		8	x203g	PL 1/2 x 8	4	10	A709-50WT2	2058	CVN 526

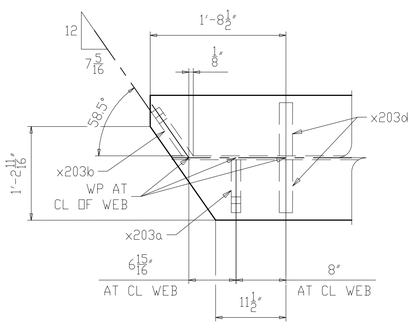

SECTION Y

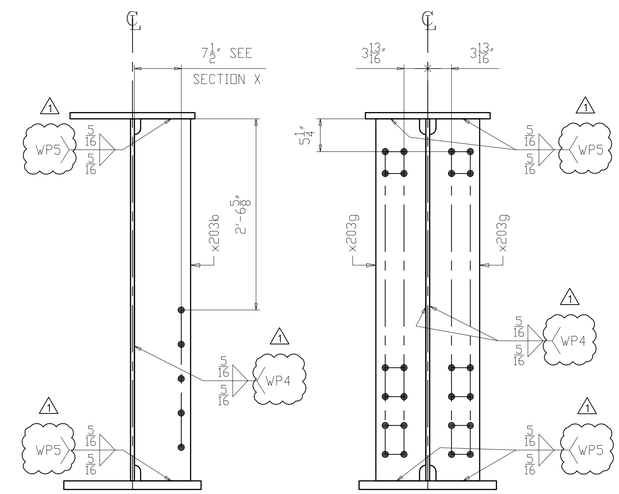

SECTION C
(REAR ABUTMENT K-FRAME)

SECTION D
(INTERMEDIATE K-FRAME)

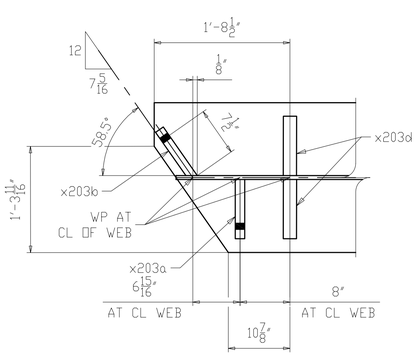

SECTION X

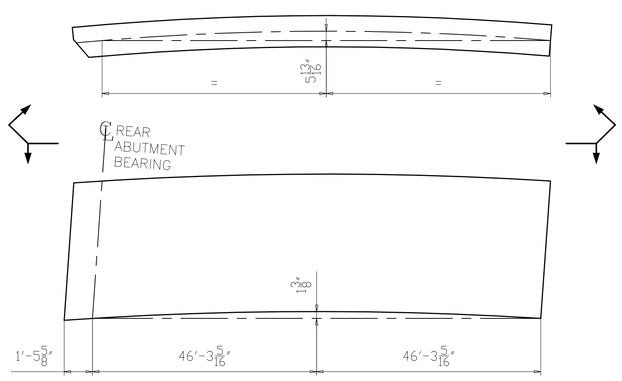

CAMBER & CURVE DIAGRAM

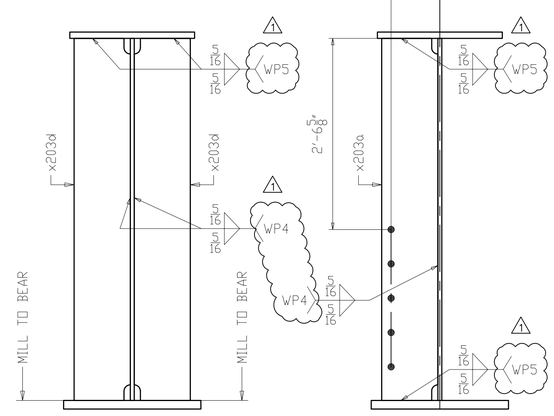

SECTION A
(BEARING REAR ABUTMENT)

SECTION B
(REAR ABUTMENT K-FRAME)

NO.	DATE	REMARKS	BY
1	10/10/19	AS PER APPROVAL COMMENTS / WP # ADDED	DP

REVISIONS

Veritas STEEL
2-EAU CLAIRE, WI 3-WAUSAU, WI 4-PALATKA, FL
IAS NCA 1605

STRUCTURE: CUY-010-1976L, OH-10 WESTBOUND OVER GCRTA BLUE AND GREEN LINES
LOCATION: CLEVELAND, OHIO CUYAHOGA COUNTY
PROJECT NO.: 17-3000
ENGINEER: MICHAEL BAKER INTERNATIONAL
CONTRACTOR: KOKOSING

ITEM: GIRDER 203C1
SURFACE PREP.: SEE P201 OPEN HOLES: 1 1/16"Ø (U.N.O.)
PAINT: SEE P201

APPROVAL	DRAWN AM 06/07/19	SHEET NO.	PLANT	ORDER NO.
SHOP	CHECKED DP 07/10/19	203	3	317023A-20

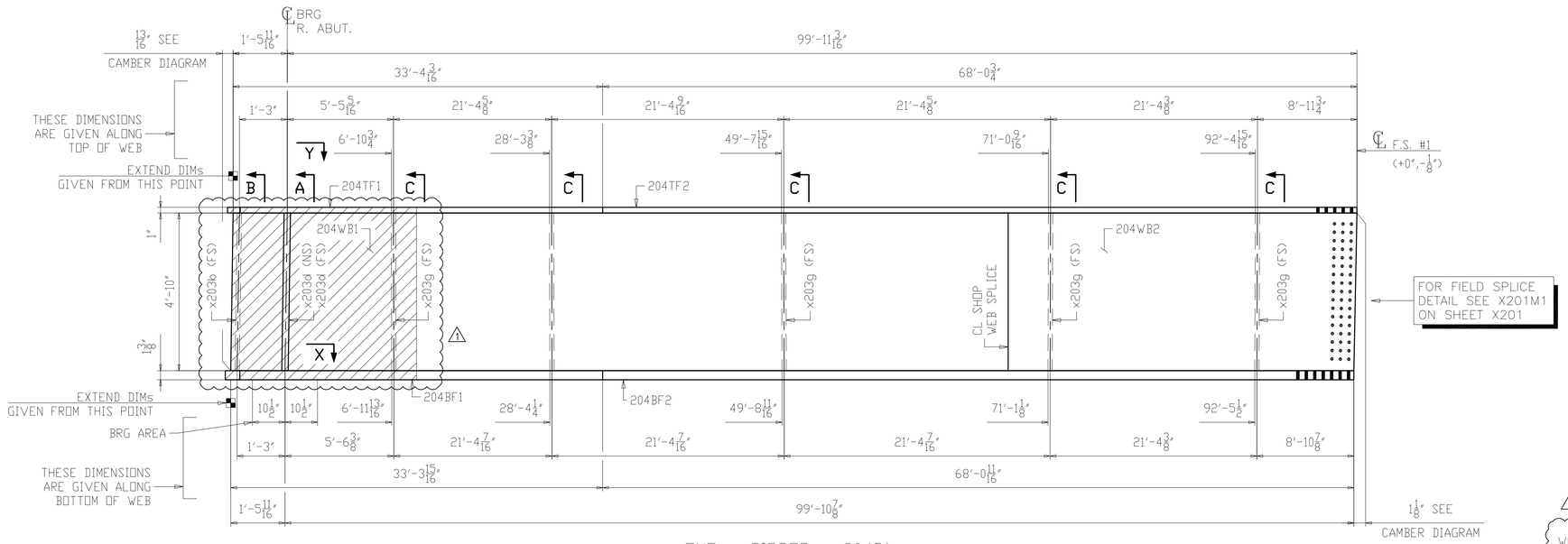

LINE	SHIP MARK	NO. OF PCS.	ASS'Y MARK	MATERIAL SHAPE	LENGTH FT.	LENGTH IN.	MATERIAL SPEC.	ITEM NO.	REMARKS
1	204D1	ONE		GIRDER					PART. PAINTED 30606
2		1	204TF1	PL 1 x 20	33	7	A709-50WT2	2122	CVN 2284
3		1	204TF2	PL 1 x 20	68	0 3/4	A709-50WT2	2004	CVN 4628
4		1	204WB1	PL 5/8 x 58	70	0	A709-50WT2	2008	CVN 8627
5		1	204WB2	PL 5/8 x 58	31	5 11/16	A709-50WT2	2126	CVN 3879
6		1	204BF1	PL 1 3/8 x 22	33	6 3/4	A709-50WT2	2130	CVN 3452
7		1	204BF2	PL 1 3/8 x 22	68	0 11/16	A709-50WT2	2012	CVN 7000
8		1	x203b	PL 1/2 x 9	4	10	A709-50WT2	2059	CVN 74
9		2	x203d	PL 1 1/8 x 9	4	10	A709-50WT2	2057	CVN MIE 333
10		5	x203g	PL 1/2 x 8	4	10	A709-50WT2	2058	CVN 329

ONE ~ GIRDER ~ 204D1

(PARTIALLY PAINTED)

1. FOR GENERAL NOTES SEE SHEET GN201.
2. FOR PAINT NOTES SEE SHEET P201.
3. FOR CAMBER AND FLANGE DIAGRAM SEE SHEET BG204.
4. FOR HORIZONTAL CURVING DIAGRAMS SEE SHEET HC201.
5. FOR GIRDER STANDARD DETAILS SEE SHEET x203.
6. FOR FIELD SPLICE DETAILS SEE X201.
7. T2 - DENOTES MATERIAL SUBJECT TO CHARPY V-NOTCH TESTING (ZONE 2).
8. ALL MATERIAL A709-50WT2 (UN).
9. BRG AREA - DENOTES AREA TO BE FLAT AND TRUE TO RECEIVE SOLE PLATE.
10. ▨ - DENOTES PAINTED ZONE. △1

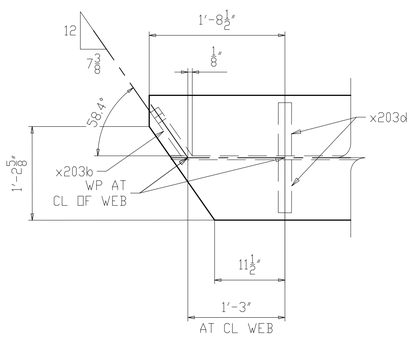

SECTION Y

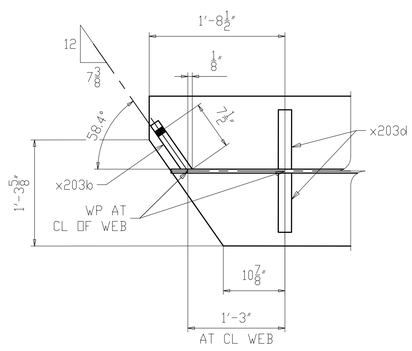

SECTION X

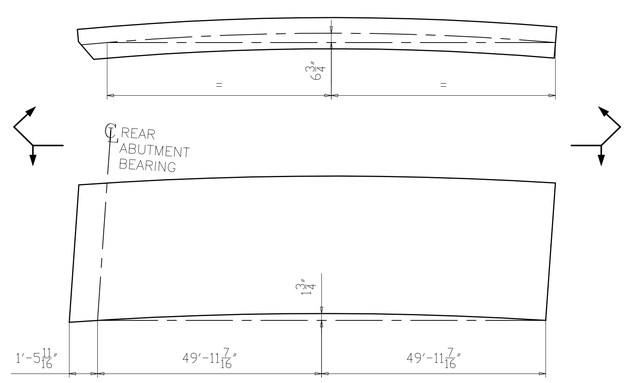

CAMBER & CURVE DIAGRAM

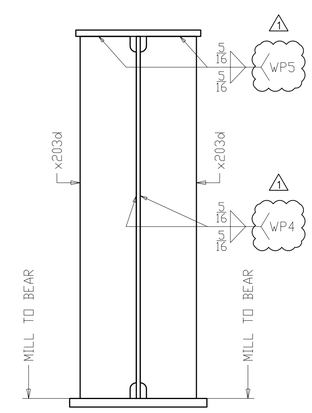

SECTION A

(BEARING REAR ABUTMENT)

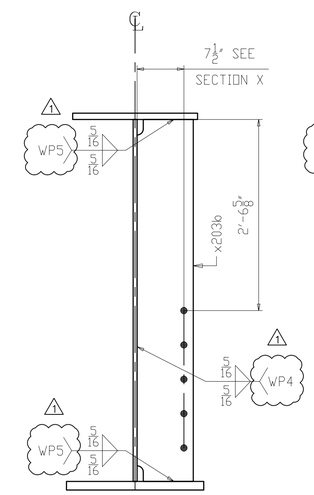

SECTION B

(REAR ABUTMENT K-FRAME)

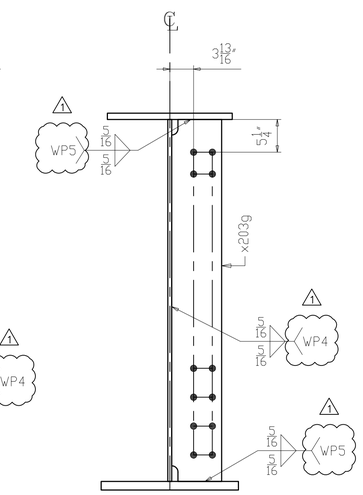

SECTION C

(INTERMEDIATE K-FRAME)

NO.	DATE	REMARKS	BY
1	10/10/19	AS PER APPROVAL COMMENTS / WP # ADDED	DP

REVISIONS

Veritas STEEL
2-EAU CLAIRE, WI 3-WAUSAU, WI 4-PALATKA, FL
IAS AC-434 TENGA 1605

STRUCTURE	CUY-010-1976L, OH-10 WESTBOUND OVER GCRTA BLUE AND GREEN LINES
LOCATION	CLEVELAND, OHIO CUYAHOGA COUNTY
PROJECT NO.	17-3000
ENGINEER	MICHAEL BAKER INTERNATIONAL
CONTRACTOR	KOKOSING
ITEM	GIRDER 204D1
SURFACE PREP.	SEE P201 OPEN HOLES 1 1/16"Ø (U.N.O.)
PAINT	SEE P201

APPROVAL	DRAWN AM 06/07/19	SHEET NO.	PLANT	ORDER NO.
SHOP	CHECKED DP 07/10/19	204	3	317023A-20

LINE	SHIP MARK	NO. OF PCS.	ASS'Y MARK	MATERIAL SHAPE	LENGTH FT.	LENGTH IN.	MATERIAL SPEC.	ITEM NO.	REMARKS	
1	205A2	ONE		GIRDER						39910
2		1	205TF	PL 2 1/2 x 28	64	5	A709-50WT2	2013	CVN	15331
3		1	205WB	PL 5/8 x 58	64	6 3/16	A709-50WT2	2017	CVN	7952
4		1	205BF	PL 2 5/8 x 28	64	5	A709-50WT2	2021	CVN	16098
5		1	x203d	PL 1 1/8 x 9	4	10	A709-50WT2	2057	CVN MIE	166
6		1	x203f	PL 1 1/8 x 9	4	10	A709-50WT2	2057	CVN MIE	166
7		3	x203g	PL 1/2 x 8	4	10	A709-50WT2	2058	CVN	197

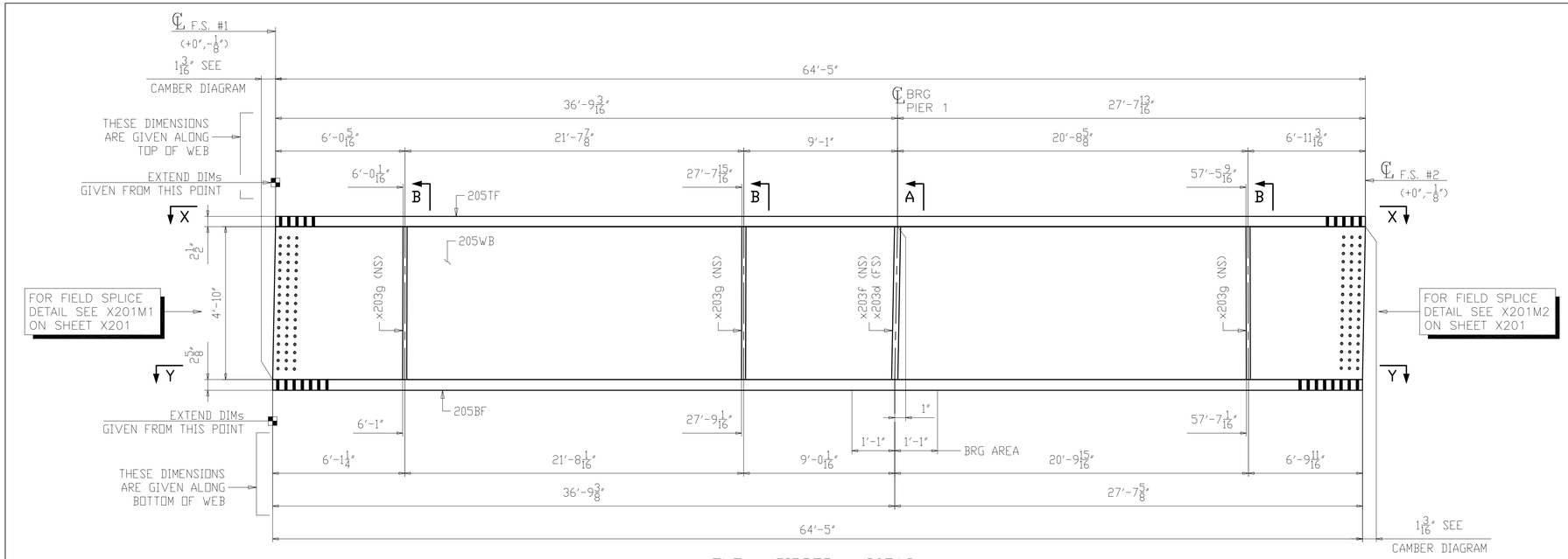

ONE ~ GIRDER ~ 205A2

1. FOR GENERAL NOTES SEE SHEET GN201.
2. FOR CAMBER AND FLANGE DIAGRAM SEE SHEET BG205.
3. FOR HORIZONTAL CURVING DIAGRAMS SEE SHEET HC202.
4. FOR GIRDER STANDARD DETAILS SEE SHEET x203.
5. FOR FIELD SPLICE DETAILS SEE x201.
6. T2 - DENOTES MATERIAL SUBJECT TO CHARPY V-NOTCH TESTING (ZONE 2).
7. ALL MATERIAL A709-50WT2 (UN).
8. BRG AREA - DENOTES AREA TO BE FLAT AND TRUE TO RECEIVE SOLE PLATE.

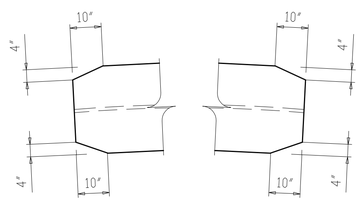

SECTION X-X

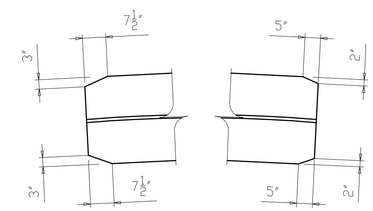

SECTION Y-Y

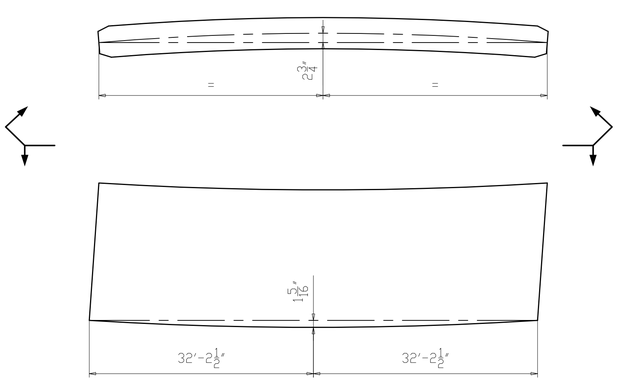

CAMBER & CURVE DIAGRAM

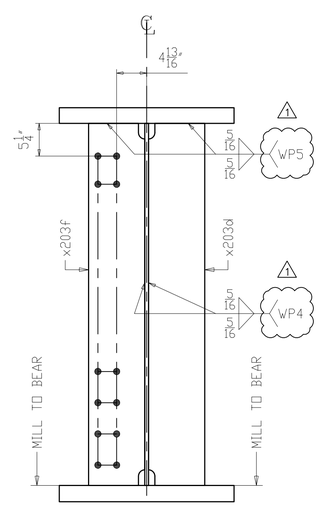

SECTION A
(K-FRAME PIER 1)

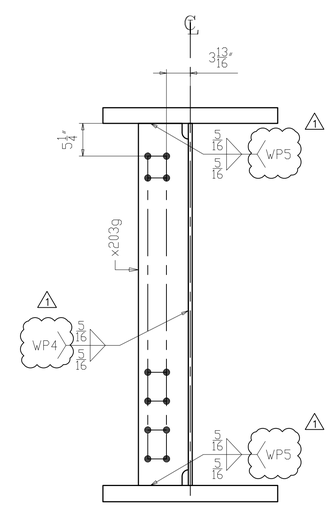

SECTION B
(INTERMEDIATE K-FRAME)

NO.	DATE	REMARKS	BY
1	10/10/19	WELD PROCEDURE # ADDED	DP

REVISIONS

Veritas STEEL
2-EAU CLAIRE, WI 3-WAUSAU, WI 4-PALATKA, FL
TENCA 1605

STRUCTURE: CUY-010-1976L, OH-10 WESTBOUND OVER GCRTA BLUE AND GREEN LINES
LOCATION: CLEVELAND, OHIO CUYAHOGA COUNTY
PROJECT NO.: 17-3000
ENGINEER: MICHAEL BAKER INTERNATIONAL
CONTRACTOR: KOKOSING

ITEM: GIRDER 205A2
SURFACE PREP.: SEE P201 OPEN HOLES: 1 1/16"Ø (U.N.O.)
PAINT: SEE P201

APPROVAL	DRAWN AM 06/07/19	SHEET NO.	PLANT	ORDER NO.
SHOP	CHECKED DP 07/10/19	205	3	317023A-20

LINE	SHIP MARK	NO. OF PCS.	ASS'Y MARK	MATERIAL SHAPE	LENGTH FT.	LENGTH IN.	MATERIAL SPEC.	ITEM NO.	REMARKS
1	206B2	ONE		GIRDER					42351
2		1	206TF	PL 2 1/2 x 28	68	1 1/16	A709-50WT2	2014	CVN 16205
3		1	206WB	PL 5/8 x 58	68	2 1/4	A709-50WT2	2018	CVN 8404
4		1	206BF	PL 2 5/8 x 28	68	1 1/16	A709-50WT2	2022	CVN 17015
5		2	x203f	PL 1 1/8 x 9	4	10	A709-50WT2	2057	CVN MIE 333
6		6	x203g	PL 1/2 x 8	4	10	A709-50WT2	2058	CVN 394

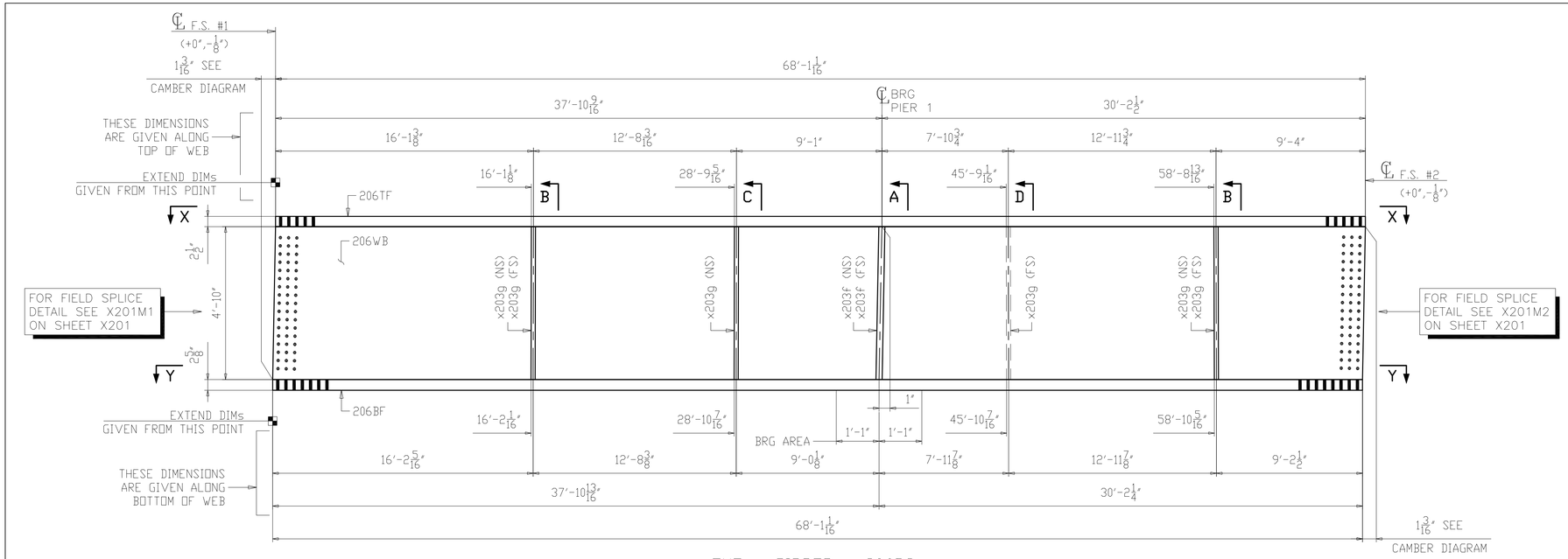

ONE ~ GIRDER ~ 206B2

1. FOR GENERAL NOTES SEE SHEET GN201.
2. FOR CAMBER AND FLANGE DIAGRAM SEE SHEET BG206.
3. FOR HORIZONTAL CURVING DIAGRAMS SEE SHEET HC202.
4. FOR GIRDER STANDARD DETAILS SEE SHEET x203.
5. FOR FIELD SPLICE DETAILS SEE x201.
6. T2 - DENOTES MATERIAL SUBJECT TO CHARPY V-NOTCH TESTING (ZONE 2).
7. ALL MATERIAL A709-50WT2 (UN).
8. BRG AREA - DENOTES AREA TO BE FLAT AND TRUE TO RECEIVE SOLE PLATE.

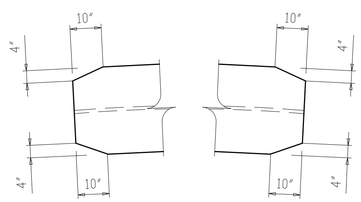

SECTION X-X

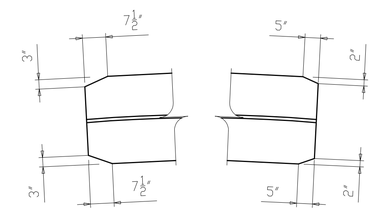

SECTION Y-Y

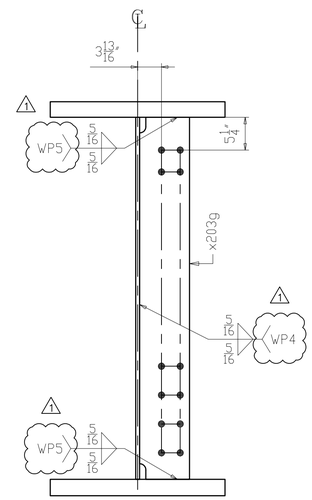

SECTION D
(INTERMEDIATE K-FRAME)

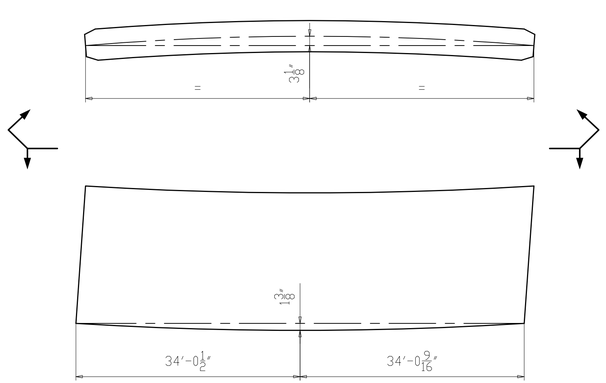

CAMBER & CURVE DIAGRAM

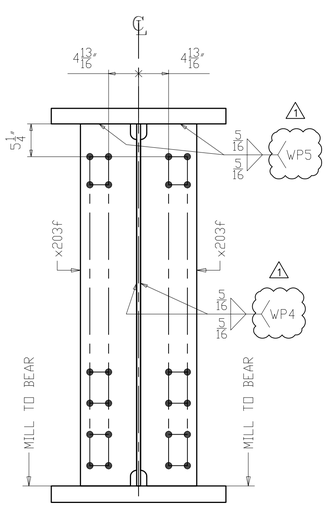

SECTION A
(K-FRAME PIER 1)

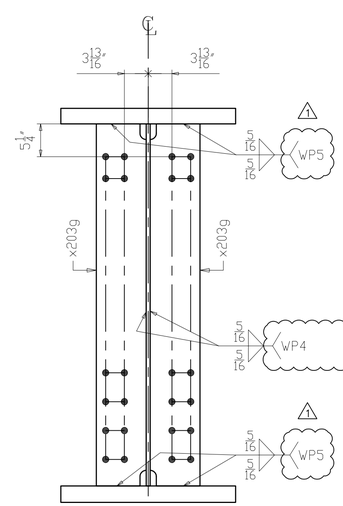

SECTION B
(INTERMEDIATE K-FRAME)

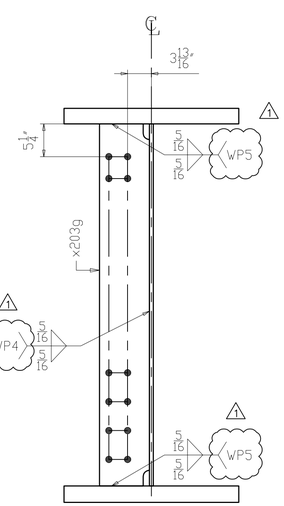

SECTION C
(INTERMEDIATE K-FRAME)

NO.	DATE	REMARKS	BY
1	10/10/19	WELD PROCEDURE # ADDED	DP

REVISIONS

Veritas STEEL
2-EAU CLAIRE, WI 3-WAUSAU, WI 4-PALATKA, FL
IENCA 1605

STRUCTURE	CUY-010-1976L, OH-10 WESTBOUND OVER GCRTA BLUE AND GREEN LINES
LOCATION	CLEVELAND, OHIO CUYAHOGA COUNTY
PROJECT NO.	17-3000
ENGINEER	MICHAEL BAKER INTERNATIONAL
CONTRACTOR	KOKOSING
ITEM	GIRDER 206B2
SURFACE PREP.	SEE P201
OPEN HOLES	1 1/16"Ø (U.N.O.)
PAINT	SEE P201

APPROVAL	DRAWN AM 06/07/19	SHEET NO.	PLANT	ORDER NO.
SHOP	CHECKED DP 07/10/19	206	3	317023A-20

LINE	SHIP MARK	NO. OF PCS.	ASS'Y MARK	MATERIAL SHAPE	LENGTH FT.	LENGTH IN.	MATERIAL SPEC.	ITEM NO.	REMARKS
1	207C2	ONE		GIRDER					48151
2		1	207TF	PL 2 1/2 x 28	77	1 3/4	A709-50WT2	2015	CVN 18361
3		1	207WB	PL 5/8 x 58	77	3	A709-50WT2	2019	CVN 9521
4		1	207BF	PL 2 5/8 x 28	77	1 3/4	A709-50WT2	2023	CVN 19279
5		2	x203F	PL 1 1/8 x 9	4	10	A709-50WT2	2057	CVN MIE 333
6		10	x203g	PL 1/2 x 8	4	10	A709-50WT2	2058	CVN 657

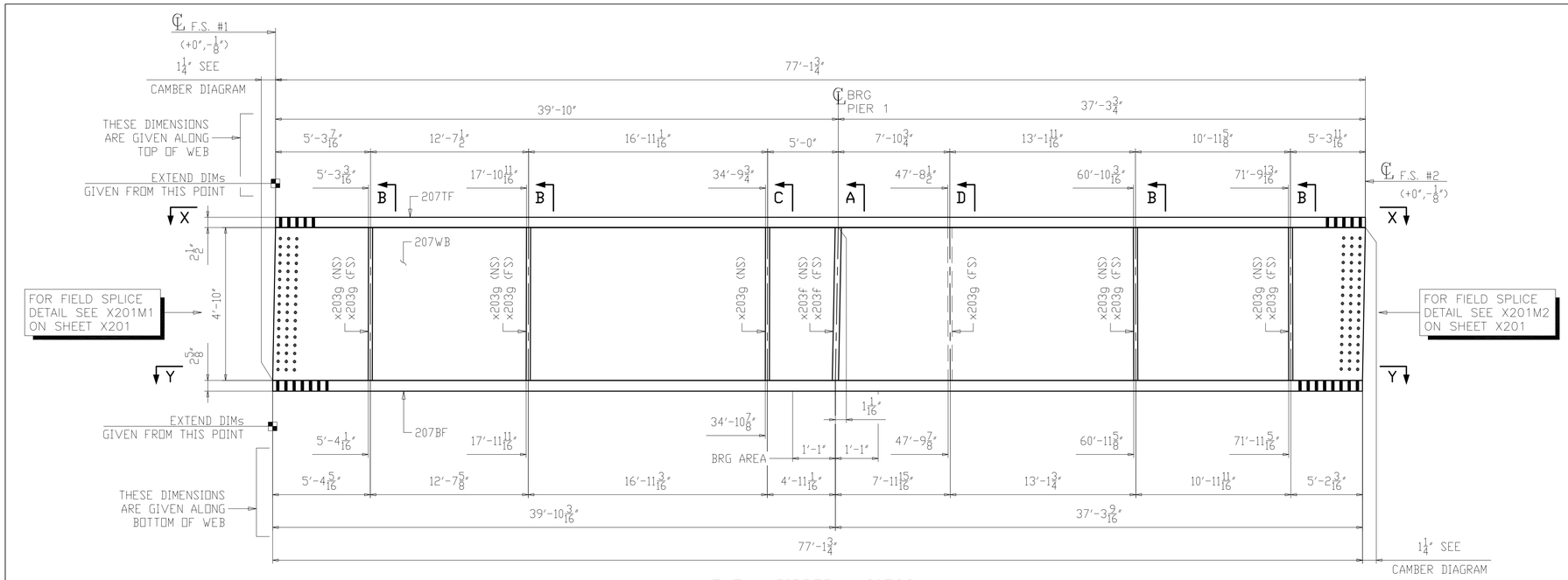

ONE ~ GIRDER ~ 207C2

1. FOR GENERAL NOTES SEE SHEET GN201.
2. FOR CAMBER AND FLANGE DIAGRAM SEE SHEET BG207.
3. FOR HORIZONTAL CURVING DIAGRAMS SEE SHEET HC202.
4. FOR GIRDER STANDARD DETAILS SEE SHEET x203.
5. FOR FIELD SPLICE DETAILS SEE x201.
6. T2 - DENOTES MATERIAL SUBJECT TO CHARPY V-NOTCH TESTING (ZONE 2).
7. ALL MATERIAL A709-50WT2 (UN).
8. BRG AREA - DENOTES AREA TO BE FLAT AND TRUE TO RECEIVE SOLE PLATE.

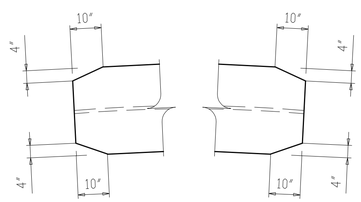

SECTION X-X

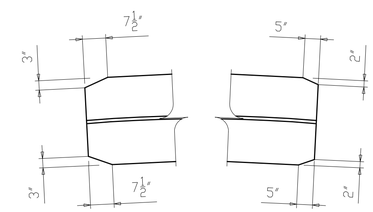

SECTION Y-Y

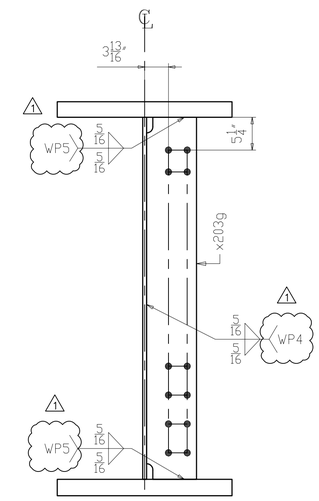

SECTION D
(INTERMEDIATE K-FRAME)

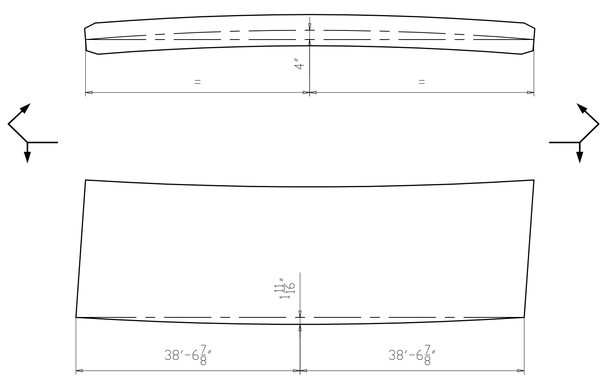

CAMBER & CURVE DIAGRAM

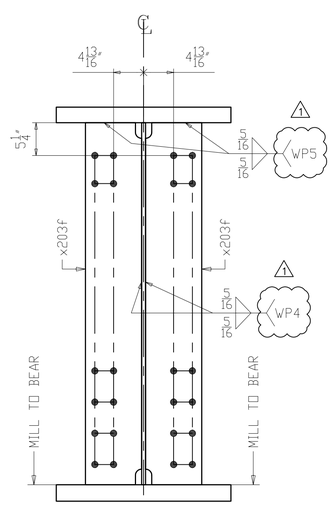

SECTION A
(K-FRAME PIER 1)

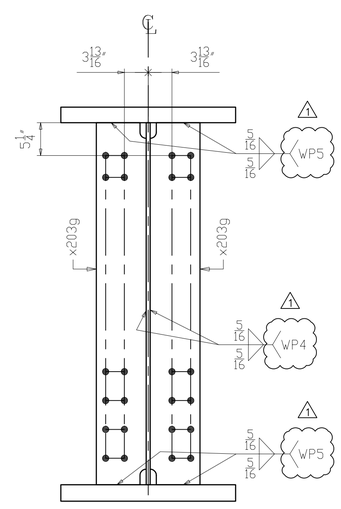

SECTION B
(INTERMEDIATE K-FRAME)

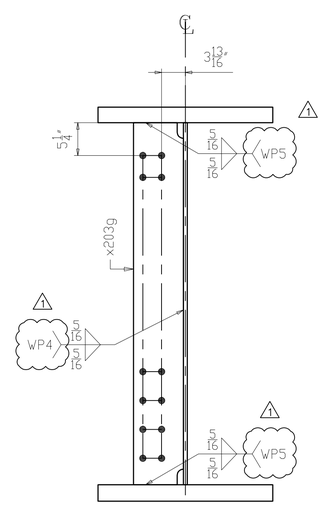

SECTION C
(INTERMEDIATE K-FRAME)

NO.	DATE	REMARKS	BY
1	10/10/19	WELD PROCEDURE # ADDED	DP

REVISIONS

Veritas STEEL
2-EAU CLAIRE, WI 3-WAUSAU, WI 4-PALATKA, FL
IAS 1605

STRUCTURE	CUY-010-1976L, OH-10 WESTBOUND OVER GCRTA BLUE AND GREEN LINES
LOCATION	CLEVELAND, OHIO CUYAHOGA COUNTY
PROJECT NO.	17-3000
ENGINEER	MICHAEL BAKER INTERNATIONAL
CONTRACTOR	KOKOSING
ITEM	GIRDER 207C2
SURFACE PREP.	SEE P201 OPEN HOLES 1 1/16"Ø (U.N.O.)
PAINT	SEE P201

APPROVAL	DRAWN AM 06/07/19	SHEET NO.	PLANT	ORDER NO.
SHOP	CHECKED DP 07/10/19	207	3	317023A-20

LINE	SHIP MARK	NO. OF PCS.	ASS'Y MARK	MATERIAL SHAPE	LENGTH FT.	LENGTH IN.	MATERIAL SPEC.	ITEM NO.	REMARKS
1	208D2	ONE		GIRDER					45033
2		1	208TF	PL 2 1/2 x 28	72	7	A709-50WT2	2016	CVN 17275
3		1	208WB	PL 5/8 x 58	72	8 3/16	A709-50WT2	2020	CVN 8958
4		1	208BF	PL 2 5/8 x 28	72	7	A709-50WT2	2024	CVN 18139
5		1	x203d	PL 1 1/8 x 9	4	10	A709-50WT2	2057	CVN MIE 166
6		1	x203f	PL 1 1/8 x 9	4	10	A709-50WT2	2057	CVN MIE 166
7		5	x203g	PL 1/2 x 8	4	10	A709-50WT2	2058	CVN 329

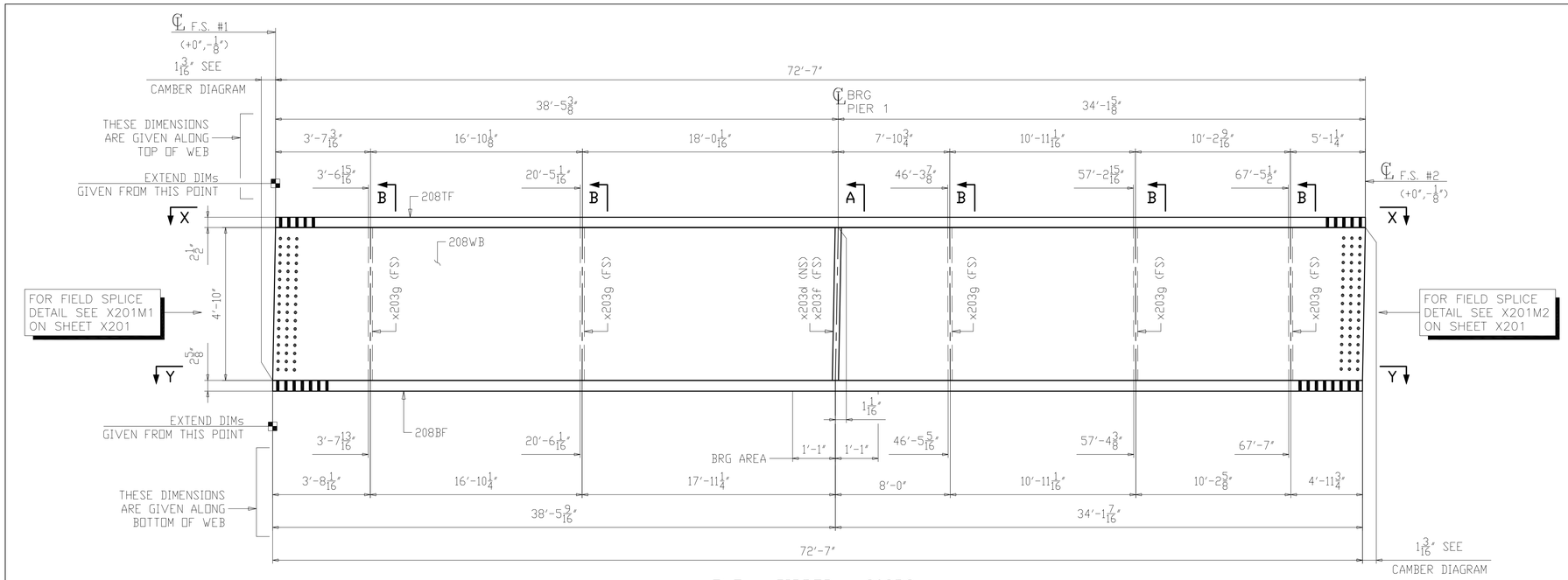

ONE ~ GIRDER ~ 208D2

1. FOR GENERAL NOTES SEE SHEET GN201.
2. FOR CAMBER AND FLANGE DIAGRAM SEE SHEET BG208.
3. FOR HORIZONTAL CURVING DIAGRAMS SEE SHEET HC202.
4. FOR GIRDER STANDARD DETAILS SEE SHEET x203.
5. FOR FIELD SPLICE DETAILS SEE x201.
6. T2 - DENOTES MATERIAL SUBJECT TO CHARPY V-NOTCH TESTING (ZONE 2).
7. ALL MATERIAL A709-50WT2 (UN).
8. BRG AREA - DENOTES AREA TO BE FLAT AND TRUE TO RECEIVE SOLE PLATE.

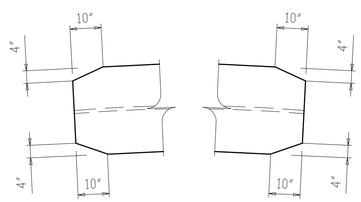

SECTION X-X

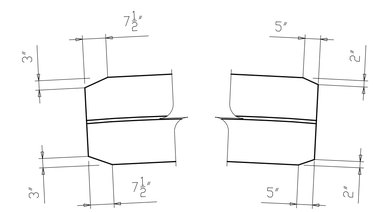

SECTION Y-Y

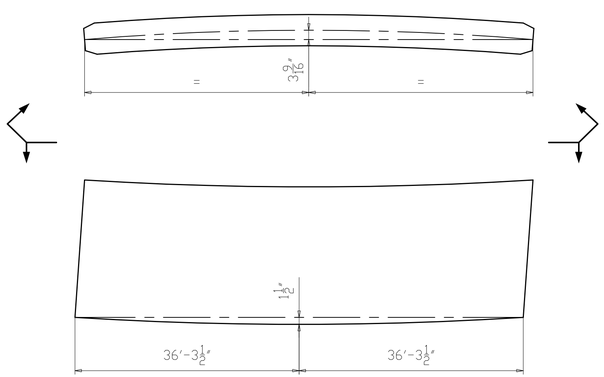

CAMBER & CURVE DIAGRAM

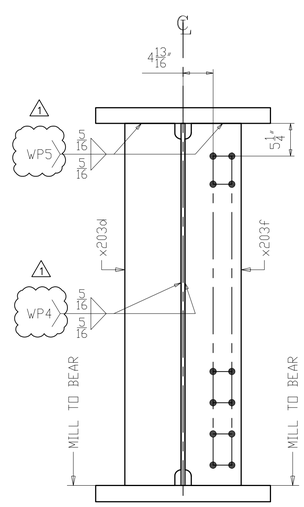

SECTION A
(K-FRAME PIER 1)

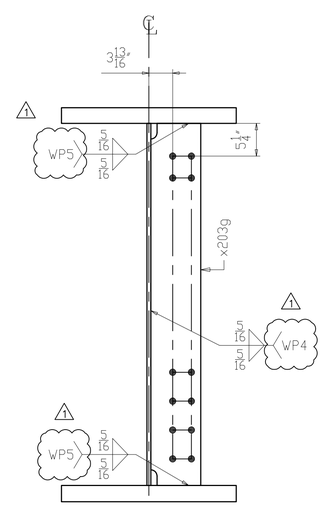

SECTION B
(INTERMEDIATE K-FRAME)

NO.	DATE	REMARKS	BY
1	10/10/19	WELD PROCEDURE # ADDED	DP

REVISIONS

Veritas STEEL
2-EAU CLAIRE, WI 3-WAUSAU, WI 4-PALATKA, FL
IAS AC 1605

STRUCTURE	CUY-010-1976L, OH-10 WESTBOUND OVER GCRTA BLUE AND GREEN LINES
LOCATION	CLEVELAND, OHIO CUYAHOGA COUNTY
PROJECT NO.	17-3000
ENGINEER	MICHAEL BAKER INTERNATIONAL
CONTRACTOR	KOKOSING
ITEM	GIRDER 208D2
SURFACE PREP.	SEE P201
OPEN HOLES	1 1/16"Ø (U.N.O.)
PAINT	SEE P201

APPROVAL	DRAWN AM 06/07/19	SHEET NO.	PLANT	ORDER NO.
SHOP	CHECKED DP 07/10/19	208	3	317023A-20

LINE	SHIP MARK	NO. OF PCS.	ASS'Y MARK	MATERIAL SHAPE	LENGTH FT.	LENGTH IN.	MATERIAL SPEC.	ITEM NO.	REMARKS	
1	209A3	ONE		GIRDER						41906
2		1	209TF1	PL 1 x 20	84	11 11/16	A709-50WT2	2025	CVN	5778
3		1	209TF2	PL 1 x 20	46	11 1/16	A709-50WT2	2131	CVN	3191
4		1	209WB1	PL 5/8 x 58	48	11 3/4	A709-50WT2	2135	CVN	6037
5		1	209WB2	PL 5/8 x 58	83	0	A709-50WT2	2029	CVN	10230
6		1	209BF1	PL 1 1/2 x 24	84	11 5/8	A709-50WT2	2033	CVN	10400
7		1	209BF2	PL 1 1/2 x 24	46	11 1/8	A709-50WT2	2139	CVN	5744
8		8	x203g	PL 1/2 x 8	4	10	A709-50WT2	2058	CVN	526

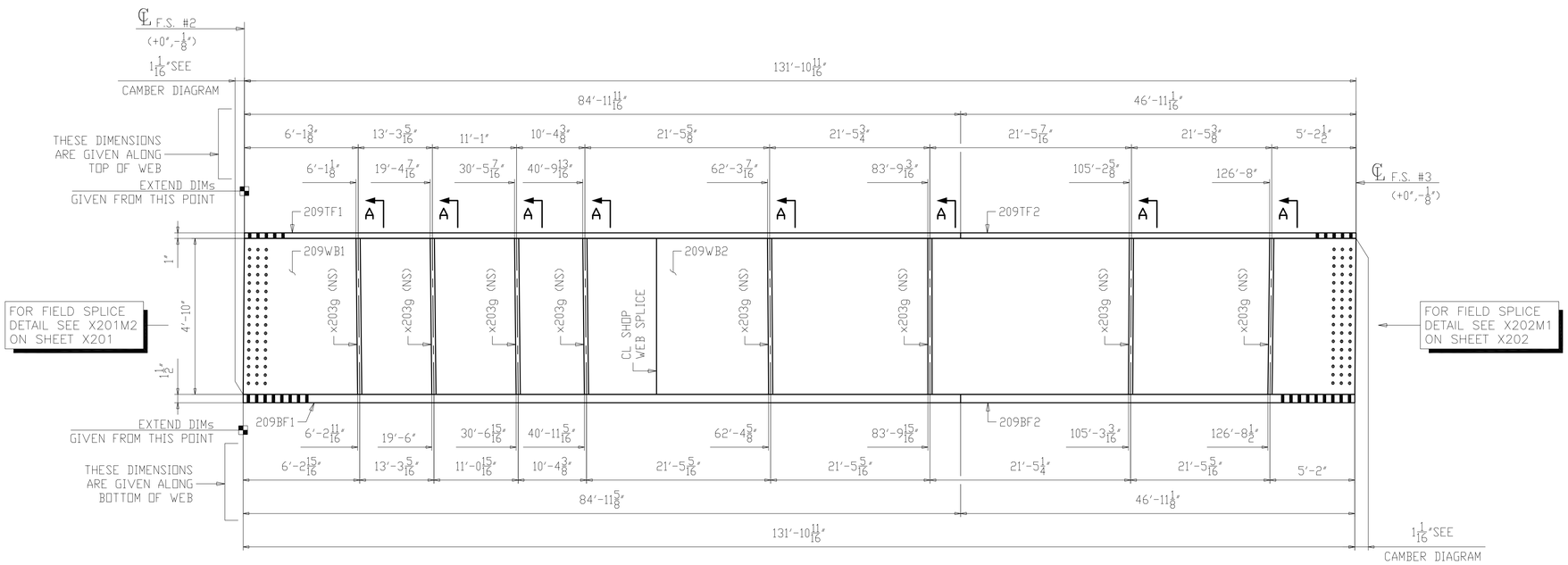

ONE ~ GIRDER ~ 209A3

1. FOR GENERAL NOTES SEE SHEET GN201.
2. FOR CAMBER AND FLANGE DIAGRAM SEE SHEET BG209.
3. FOR HORIZONTAL CURVING DIAGRAMS SEE SHEET HC203.
4. FOR GIRDER STANDARD DETAILS SEE SHEET x203.
5. FOR FIELD SPLICE DETAILS SEE x201 & x202.
6. T2 - DENOTES MATERIAL SUBJECT TO CHARPY V-NOTCH TESTING (ZONE 2).
7. ALL MATERIAL A709-50WT2 (UN).

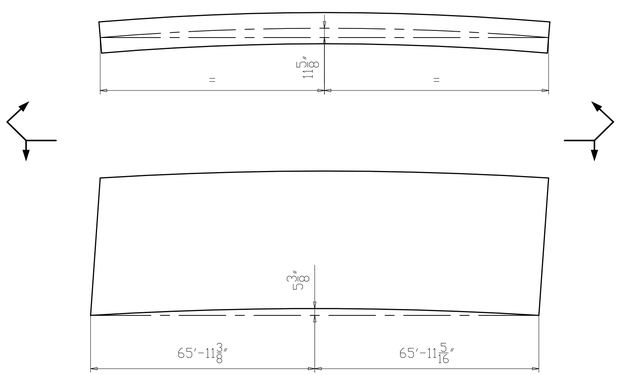

CAMBER & CURVE DIAGRAM

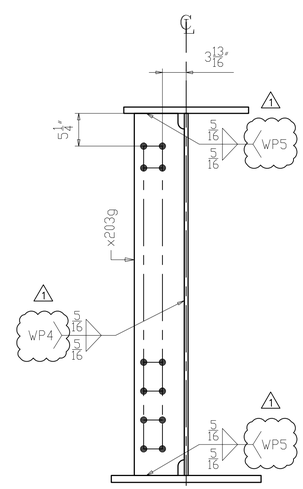

SECTION A
(INTERMEDIATE K-FRAME)

NO.	DATE	REMARKS	BY
1	10/10/19	WELD PROCEDURE # ADDED	DP

REVISIONS

Veritas STEEL
2-EAU CLAIRE, WI 3-WAUSAU, WI 4-PALATKA, FL
TENCA 1605

STRUCTURE: CUY-010-1976L, OH-10 WESTBOUND OVER GCRTA BLUE AND GREEN LINES
LOCATION: CLEVELAND, OHIO CUYAHOGA COUNTY
PROJECT NO.: 17-3000
ENGINEER: MICHAEL BAKER INTERNATIONAL
CONTRACTOR: KOKOSING

ITEM: GIRDER 209A3
SURFACE PREP.: SEE P201 OPEN HOLES: 1 1/16"Ø (U.N.O.)
PAINT: SEE P201

APPROVAL	DRAWN AM 06/07/19	SHEET NO.	PLANT	ORDER NO.
SHOP	CHECKED DP 07/10/19	209	3	317023A-20

LINE	SHIP MARK	NO. OF PCS.	ASS'Y MARK	MATERIAL SHAPE	LENGTH FT.	LENGTH IN.	MATERIAL SPEC.	ITEM NO.	REMARKS	
1	210B3	ONE		GIRDER						40683
2		1	210TF1	PL 1 x 20	41	9 3/16	A709-50WT2	2132	CVN	2840
3		1	210TF2	PL 1 x 20	84	11 11/16	A709-50WT2	2026	CVN	5778
4		1	210WB1	PL 5/8 x 58	83	0	A709-50WT2	2030	CVN	10230
5		1	210WB2	PL 5/8 x 58	43	9 15/16	A709-50WT2	2136	CVN	5402
6		1	210BF1	PL 1 1/2 x 24	41	9 5/16	A709-50WT2	2140	CVN	5113
7		1	210BF2	PL 1 1/2 x 24	84	11 9/16	A709-50WT2	2034	CVN	10400
8		14	x203g	PL 1/2 x 8	4	10	A709-50WT2	2058	CVN	920

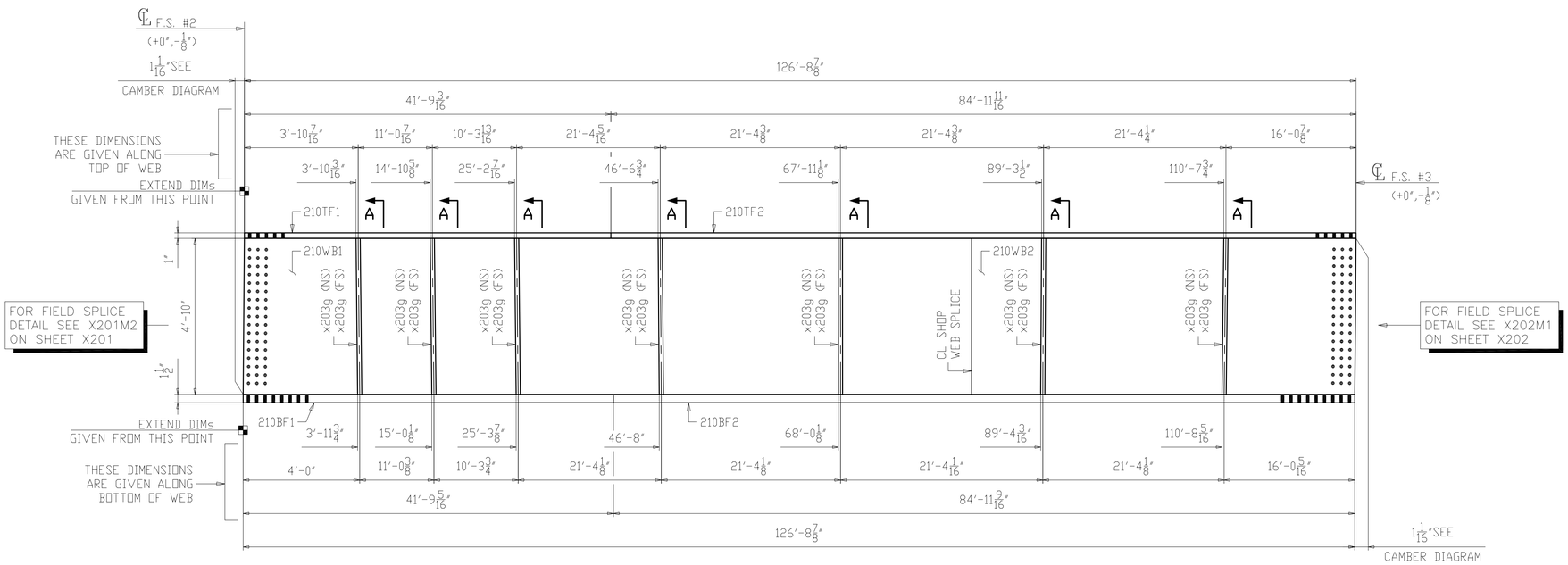

ONE ~ GIRDER ~ 210B3

1. FOR GENERAL NOTES SEE SHEET GN201.
2. FOR CAMBER AND FLANGE DIAGRAM SEE SHEET BG210.
3. FOR HORIZONTAL CURVING DIAGRAMS SEE SHEET HC203.
4. FOR GIRDER STANDARD DETAILS SEE SHEET x203.
5. FOR FIELD SPLICE DETAILS SEE x201 & x202.
6. T2 - DENOTES MATERIAL SUBJECT TO CHARPY V-NOTCH TESTING (ZONE 2).
7. ALL MATERIAL A709-50WT2 (UN).

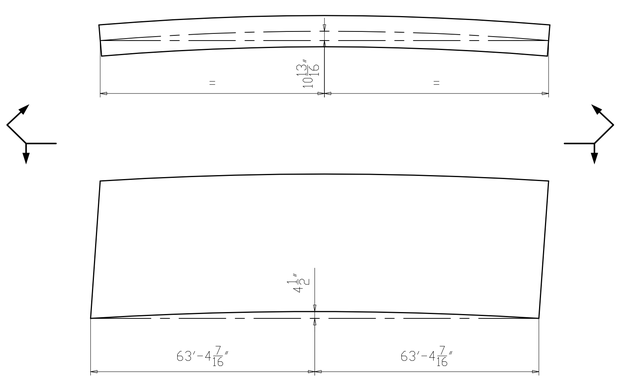

CAMBER & CURVE DIAGRAM

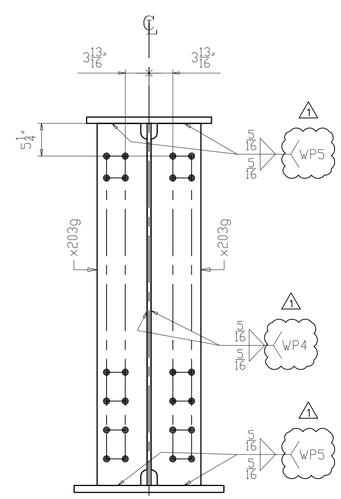

SECTION A
(INTERMEDIATE K-FRAME)

NO.	DATE	REMARKS	BY
1	10/10/19	WELD PROCEDURE # ADDED	DP

REVISIONS

Veritas STEEL
2-EAU CLAIRE, WI 3-WAUSAU, WI 4-PALATKA, FL
TENCA 1605

STRUCTURE: CUY-010-1976L, OH-10 WESTBOUND OVER GCRTA BLUE AND GREEN LINES
LOCATION: CLEVELAND, OHIO CUYAHOGA COUNTY
PROJECT NO.: 17-3000
ENGINEER: MICHAEL BAKER INTERNATIONAL
CONTRACTOR: KOKOSING

ITEM: GIRDER 210B3
SURFACE PREP.: SEE P201 OPEN HOLES: 1 1/16"Ø (U.N.O.)
PAINT: SEE P201

APPROVAL	DRAWN AM 06/07/19	SHEET NO.	PLANT	ORDER NO.
SHOP	CHECKED DP 07/10/19	210	3	317023A-20

LINE	SHIP MARK	NO. OF PCS.	ASS'Y MARK	MATERIAL SHAPE	LENGTH FT.	LENGTH IN.	MATERIAL SPEC.	ITEM NO.	REMARKS	
1	211C3	ONE		GIRDER						36961
2		1	211TF1	PL 1 x 20	30	3 13/16	A709-50WT2	2133	CVN	2062
3		1	211TF2	PL 1 x 20	84	11 11/16	A709-50WT2	2027	CVN	5778
4		1	211WB1	PL 5/8 x 58	83	0	A709-50WT2	2031	CVN	10230
5		1	211WB2	PL 5/8 x 58	32	4 7/16	A709-50WT2	2137	CVN	3990
6		1	211BF1	PL 1 1/2 x 24	30	3 7/8	A709-50WT2	2141	CVN	3712
7		1	211BF2	PL 1 1/2 x 24	84	11 5/8	A709-50WT2	2035	CVN	10400
8		12	x203g	PL 1/2 x 8	4	10	A709-50WT2	2058	CVN	789

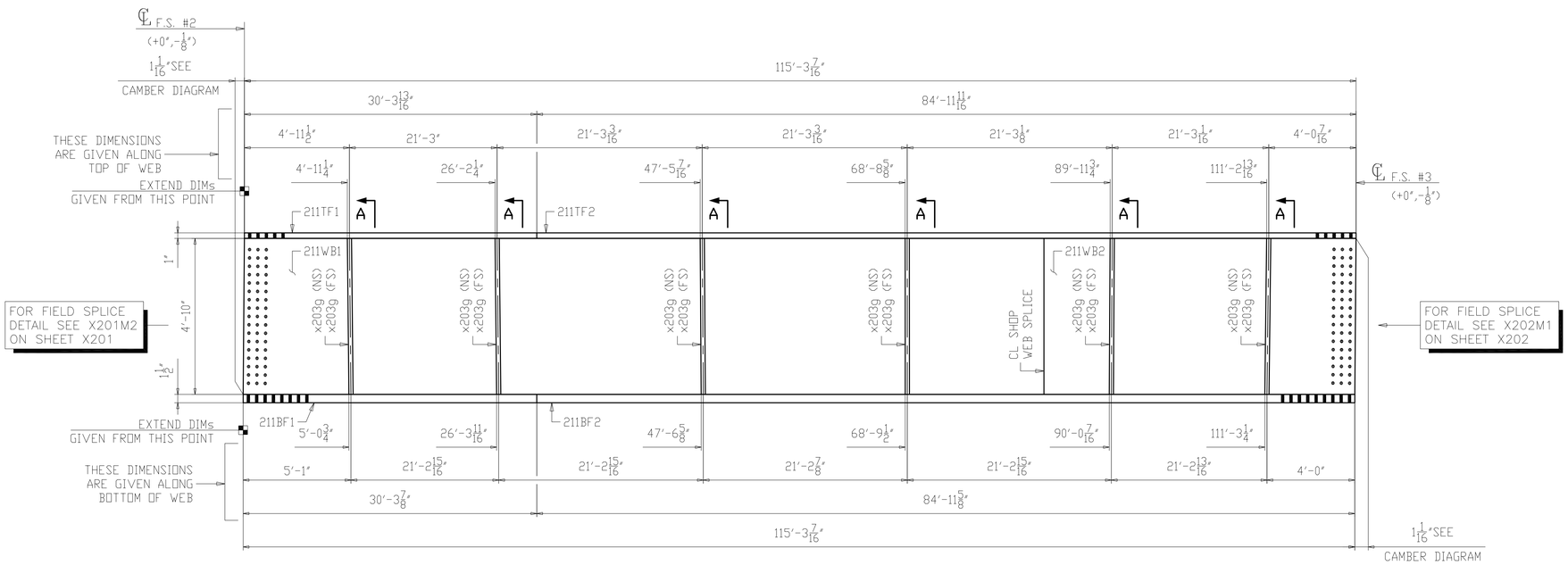

ONE ~ GIRDER ~ 211C3

1. FOR GENERAL NOTES SEE SHEET GN201.
2. FOR CAMBER AND FLANGE DIAGRAM SEE SHEET BG211.
3. FOR HORIZONTAL CURVING DIAGRAMS SEE SHEET HC203.
4. FOR GIRDER STANDARD DETAILS SEE SHEET x203.
5. FOR FIELD SPLICE DETAILS SEE x201 & x202.
6. T2 - DENOTES MATERIAL SUBJECT TO CHARPY V-NOTCH TESTING (ZONE 2).
7. ALL MATERIAL A709-50WT2 (UN).

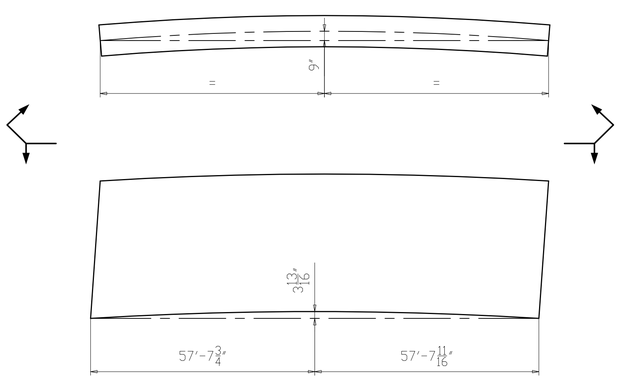

CAMBER & CURVE DIAGRAM

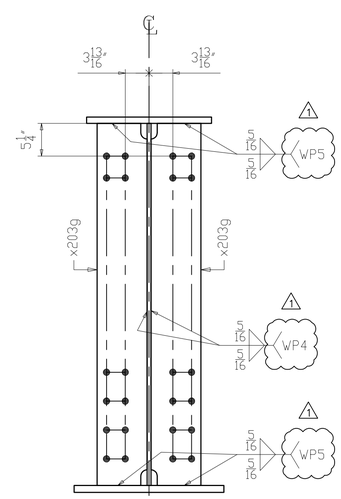

SECTION A
(INTERMEDIATE K-FRAME)

NO.	DATE	REMARKS	BY
1	10/10/19	WELD PROCEDURE # ADDED	DP

REVISIONS

Veritas STEEL
2-EAU CLAIRE, WI 3-WAUSAU, WI 4-PALATKA, FL
TENCA 1605

STRUCTURE: CUY-010-1976L, OH-10 WESTBOUND OVER GCRTA BLUE AND GREEN LINES
LOCATION: CLEVELAND, OHIO CUYAHOGA COUNTY
PROJECT NO. 17-3000
ENGINEER: MICHAEL BAKER INTERNATIONAL
CONTRACTOR: KOKOSING

ITEM: GIRDER 211C3
SURFACE PREP.: SEE P201 OPEN HOLES: 1 1/16"Ø (U.N.O.)
PAINT: SEE P201

APPROVAL	DRAWN AM 06/07/19	SHEET NO.	PLANT	ORDER NO.
SHOP	CHECKED DP 07/10/19	211	3	317023A-20

LINE	SHIP MARK	NO. OF PCS.	ASS'Y MARK	MATERIAL SHAPE	LENGTH FT.	LENGTH IN.	MATERIAL SPEC.	ITEM NO.	REMARKS	
1	212D3	ONE		GIRDER						37504
2		1	212TF1	PL 1 x 20	33	3 3/4	A709-50WT2	2134	CVN	2265
3		1	212TF2	PL 1 x 20	84	11 11/16	A709-50WT2	2028	CVN	5778
4		1	212WB1	PL 5/8 x 58	83	0	A709-50WT2	2032	CVN	10230
5		1	212WB2	PL 5/8 x 58	35	4 3/8	A709-50WT2	2138	CVN	4359
6		1	212BF1	PL 1 1/2 x 24	33	3 13/16	A709-50WT2	2142	CVN	4078
7		1	212BF2	PL 1 1/2 x 24	84	11 5/8	A709-50WT2	2036	CVN	10400
8		6	x203g	PL 1/2 x 8	4	10	A709-50WT2	2058	CVN	394

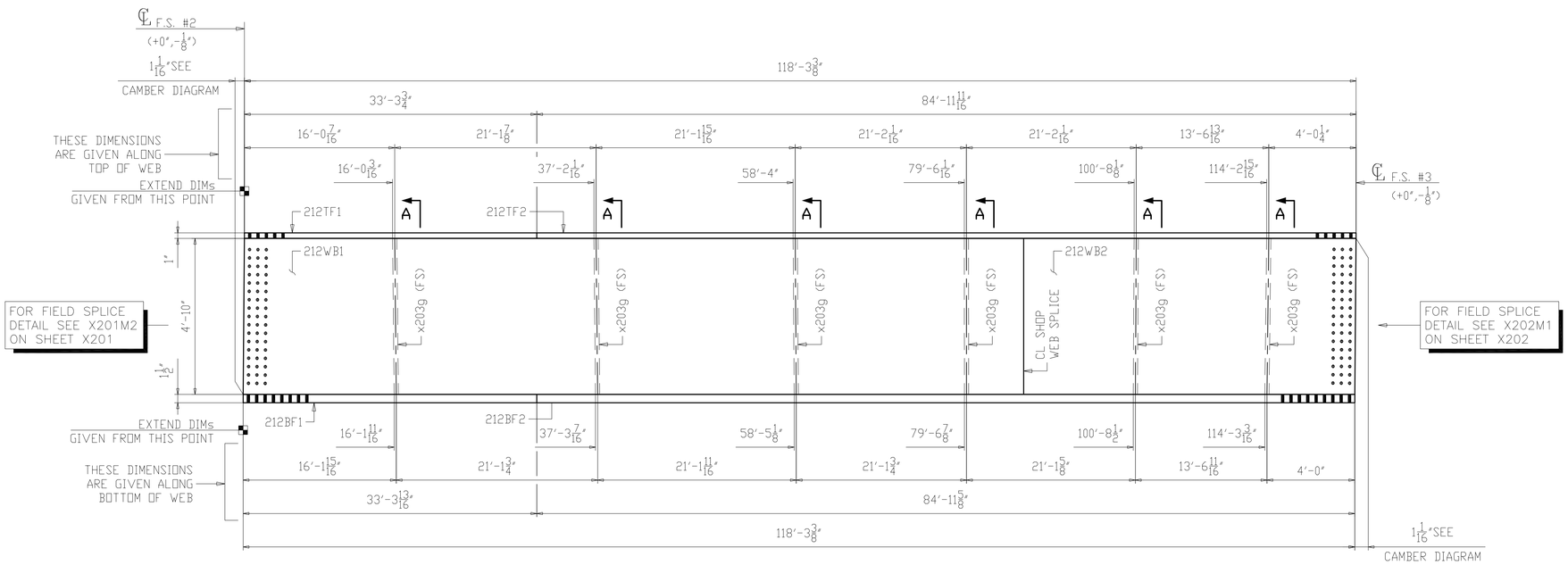

ONE ~ GIRDER ~ 212D3

1. FOR GENERAL NOTES SEE SHEET GN201.
2. FOR CAMBER AND FLANGE DIAGRAM SEE SHEET BG212.
3. FOR HORIZONTAL CURVING DIAGRAMS SEE SHEET HC203.
4. FOR GIRDER STANDARD DETAILS SEE SHEET x203.
5. FOR FIELD SPLICE DETAILS SEE x201 & x202.
6. T2 - DENOTES MATERIAL SUBJECT TO CHARPY V-NOTCH TESTING (ZONE 2).
7. ALL MATERIAL A709-50WT2 (UN).

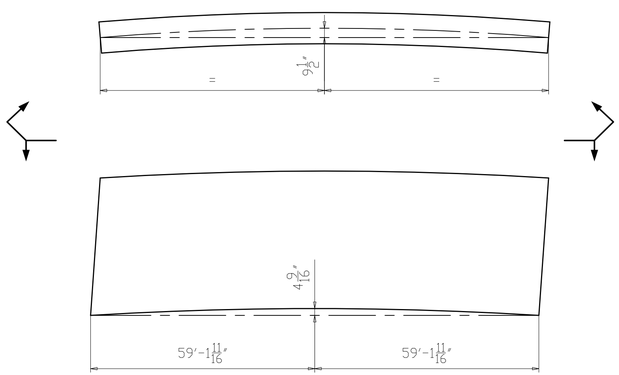

CAMBER & CURVE DIAGRAM

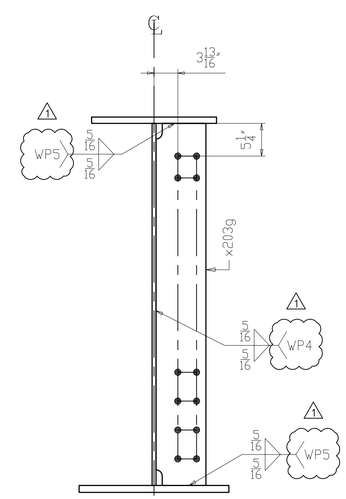

SECTION A
(INTERMEDIATE K-FRAME)

NO.	DATE	REMARKS	BY
1	10/10/19	WELD PROCEDURE # ADDED	DP

REVISIONS

Veritas STEEL
2-EAU CLAIRE, WI 3-WAUSAU, WI 4-PALATKA, FL
TENCA 1605

STRUCTURE: CUY-010-1976L, OH-10 WESTBOUND OVER GCRTA BLUE AND GREEN LINES
LOCATION: CLEVELAND, OHIO CUYAHOGA COUNTY
PROJECT NO.: 17-3000
ENGINEER: MICHAEL BAKER INTERNATIONAL
CONTRACTOR: KOKOSING

ITEM: GIRDER 212D3
SURFACE PREP.: SEE P201 OPEN HOLES: 1 1/16"Ø (U.N.O.)
PAINT: SEE P201

APPROVAL	DRAWN AM 06/07/19	SHEET NO.	PLANT	ORDER NO.
SHOP	CHECKED DP 07/10/19	212	3	317023A-20

LINE	SHIP MARK	NO. OF PCS.	ASS'Y MARK	MATERIAL SHAPE	LENGTH FT.	LENGTH IN.	MATERIAL SPEC.	ITEM NO.	REMARKS	
1	213A4	ONE		GIRDER						33545
2		1	213TF	PL 2 1/2 x 28	55	2 3/8	A709-50WT2	2037	CVN	13137
3		1	213WB	PL 5/8 x 58	55	2 7/8	A709-50WT2	2041	CVN	6808
4		1	213BF	PL 2 1/2 x 28	55	2 3/8	A709-50WT2	2037	CVN	13137
5		1	x203d	PL 1 1/8 x 9	4	10	A709-50WT2	2057	CVN MIE	166
6		1	x203f	PL 1 1/8 x 9	4	10	A709-50WT2	2057	CVN MIE	166
7		2	x203g	PL 1/2 x 8	4	10	A709-50WT2	2058	CVN	131

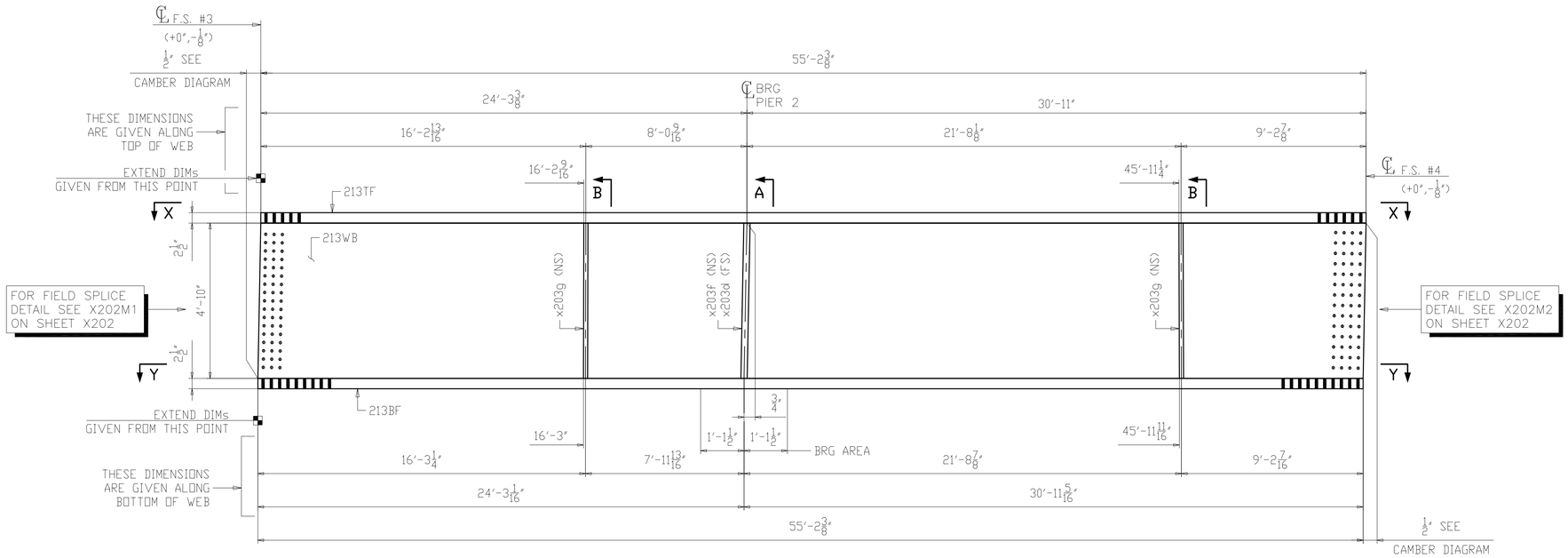

ONE ~ GIRDER ~ 213A4

1. FOR GENERAL NOTES SEE SHEET GN201.
2. FOR CAMBER AND FLANGE DIAGRAM SEE SHEET BG213.
3. FOR HORIZONTAL CURVING DIAGRAMS SEE SHEET HC204.
4. FOR GIRDER STANDARD DETAILS SEE SHEET x203.
5. FOR FIELD SPLICE DETAILS SEE x202.
6. T2 - DENOTES MATERIAL SUBJECT TO CHARPY V-NOTCH TESTING (ZONE 2).
7. ALL MATERIAL A709-50WT2 (UN).
8. BRG AREA - DENOTES AREA TO BE FLAT AND TRUE TO RECEIVE SOLE PLATE.

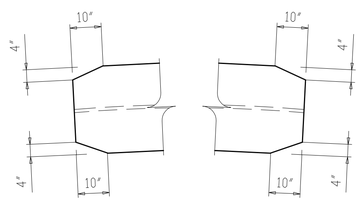

SECTION X-X

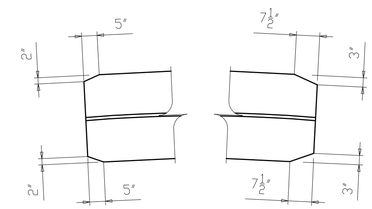

SECTION Y-Y

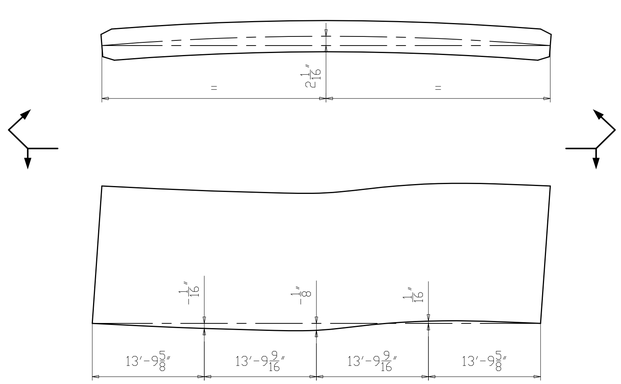

CAMBER & CURVE DIAGRAM

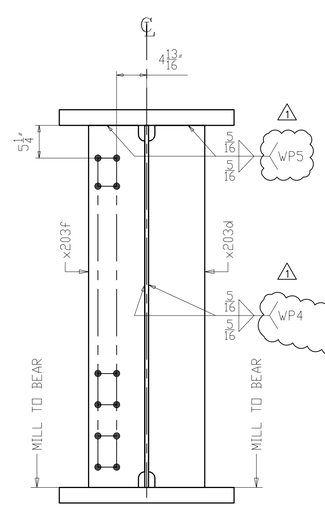

SECTION A
(K-FRAME PIER 2)

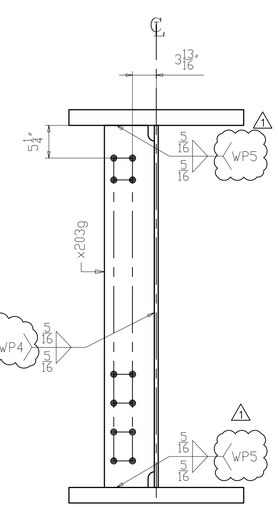

SECTION B
(INTERMEDIATE K-FRAME)

NO.	DATE	REMARKS	BY
1	10/10/19	WELD PROCEDURE # ADDED	DP

REVISIONS

Veritas STEEL
2-EAU CLAIRE, WI 3-WAUSAU, WI 4-PALATKA, FL
TENCA 1605

STRUCTURE	CUY-010-1976L, OH-10 WESTBOUND OVER GCRTA BLUE AND GREEN LINES
LOCATION	CLEVELAND, OHIO CUYAHOGA COUNTY
PROJECT NO.	17-3000
ENGINEER	MICHAEL BAKER INTERNATIONAL
CONTRACTOR	KOKOSING
ITEM	GIRDER 213A4
SURFACE PREP.	SEE P201
OPEN HOLES	1 1/16"Ø (U.N.O.)
PAINT	SEE P201

APPROVAL	DRAWN AM 06/07/19	SHEET NO.	PLANT	ORDER NO.
SHOP	CHECKED DP 07/10/19	213	3	317023A-20

LINE	SHIP MARK	NO. OF PCS.	ASS'Y MARK	MATERIAL SHAPE	LENGTH FT.	LENGTH IN.	MATERIAL SPEC.	ITEM NO.	REMARKS
1	214B4	ONE		GIRDER					37426
2		1	214TF	PL 2 1/2 x 28	61	2 13/16	A709-50WT2	2038	CVN 14574
3		1	214WB	PL 5/8 x 58	61	3 3/16	A709-50WT2	2042	CVN 7551
4		1	214BF	PL 2 1/2 x 28	61	2 13/16	A709-50WT2	2038	CVN 14574
5		2	x203F	PL 1 1/8 x 9	4	10	A709-50WT2	2057	CVN MIE 333
6		6	x203g	PL 1/2 x 8	4	10	A709-50WT2	2058	CVN 394

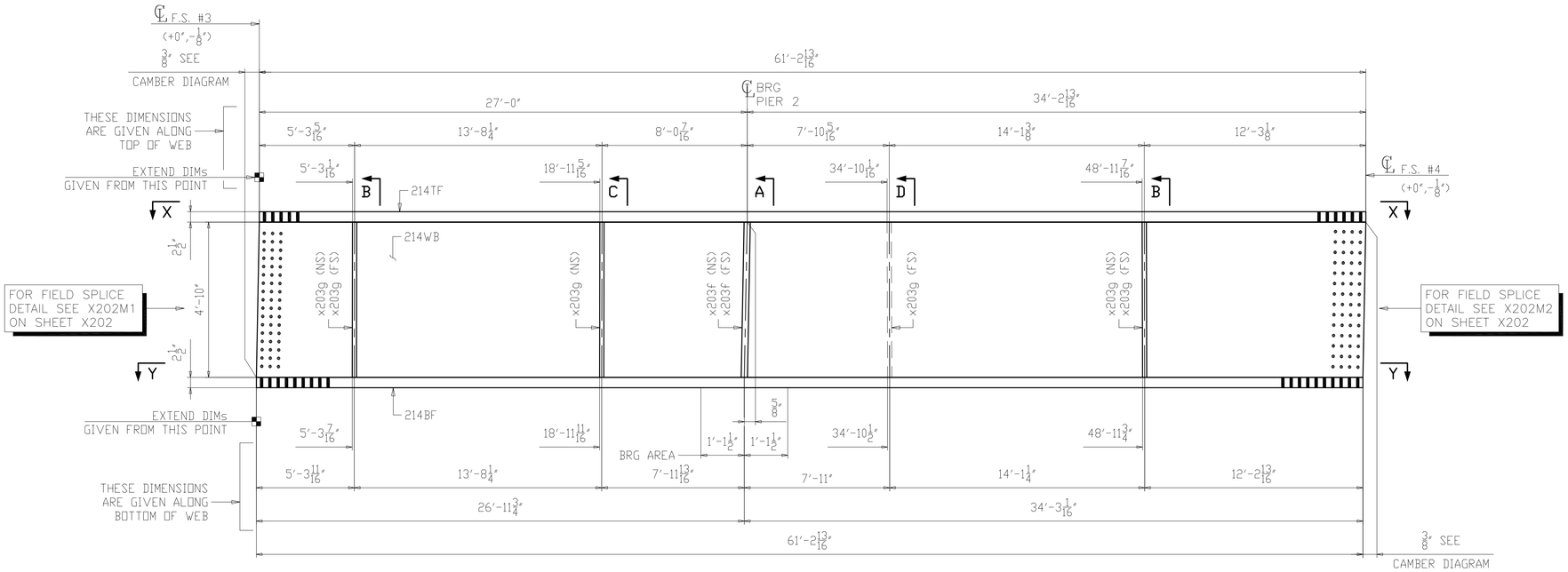

ONE ~ GIRDER ~ 214B4

1. FOR GENERAL NOTES SEE SHEET GN201.
2. FOR CAMBER AND FLANGE DIAGRAM SEE SHEET BG214.
3. FOR HORIZONTAL CURVING DIAGRAMS SEE SHEET HC204.
4. FOR GIRDER STANDARD DETAILS SEE SHEET x203.
5. FOR FIELD SPLICE DETAILS SEE x202.
6. T2 - DENOTES MATERIAL SUBJECT TO CHARPY V-NOTCH TESTING (ZONE 2).
7. ALL MATERIAL A709-50WT2 (UN).
8. BRG AREA - DENOTES AREA TO BE FLAT AND TRUE TO RECEIVE SOLE PLATE.

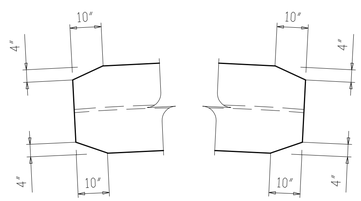

SECTION X-X

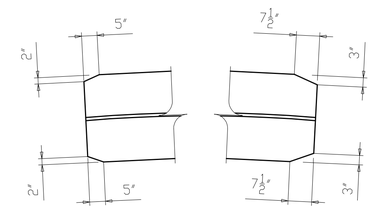

SECTION Y-Y

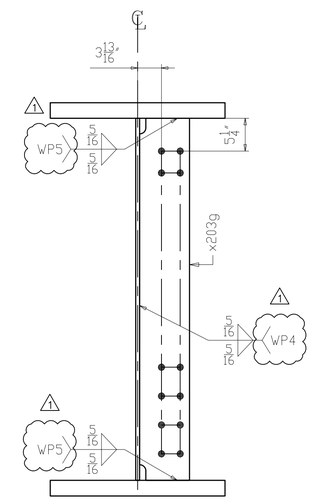

SECTION D
(INTERMEDIATE K-FRAME)

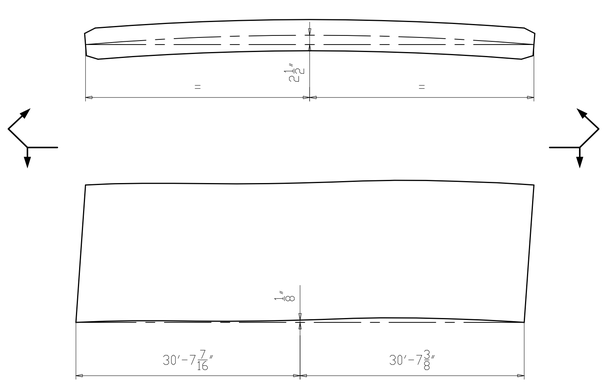

CAMBER & CURVE DIAGRAM

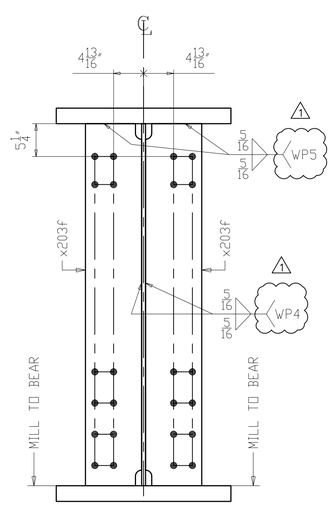

SECTION A
(K-FRAME PIER 2)

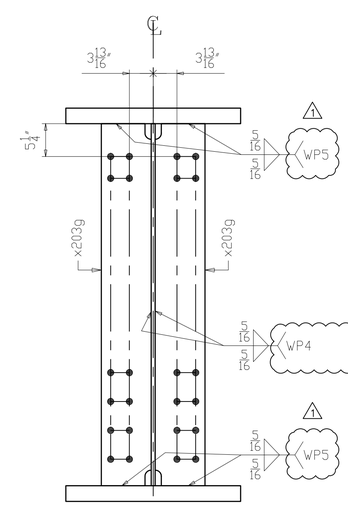

SECTION B
(INTERMEDIATE K-FRAME)

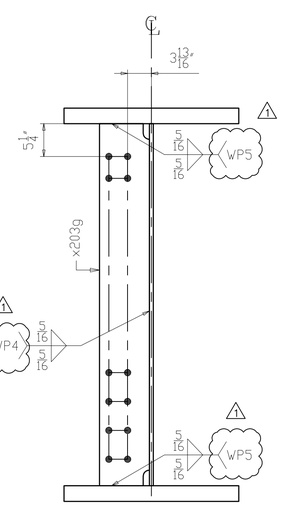

SECTION C
(INTERMEDIATE K-FRAME)

NO.	DATE	REMARKS	BY
1	10/10/19	WELD PROCEDURE # ADDED	DP

REVISIONS

Veritas STEEL
2-EAU CLAIRE, WI 3-WAUSAU, WI 4-PALATKA, FL
IENCA 1605

STRUCTURE: CUY-010-1976L, OH-10 WESTBOUND OVER GCRTA BLUE AND GREEN LINES
LOCATION: CLEVELAND, OHIO CUYAHOGA COUNTY
PROJECT NO.: 17-3000
ENGINEER: MICHAEL BAKER INTERNATIONAL
CONTRACTOR: KOKOSING

ITEM: GIRDER 214B4
SURFACE PREP.: SEE P201 OPEN HOLES: 1 1/16"Ø (U.N.O.)
PAINT: SEE P201

APPROVAL	DRAWN AM 06/07/19	SHEET NO.	PLANT	ORDER NO.
SHOP	CHECKED DP 07/10/19	214	3	317023A-20

LINE	SHIP MARK	NO. OF PCS.	ASS'Y MARK	MATERIAL SHAPE	LENGTH FT.	LENGTH IN.	MATERIAL SPEC.	ITEM NO.	REMARKS
1	215C4	ONE		GIRDER					37726
2		1	215TF	PL 2 1/2 x 28	61	8 7/8	A709-50WT2	2039	CVN 14694
3		1	215WB	PL 5/8 x 58	61	9 1/16	A709-50WT2	2043	CVN 7611
4		1	215BF	PL 2 1/2 x 28	61	8 7/8	A709-50WT2	2039	CVN 14694
5		2	x203F	PL 1 1/8 x 9	4	10	A709-50WT2	2057	CVN MIE 333
6		6	x203g	PL 1/2 x 8	4	10	A709-50WT2	2058	CVN 394

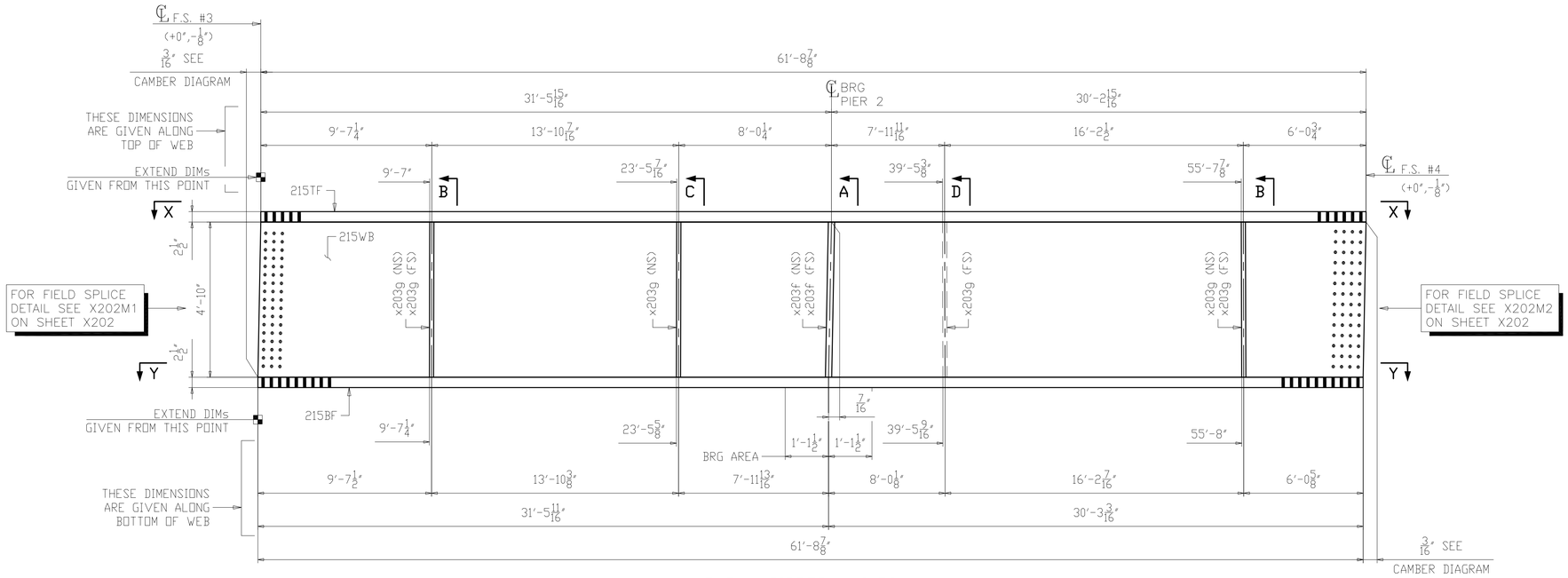

ONE ~ GIRDER ~ 215C4

1. FOR GENERAL NOTES SEE SHEET GN201.
2. FOR CAMBER AND FLANGE DIAGRAM SEE SHEET BG215.
3. FOR HORIZONTAL CURVING DIAGRAMS SEE SHEET HC204.
4. FOR GIRDER STANDARD DETAILS SEE SHEET x203.
5. FOR FIELD SPLICE DETAILS SEE X202.
6. T2 - DENOTES MATERIAL SUBJECT TO CHARPY V-NOTCH TESTING (ZONE 2).
7. ALL MATERIAL A709-50WT2 (UN).
8. BRG AREA - DENOTES AREA TO BE FLAT AND TRUE TO RECEIVE SOLE PLATE.

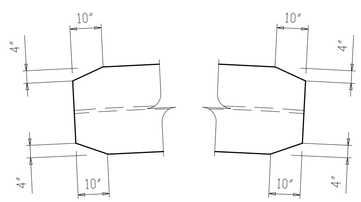

SECTION X-X

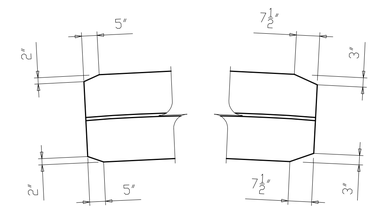

SECTION Y-Y

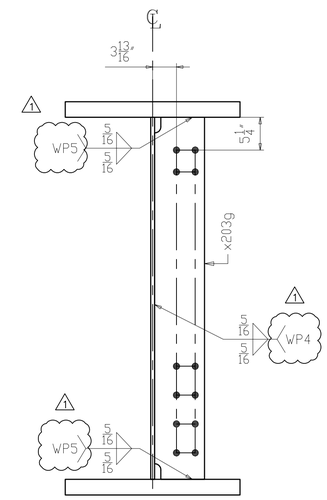

SECTION D
(INTERMEDIATE K-FRAME)

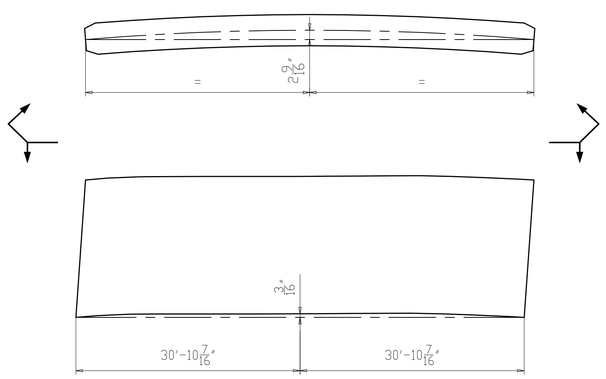

CAMBER & CURVE DIAGRAM

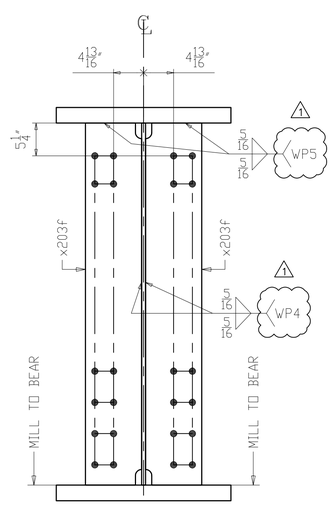

SECTION A
(K-FRAME PIER 2)

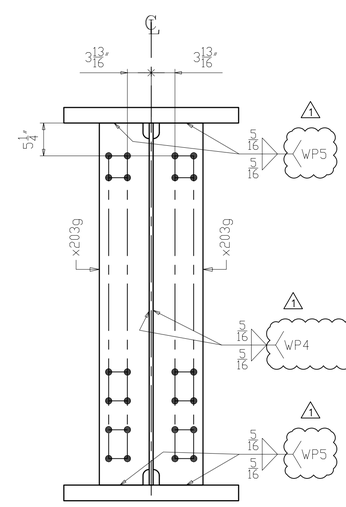

SECTION B
(INTERMEDIATE K-FRAME)

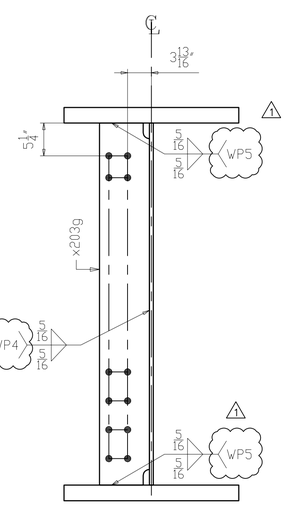

SECTION C
(INTERMEDIATE K-FRAME)

NO.	DATE	REMARKS	BY
1	10/10/19	WELD PROCEDURE # ADDED	DP

REVISIONS

Veritas STEEL
2-EAU CLAIRE, WI 3-WAUSAU, WI 4-PALATKA, FL

STRUCTURE	CUY-010-1976L, OH-10 WESTBOUND OVER GCRTA BLUE AND GREEN LINES
LOCATION	CLEVELAND, OHIO CUYAHOGA COUNTY
PROJECT NO.	17-3000
ENGINEER	MICHAEL BAKER INTERNATIONAL
CONTRACTOR	KOKOSING
ITEM	GIRDER 215C4
SURFACE PREP.	SEE P201
OPEN HOLES	1 1/16"Ø (U.N.O.)
PAINT	SEE P201

APPROVAL	DRAWN AM 06/07/19	SHEET NO.	PLANT	ORDER NO.
SHOP	CHECKED DP 07/10/19	215	3	317023A-20

LINE	SHIP MARK	NO. OF PCS.	ASS'Y MARK	MATERIAL SHAPE	LENGTH FT.	LENGTH IN.	MATERIAL SPEC.	ITEM NO.	REMARKS
1	216D4	ONE		GIRDER					37093
2		1	216TF	PL 2 1/2 x 28	61	1 1/2	A709-50WT2	2040	CVN 14548
3		1	216WB	PL 5/8 x 58	61	1 9/16	A709-50WT2	2044	CVN 7534
4		1	216BF	PL 2 1/2 x 28	61	1 1/2	A709-50WT2	2040	CVN 14548
5		1	x203d	PL 1 1/8 x 9	4	10	A709-50WT2	2057	CVN MIE 166
6		1	x203f	PL 1 1/8 x 9	4	10	A709-50WT2	2057	CVN MIE 166
7		2	x203g	PL 1/2 x 8	4	10	A709-50WT2	2058	CVN 131

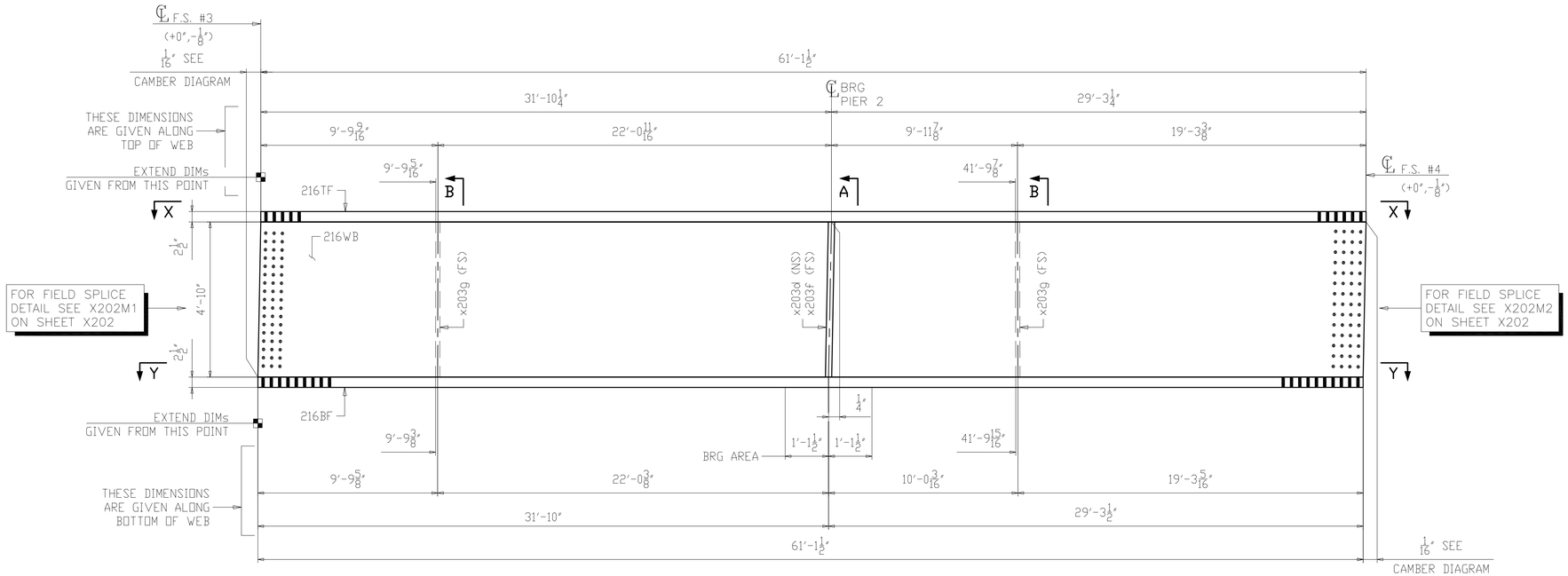

ONE ~ GIRDER ~ 216D4

1. FOR GENERAL NOTES SEE SHEET GN201.
2. FOR CAMBER AND FLANGE DIAGRAM SEE SHEET BG216.
3. FOR HORIZONTAL CURVING DIAGRAMS SEE SHEET HC204.
4. FOR GIRDER STANDARD DETAILS SEE SHEET x203.
5. FOR FIELD SPLICE DETAILS SEE X202.
6. T2 - DENOTES MATERIAL SUBJECT TO CHARPY V-NOTCH TESTING (ZONE 2).
7. ALL MATERIAL A709-50WT2 (UN).
8. BRG AREA - DENOTES AREA TO BE FLAT AND TRUE TO RECEIVE SOLE PLATE.

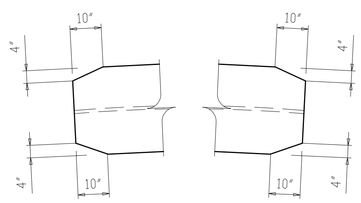

SECTION X-X

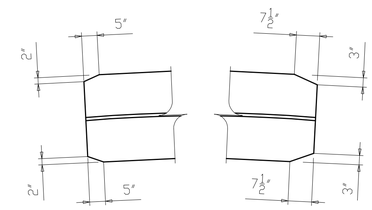

SECTION Y-Y

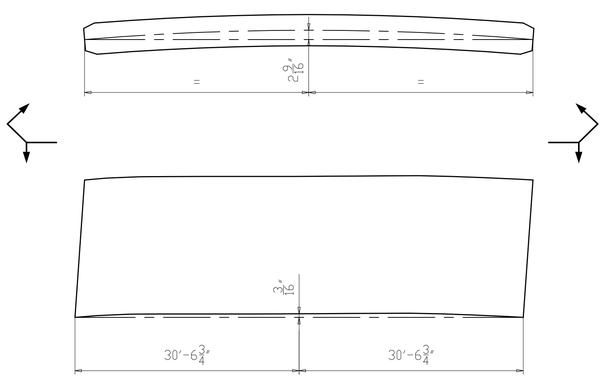

CAMBER & CURVE DIAGRAM

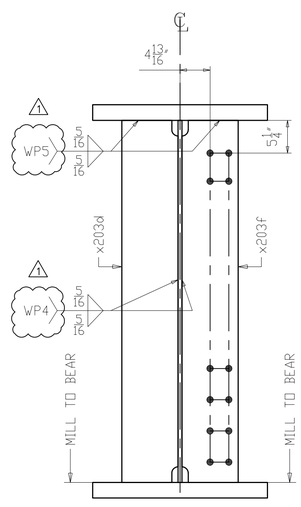

SECTION A
(K-FRAME PIER 2)

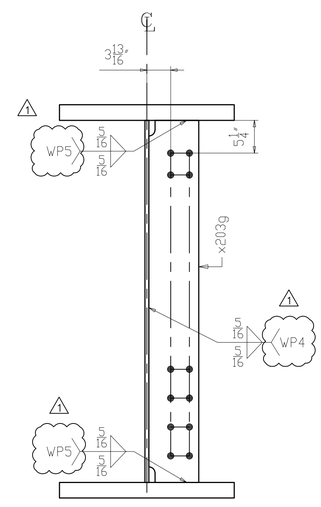

SECTION B
(INTERMEDIATE K-FRAME)

NO.	DATE	REMARKS	BY
1	10/10/19	WELD PROCEDURE # ADDED	DP

REVISIONS

Veritas STEEL
2-EAU CLAIRE, WI 3-WAUSAU, WI 4-PALATKA, FL
IAS AC 1605

STRUCTURE	CUY-010-1976L, OH-10 WESTBOUND OVER GCRTA BLUE AND GREEN LINES
LOCATION	CLEVELAND, OHIO CUYAHOGA COUNTY
PROJECT NO.	17-3000
ENGINEER	MICHAEL BAKER INTERNATIONAL
CONTRACTOR	KOKOSING
ITEM	GIRDER 216D4
SURFACE PREP.	SEE P201
OPEN HOLES	1 1/16"Ø (U.N.O.)
PAINT	SEE P201

APPROVAL	DRAWN AM 06/07/19	SHEET NO.	PLANT	ORDER NO.
SHOP	CHECKED DP 07/10/19	216	3	317023A-20

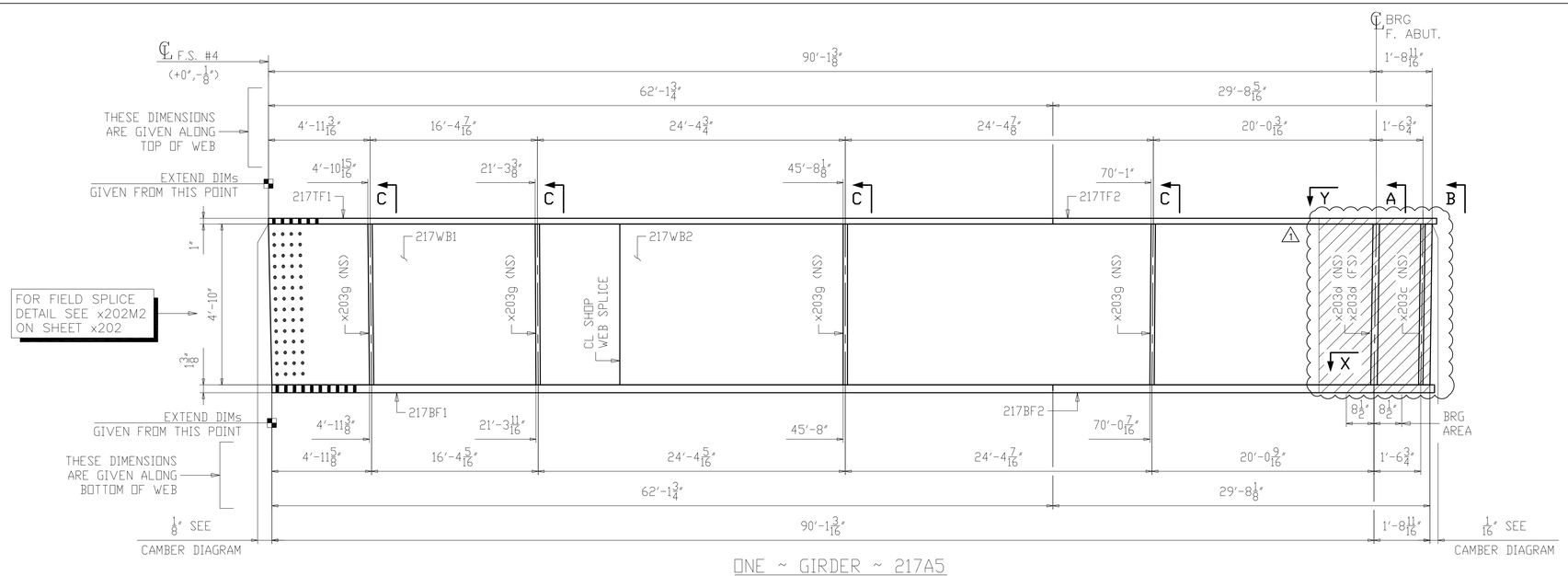

ONE ~ GIRDER ~ 217A5

(PARTIALLY PAINTED)

1. FOR GENERAL NOTES SEE SHEET GN201.
2. FOR PAINT NOTES SEE SHEET P201.
3. FOR CAMBER AND FLANGE DIAGRAM SEE SHEET BG217.
4. FOR HORIZONTAL CURVING DIAGRAMS SEE SHEET HC205.
5. FOR GIRDER STANDARD DETAILS SEE SHEET X203.
6. FOR FIELD SPLICE DETAILS SEE X202.
7. T2 - DENOTES MATERIAL SUBJECT TO CHARPY V-NOTCH TESTING (ZONE 2).
8. ALL MATERIAL A709-50WT2 (UN).
9. BRG AREA - DENOTES AREA TO BE FLAT AND TRUE TO RECEIVE SOLE PLATE.
10. ▨ - DENOTES PAINTED ZONE. △1

LINE	SHIP MARK	NO. OF PCS.	ASS'Y MARK	MATERIAL SHAPE	LENGTH FT.	LENGTH IN.	MATERIAL SPEC.	ITEM NO.	REMARKS
1	217A5	ONE		GIRDER					PART. PAINTED 27755
2		1	217TF1	PL 1 x 20	62	1 3/4	A709-50WT2	2045	CVN 4226
3		1	217TF2	PL 1 x 20	30	1 11/16	A709-50WT2	2143	CVN 2050
4		1	217WB1	PL 5/8 x 58	27	10 1/16	A709-50WT2	2147	CVN 3431
5		1	217WB2	PL 5/8 x 58	64	0	A709-50WT2	2049	CVN 7888
6		1	217BF1	PL 1 3/8 x 22	62	1 3/4	A709-50WT2	2053	CVN 6392
7		1	217BF2	PL 1 3/8 x 22	30	1 1/2	A709-50WT2	2149	CVN 3098
8		1	x203c	PL 1/2 x 9	4	10	A709-50WT2	2059	CVN 74
9		2	x203d	PL 1 1/8 x 9	4	10	A709-50WT2	2057	CVN MIE 333
10		4	x203g	PL 1/2 x 8	4	10	A709-50WT2	2058	CVN 263

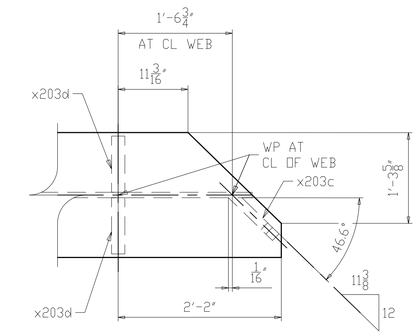

SECTION Y

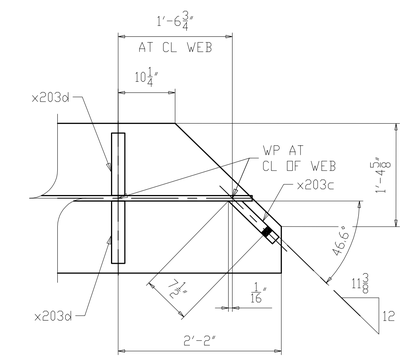

SECTION X

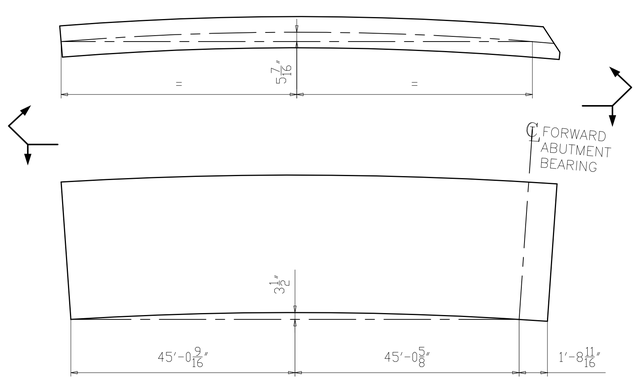

CAMBER & CURVE DIAGRAM

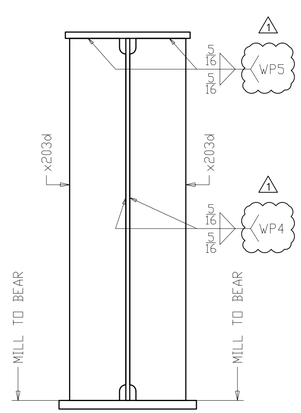

SECTION A
(BEARING FORWARD ABUTMENT)

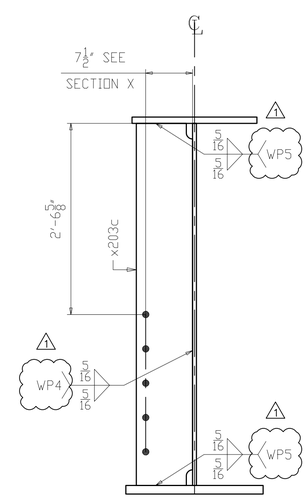

SECTION B
(FORWARD ABUTMENT K-FRAME)

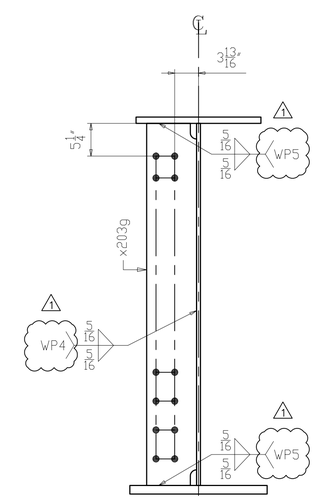

SECTION C
(INTERMEDIATE K-FRAME)

NO.	DATE	REMARKS	BY
△1	10/10/19	AS PER APPROVAL COMMENTS / WP # ADDED	DP

REVISIONS

Veritas STEEL
2-EAU CLAIRE, WI 3-WAUSAU, WI 4-PALATKA, FL
IAS NCA 1605

STRUCTURE	CUY-010-1976L, OH-10 WESTBOUND OVER GCRTA BLUE AND GREEN LINES
LOCATION	CLEVELAND, OHIO CUYAHOGA COUNTY
PROJECT NO.	17-3000
ENGINEER	MICHAEL BAKER INTERNATIONAL
CONTRACTOR	KOKOSING
ITEM	GIRDER 217A5
SURFACE PREP.	SEE P201 OPEN HOLES 1 1/16"Ø (U.N.O.)
PAINT	SEE P201

APPROVAL	DRAWN AM 06/07/19	SHEET NO.	PLANT	ORDER NO.
SHOP	CHECKED DP 07/10/19	217	3	317023A-20

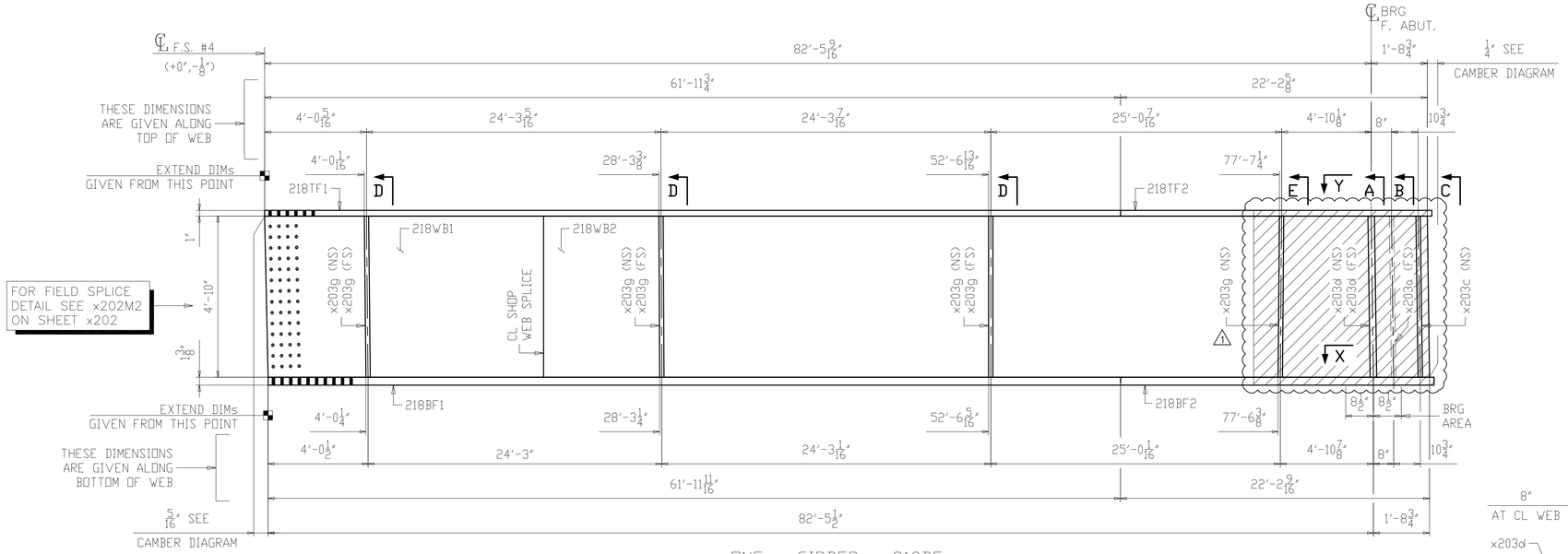

LINE	SHIP MARK	NO. OF PCS.	ASS'Y MARK	MATERIAL SHAPE	LENGTH FT.	LENGTH IN.	MATERIAL SPEC.	ITEM NO.	REMARKS
1	218B5	ONE		GIRDER					PART. PAINTED 25778
2		1	218TF1	PL 1 x 20	61	11 3/4	A709-50WT2	2046	CVN 4215
3		1	218TF2	PL 1 x 20	22	7 7/8	A709-50WT2	2144	CVN 1541
4		1	218WB1	PL 5/8 x 58	20	2 5/16	A709-50WT2	2148	CVN 2489
5		1	218WB2	PL 5/8 x 58	64	0 1/4	A709-50WT2	2050	CVN 7888
6		1	218BF1	PL 1 3/8 x 22	61	11 11/16	A709-50WT2	2054	CVN 6374
7		1	218BF2	PL 1 3/8 x 22	22	7 13/16	A709-50WT2	2150	CVN 2330
8		1	x203a	PL 1/2 x 9	4	10	A709-50WT2	2059	CVN 74
9		1	x203c	PL 1/2 x 9	4	10	A709-50WT2	2059	CVN 74
10		2	x203d	PL 1 1/8 x 9	4	10	A709-50WT2	2057	CVN MIE 333
11		7	x203g	PL 1/2 x 8	4	10	A709-50WT2	2058	CVN 460

ONE ~ GIRDER ~ 218B5

(PARTIALLY PAINTED)

1. FOR GENERAL NOTES SEE SHEET GN201.
2. FOR PAINT NOTES SEE SHEET P201.
3. FOR CAMBER AND FLANGE DIAGRAM SEE SHEET BG218.
4. FOR HORIZONTAL CURVING DIAGRAMS SEE SHEET HC205.
5. FOR GIRDER STANDARD DETAILS SEE SHEET X203.
6. FOR FIELD SPLICE DETAILS SEE X202.
7. T2 - DENOTES MATERIAL SUBJECT TO CHARPY V-NOTCH TESTING (ZONE 2).
8. ALL MATERIAL A709-50WT2 (UN).
9. BRG AREA - DENOTES AREA TO BE FLAT AND TRUE TO RECEIVE SOLE PLATE.
10. ▨ - DENOTES PAINTED ZONE. △1

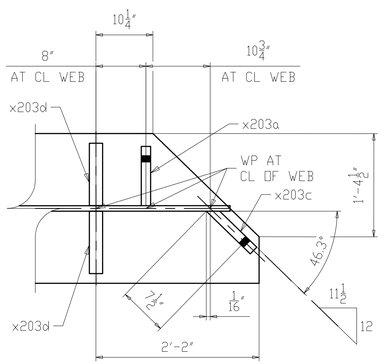

SECTION X

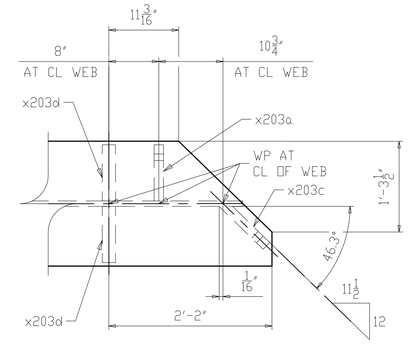

SECTION Y

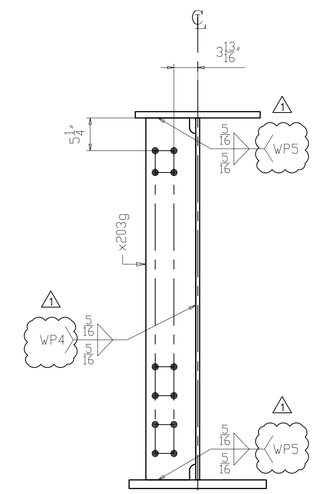

SECTION E
(INTERMEDIATE K-FRAME)

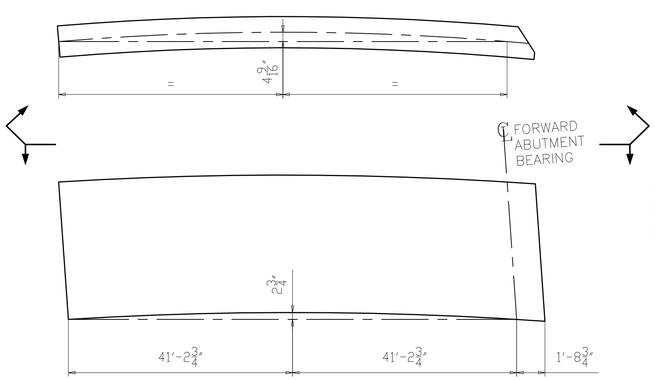

CAMBER & CURVE DIAGRAM

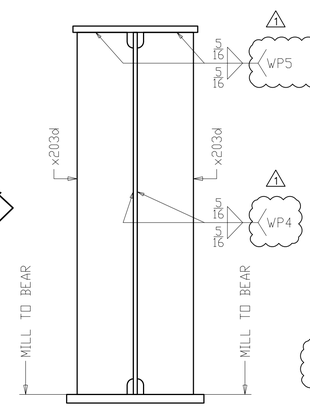

SECTION A
(BEARING FORWARD ABUTMENT)

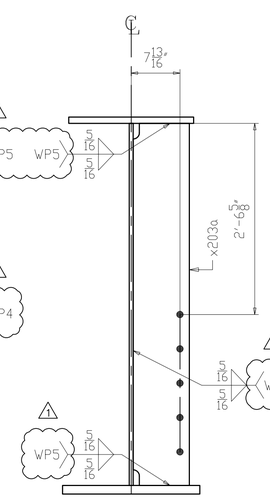

SECTION B
(FORWARD ABUTMENT K-FRAME)

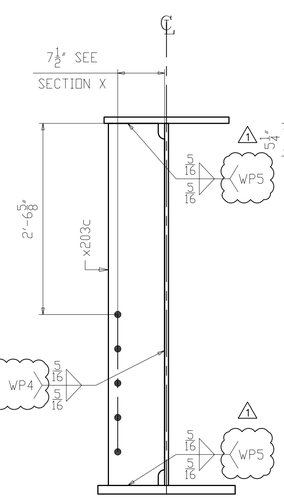

SECTION C
(FORWARD ABUTMENT K-FRAME)

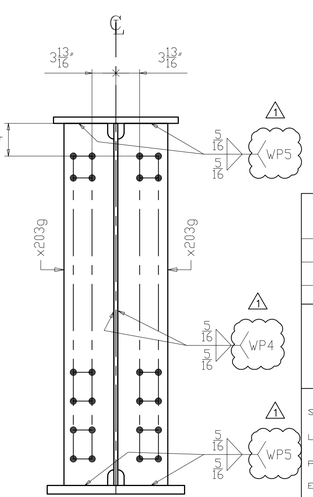

SECTION D
(INTERMEDIATE K-FRAME)

NO.	DATE	REMARKS	BY
1	10/10/19	AS PER APPROVAL COMMENTS / WP # ADDED	DP

REVISIONS

Veritas STEEL
2-EAU CLAIRE, WI 3-WAUSAU, WI 4-PALATKA, FL
TENCA 1605

STRUCTURE	CUY-010-1976L, OH-10 WESTBOUND OVER GCRTA BLUE AND GREEN LINES
LOCATION	CLEVELAND, OHIO CUYAHOGA COUNTY
PROJECT NO.	17-3000
ENGINEER	MICHAEL BAKER INTERNATIONAL
CONTRACTOR	KOKOSING
ITEM	GIRDER 218B5
SURFACE PREP.	SEE P201 OPEN HOLES 1 1/16"Ø (U.N.O.)
PAINT	SEE P201

APPROVAL	DRAWN AM 06/07/19	SHEET NO.	PLANT	ORDER NO.
SHOP	CHECKED DP 07/10/19	218	3	317023A-20

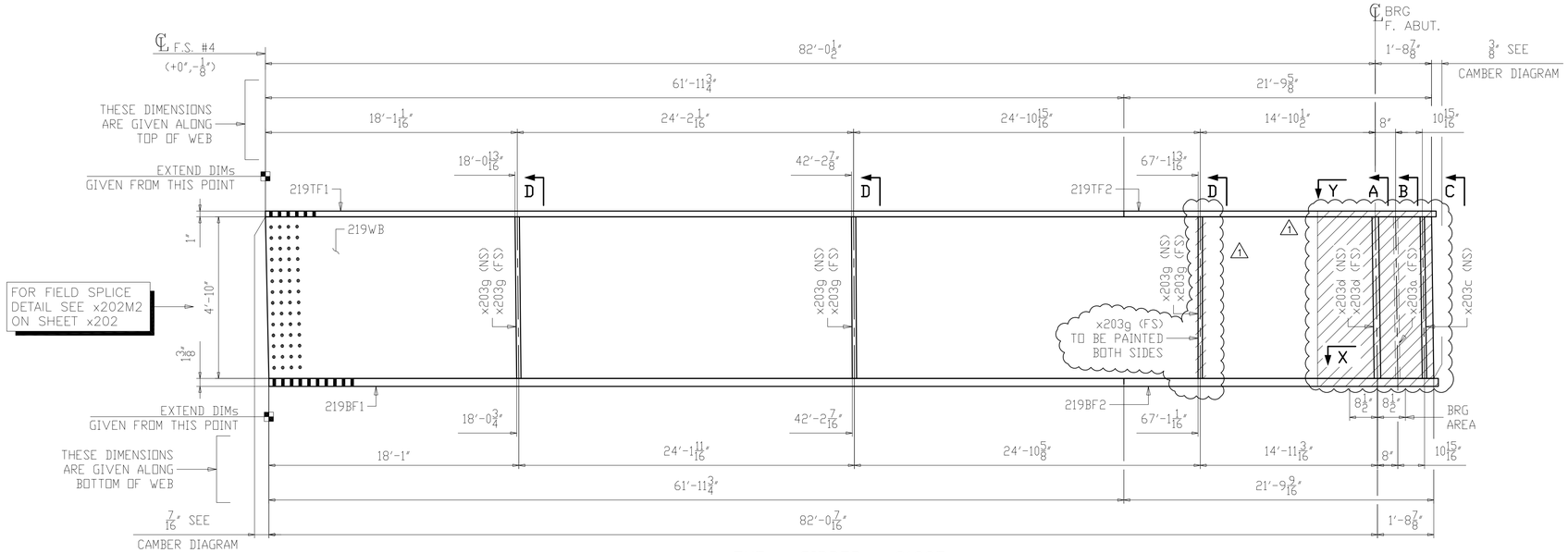

ONE ~ GIRDER ~ 219C5

(PARTIALLY PAINTED)

1. FOR GENERAL NOTES SEE SHEET GN201.
2. FOR PAINT NOTES SEE SHEET P201.
3. FOR CAMBER AND FLANGE DIAGRAM SEE SHEET BG219.
4. FOR HORIZONTAL CURVING DIAGRAMS SEE SHEET HC205.
5. FOR GIRDER STANDARD DETAILS SEE SHEET X203.
6. FOR FIELD SPLICE DETAILS SEE X202.
7. T2 - DENOTES MATERIAL SUBJECT TO CHARPY V-NOTCH TESTING (ZONE 2).
8. ALL MATERIAL A709-50WT2 (UN).
9. BRG AREA - DENOTES AREA TO BE FLAT AND TRUE TO RECEIVE SOLE PLATE.
10. ▨ - DENOTES PAINTED ZONE. (1)

LINE	SHIP MARK	NO. OF PCS.	ASS'Y MARK	MATERIAL SHAPE	LENGTH FT.	LENGTH IN.	MATERIAL SPEC.	ITEM NO.	REMARKS
1	219C5	ONE		GIRDER					PART. PAINTED 25593
2		1	219TF1	PL 1 x 20	61	11 3/4	A709-50WT2	2047	CVN 4215
3		1	219TF2	PL 1 x 20	22	2 13/16	A709-50WT2	2145	CVN 1512
4		1	219WB	PL 5/8 x 58	83	9 3/4	A709-50WT2	2051	CVN 10330
5		1	219BF1	PL 1 3/8 x 22	61	11 3/4	A709-50WT2	2055	CVN 6375
6		1	219BF2	PL 1 3/8 x 22	22	2 3/4	A709-50WT2	2151	CVN 2286
7		1	x203a	PL 1/2 x 9	4	10	A709-50WT2	2059	CVN 74
8		1	x203c	PL 1/2 x 9	4	10	A709-50WT2	2059	CVN 74
9		2	x203d	PL 1 1/8 x 9	4	10	A709-50WT2	2057	CVN MIE 333
10		6	x203g	PL 1/2 x 8	4	10	A709-50WT2	2058	CVN 394

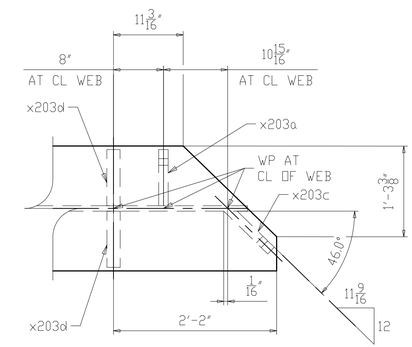

SECTION Y

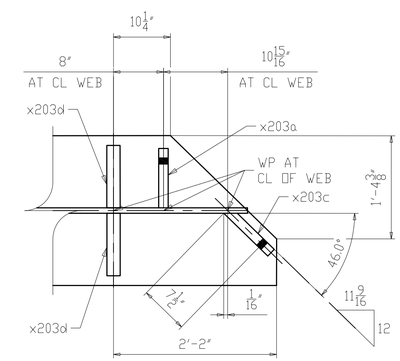

SECTION X

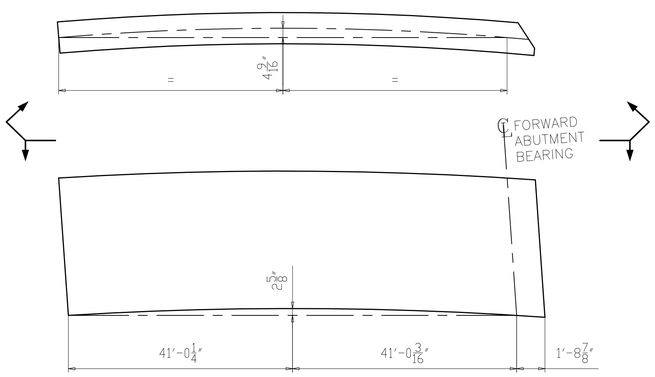

CAMBER & CURVE DIAGRAM

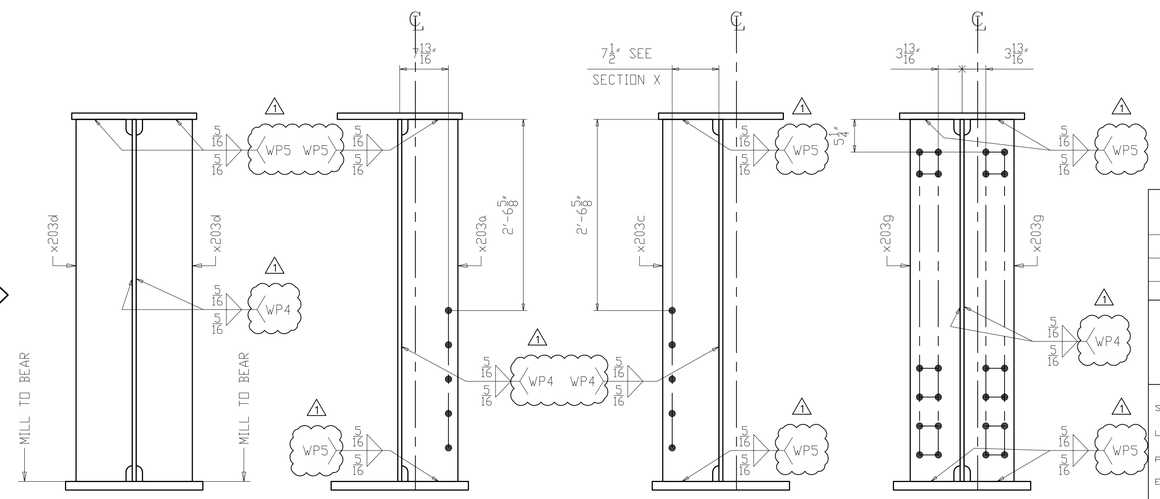

SECTION A
(BEARING FORWARD ABUTMENT)

SECTION B
(FORWARD ABUTMENT K-FRAME)

SECTION C
(FORWARD ABUTMENT K-FRAME)

SECTION D
(INTERMEDIATE K-FRAME)

NO.	DATE	REMARKS	BY
1	10/10/19	AS PER APPROVAL COMMENTS / WP # ADDED	DP

REVISIONS

Veritas STEEL
2-EAU CLAIRE, WI 3-WAUSAU, WI 4-PALATKA, FL
IENCA 1605

STRUCTURE: CUY-010-1976L, OH-10 WESTBOUND OVER GCRTA BLUE AND GREEN LINES
LOCATION: CLEVELAND, OHIO CUYAHOGA COUNTY
PROJECT NO. 17-3000
ENGINEER MICHAEL BAKER INTERNATIONAL
CONTRACTOR KOKOSING

ITEM GIRDER 219C5
SURFACE PREP. SEE P201 OPEN HOLES 1 1/16"Ø (U.N.O.)
PAINT SEE P201

APPROVAL	DRAWN AM 06/07/19	SHEET NO.	PLANT	ORDER NO.
SHOP	CHECKED DP 07/10/19	219	3	317023A-20

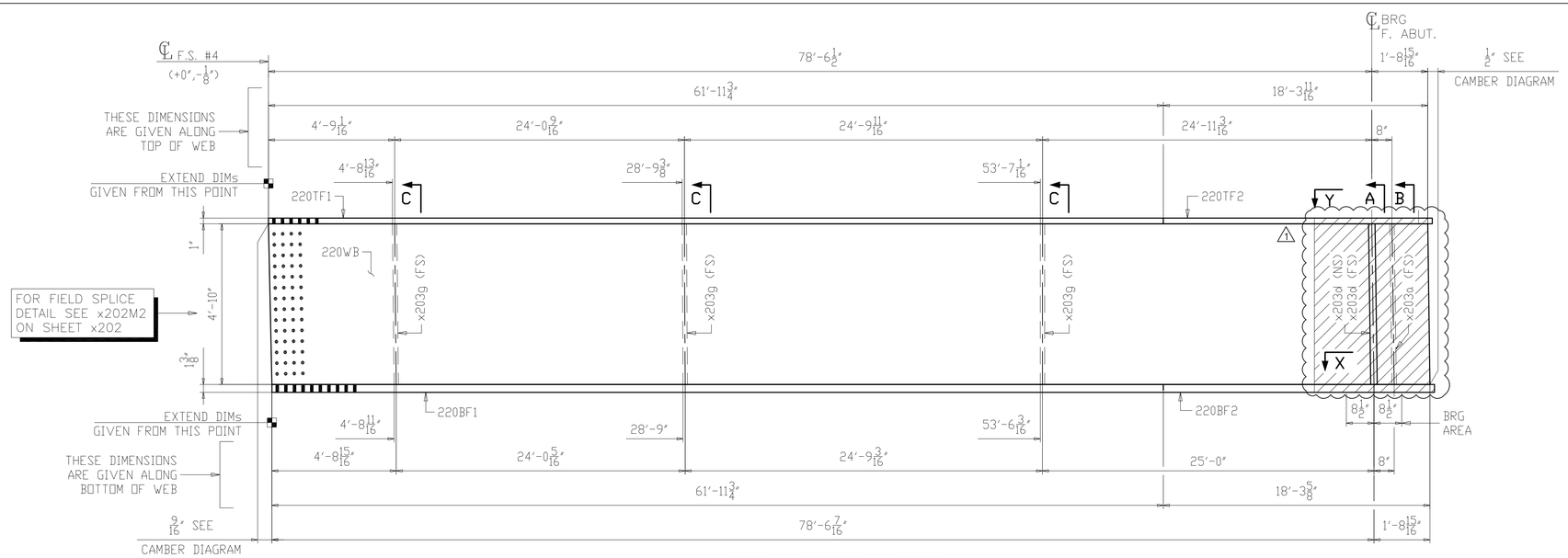

ONE ~ GIRDER ~ 220D5

(PARTIALLY PAINTED)

1. FOR GENERAL NOTES SEE SHEET GN201.
2. FOR PAINT NOTES SEE SHEET P201.
3. FOR CAMBER AND FLANGE DIAGRAM SEE SHEET BG220.
4. FOR HORIZONTAL CURVING DIAGRAMS SEE SHEET HC205.
5. FOR GIRDER STANDARD DETAILS SEE SHEET X203.
6. FOR FIELD SPLICE DETAILS SEE X202.
7. T2 - DENOTES MATERIAL SUBJECT TO CHARPY V-NOTCH TESTING (ZONE 2).
8. ALL MATERIAL A709-50WT2 (UN).
9. BRG AREA - DENOTES AREA TO BE FLAT AND TRUE TO RECEIVE SOLE PLATE.
10. ▨ - DENOTES PAINTED ZONE. (1)

LINE	SHIP MARK	NO. OF PCS.	ASS'Y MARK	MATERIAL SHAPE	LENGTH FT.	LENGTH IN.	MATERIAL SPEC.	ITEM NO.	REMARKS
1	220D5	ONE		GIRDER					PART. PAINTED 24294
2		1	220TF1	PL 1 x 20	61	11 3/4	A709-50WT2	2048	CVN 4215
3		1	220TF2	PL 1 x 20	18	8 3/4	A709-50WT2	2146	CVN 1274
4		1	220WB	PL 5/8 x 58	80	3 15/16	A709-50WT2	2052	CVN 9900
5		1	220BF1	PL 1 3/8 x 22	61	11 3/4	A709-50WT2	2056	CVN 6375
6		1	220BF2	PL 1 3/8 x 22	18	8 11/16	A709-50WT2	2152	CVN 1926
7		1	x203a	PL 1/2 x 9	4	10	A709-50WT2	2059	CVN 74
8		2	x203d	PL 1 1/8 x 9	4	10	A709-50WT2	2057	CVN MIE 333
9		3	x203g	PL 1/2 x 8	4	10	A709-50WT2	2058	CVN 197

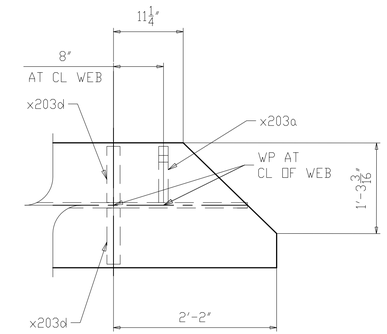

SECTION Y

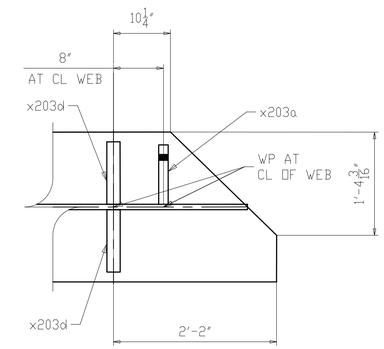

SECTION X

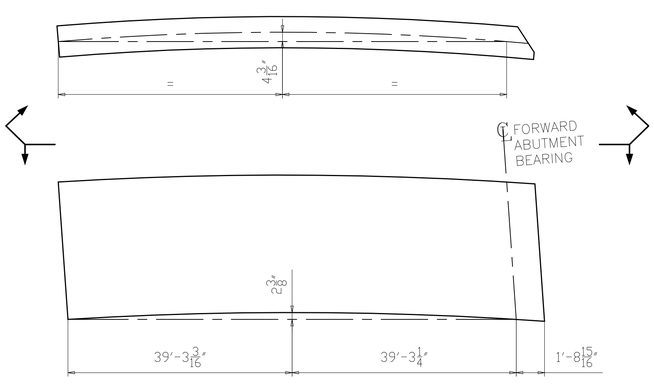

CAMBER & CURVE DIAGRAM

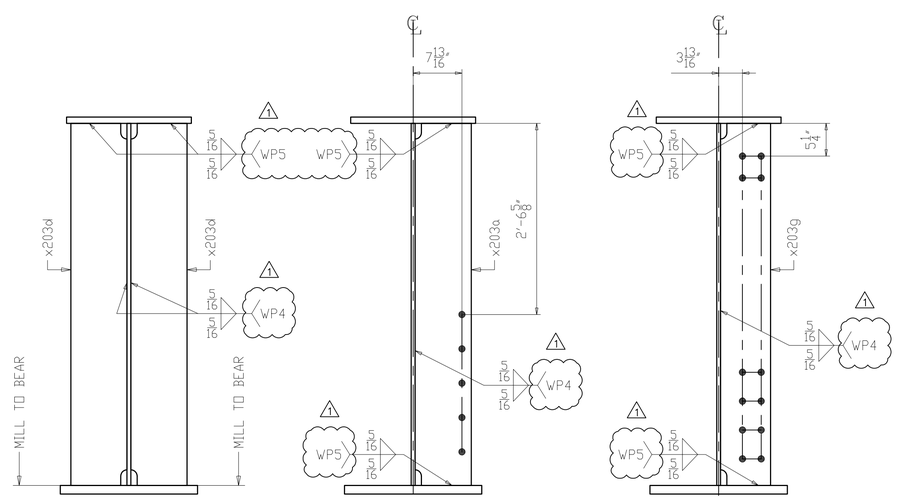

SECTION A
(BEARING FORWARD ABUTMENT)

SECTION B
(FORWARD ABUTMENT K-FRAME)

SECTION C
(INTERMEDIATE K-FRAME)

NO.	DATE	REMARKS	BY
1	10/10/19	AS PER APPROVAL COMMENTS / WP # ADDED	DP

REVISIONS

Veritas STEEL
2-EAU CLAIRE, WI 3-WAUSAU, WI 4-PALATKA, FL
IAS 1605

STRUCTURE: CUY-010-1976L, OH-10 WESTBOUND OVER GCRTA BLUE AND GREEN LINES
LOCATION: CLEVELAND, OHIO CUYAHOGA COUNTY
PROJECT NO. 17-3000
ENGINEER MICHAEL BAKER INTERNATIONAL
CONTRACTOR KOKOSING

ITEM GIRDER 220D5
SURFACE PREP. SEE P201 OPEN HOLES 1 1/16"Ø (U.N.O.)
PAINT SEE P201

APPROVAL	DRAWN AM 06/07/19	SHEET NO.	PLANT	ORDER NO.
SHOP	CHECKED DP 07/10/19	220	3	317023A-20

LINE	SHIP MARK	NO. OF PCS.	ASS'Y MARK	MATERIAL SHAPE	LENGTH FT.	LENGTH IN.	MATERIAL SPEC.	ITEM NO.	REMARKS	
1	221CF1	ONE		ABUTMENT K-FRAME					PAINTED	857
2		1	x204a	PL 1/2 x 25	2	1	A709-50WT2	2093	CVN	89
3		1	x204b	PL 1/2 x 25	2	1	A709-50WT2	2092	CVN BENT	89
4		1	x204f	MC12 x 50	10	0 3/4	A709-50WT2	2088	CVN	503
5		1	x204t	L5 x 5 x 1/2	5	4 3/4	A709-50WT2	2090	CVN	87
6		1	x204v	L5 x 5 x 1/2	5	5 9/16	A709-50WT2	2090	CVN	89

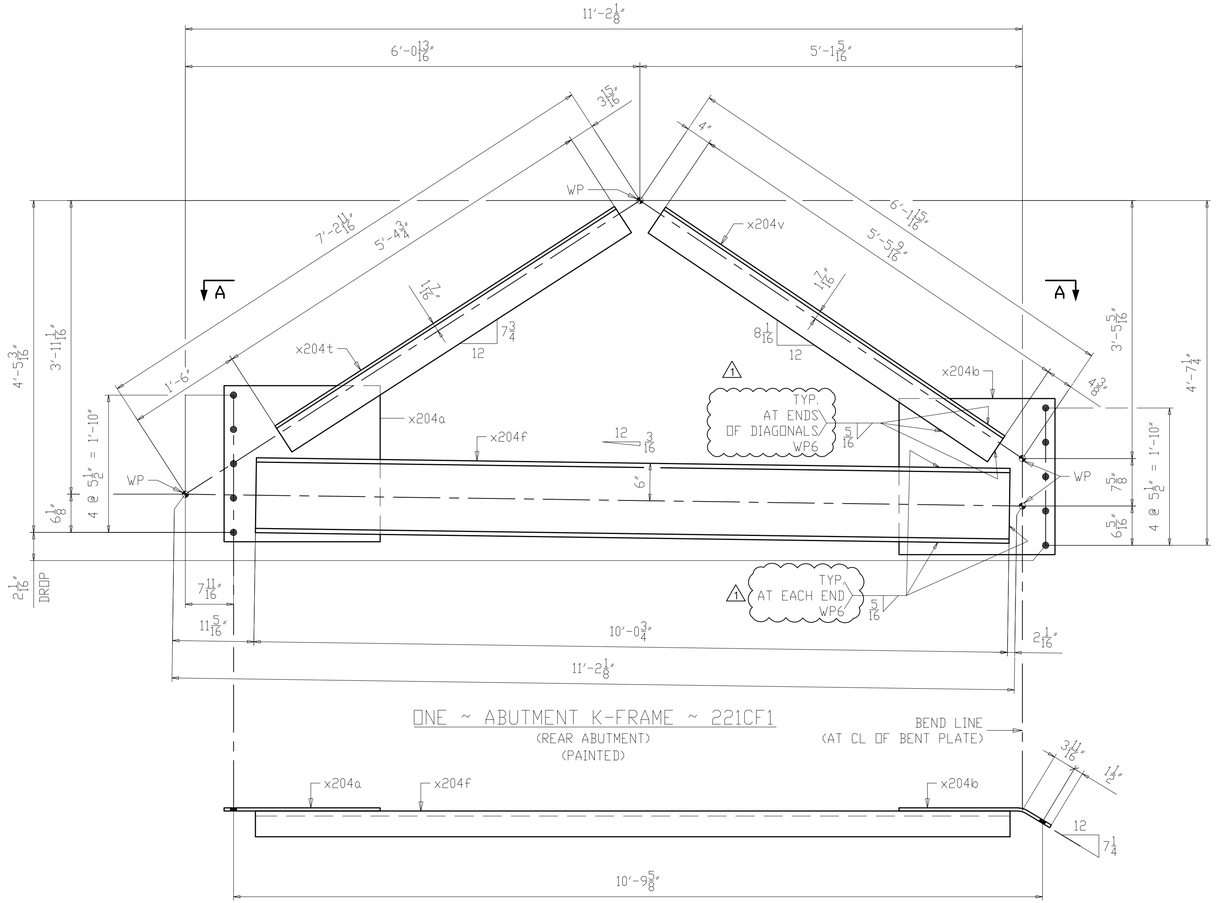

ONE ~ ABUTMENT K-FRAME ~ 221CF1
(REAR ABUTMENT)
(PAINTED)

SECTION A-A

NOTES:
1. FOR GENERAL NOTES SEE SHEET GN201.
2. FOR PAINT NOTES SEE SHEET P201.
3. ALL MATERIAL A709-50WT2 (UN).
4. T2 - DENOTES MATERIAL SUBJECT TO CHARPY V-NOTCH TESTING.
5. FOR K-FRAME STANDARD DETAILS SEE X204.

NO.	DATE	REMARKS	BY
1	10/10/19	WELD PROCEDURE # ADDED	DP

REVISIONS

Veritas STEEL
2-EAU CLAIRE, WI 3-WAUSAU, WI 4-PALATKA, FL
TENCA 1605

STRUCTURE: CUY-010-1976L, OH-10 WESTBOUND OVER GCRTA BLUE AND GREEN LINES
LOCATION: CLEVELAND, OHIO CUYAHOGA COUNTY
PROJECT NO.: 17-3000
ENGINEER: MICHAEL BAKER INTERNATIONAL
CONTRACTOR: KOKOSING

ITEM: REAR ABUTMENT K-FRAME
SURFACE PREP.: SEE P201 OPEN HOLES: 1 1/16"Ø (U.N.O.)
PAINT: SEE P201

APPROVAL	DRAWN AM 06/11/19	SHEET NO.	PLANT	ORDER NO.
SHOP	CHECKED DP 07/10/19	221	3	317023A-37

LINE	SHIP MARK	NO. OF PCS.	ASS'Y MARK	MATERIAL SHAPE	LENGTH FT.	LENGTH IN.	MATERIAL SPEC.	ITEM NO.	REMARKS	
1	222CF1	ONE		ABUTMENT K-FRAME					PAINTED	858
2		1	x204a	PL 1/2 x 25	2	1	A709-50WT2	2093	CVN	89
3		1	x204c	PL 1/2 x 25	2	1	A709-50WT2	2092	CVN BENT	89
4		1	x204g	MC12 x 50	10	0 15/16	A709-50WT2	2088	CVN	504
5		1	x204w	L5 x 5 x 1/2	5	4 9/16	A709-50WT2	2090	CVN	87
6		1	x204y	L5 x 5 x 1/2	5	5 15/16	A709-50WT2	2090	CVN	89

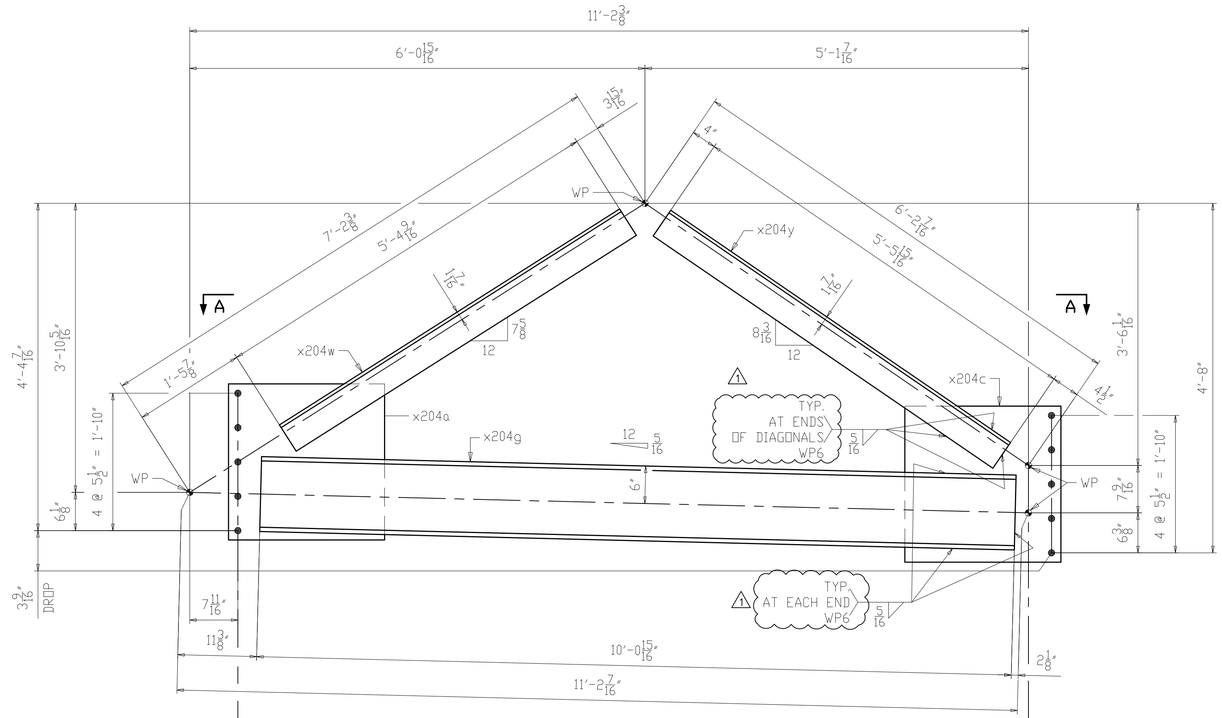

ONE ~ ABUTMENT K-FRAME ~ 222CF1

(REAR ABUTMENT)
(PAINTED)

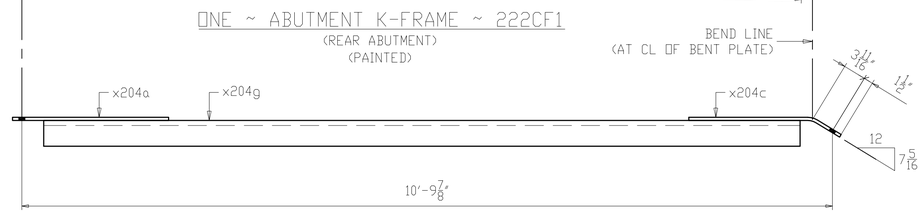

SECTION A-A

NOTES:
1. FOR GENERAL NOTES SEE SHEET GN201.
2. FOR PAINT NOTES SEE SHEET P201.
3. ALL MATERIAL A709-50WT2 (UN).
4. T2 - DENOTES MATERIAL SUBJECT TO CHARPY V-NOTCH TESTING.
5. FOR K-FRAME STANDARD DETAILS SEE X204.

NO.	DATE	REMARKS	BY
1	10/10/19	WELD PROCEDURE # ADDED	DP

REVISIONS

Veritas STEEL
2-EAU CLAIRE, WI 3-WAUSAU, WI 4-PALATKA, FL
IENCA 1605

STRUCTURE: CUY-010-1976L, OH-10 WESTBOUND OVER GCRTA BLUE AND GREEN LINES
LOCATION: CLEVELAND, OHIO CUYAHOGA COUNTY
PROJECT NO. 17-3000
ENGINEER: MICHAEL BAKER INTERNATIONAL
CONTRACTOR: KOKOSING

ITEM: REAR ABUTMENT K-FRAME
SURFACE PREP.: SEE P201 OPEN HOLES: 1 1/16"Ø (U.N.O.)
PAINT: SEE P201

APPROVAL	DRAWN AM 06/11/19	SHEET NO.	PLANT	ORDER NO.
SHOP	CHECKED DP 07/10/19	222	3	317023A-37

LINE	SHIP MARK	NO. OF PCS.	ASS'Y MARK	MATERIAL SHAPE	LENGTH FT.	LENGTH IN.	MATERIAL SPEC.	ITEM NO.	REMARKS	
1	223CF1	ONE		ABUTMENT K-FRAME					PAINTED	859
2		1	x204a	PL 1/2 x 25	2	1	A709-50WT2	2093	CVN	89
3		1	x204d	PL 1/2 x 25	2	1	A709-50WT2	2092	CVN BENT	89
4		1	x204k	MC12 x 50	10	1 3/16	A709-50WT2	2088	CVN	505
5		1	x204aa	L5 x 5 x 1/2	5	4 5/8	A709-50WT2	2090	CVN	87
6		1	x204ab	L5 x 5 x 1/2	5	6	A709-50WT2	2090	CVN	89

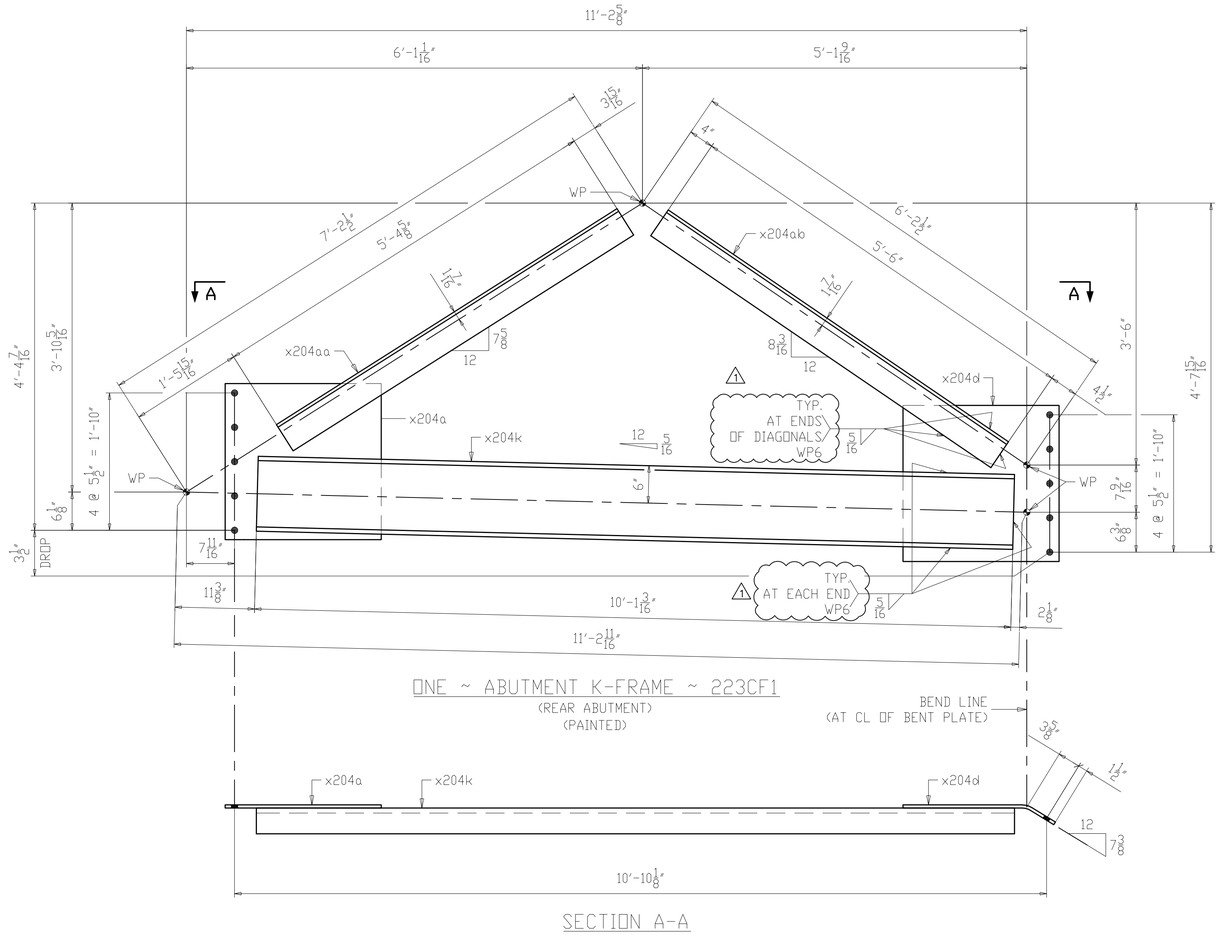

SECTION A-A

NOTES:
1. FOR GENERAL NOTES SEE SHEET GN201.
2. FOR PAINT NOTES SEE SHEET P201.
3. ALL MATERIAL A709-50WT2 (UN).
4. T2 - DENOTES MATERIAL SUBJECT TO CHARPY V-NOTCH TESTING.
5. FOR K-FRAME STANDARD DETAILS SEE X204.

NO.	DATE	REMARKS	BY
1	10/10/19	WELD PROCEDURE # ADDED	DP

REVISIONS

Veritas STEEL
2-EAU CLAIRE, WI 3-WAUSAU, WI 4-PALATKA, FL
IAS 1605

STRUCTURE: CUY-010-1976L, OH-10 WESTBOUND OVER GCRTA BLUE AND GREEN LINES
LOCATION: CLEVELAND, OHIO CUYAHOGA COUNTY
PROJECT NO. 17-3000
ENGINEER: MICHAEL BAKER INTERNATIONAL
CONTRACTOR: KOKOSING

ITEM: REAR ABUTMENT K-FRAME
SURFACE PREP. SEE P201 OPEN HOLES $1\frac{1}{16}$"Ø (U.N.O.)
PAINT SEE P201

APPROVAL	DRAWN AM 06/11/19	SHEET NO.	PLANT	ORDER NO.
SHOP	CHECKED DP 07/10/19	223	3	317023A-37

LINE	SHIP MARK	NO. OF PCS.	ASS'Y MARK	MATERIAL SHAPE	LENGTH FT.	LENGTH IN.	MATERIAL SPEC.	ITEM NO.	REMARKS
1	224CF1	ONE		ABUTMENT K-FRAME					PAINTED 979
2		1	x204a	PL 1/2 x 25	2	1	A709-50WT2	2093	CVN 89
3		1	x204m	MC12 x 50	12	1 1/4	A709-50WT2	2089	CVN 605
4		1	x204ac	L5 x 5 x 1/2	6	0 9/16	A709-50WT2	2091	CVN 98
5		1	x204ad	L5 x 5 x 1/2	6	0 1/2	A709-50WT2	2091	CVN 98
6		1	x205a	PL 1/2 x 25	2	1	A709-50WT2	2092	CVN BENT 89

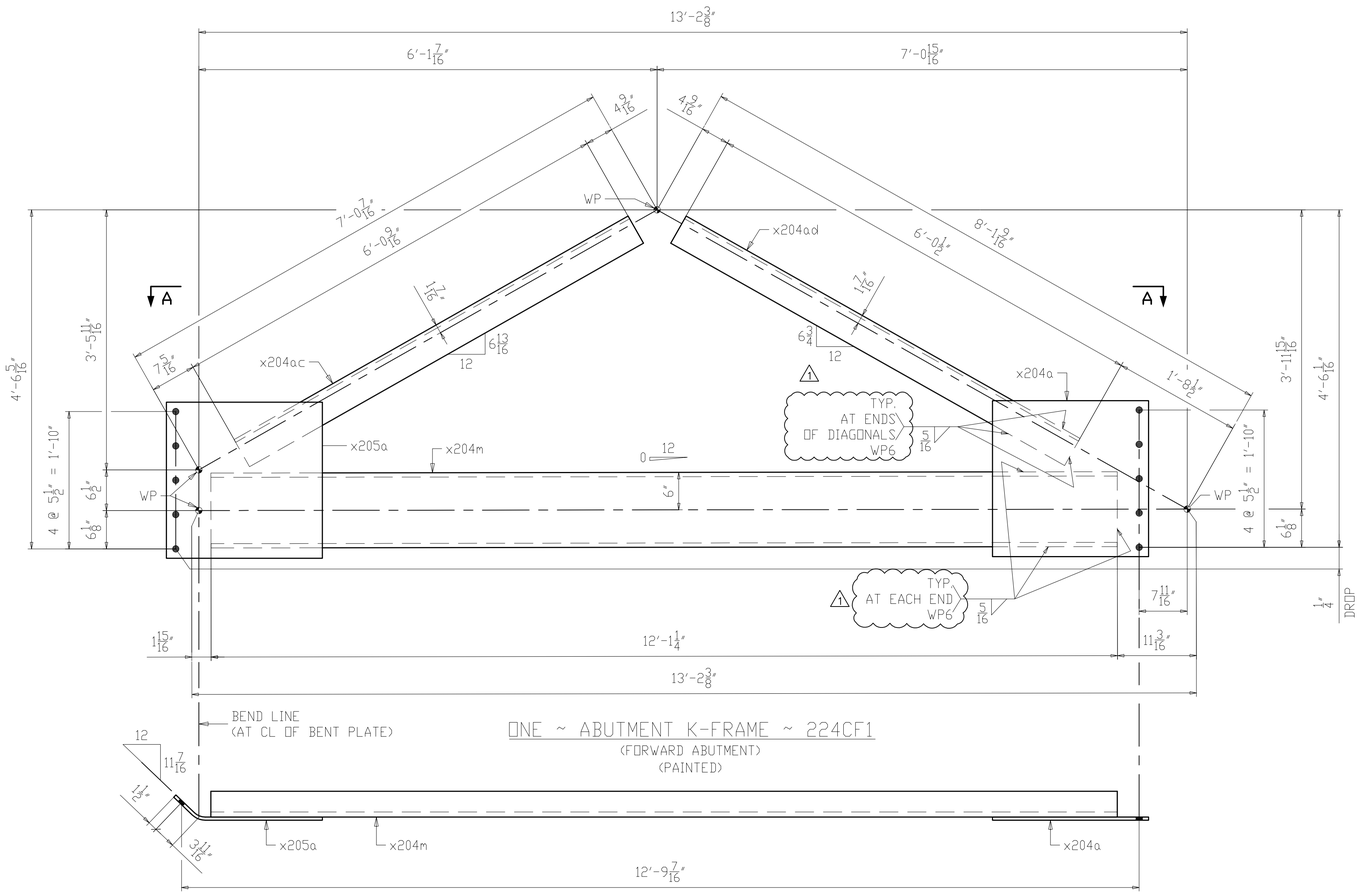

SECTION A-A

NOTES:
1. FOR GENERAL NOTES SEE SHEET GN201.
2. FOR PAINT NOTES SEE SHEET P201.
3. ALL MATERIAL A709-50WT2 (UN).
4. T2 - DENOTES MATERIAL SUBJECT TO CHARPY V-NOTCH TESTING.
5. FOR K-FRAME STANDARD DETAILS SEE X204 & X205.

NO.	DATE	REMARKS	BY
1	10/10/19	WELD PROCEDURE # ADDED	DP

REVISIONS

Veritas STEEL
2-EAU CLAIRE, WI 3-WAUSAU, WI 4-PALATKA, FL
TENCA 1605

STRUCTURE: CUY-010-1976L, OH-10 WESTBOUND OVER GCRTA BLUE AND GREEN LINES
LOCATION: CLEVELAND, OHIO CUYAHOGA COUNTY
PROJECT NO.: 17-3000
ENGINEER: MICHAEL BAKER INTERNATIONAL
CONTRACTOR: KOKOSING

ITEM: FORWARD ABUTMENT K-FRAME
SURFACE PREP.: SEE P201 OPEN HOLES: 1 1/16"ø (U.N.O.)
PAINT: SEE P201

APPROVAL	DRAWN AM 06/11/19	SHEET NO.	PLANT	ORDER NO.
SHOP	CHECKED DP 07/10/19	224	3	317023A-37

LINE	SHIP MARK	NO. OF PCS.	ASS'Y MARK	MATERIAL SHAPE	LENGTH FT.	LENGTH IN.	MATERIAL SPEC.	ITEM NO.	REMARKS	
1	225CF1	ONE		ABUTMENT K-FRAME					PAINTED	982
2		1	x204a	PL 1/2 x 25	2	1	A709-50WT2	2093	CVN	89
3		1	x204n	MC12 x 50	12	1 7/8	A709-50WT2	2089	CVN	608
4		1	x204ac	L5 x 5 x 1/2	6	0 9/16	A709-50WT2	2091	CVN	98
5		1	x204af	L5 x 5 x 1/2	6	0 15/16	A709-50WT2	2091	CVN	98
6		1	x205b	PL 1/2 x 25	2	1	A709-50WT2	2092	CVN BENT	89

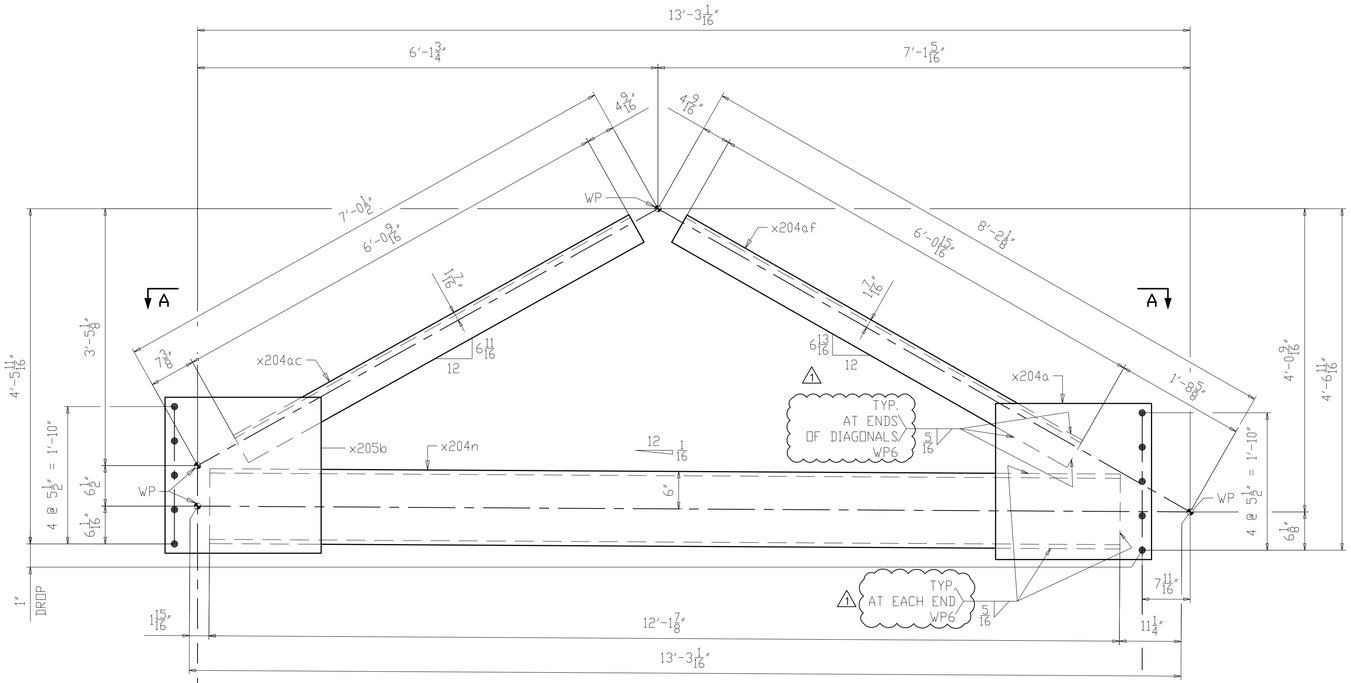

ONE ~ ABUTMENT K-FRAME ~ 225CF1
(FORWARD ABUTMENT)
(PAINTED)

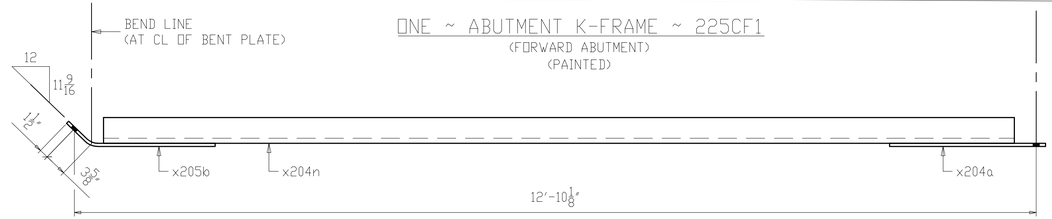

SECTION A-A

NOTES:
1. FOR GENERAL NOTES SEE SHEET GN201.
2. FOR PAINT NOTES SEE SHEET P201.
3. ALL MATERIAL A709-50WT2 (UN).
4. T2 - DENOTES MATERIAL SUBJECT TO CHARPY V-NOTCH TESTING.
5. FOR K-FRAME STANDARD DETAILS SEE X204 & X205.

NO.	DATE	REMARKS	BY
1	10/10/19	WELD PROCEDURE # ADDED	DP

REVISIONS

Veritas STEEL
2-EAU CLAIRE, WI 3-WAUSAU, WI 4-PALATKA, FL
IAS 1605

STRUCTURE: CUY-010-1976L, OH-10 WESTBOUND OVER GCRTA BLUE AND GREEN LINES
LOCATION: CLEVELAND, OHIO CUYAHOGA COUNTY
PROJECT NO. 17-3000
ENGINEER: MICHAEL BAKER INTERNATIONAL
CONTRACTOR: KOKOSING
ITEM: FORWARD ABUTMENT K-FRAME
SURFACE PREP. SEE P201 OPEN HOLES 1 1/16"Ø (U.N.O.)
PAINT: SEE P201

APPROVAL	DRAWN AM 06/11/19	SHEET NO.	PLANT	ORDER NO.
SHOP	CHECKED DP 07/10/19	225	3	317023A-37

LINE	SHIP MARK	NO. OF PCS.	ASS'Y MARK	MATERIAL SHAPE	LENGTH FT.	LENGTH IN.	MATERIAL SPEC.	ITEM NO.	REMARKS
1	226CF1	ONE		ABUTMENT K-FRAME					PAINTED 986
2		1	x204a	PL 1/2 x 25	2	1	A709-50WT2	2093	CVN 89
3		1	x204p	MC12 x 50	12	2 5/8	A709-50WT2	2089	CVN 611
4		1	x204ag	L5 x 5 x 1/2	6	0 13/16	A709-50WT2	2091	CVN 98
5		1	x204ak	L5 x 5 x 1/2	6	1 1/16	A709-50WT2	2091	CVN 99
6		1	x205c	PL 1/2 x 25	2	1	A709-50WT2	2092	CVN BENT 89

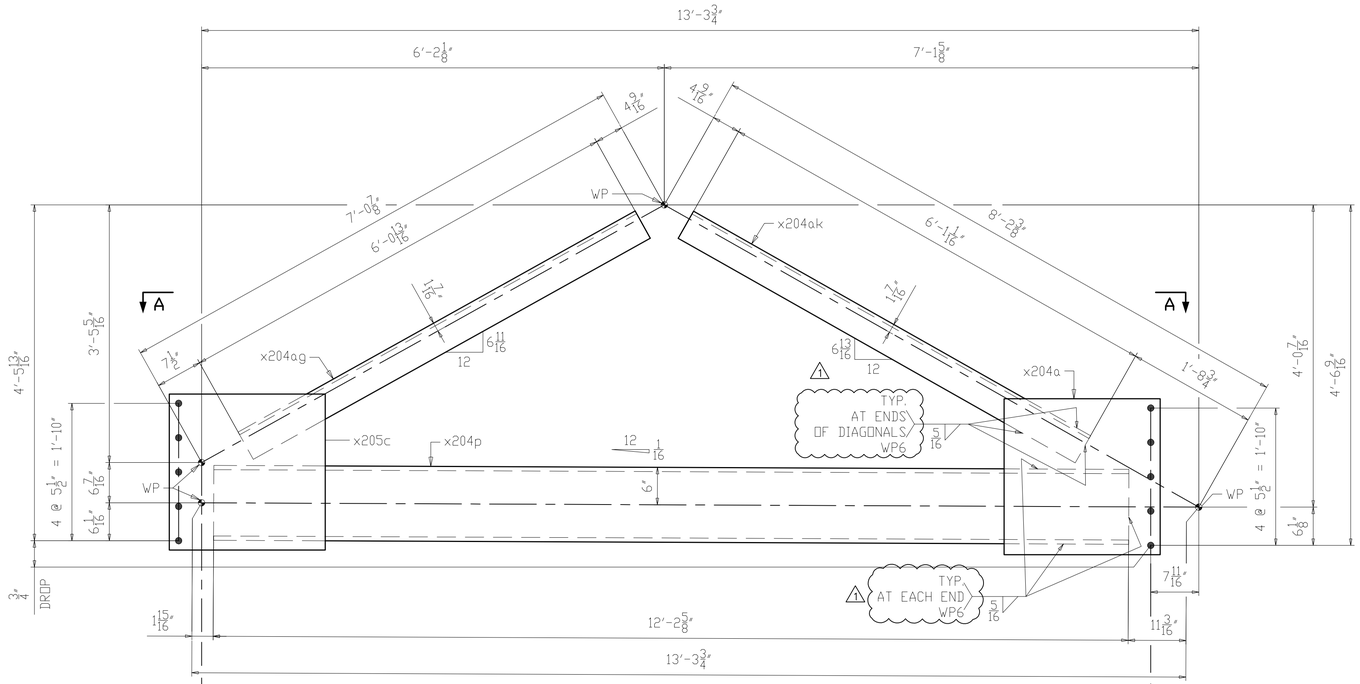

BEND LINE
(AT CL OF BENT PLATE)

ONE ~ ABUTMENT K-FRAME ~ 226CF1
(FORWARD ABUTMENT)
(PAINTED)

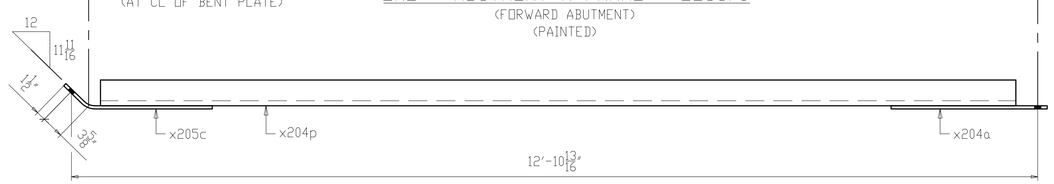

SECTION A-A

NOTES:
1. FOR GENERAL NOTES SEE SHEET GN201.
2. FOR PAINT NOTES SEE SHEET P201.
3. ALL MATERIAL A709-50WT2 (UN).
4. T2 - DENOTES MATERIAL SUBJECT TO CHARPY V-NOTCH TESTING.
5. FOR K-FRAME STANDARD DETAILS SEE X204 & X205.

NO.	DATE	REMARKS	BY
1	10/10/19	WELD PROCEDURE # ADDED	DP

REVISIONS

Veritas STEEL
2-EAU CLAIRE, WI 3-WAUSAU, WI 4-PALATKA, FL
IENCA 1605

STRUCTURE: CUY-010-1976L, OH-10 WESTBOUND OVER GCRTA BLUE AND GREEN LINES
LOCATION: CLEVELAND, OHIO CUYAHOGA COUNTY
PROJECT NO. 17-3000
ENGINEER: MICHAEL BAKER INTERNATIONAL
CONTRACTOR: KOKOSING
ITEM: FORWARD ABUTMENT K-FRAME
SURFACE PREP. SEE P201 OPEN HOLES 1 1/16"Ø (U.N.O.)
PAINT: SEE P201

APPROVAL	DRAWN AM 06/11/19	SHEET NO.	PLANT	ORDER NO.
SHOP	CHECKED DP 07/10/19	226	3	317023A-37

LINE	SHIP MARK	NO. OF PCS.	ASS'Y MARK	MATERIAL SHAPE	LENGTH FT.	LENGTH IN.	MATERIAL SPEC.	ITEM NO.	REMARKS
1	227CF1	ONE		PIER K-FRAME					1261
2		1	x205d	PL 1/2 x 13	3	8	A709-50WT2	2103	CVN 81
3		1	x205f	PL 1/2 x 7 1/2	1	2 1/2	A709-50WT2	2101	CVN BENT 15
4		1	x205g	PL 1/2 x 7 1/2	1	2 1/2	A709-50WT2	2101	CVN BENT 15
5		1	x205n	PL 1/2 x 18	1	9	A709-50WT2	2102	CVN BENT 54
6		1	x205p	PL 1/2 x 18	1	9	A709-50WT2	2102	CVN BENT 54
7		1	x207a	L8 x 8 x 3/4	15	0 1/4	A709-50WT2	2096	CVN 584
8		1	x207k	L5 x 5 x 1/2	15	0 1/4	A709-50WT2	2097	CVN 243
9		1	x207w	L5 x 5 x 1/2	6	8 1/16	A709-50WT2	2100	CVN 108
10		1	x207y	L5 x 5 x 1/2	6	7 1/8	A709-50WT2	2100	CVN 107

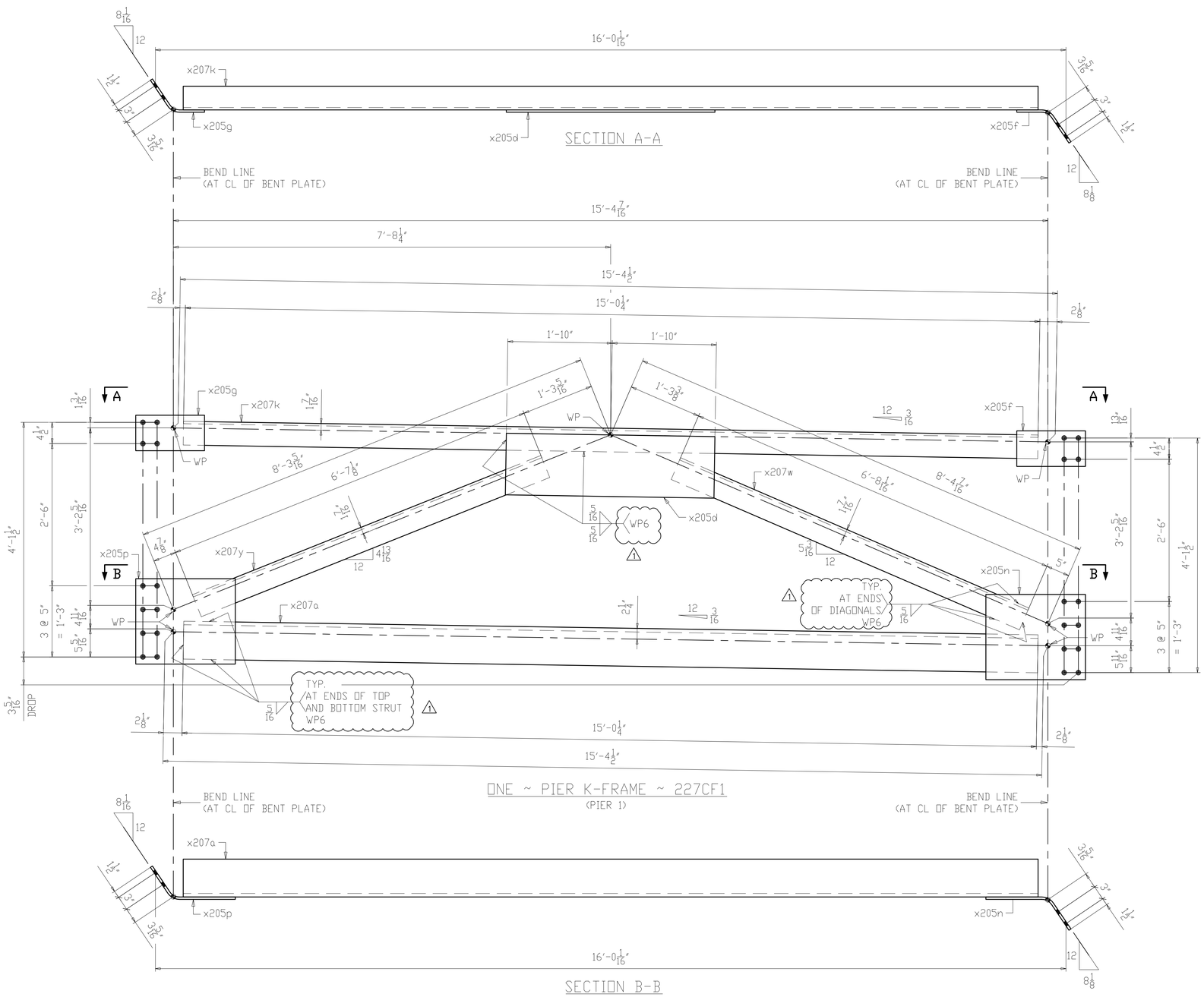

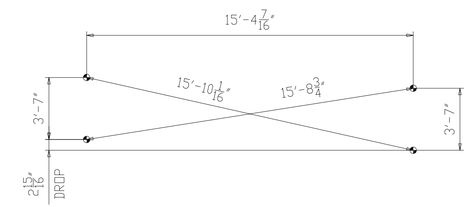

CROSS-CHECK DIAGRAM

(DIMENSIONS ARE GIVEN TO THE OUTERMOST WORKING POINTS)

NOTES:
1. FOR GENERAL NOTES SEE SHEET GN201.
2. ALL MATERIAL A709-50WT2 (UN).
3. T2 - DENOTES MATERIAL SUBJECT TO CHARPY V-NOTCH TESTING.
4. FOR K-FRAME STANDARD DETAILS SEE X205 & X207.

NO.	DATE	REMARKS	BY
1	10/10/19	WELD PROCEDURE # ADDED	DP

REVISIONS

Veritas STEEL
2-EAU CLAIRE, WI 3-WAUSAU, WI 4-PALATKA, FL
IENCA 1605

STRUCTURE: CUY-010-1976L, OH-10 WESTBOUND OVER GCRTA BLUE AND GREEN LINES
LOCATION: CLEVELAND, OHIO CUYAHOGA COUNTY
PROJECT NO. 17-3000
ENGINEER: MICHAEL BAKER INTERNATIONAL
CONTRACTOR: KOKOSING

ITEM: PIER 1 K-FRAME
SURFACE PREP. SEE P201 OPEN HOLES 1 1/16"Ø (U.N.O.)
PAINT SEE P201

APPROVAL	DRAWN AM 06/11/19	SHEET NO.	PLANT	ORDER NO.
SHOP	CHECKED DP 07/10/19	227	3	317023A-37

LINE	SHIP MARK	NO. OF PCS.	ASS'Y MARK	MATERIAL SHAPE	LENGTH FT.	LENGTH IN.	MATERIAL SPEC.	ITEM NO.	REMARKS
1	228CF1	ONE		PIER K-FRAME					1269
2		1	x205d	PL 1/2 x 13	3	8	A709-50WT2	2103	CVN 81
3		1	x205g	PL 1/2 x 7 1/2	1	2 1/2	A709-50WT2	2101	CVN BENT 15
4		1	x205k	PL 1/2 x 7 1/2	1	2 1/2	A709-50WT2	2101	CVN BENT 15
5		1	x205p	PL 1/2 x 18	1	9	A709-50WT2	2102	CVN BENT 54
6		1	x206a	PL 1/2 x 18	1	9	A709-50WT2	2102	CVN BENT 54
7		1	x207b	L8 x 8 x 3/4	15	1 11/16	A709-50WT2	2096	CVN 589
8		1	x207m	L5 x 5 x 1/2	15	1 3/4	A709-50WT2	2097	CVN 245
9		1	x207aa	L5 x 5 x 1/2	6	8 3/4	A709-50WT2	2100	CVN 109
10		1	x207ab	L5 x 5 x 1/2	6	7 7/16	A709-50WT2	2100	CVN 107

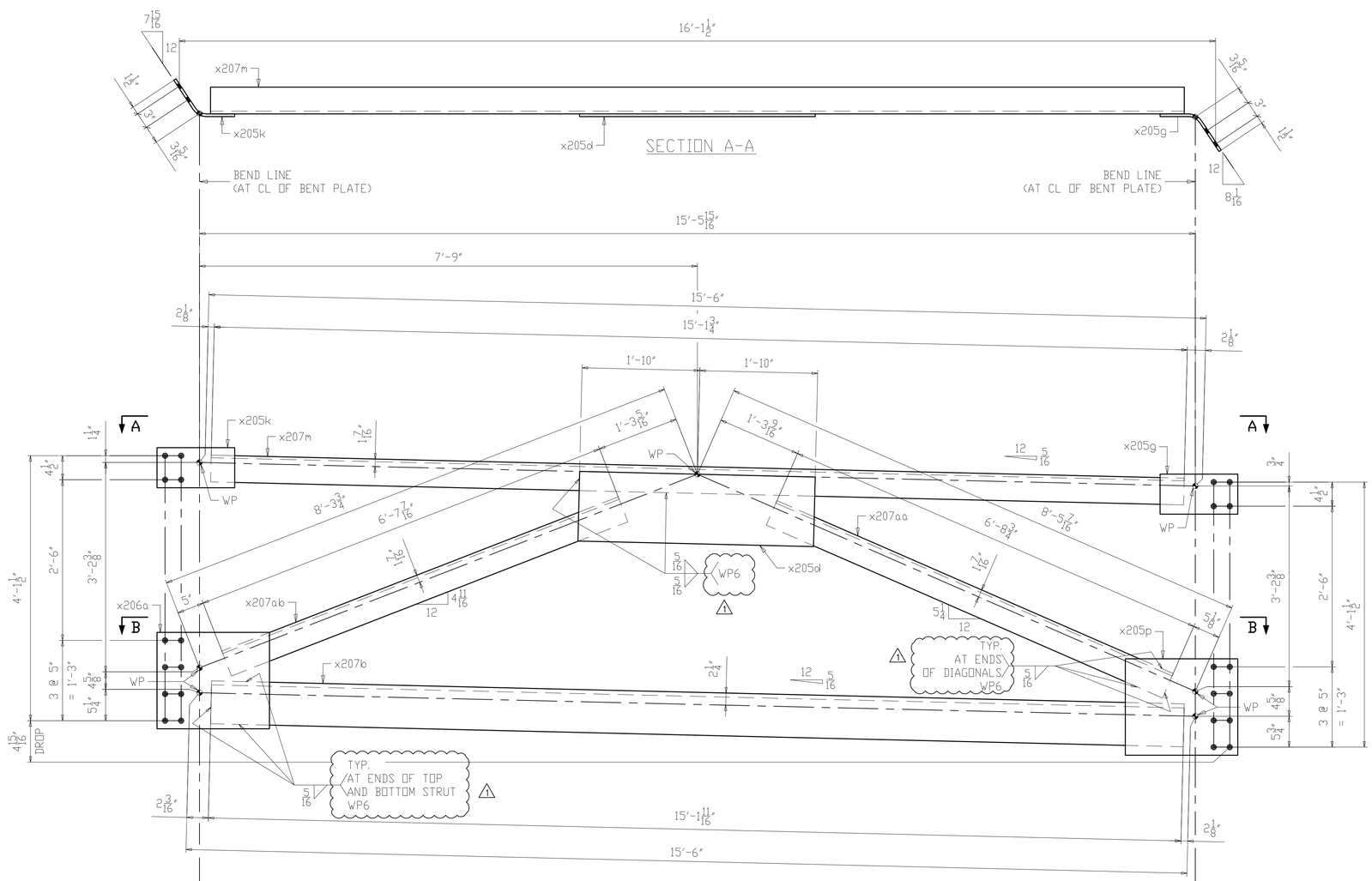

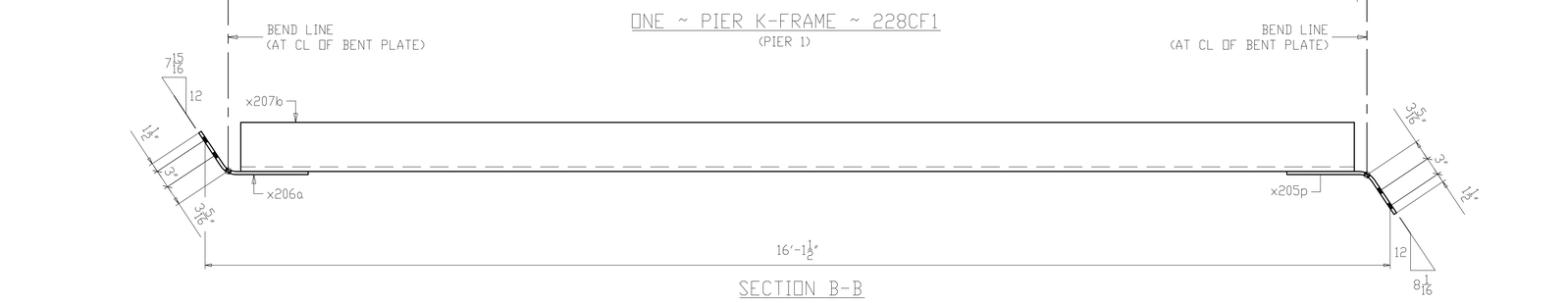

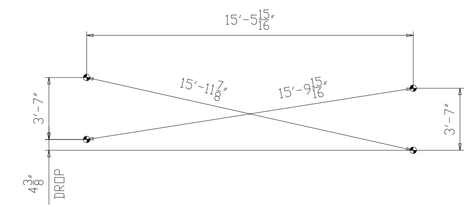

CROSS-CHECK DIAGRAM
(DIMENSIONS ARE GIVEN TO THE OUTERMOST WORKING POINTS)

NOTES:
1. FOR GENERAL NOTES SEE SHEET GN201.
2. ALL MATERIAL A709-50WT2 (UN).
3. T2 - DENOTES MATERIAL SUBJECT TO CHARPY V-NOTCH TESTING.
4. FOR K-FRAME STANDARD DETAILS SEE X205, X206 & X207.

NO.	DATE	REMARKS	BY
1	10/10/19	WELD PROCEDURE # ADDED	DP

REVISIONS

Veritas STEEL
2-EAU CLAIRE, WI 3-WAUSAU, WI 4-PALATKA, FL
IENCA 1605

STRUCTURE: CUY-010-1976L, OH-10 WESTBOUND OVER GCRTA BLUE AND GREEN LINES
LOCATION: CLEVELAND, OHIO CUYAHOGA COUNTY
PROJECT NO.: 17-3000
ENGINEER: MICHAEL BAKER INTERNATIONAL
CONTRACTOR: KOKOSING

ITEM: PIER 1 K-FRAME
SURFACE PREP.: SEE P201 OPEN HOLES: 1 1/16"ø (U.N.O.)
PAINT: SEE P201

APPROVAL	DRAWN AM 06/11/19	SHEET NO.	PLANT	ORDER NO.
SHOP	CHECKED DP 07/10/19	228	3	317023A-37

LINE	SHIP MARK	NO. OF PCS.	ASS'Y MARK	MATERIAL SHAPE	LENGTH FT.	LENGTH IN.	MATERIAL SPEC.	ITEM NO.	REMARKS
1	229CF1	ONE		PIER K-FRAME					1278
2		1	x205d	PL 1/2 x 13	3	8	A709-50WT2	2103	CVN 81
3		1	x205k	PL 1/2 x 7 1/2	1	2 1/2	A709-50WT2	2101	CVN BENT 15
4		1	x205m	PL 1/2 x 7 1/2	1	2 1/2	A709-50WT2	2101	CVN BENT 15
5		1	x206a	PL 1/2 x 18	1	9	A709-50WT2	2102	CVN BENT 54
6		1	x206b	PL 1/2 x 18	1	9	A709-50WT2	2102	CVN BENT 54
7		1	x207c	L8 x 8 x 3/4	15	3 1/4	A709-50WT2	2096	CVN 594
8		1	x207n	L5 x 5 x 1/2	15	3 5/16	A709-50WT2	2097	CVN 247
9		1	x207ac	L5 x 5 x 1/2	6	9 1/4	A709-50WT2	2100	CVN 110
10		1	x207ad	L5 x 5 x 1/2	6	7 7/8	A709-50WT2	2100	CVN 108

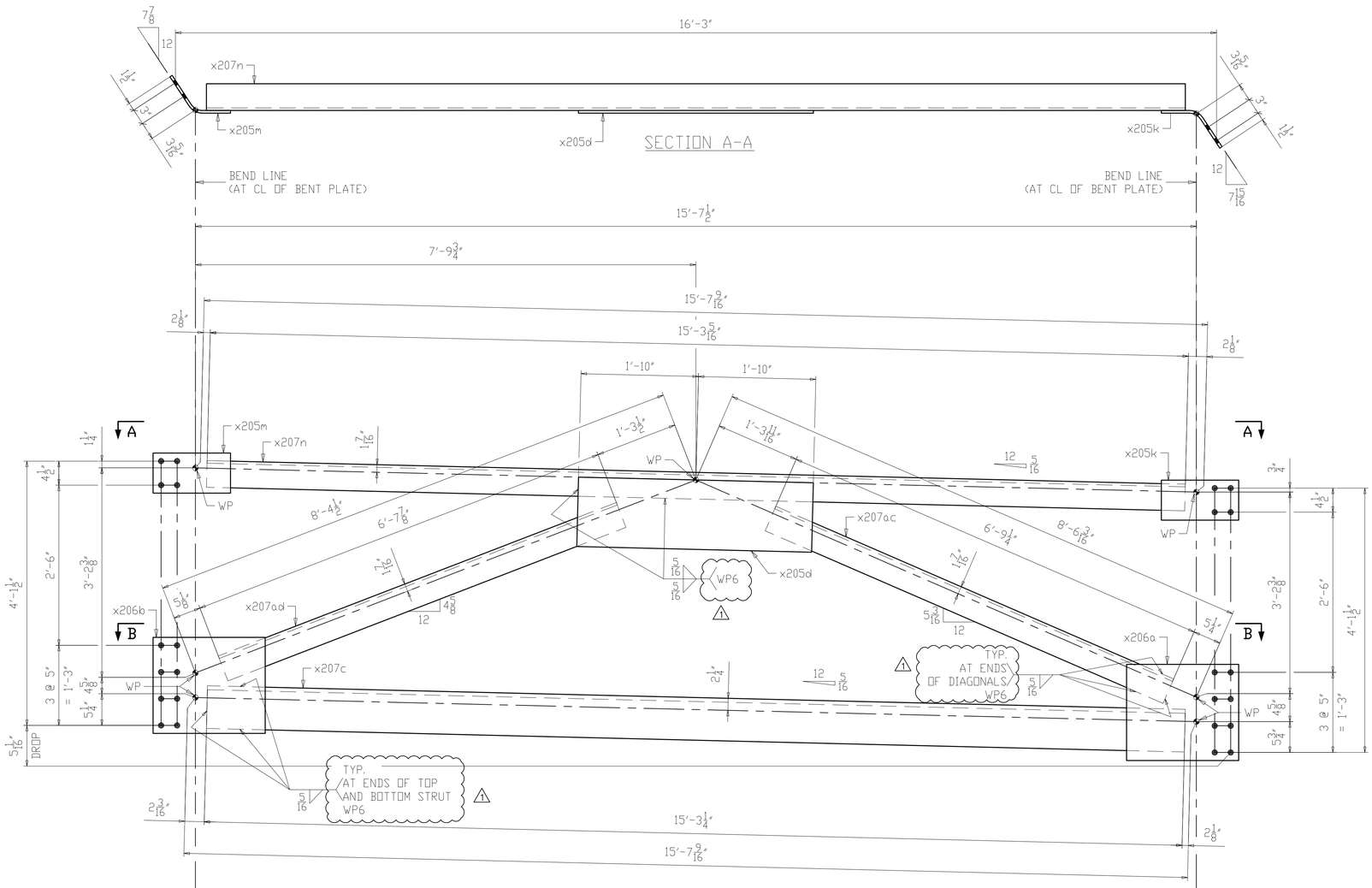

ONE ~ PIER K-FRAME ~ 229CF1
(PIER 1)

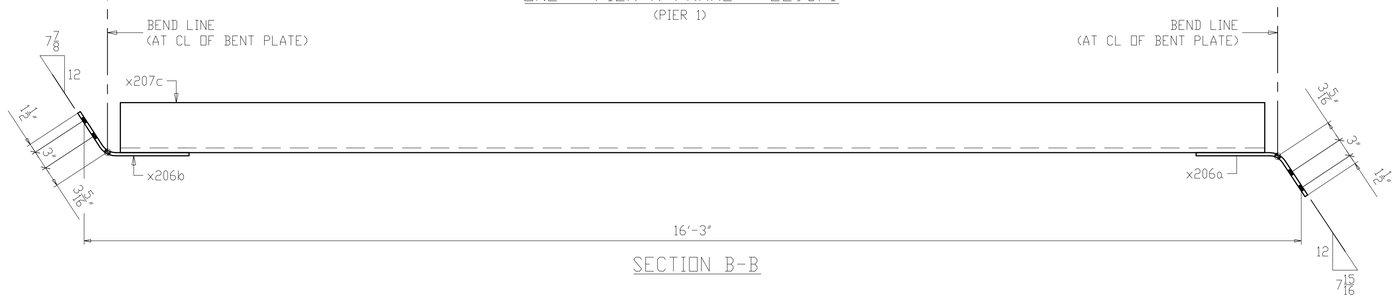

SECTION B-B

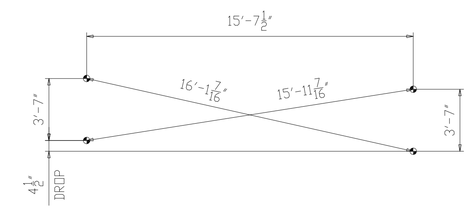

CROSS-CHECK DIAGRAM
(DIMENSIONS ARE GIVEN TO THE OUTERMOST WORKING POINTS)

NOTES:
1. FOR GENERAL NOTES SEE SHEET GN201.
2. ALL MATERIAL A709-50WT2 (UN).
3. T2 - DENOTES MATERIAL SUBJECT TO CHARPY V-NOTCH TESTING.
4. FOR K-FRAME STANDARD DETAILS SEE X205, X206 & X207.

NO.	DATE	REMARKS	BY
1	10/10/19	WELD PROCEDURE # ADDED	DP

REVISIONS

Veritas STEEL
2-EAU CLAIRE, WI 3-WAUSAU, WI 4-PALATKA, FL
IENCA 1605

STRUCTURE: CUY-010-1976L, OH-10 WESTBOUND OVER GCRTA BLUE AND GREEN LINES
LOCATION: CLEVELAND, OHIO CUYAHOGA COUNTY
PROJECT NO.: 17-3000
ENGINEER: MICHAEL BAKER INTERNATIONAL
CONTRACTOR: KOKOSING

ITEM: PIER 1 K-FRAME
SURFACE PREP.: SEE P201 OPEN HOLES: 1 1/16"Ø (U.N.O.)
PAINT: SEE P201

APPROVAL	DRAWN AM 06/11/19	SHEET NO.	PLANT	ORDER NO.
SHOP	CHECKED DP 07/10/19	229	3	317023A-37

LINE	SHIP MARK	NO. OF PCS.	ASS'Y MARK	MATERIAL SHAPE	LENGTH FT.	LENGTH IN.	MATERIAL SPEC.	ITEM NO.	REMARKS	
1	230CF1	ONE		PIER K-FRAME						1315
2		1	x205d	PL 1/2 x 13	3	8	A709-50WT2	2103	CVN	81
3		1	x206c	PL 1/2 x 7 1/2	1	2 1/2	A709-50WT2	2101	CVN BENT	15
4		1	x206d	PL 1/2 x 7 1/2	1	2 1/2	A709-50WT2	2101	CVN BENT	15
5		1	x206k	PL 1/2 x 18	1	9	A709-50WT2	2102	CVN BENT	54
6		1	x206m	PL 1/2 x 18	1	9	A709-50WT2	2102	CVN BENT	54
7		1	x207d	L8 x 8 x 3/4	15	10 1/8	A709-50WT2	2095	CVN	616
8		1	x207p	L5 x 5 x 1/2	15	10 3/16	A709-50WT2	2098	CVN	257
9		1	x207af	L5 x 5 x 1/2	6	11 3/16	A709-50WT2	2099	CVN	112
10		1	x207ag	L5 x 5 x 1/2	6	10 5/16	A709-50WT2	2099	CVN	111

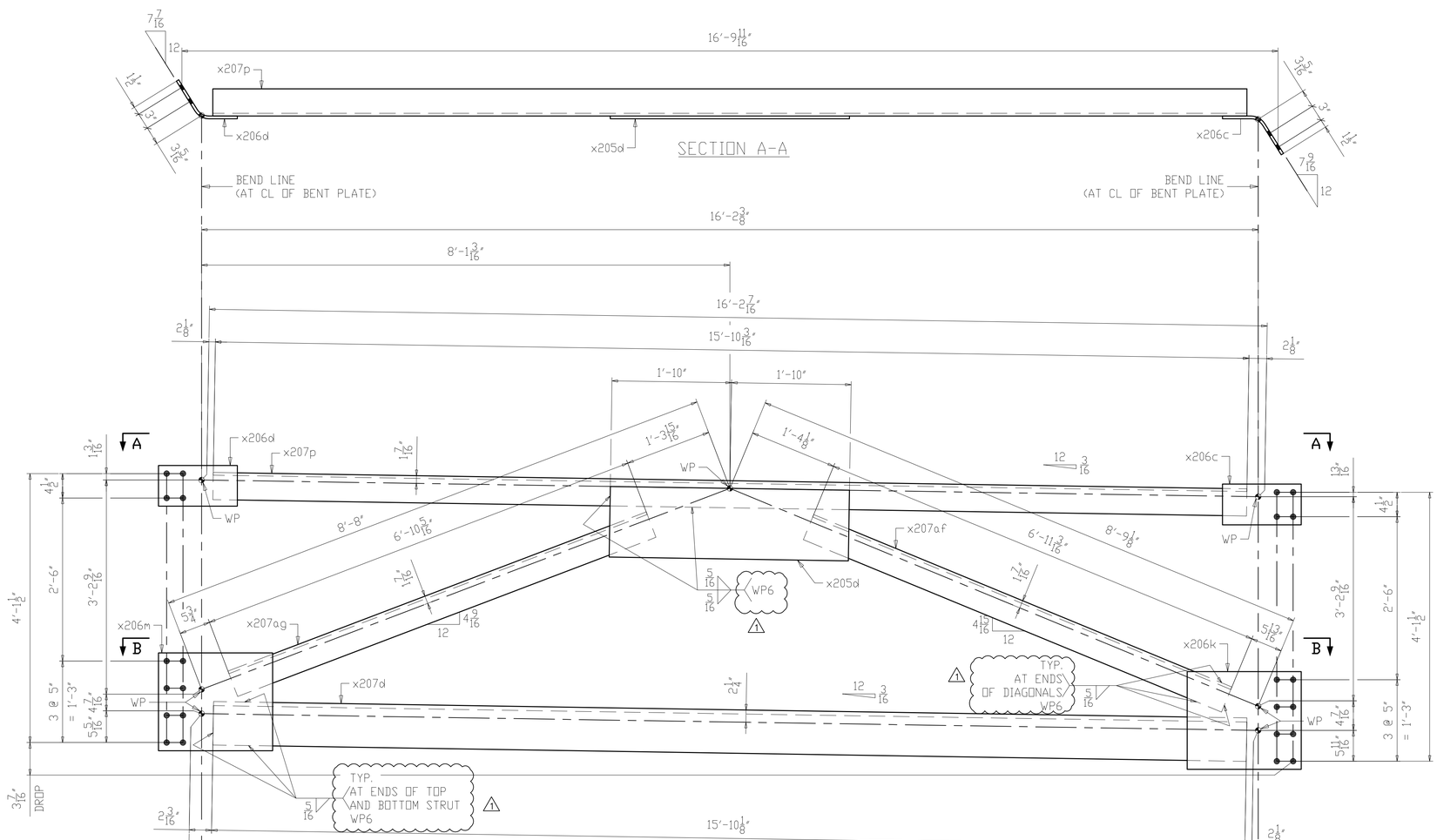

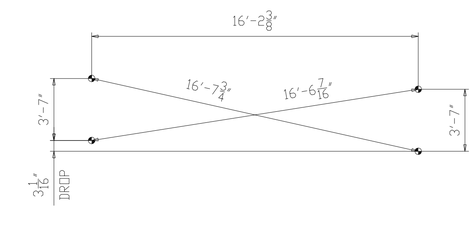

CROSS-CHECK DIAGRAM

(DIMENSIONS ARE GIVEN TO THE OUTERMOST WORKING POINTS)

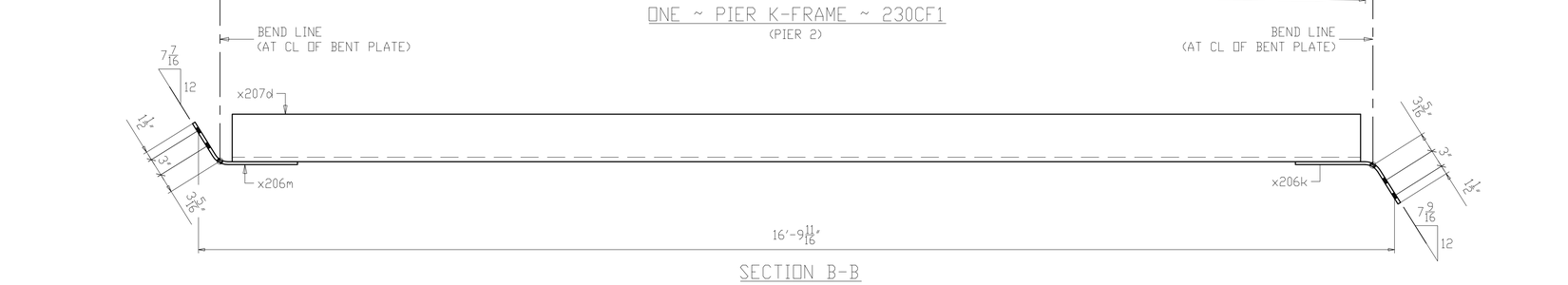

NOTES:
1. FOR GENERAL NOTES SEE SHEET GN201.
2. ALL MATERIAL A709-50WT2 (UN).
3. T2 - DENOTES MATERIAL SUBJECT TO CHARPY V-NOTCH TESTING.
4. FOR K-FRAME STANDARD DETAILS SEE X205, X206 & X207.

NO.	DATE	REMARKS	BY
1	10/10/19	WELD PROCEDURE # ADDED	DP

REVISIONS

Veritas STEEL
2-EAU CLAIRE, WI 3-WAUSAU, WI 4-PALATKA, FL
IENCA 1605

STRUCTURE	CUY-010-1976L, OH-10 WESTBOUND OVER GCRTA BLUE AND GREEN LINES
LOCATION	CLEVELAND, OHIO CUYAHOGA COUNTY
PROJECT NO.	17-3000
ENGINEER	MICHAEL BAKER INTERNATIONAL
CONTRACTOR	KOKOSING
ITEM	PIER 2 K-FRAME
SURFACE PREP.	SEE P201
OPEN HOLES	1 1/16"Ø (U.N.O.)
PAINT	SEE P201

APPROVAL	DRAWN AM 06/11/19	SHEET NO.	PLANT	ORDER NO.
SHOP	CHECKED DP 07/10/19	230	3	317023A-37

LINE	SHIP MARK	NO. OF PCS.	ASS'Y MARK	MATERIAL SHAPE	LENGTH FT.	LENGTH IN.	MATERIAL SPEC.	ITEM NO.	REMARKS
1	231CF1	ONE		PIER K-FRAME					1325
2		1	x205d	PL 1/2 x 13	3	8	A709-50WT2	2103	CVN 81
3		1	x206d	PL 1/2 x 7 1/2	1	2 1/2	A709-50WT2	2101	CVN BENT 15
4		1	x206f	PL 1/2 x 7 1/2	1	2 1/2	A709-50WT2	2101	CVN BENT 15
5		1	x206m	PL 1/2 x 18	1	9	A709-50WT2	2102	CVN BENT 54
6		1	x206n	PL 1/2 x 18	1	9	A709-50WT2	2102	CVN BENT 54
7		1	x207f	L8 x 8 x 3/4	15	11 15/16	A709-50WT2	2095	CVN 622
8		1	x207t	L5 x 5 x 1/2	16	0	A709-50WT2	2098	CVN 259
9		1	x207ak	L5 x 5 x 1/2	6	11 15/16	A709-50WT2	2099	CVN 113
10		1	x207am	L5 x 5 x 1/2	6	10 13/16	A709-50WT2	2099	CVN 112

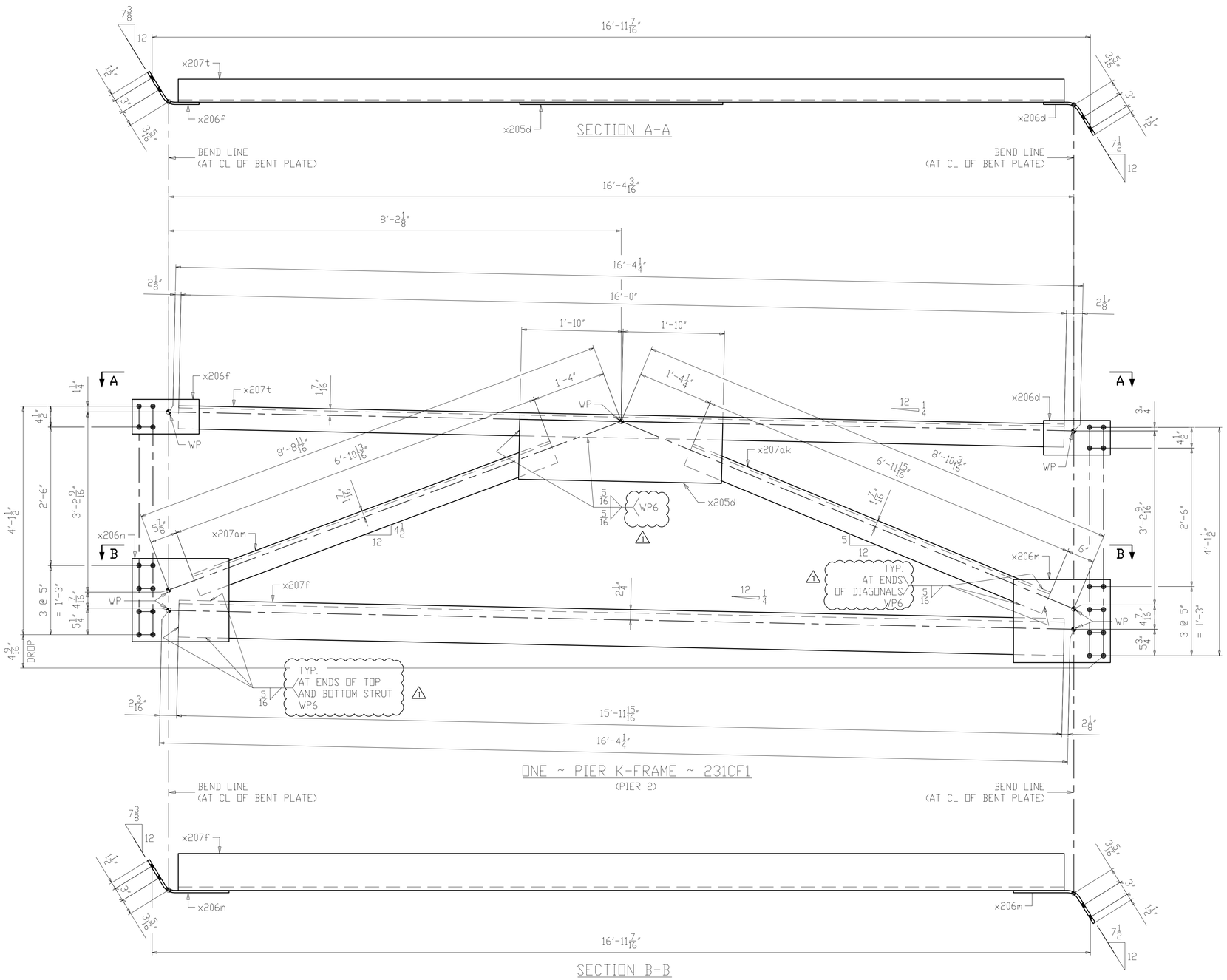

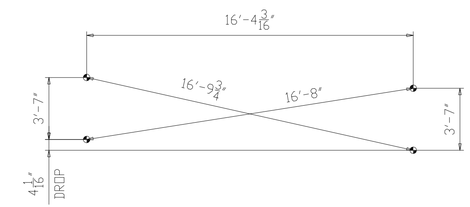

CROSS-CHECK DIAGRAM
(DIMENSIONS ARE GIVEN TO THE OUTERMOST WORKING POINTS)

NOTES:
1. FOR GENERAL NOTES SEE SHEET GN201.
2. ALL MATERIAL A709-50WT2 (UN).
3. T2 - DENOTES MATERIAL SUBJECT TO CHARPY V-NOTCH TESTING.
4. FOR K-FRAME STANDARD DETAILS SEE X205, X206 & X207.

NO.	DATE	REMARKS	BY
1	10/10/19	WELD PROCEDURE # ADDED	DP

REVISIONS

Veritas STEEL
2-EAU CLAIRE, WI 3-WAUSAU, WI 4-PALATKA, FL
IENCA 1605

STRUCTURE	CUY-010-1976L, OH-10 WESTBOUND OVER GCRTA BLUE AND GREEN LINES
LOCATION	CLEVELAND, OHIO CUYAHOGA COUNTY
PROJECT NO.	17-3000
ENGINEER	MICHAEL BAKER INTERNATIONAL
CONTRACTOR	KOKOSING
ITEM	PIER 2 K-FRAME
SURFACE PREP.	SEE P201 OPEN HOLES 1 1/16"Ø (U.N.O.)
PAINT	SEE P201

APPROVAL	DRAWN AM 06/11/19	SHEET NO.	PLANT	ORDER NO.
SHOP	CHECKED DP 07/10/19	231	3	317023A-37

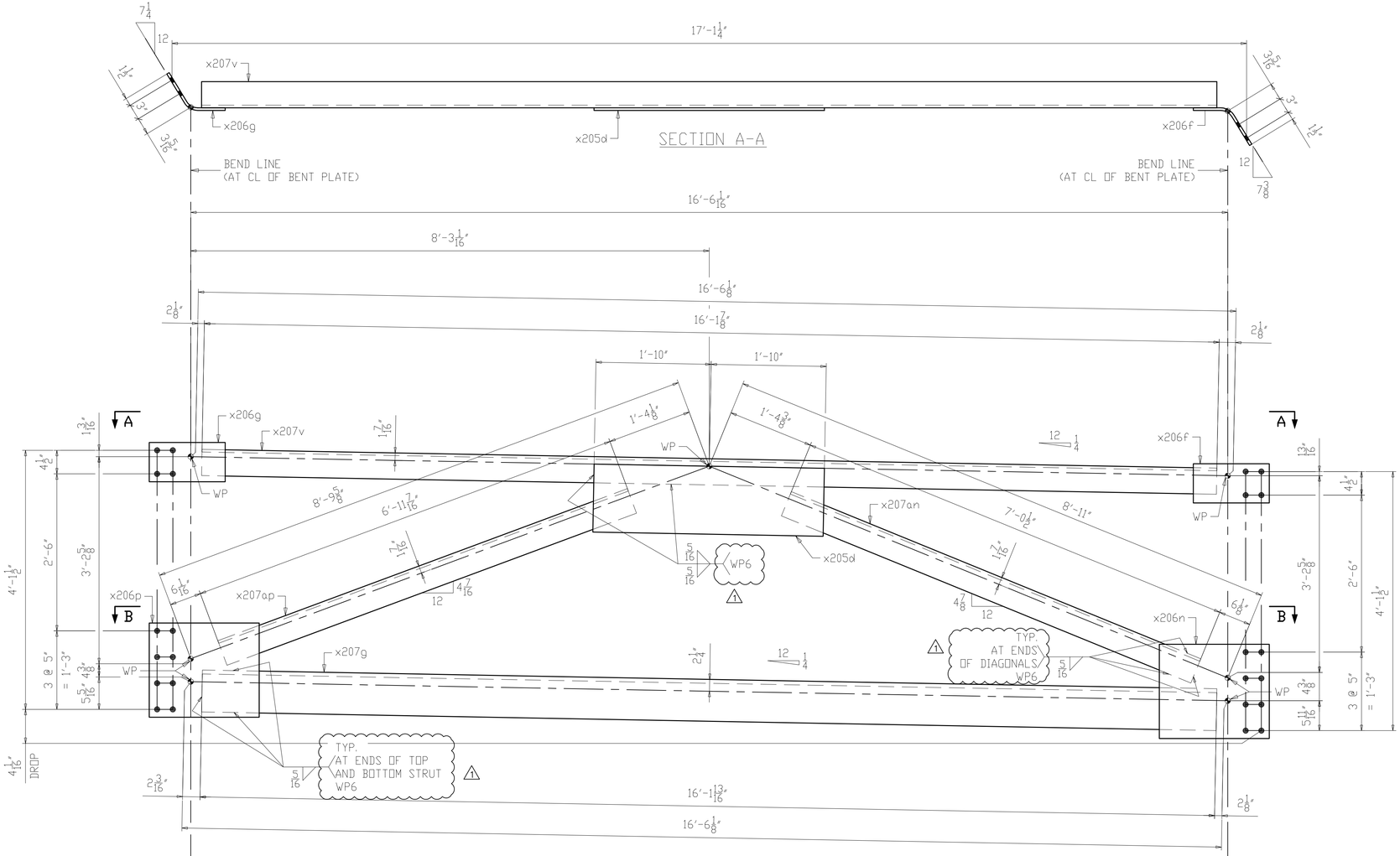

SECTION A-A

ONE ~ PIER K-FRAME ~ 232CF1

(PIER 2)

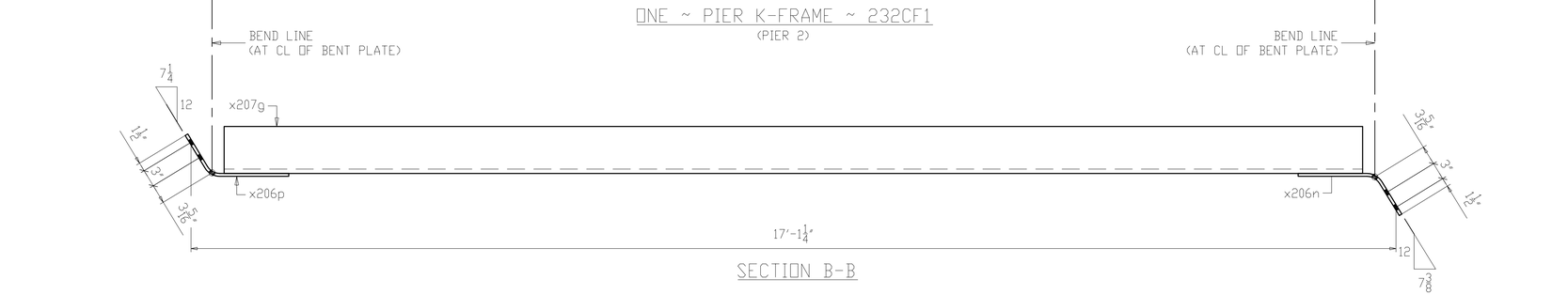

SECTION B-B

LINE	SHIP MARK	NO. OF PCS.	ASS'Y MARK	MATERIAL SHAPE	LENGTH FT.	LENGTH IN.	MATERIAL SPEC.	ITEM NO.	REMARKS
1	232CF1	ONE		PIER K-FRAME					1336
2		1	x205d	PL 1/2 x 13	3	8	A709-50WT2	2103	CVN 81
3		1	x206f	PL 1/2 x 7 1/2	1	2 1/2	A709-50WT2	2101	CVN BENT 15
4		1	x206g	PL 1/2 x 7 1/2	1	2 1/2	A709-50WT2	2101	CVN BENT 15
5		1	x206n	PL 1/2 x 18	1	9	A709-50WT2	2102	CVN BENT 54
6		1	x206p	PL 1/2 x 18	1	9	A709-50WT2	2102	CVN BENT 54
7		1	x207g	L8 x 8 x 3/4	16	1 13/16	A709-50WT2	2095	CVN 628
8		1	x207v	L5 x 5 x 1/2	16	1 7/8	A709-50WT2	2098	CVN 262
9		1	x207an	L5 x 5 x 1/2	7	0 1/2	A709-50WT2	2099	CVN 114
10		1	x207ap	L5 x 5 x 1/2	6	11 7/16	A709-50WT2	2099	CVN 113

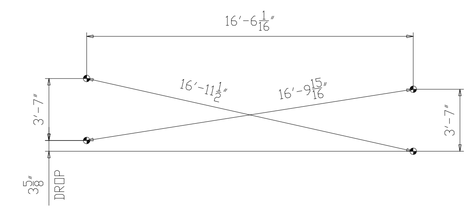

CROSS-CHECK DIAGRAM

(DIMENSIONS ARE GIVEN TO THE OUTERMOST WORKING POINTS)

NOTES:
1. FOR GENERAL NOTES SEE SHEET GN201.
2. ALL MATERIAL A709-50WT2 (UN).
3. T2 - DENOTES MATERIAL SUBJECT TO CHARPY V-NOTCH TESTING.
4. FOR K-FRAME STANDARD DETAILS SEE X205, X206 & X207.

NO.	DATE	REMARKS	BY
1	10/10/19	WELD PROCEDURE # ADDED	DP

REVISIONS

Veritas STEEL
2-EAU CLAIRE, WI 3-WAUSAU, WI 4-PALATKA, FL
TENCA 1605

STRUCTURE: CUY-010-1976L, OH-10 WESTBOUND OVER GCRTA BLUE AND GREEN LINES
LOCATION: CLEVELAND, OHIO CUYAHOGA COUNTY
PROJECT NO.: 17-3000
ENGINEER: MICHAEL BAKER INTERNATIONAL
CONTRACTOR: KOKOSING

ITEM: PIER 2 K-FRAME
SURFACE PREP.: SEE P201 OPEN HOLES: 1 1/16"ø (U.N.O.)
PAINT: SEE P201

APPROVAL	DRAWN AM 06/11/19	SHEET NO.	PLANT	ORDER NO.
SHOP	CHECKED DP 07/10/19	232	3	317023A-37

LINE	SHIP MARK	NO. OF PCS.	ASS'Y MARK	MATERIAL SHAPE	LENGTH FT.	LENGTH IN.	MATERIAL SPEC.	ITEM NO.	REMARKS	
1	233CF1	6		INTERMEDIATE K-FRAME						4058
2		12	x208a	PL 1/2 x 6 1/2	1	0 1/2	A709-50WT2	2107	CVN	138
3		12	x208b	PL 1/2 x 16 7/8	1	5 1/2	A709-50WT2	2108	CVN	502
4		6	x208c	PL 1/2 x 11	2	2	A709-50WT2	2109	CVN	243
5		6	x208d	L6 x 6 x 7/8	8	11 1/4	A709-50WT2	2104	CVN	1775
6		6	x208k	L4 x 4 x 1/2	8	11 5/16	A709-50WT2	2105	CVN	687
7		6	x208n	L4 x 4 x 1/2	4	7	A709-50WT2	2106	CVN	352
8		6	x208bb	L4 x 4 x 1/2	4	8 3/8	A709-50WT2	2106	CVN	361

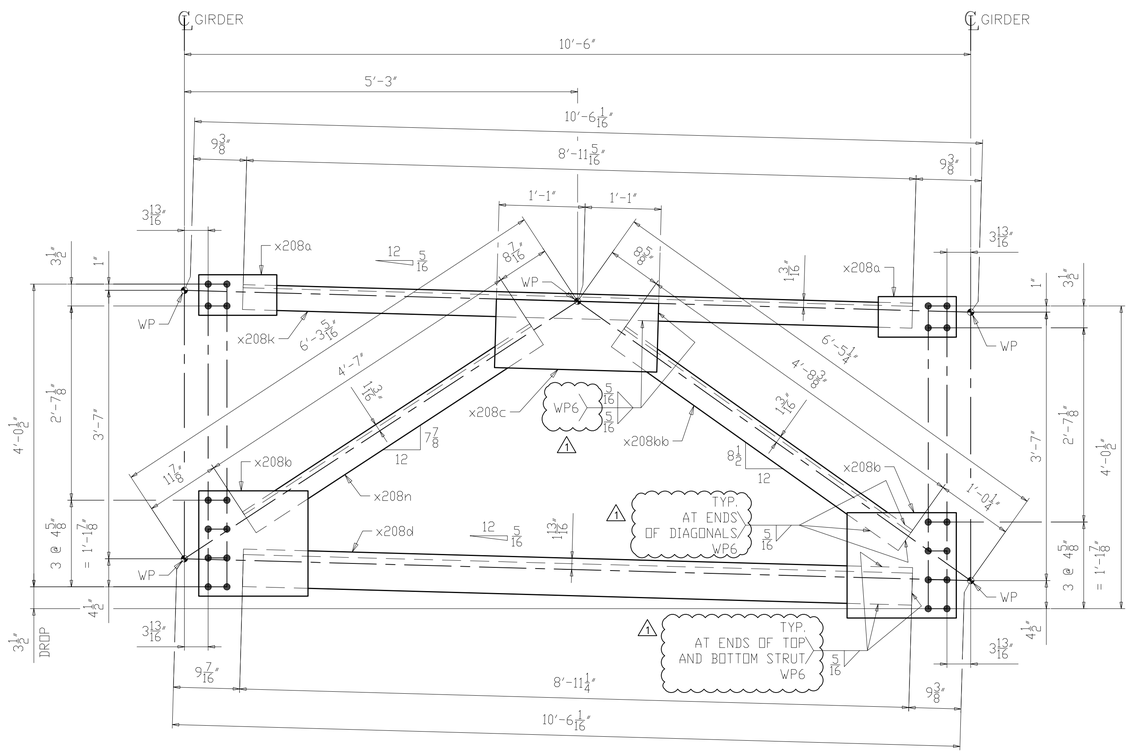

6 ~ INTERMEDIATE K-FRAME ~ 233CF1

(SPAN 2)

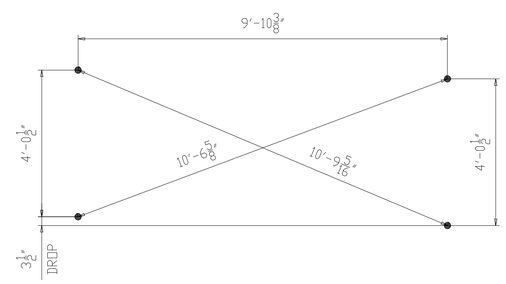

CROSS-CHECK DIAGRAM

(DIMENSIONS ARE GIVEN TO THE OUTERMOST HOLES)

NOTES:
1. FOR GENERAL NOTES SEE SHEET GN201.
2. ALL MATERIAL A709-50WT2 (UN).
3. T2 - DENOTES MATERIAL SUBJECT TO CHARPY V-NOTCH TESTING.
4. FOR K-FRAME STANDARD DETAILS SEE X208.

NO.	DATE	REMARKS	BY
1	10/10/19	WELD PROCEDURE # ADDED	DP

REVISIONS

Veritas STEEL
2-EAU CLAIRE, WI 3-WAUSAU, WI 4-PALATKA, FL
IENCA 1605

STRUCTURE: CUY-010-1976L, OH-10 WESTBOUND OVER GCRTA BLUE AND GREEN LINES
LOCATION: CLEVELAND, OHIO CUYAHOGA COUNTY
PROJECT NO.: 17-3000
ENGINEER: MICHAEL BAKER INTERNATIONAL
CONTRACTOR: KOKOSING

ITEM: INTERMEDIATE K-FRAME
SURFACE PREP.: SEE P201 OPEN HOLES: 1 1/16"Ø (U.N.O.)
PAINT: SEE P201

APPROVAL	DRAWN AM 06/11/19	SHEET NO.	PLANT	ORDER NO.
SHOP	CHECKED SA 07/10/19	233	3	317023A-37

LINE	SHIP MARK	NO. OF PCS.	ASS'Y MARK	MATERIAL SHAPE	LENGTH FT.	LENGTH IN.	MATERIAL SPEC.	ITEM NO.	REMARKS	
1	234CF1	4		INTERMEDIATE K-FRAME						2705
2		8	x208a	PL 1/2 x 6 1/2	1	0 1/2	A709-50WT2	2107	CVN	92
3		8	x208b	PL 1/2 x 16 7/8	1	5 1/2	A709-50WT2	2108	CVN	335
4		4	x208c	PL 1/2 x 11	2	2	A709-50WT2	2109	CVN	162
5		4	x208d	L6 x 6 x 7/8	8	11 1/4	A709-50WT2	2104	CVN	1183
6		4	x208k	L4 x 4 x 1/2	8	11 5/16	A709-50WT2	2105	CVN	458
7		4	x208p	L4 x 4 x 1/2	4	7 1/16	A709-50WT2	2106	CVN	235
8		4	x208ba	L4 x 4 x 1/2	4	8 5/16	A709-50WT2	2106	CVN	240

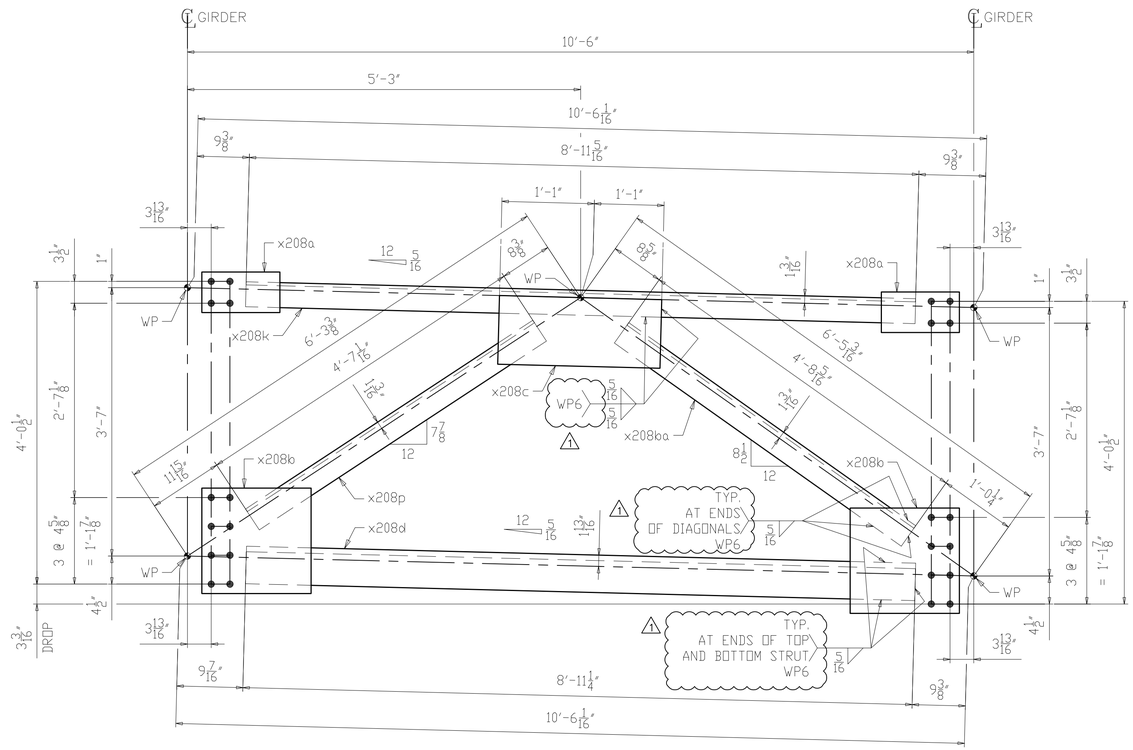

4 ~ INTERMEDIATE K-FRAME ~ 234CF1
(SPAN 1 & 2)

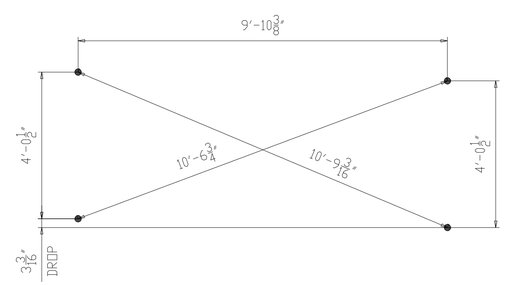

CROSS-CHECK DIAGRAM
(DIMENSIONS ARE GIVEN TO THE OUTERMOST HOLES)

NOTES:
1. FOR GENERAL NOTES SEE SHEET GN201.
2. ALL MATERIAL A709-50WT2 (UN).
3. T2 - DENOTES MATERIAL SUBJECT TO CHARPY V-NOTCH TESTING.
4. FOR K-FRAME STANDARD DETAILS SEE X208.

NO.	DATE	REMARKS	BY
1	10/10/19	WELD PROCEDURE # ADDED	DP

REVISIONS

Veritas STEEL
2-EAU CLAIRE, WI 3-WAUSAU, WI 4-PALATKA, FL
IENCA 1605

STRUCTURE	CUY-010-1976L, OH-10 WESTBOUND OVER GCRTA BLUE AND GREEN LINES
LOCATION	CLEVELAND, OHIO CUYAHOGA COUNTY
PROJECT NO.	17-3000
ENGINEER	MICHAEL BAKER INTERNATIONAL
CONTRACTOR	KOKOSING
ITEM	INTERMEDIATE K-FRAME
SURFACE PREP.	SEE P201
OPEN HOLES	1 1/16"Ø (U.N.O.)
PAINT	SEE P201

APPROVAL	DRAWN AM 06/11/19	SHEET NO.	PLANT	ORDER NO.
SHOP	CHECKED SA 07/10/19	234	3	317023A-37

LINE	SHIP MARK	NO. OF PCS.	ASS'Y MARK	MATERIAL SHAPE	LENGTH FT.	LENGTH IN.	MATERIAL SPEC.	ITEM NO.	REMARKS	
1	235CF1	6		INTERMEDIATE K-FRAME						4058
2		12	x208a	PL 1/2 x 6 1/2	1	0 1/2	A709-50WT2	2107	CVN	138
3		12	x208b	PL 1/2 x 16 7/8	1	5 1/2	A709-50WT2	2108	CVN	502
4		6	x208c	PL 1/2 x 11	2	2	A709-50WT2	2109	CVN	243
5		6	x208d	L6 x 6 x 7/8	8	11 1/4	A709-50WT2	2104	CVN	1775
6		6	x208k	L4 x 4 x 1/2	8	11 5/16	A709-50WT2	2105	CVN	687
7		6	x208t	L4 x 4 x 1/2	4	7 1/8	A709-50WT2	2106	CVN	353
8		6	x208ay	L4 x 4 x 1/2	4	8 1/4	A709-50WT2	2106	CVN	360

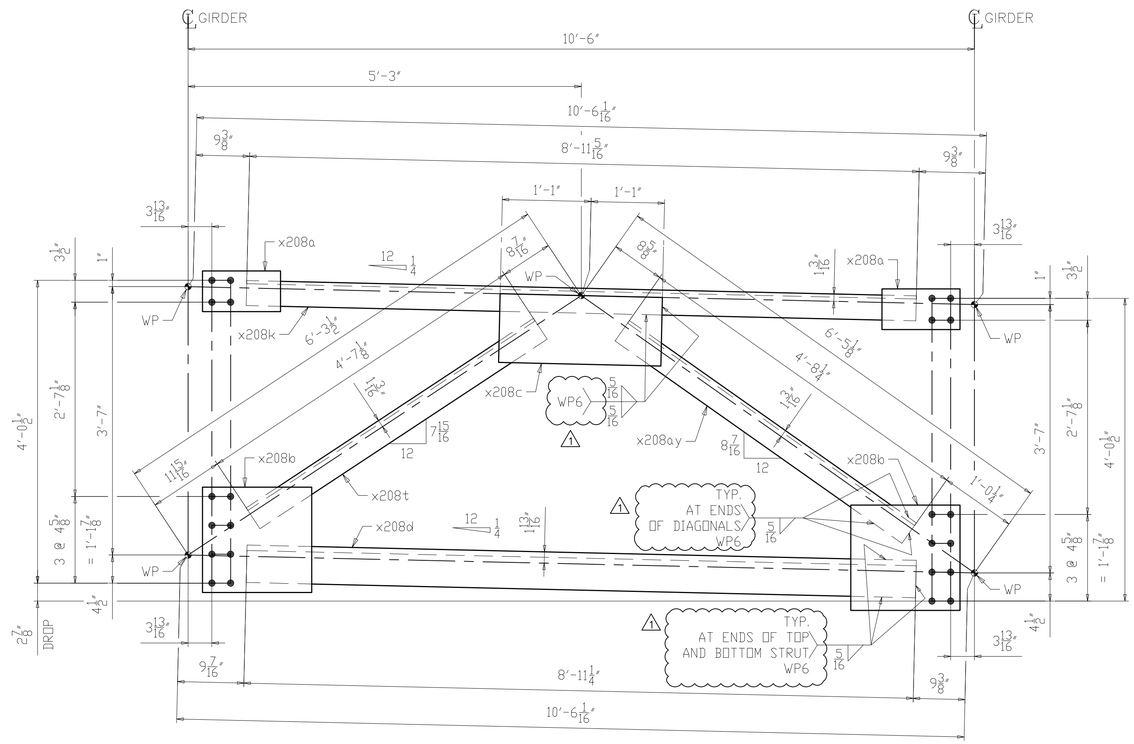

6 ~ INTERMEDIATE K-FRAME ~ 235CF1
(SPAN 1 & 2)

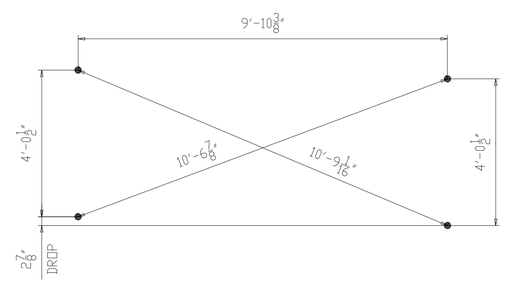

CROSS-CHECK DIAGRAM
(DIMENSIONS ARE GIVEN TO THE OUTERMOST HOLES)

NOTES:
1. FOR GENERAL NOTES SEE SHEET GN201.
2. ALL MATERIAL A709-50WT2 (UN).
3. T2 - DENOTES MATERIAL SUBJECT TO CHARPY V-NOTCH TESTING.
4. FOR K-FRAME STANDARD DETAILS SEE X208.

NO.	DATE	REMARKS	BY
1	10/10/19	WELD PROCEDURE # ADDED	DP

REVISIONS

Veritas STEEL
2-EAU CLAIRE, WI 3-WAUSAU, WI 4-PALATKA, FL
IAS 1605

STRUCTURE: CUY-010-1976L, OH-10 WESTBOUND OVER GCRTA BLUE AND GREEN LINES
LOCATION: CLEVELAND, OHIO CUYAHOGA COUNTY
PROJECT NO.: 17-3000
ENGINEER: MICHAEL BAKER INTERNATIONAL
CONTRACTOR: KOKOSING

ITEM: INTERMEDIATE K-FRAME
SURFACE PREP.: SEE P201 OPEN HOLES: 1 1/16"Ø (U.N.O.)
PAINT: SEE P201

APPROVAL	DRAWN AM 06/11/19	SHEET NO.	PLANT	ORDER NO.
SHOP	CHECKED SA 07/10/19	235	3	317023A-37

LINE	SHIP MARK	NO. OF PCS.	ASS'Y MARK	MATERIAL SHAPE	LENGTH FT.	LENGTH IN.	MATERIAL SPEC.	ITEM NO.	REMARKS
1	236CF1	9		INTERMEDIATE K-FRAME					NOT PAINTED 6086
2		18	x208a	PL 1/2 x 6 1/2	1	0 1/2	A709-50WT2	2107	CVN 207
3		18	x208b	PL 1/2 x 16 7/8	1	5 1/2	A709-50WT2	2108	CVN 753
4		9	x208c	PL 1/2 x 11	2	2	A709-50WT2	2109	CVN 365
5		9	x208d	L6 x 6 x 7/8	8	11 1/4	A709-50WT2	2104	CVN 2662
6		9	x208k	L4 x 4 x 1/2	8	11 5/16	A709-50WT2	2105	CVN 1030
7		9	x208v	L4 x 4 x 1/2	4	7 3/16	A709-50WT2	2106	CVN 530
8		9	x208aw	L4 x 4 x 1/2	4	8 3/16	A709-50WT2	2106	CVN 539
9									
10	236CF1P	1		INTERMEDIATE K-FRAME					PAINTED 677
11		2	x208a	PL 1/2 x 6 1/2	1	0 1/2	A709-50WT2	2107	CVN 23
12		2	x208b	PL 1/2 x 16 7/8	1	5 1/2	A709-50WT2	2108	CVN 84
13		1	x208c	PL 1/2 x 11	2	2	A709-50WT2	2109	CVN 41
14		1	x208d	L6 x 6 x 7/8	8	11 1/4	A709-50WT2	2104	CVN 296
15		1	x208k	L4 x 4 x 1/2	8	11 5/16	A709-50WT2	2105	CVN 114
16		1	x208v	L4 x 4 x 1/2	4	7 3/16	A709-50WT2	2106	CVN 59
17		1	x208aw	L4 x 4 x 1/2	4	8 3/16	A709-50WT2	2106	CVN 60

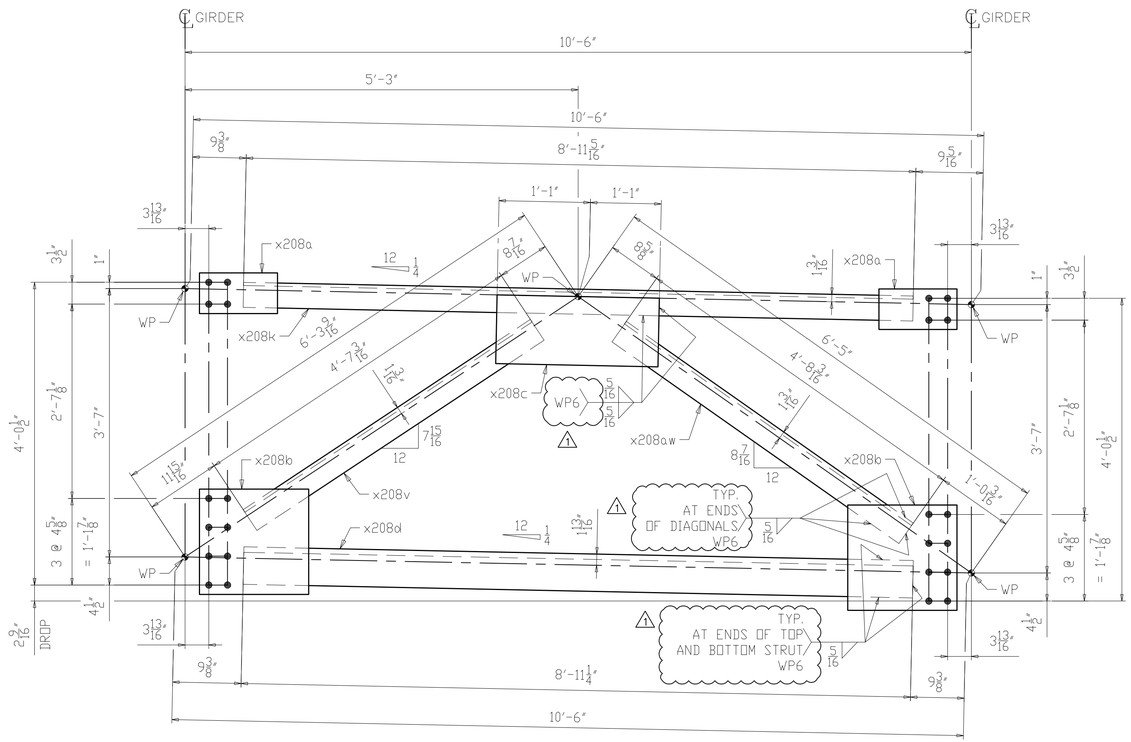

9 ~ INTERMEDIATE K-FRAME ~ 236CF1
(SPAN 1 & 3 - NOT PAINTED)

1 ~ INTERMEDIATE K-FRAME ~ 236CF1P
(SPAN 3 - PAINTED)

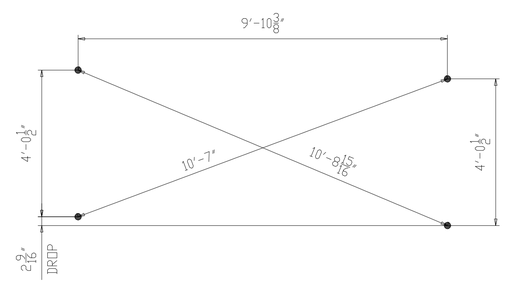

CROSS-CHECK DIAGRAM
(DIMENSIONS ARE GIVEN TO THE OUTERMOST HOLES)

NOTES:
1. FOR GENERAL NOTES SEE SHEET GN201.
2. ALL MATERIAL A709-50WT2 (UN).
3. T2 - DENOTES MATERIAL SUBJECT TO CHARPY V-NOTCH TESTING.
4. FOR K-FRAME STANDARD DETAILS SEE X208.

NO.	DATE	REMARKS	BY
1	10/10/19	AS PER APPROVAL COMMENTS / WP # ADDED	DP

REVISIONS

Veritas STEEL
2-EAU CLAIRE, WI 3-WAUSAU, WI 4-PALATKA, FL
IAS 1605

STRUCTURE: CUY-010-1976L, OH-10 WESTBOUND OVER GCRTA BLUE AND GREEN LINES
LOCATION: CLEVELAND, OHIO CUYAHOGA COUNTY
PROJECT NO.: 17-3000
ENGINEER: MICHAEL BAKER INTERNATIONAL
CONTRACTOR: KOKOSING

ITEM: INTERMEDIATE K-FRAME
SURFACE PREP.: SEE P201 OPEN HOLES: 1 1/16"Ø (U.N.O.)
PAINT: SEE P201

APPROVAL	DRAWN AM 06/11/19	SHEET NO.	PLANT	ORDER NO.
SHOP	CHECKED SA 07/10/19	236	3	317023A-37

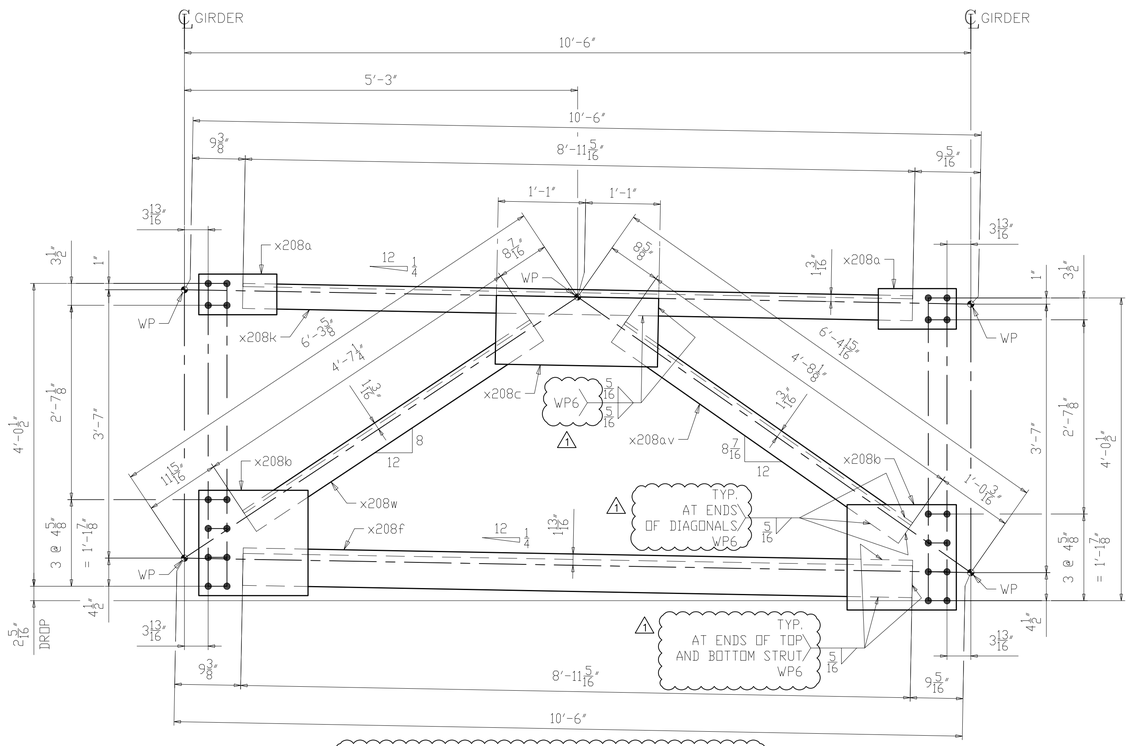

5 ~ INTERMEDIATE K-FRAME ~ 237CF1
(SPAN 2 & 3 - NOT PAINTED)

1 ~ INTERMEDIATE K-FRAME ~ 237CF1P
(SPAN 1 - PAINTED)

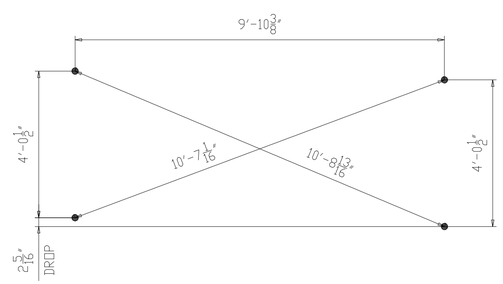

CROSS-CHECK DIAGRAM
(DIMENSIONS ARE GIVEN TO THE OUTERMOST HOLES)

LINE	SHIP MARK	NO. OF PCS.	ASS'Y MARK	MATERIAL SHAPE	LENGTH FT.	LENGTH IN.	MATERIAL SPEC.	ITEM NO.	REMARKS
1	237CF1	5		INTERMEDIATE K-FRAME					NOT PAINTED 3382
2		10	x208a	PL 1/2 x 6 1/2	1	0 1/2	A709-50WT2	2107	CVN 115
3		10	x208b	PL 1/2 x 16 7/8	1	5 1/2	A709-50WT2	2108	CVN 418
4		5	x208c	PL 1/2 x 11	2	2	A709-50WT2	2109	CVN 203
5		5	x208f	L6 x 6 x 7/8	8	11 5/16	A709-50WT2	2104	CVN 1480
6		5	x208k	L4 x 4 x 1/2	8	11 5/16	A709-50WT2	2105	CVN 572
7		5	x208w	L4 x 4 x 1/2	4	7 1/4	A709-50WT2	2106	CVN 295
8		5	x208a.v	L4 x 4 x 1/2	4	8 1/8	A709-50WT2	2106	CVN 299
9									
10	237CF1P	1		INTERMEDIATE K-FRAME					PAINTED 677
11		2	x208a	PL 1/2 x 6 1/2	1	0 1/2	A709-50WT2	2107	CVN 23
12		2	x208b	PL 1/2 x 16 7/8	1	5 1/2	A709-50WT2	2108	CVN 84
13		1	x208c	PL 1/2 x 11	2	2	A709-50WT2	2109	CVN 41
14		1	x208f	L6 x 6 x 7/8	8	11 5/16	A709-50WT2	2104	CVN 296
15		1	x208k	L4 x 4 x 1/2	8	11 5/16	A709-50WT2	2105	CVN 114
16		1	x208w	L4 x 4 x 1/2	4	7 1/4	A709-50WT2	2106	CVN 59
17		1	x208a.v	L4 x 4 x 1/2	4	8 1/8	A709-50WT2	2106	CVN 60

NOTES:
1. FOR GENERAL NOTES SEE SHEET GN201.
2. ALL MATERIAL A709-50WT2 (UN).
3. T2 - DENOTES MATERIAL SUBJECT TO CHARPY V-NOTCH TESTING.
4. FOR K-FRAME STANDARD DETAILS SEE X208.

NO.	DATE	REMARKS	BY
1	10/10/19	AS PER APPROVAL COMMENTS / WP # ADDED	DP

REVISIONS

Veritas STEEL
2-EAU CLAIRE, WI 3-WAUSAU, WI 4-PALATKA, FL
IENCA 1605

STRUCTURE: CUY-010-1976L, OH-10 WESTBOUND OVER GCRTA BLUE AND GREEN LINES
LOCATION: CLEVELAND, OHIO CUYAHOGA COUNTY
PROJECT NO.: 17-3000
ENGINEER: MICHAEL BAKER INTERNATIONAL
CONTRACTOR: KOKOSING

ITEM: INTERMEDIATE K-FRAME
SURFACE PREP.: SEE P201 OPEN HOLES: 1 1/16"Ø (U.N.O.)
PAINT: SEE P201

APPROVAL	DRAWN AM 06/11/19	SHEET NO.	PLANT	ORDER NO.
SHOP	CHECKED SA 07/10/19	237	3	317023A-37

LINE	SHIP MARK	NO. OF PCS.	ASS'Y MARK	MATERIAL SHAPE	LENGTH FT.	LENGTH IN.	MATERIAL SPEC.	ITEM NO.	REMARKS	
1	238CF1	2		INTERMEDIATE K-FRAME						1353
2		4	x208a	PL 1/2 x 6 1/2	1	0 1/2	A709-50WT2	2107	CVN	46
3		4	x208b	PL 1/2 x 16 7/8	1	5 1/2	A709-50WT2	2108	CVN	167
4		2	x208c	PL 1/2 x 11	2	2	A709-50WT2	2109	CVN	81
5		2	x208f	L6 x 6 x 7/8	8	11 5/16	A709-50WT2	2104	CVN	592
6		2	x208k	L4 x 4 x 1/2	8	11 5/16	A709-50WT2	2105	CVN	229
7		2	x208y	L4 x 4 x 1/2	4	7 5/16	A709-50WT2	2106	CVN	118
8		2	x208at	L4 x 4 x 1/2	4	8 1/16	A709-50WT2	2106	CVN	120

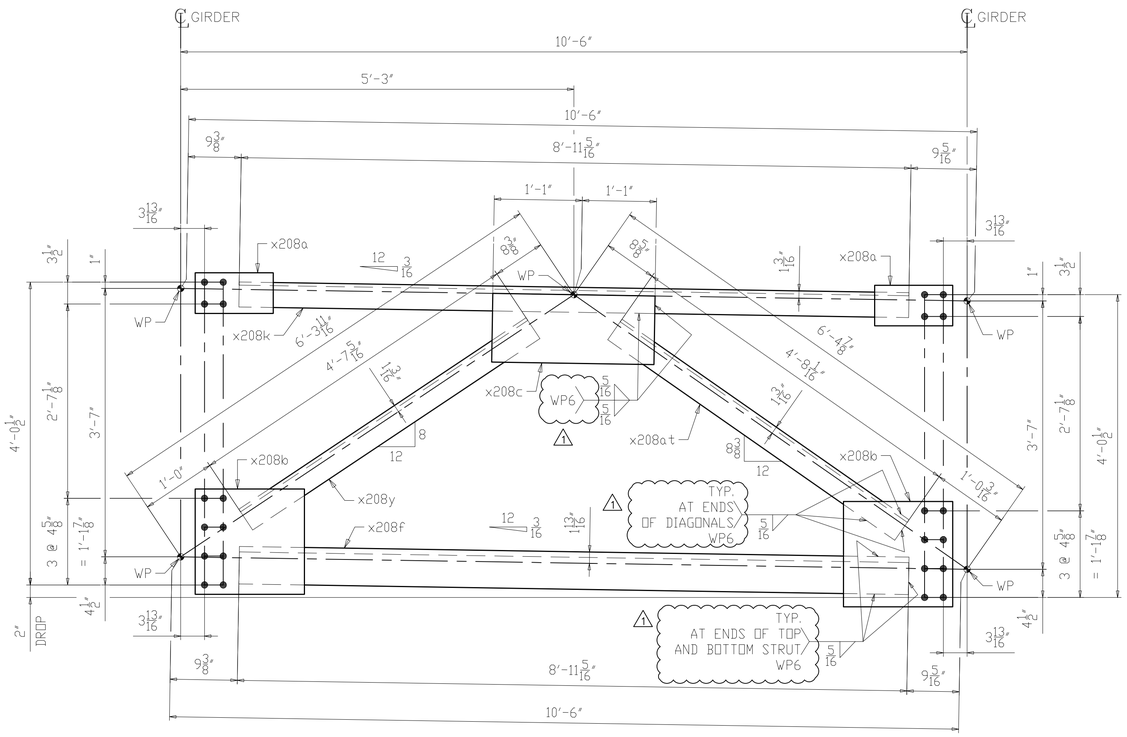

2 ~ INTERMEDIATE K-FRAME ~ 238CF1

(SPAN 2)

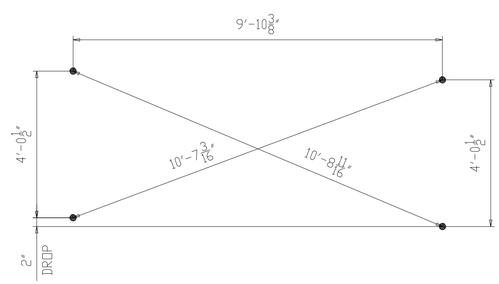

CROSS-CHECK DIAGRAM

(DIMENSIONS ARE GIVEN TO THE OUTERMOST HOLES)

NOTES:

1. FOR GENERAL NOTES SEE SHEET GN201.
2. ALL MATERIAL A709-50WT2 (UN).
3. T2 - DENOTES MATERIAL SUBJECT TO CHARPY V-NOTCH TESTING.
4. FOR K-FRAME STANDARD DETAILS SEE X208.

NO.	DATE	REMARKS	BY
1	10/10/19	WELD PROCEDURE # ADDED	DP

REVISIONS

Veritas STEEL

2-EAU CLAIRE, WI 3-WAUSAU, WI 4-PALATKA, FL

IAS 1605

STRUCTURE	CUY-010-1976L, OH-10 WESTBOUND OVER GCRTA BLUE AND GREEN LINES
LOCATION	CLEVELAND, OHIO CUYAHOGA COUNTY
PROJECT NO.	17-3000
ENGINEER	MICHAEL BAKER INTERNATIONAL
CONTRACTOR	KOKOSING
ITEM	INTERMEDIATE K-FRAME
SURFACE PREP.	SEE P201
OPEN HOLES	1 1/16"Ø (U.N.O.)
PAINT	SEE P201

APPROVAL	DRAWN AM 06/11/19	SHEET NO.	PLANT	ORDER NO.
SHOP	CHECKED SA 07/10/19	238	3	317023A-37

LINE	SHIP MARK	NO. OF PCS.	ASS'Y MARK	MATERIAL SHAPE	LENGTH FT.	LENGTH IN.	MATERIAL SPEC.	ITEM NO.	REMARKS	
1	239CF1	8		INTERMEDIATE K-FRAME						5412
2		16	x208a	PL 1/2 x 6 1/2	1	0 1/2	A709-50WT2	2107	CVN	184
3		16	x208b	PL 1/2 x 16 7/8	1	5 1/2	A709-50WT2	2108	CVN	669
4		8	x208c	PL 1/2 x 11	2	2	A709-50WT2	2109	CVN	324
5		8	x208f	L6 x 6 x 7/8	8	11 5/16	A709-50WT2	2104	CVN	2368
6		8	x208k	L4 x 4 x 1/2	8	11 5/16	A709-50WT2	2105	CVN	916
7		8	x208aa	L4 x 4 x 1/2	4	7 3/8	A709-50WT2	2106	CVN	473
8		8	x208ap	L4 x 4 x 1/2	4	8	A709-50WT2	2106	CVN	478

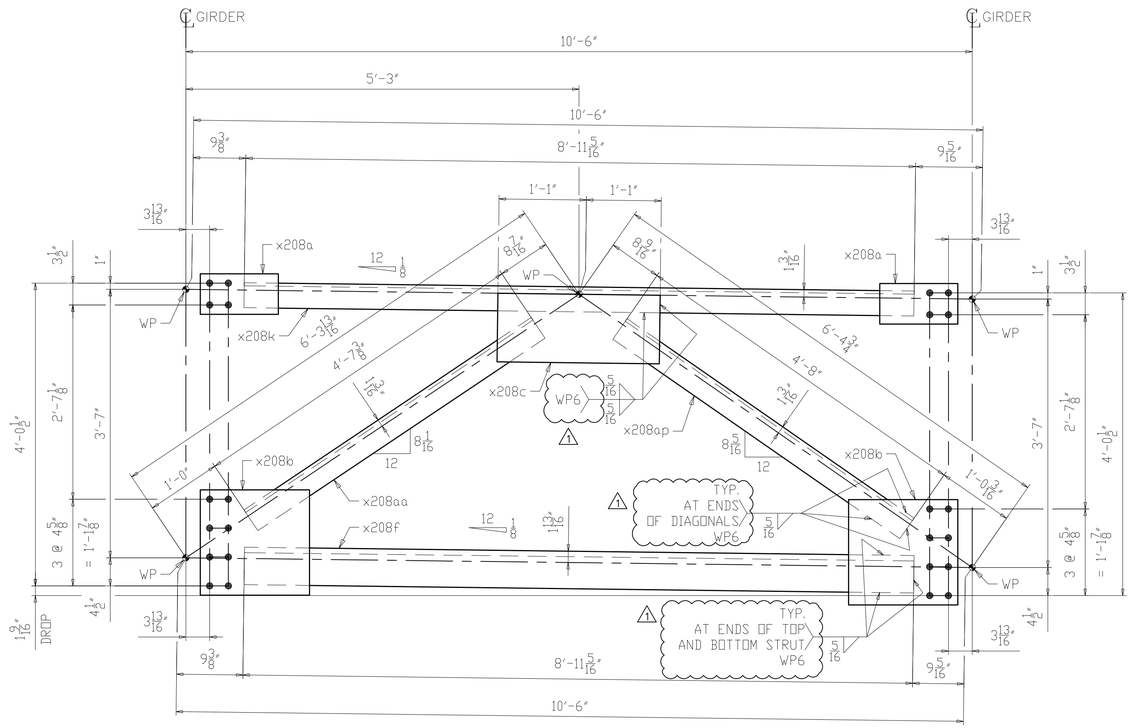

8 ~ INTERMEDIATE K-FRAME ~ 239CF1

(SPAN 2)

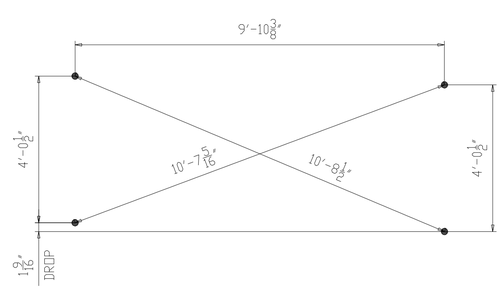

CROSS-CHECK DIAGRAM

(DIMENSIONS ARE GIVEN TO THE OUTERMOST HOLES)

NOTES:
1. FOR GENERAL NOTES SEE SHEET GN201.
2. ALL MATERIAL A709-50WT2 (UN).
3. T2 - DENOTES MATERIAL SUBJECT TO CHARPY V-NOTCH TESTING.
4. FOR K-FRAME STANDARD DETAILS SEE X208.

NO.	DATE	REMARKS	BY
1	10/10/19	WELD PROCEDURE # ADDED	DP

REVISIONS

Veritas STEEL
2-EAU CLAIRE, WI 3-WAUSAU, WI 4-PALATKA, FL

STRUCTURE	CUY-010-1976L, OH-10 WESTBOUND OVER GCRTA BLUE AND GREEN LINES
LOCATION	CLEVELAND, OHIO CUYAHOGA COUNTY
PROJECT NO.	17-3000
ENGINEER	MICHAEL BAKER INTERNATIONAL
CONTRACTOR	KOKOSING
ITEM	INTERMEDIATE K-FRAME
SURFACE PREP.	SEE P201
OPEN HOLES	1 1/16"Ø (U.N.O.)
PAINT	SEE P201

APPROVAL	DRAWN AM 06/11/19	SHEET NO.	PLANT	ORDER NO.
SHOP	CHECKED SA 07/10/19	239	3	317023A-37

LINE	SHIP MARK	NO. OF PCS.	ASS'Y MARK	MATERIAL SHAPE	LENGTH FT.	LENGTH IN.	MATERIAL SPEC.	ITEM NO.	REMARKS	
1	240CF1	8		INTERMEDIATE K-FRAME						5411
2		16	x208a	PL 1/2 x 6 1/2	1	0 1/2	A709-50WT2	2107	CVN	184
3		16	x208b	PL 1/2 x 16 7/8	1	5 1/2	A709-50WT2	2108	CVN	669
4		8	x208c	PL 1/2 x 11	2	2	A709-50WT2	2109	CVN	324
5		8	x208f	L6 x 6 x 7/8	8	11 5/16	A709-50WT2	2104	CVN	2368
6		8	x208k	L4 x 4 x 1/2	8	11 5/16	A709-50WT2	2105	CVN	916
7		8	x208ab	L4 x 4 x 1/2	4	7 7/16	A709-50WT2	2106	CVN	473
8		8	x208an	L4 x 4 x 1/2	4	7 15/16	A709-50WT2	2106	CVN	477

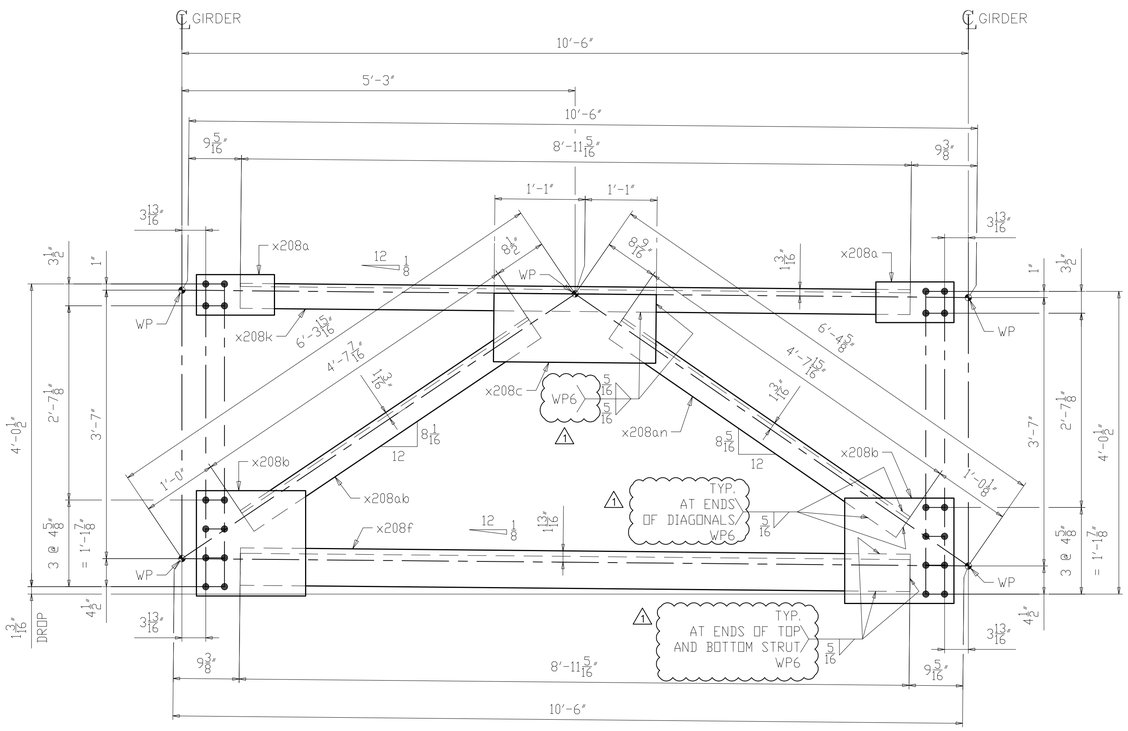

8 ~ INTERMEDIATE K-FRAME ~ 240CF1

(SPAN 1, 2 & 3)

NOTES:
1. FOR GENERAL NOTES SEE SHEET GN201.
2. ALL MATERIAL A709-50WT2 (UN).
3. T2 - DENOTES MATERIAL SUBJECT TO CHARPY V-NOTCH TESTING.
4. FOR K-FRAME STANDARD DETAILS SEE X208.

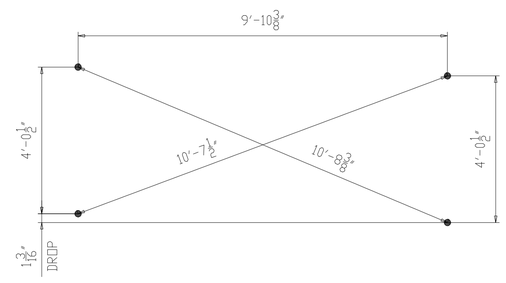

CROSS-CHECK DIAGRAM

(DIMENSIONS ARE GIVEN TO THE OUTERMOST HOLES)

NO.	DATE	REMARKS	BY
1	10/10/19	WELD PROCEDURE # ADDED	DP

REVISIONS

Veritas STEEL
2-EAU CLAIRE, WI 3-WAUSAU, WI 4-PALATKA, FL
IAS NDT 1605

STRUCTURE	CUY-010-1976L, OH-10 WESTBOUND OVER GCRTA BLUE AND GREEN LINES
LOCATION	CLEVELAND, OHIO CUYAHOGA COUNTY
PROJECT NO.	17-3000
ENGINEER	MICHAEL BAKER INTERNATIONAL
CONTRACTOR	KOKOSING
ITEM	INTERMEDIATE K-FRAME
SURFACE PREP.	SEE P201 OPEN HOLES 1 1/16"Ø (U.N.O.)
PAINT	SEE P201

APPROVAL	DRAWN AM 06/11/19	SHEET NO.	PLANT	ORDER NO.
SHOP	CHECKED SA 07/10/19	240	3	317023A-37

LINE	SHIP MARK	NO. OF PCS.	ASS'Y MARK	MATERIAL SHAPE	LENGTH FT.	LENGTH IN.	MATERIAL SPEC.	ITEM NO.	REMARKS	
1	241CF1	4		INTERMEDIATE K-FRAME						2706
2		8	x208a	PL 1/2 x 6 1/2	1	0 1/2	A709-50WT2	2107	CVN	92
3		8	x208b	PL 1/2 x 16 7/8	1	5 1/2	A709-50WT2	2108	CVN	335
4		4	x208c	PL 1/2 x 11	2	2	A709-50WT2	2109	CVN	162
5		4	x208f	L6 x 6 x 7/8	8	11 5/16	A709-50WT2	2104	CVN	1184
6		4	x208m	L4 x 4 x 1/2	8	11 3/8	A709-50WT2	2105	CVN	458
7		4	x208ac	L4 x 4 x 1/2	4	7 9/16	A709-50WT2	2106	CVN	237
8		4	x208am	L4 x 4 x 1/2	4	7 7/8	A709-50WT2	2106	CVN	238

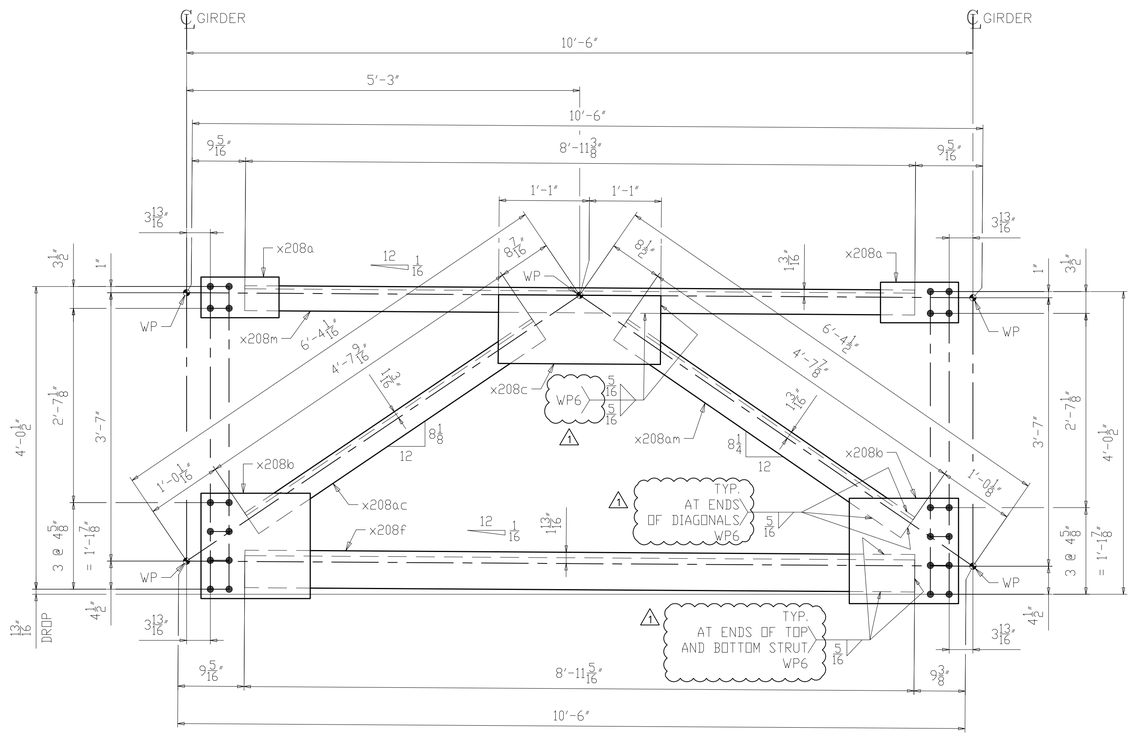

4 ~ INTERMEDIATE K-FRAME ~ 241CF1

(SPAN 1 & 3)

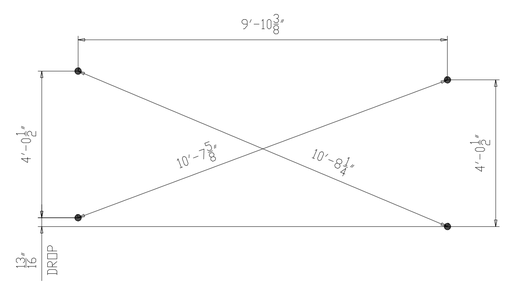

CROSS-CHECK DIAGRAM

(DIMENSIONS ARE GIVEN TO THE OUTERMOST HOLES)

NOTES:
1. FOR GENERAL NOTES SEE SHEET GN201.
2. ALL MATERIAL A709-50WT2 (UN).
3. T2 - DENOTES MATERIAL SUBJECT TO CHARPY V-NOTCH TESTING.
4. FOR K-FRAME STANDARD DETAILS SEE X208.

NO.	DATE	REMARKS	BY
1	10/10/19	WELD PROCEDURE # ADDED	DP

REVISIONS

Veritas STEEL
2-EAU CLAIRE, WI 3-WAUSAU, WI 4-PALATKA, FL
IENCA 1605

STRUCTURE	CUY-010-1976L, OH-10 WESTBOUND OVER GCRTA BLUE AND GREEN LINES
LOCATION	CLEVELAND, OHIO CUYAHOGA COUNTY
PROJECT NO.	17-3000
ENGINEER	MICHAEL BAKER INTERNATIONAL
CONTRACTOR	KOKOSING
ITEM	INTERMEDIATE K-FRAME
SURFACE PREP.	SEE P201
OPEN HOLES	1 1/16"Ø (U.N.O.)
PAINT	SEE P201

APPROVAL	DRAWN AM 06/11/19	SHEET NO.	PLANT	ORDER NO.
SHOP	CHECKED SA 07/10/19	241	3	317023A-37

LINE	SHIP MARK	NO. OF PCS.	ASS'Y MARK	MATERIAL SHAPE	LENGTH FT.	LENGTH IN.	MATERIAL SPEC.	ITEM NO.	REMARKS	
1	242CF1	2		INTERMEDIATE K-FRAME						1353
2		4	x208a	PL 1/2 x 6 1/2	1	0 1/2	A709-50WT2	2107	CVN	46
3		4	x208b	PL 1/2 x 16 7/8	1	5 1/2	A709-50WT2	2108	CVN	167
4		2	x208c	PL 1/2 x 11	2	2	A709-50WT2	2109	CVN	81
5		2	x208g	L6 x 6 x 7/8	8	11 3/8	A709-50WT2	2104	CVN	592
6		2	x208m	L4 x 4 x 1/2	8	11 3/8	A709-50WT2	2105	CVN	229
7		2	x208ac	L4 x 4 x 1/2	4	7 9/16	A709-50WT2	2106	CVN	119
8		2	x208ak	L4 x 4 x 1/2	4	7 13/16	A709-50WT2	2106	CVN	119

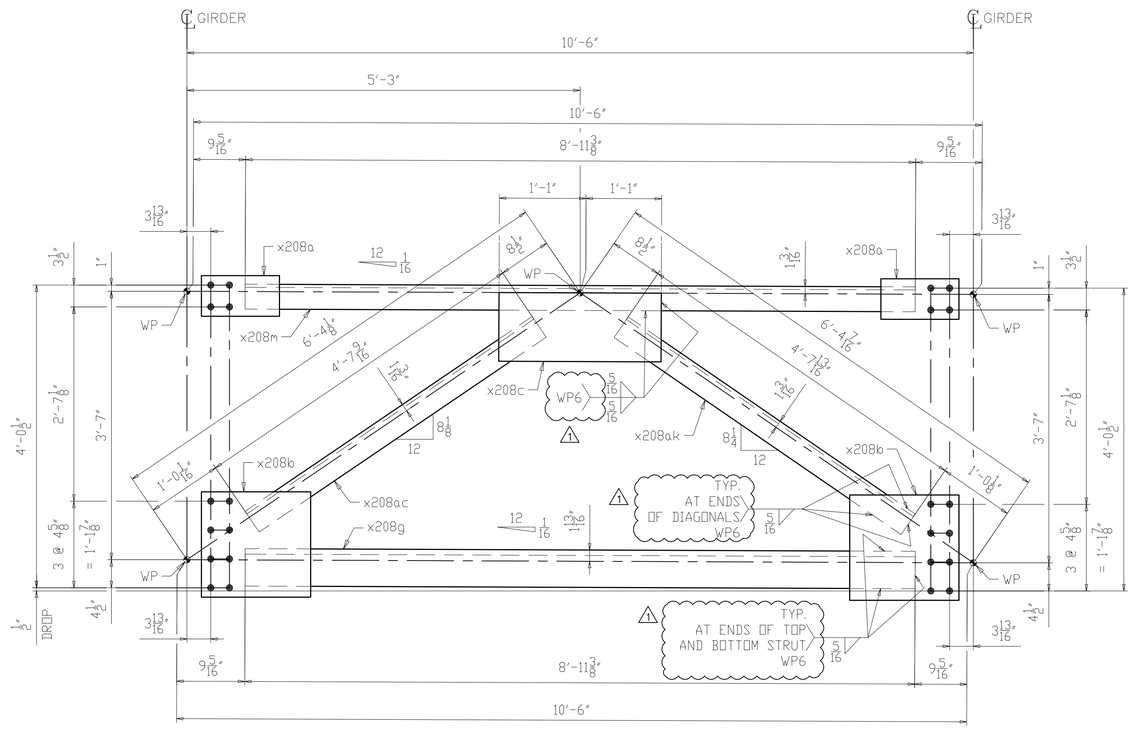

2 ~ INTERMEDIATE K-FRAME ~ 242CF1

(SPAN 2 & 3)

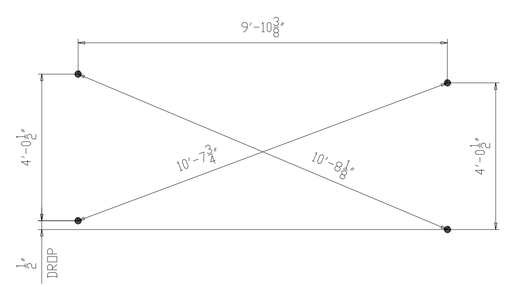

CROSS-CHECK DIAGRAM

(DIMENSIONS ARE GIVEN TO THE OUTERMOST HOLES)

NOTES:

1. FOR GENERAL NOTES SEE SHEET GN201.
2. ALL MATERIAL A709-50WT2 (UN).
3. T2 - DENOTES MATERIAL SUBJECT TO CHARPY V-NOTCH TESTING.
4. FOR K-FRAME STANDARD DETAILS SEE X208.

NO.	DATE	REMARKS	BY
1	10/10/19	WELD PROCEDURE # ADDED	DP

REVISIONS

Veritas STEEL

2-EAU CLAIRE, WI 3-WAUSAU, WI 4-PALATKA, FL

IAS 1605

STRUCTURE	CUY-010-1976L, OH-10 WESTBOUND OVER GCRTA BLUE AND GREEN LINES
LOCATION	CLEVELAND, OHIO CUYAHOGA COUNTY
PROJECT NO.	17-3000
ENGINEER	MICHAEL BAKER INTERNATIONAL
CONTRACTOR	KOKOSING
ITEM	INTERMEDIATE K-FRAME
SURFACE PREP.	SEE P201
OPEN HOLES	1 1/16"Ø (U.N.O.)
PAINT	SEE P201

APPROVAL	DRAWN AM 06/11/19	SHEET NO.	PLANT	ORDER NO.
SHOP	CHECKED SA 07/10/19	242	3	317023A-37

LINE	SHIP MARK	NO. OF PCS.	ASS'Y MARK	MATERIAL SHAPE	LENGTH FT.	LENGTH IN.	MATERIAL SPEC.	ITEM NO.	REMARKS	
1	243CF1	2		INTERMEDIATE K-FRAME						1353
2		4	x208a	PL 1/2 x 6 1/2	1	0 1/2	A709-50WT2	2107	CVN	46
3		4	x208b	PL 1/2 x 16 7/8	1	5 1/2	A709-50WT2	2108	CVN	167
4		2	x208c	PL 1/2 x 11	2	2	A709-50WT2	2109	CVN	81
5		2	x208g	L6 x 6 x 7/8	8	11 3/8	A709-50WT2	2104	CVN	592
6		2	x208m	L4 x 4 x 1/2	8	11 3/8	A709-50WT2	2105	CVN	229
7		4	x208af	L4 x 4 x 1/2	4	7 11/16	A709-50WT2	2106	CVN	238

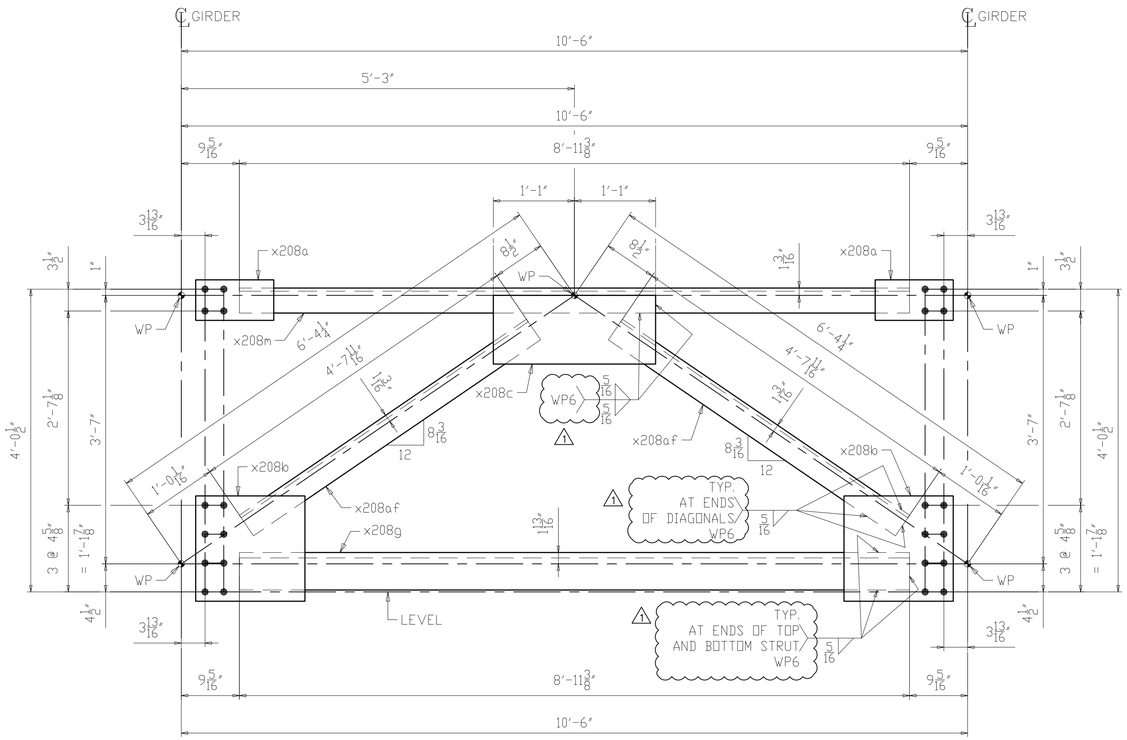

2 ~ INTERMEDIATE K-FRAME ~ 243CF1

(SPAN 2)

NOTES:
1. FOR GENERAL NOTES SEE SHEET GN201.
2. ALL MATERIAL A709-50WT2 (UN).
3. T2 - DENOTES MATERIAL SUBJECT TO CHARPY V-NOTCH TESTING.
4. FOR K-FRAME STANDARD DETAILS SEE X208.

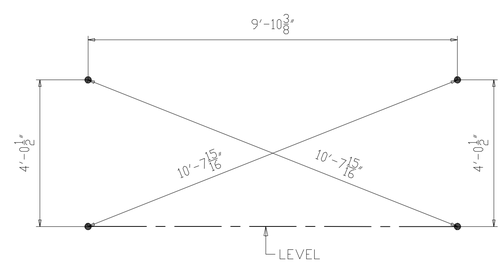

CROSS-CHECK DIAGRAM

(DIMENSIONS ARE GIVEN TO THE OUTERMOST HOLES)

NO.	DATE	REMARKS	BY
1	10/10/19	WELD PROCEDURE # ADDED	DP

REVISIONS

Veritas STEEL

2-EAU CLAIRE, WI 3-WAUSAU, WI 4-PALATKA, FL

IENCA 1605

STRUCTURE: CUY-010-1976L, OH-10 WESTBOUND OVER GCRTA BLUE AND GREEN LINES

LOCATION: CLEVELAND, OHIO CUYAHOGA COUNTY

PROJECT NO.: 17-3000

ENGINEER: MICHAEL BAKER INTERNATIONAL

CONTRACTOR: KOKOSING

ITEM: INTERMEDIATE K-FRAME

SURFACE PREP.: SEE P201 OPEN HOLES: 1 1/16"Ø (U.N.O.)

PAINT: SEE P201

APPROVAL	DRAWN AM 06/11/19	SHEET NO.	PLANT	ORDER NO.
SHOP	CHECKED SA 07/10/19	243	3	317023A-37

LINE	SHIP MARK	NO. OF PCS.	ASS'Y MARK	MATERIAL SHAPE	LENGTH FT.	LENGTH IN.	MATERIAL SPEC.	ITEM NO.	REMARKS	
1	244CF1	4		INTERMEDIATE K-FRAME						2707
2		8	x208a	PL 1/2 x 6 1/2	1	0 1/2	A709-50WT2	2107	CVN	92
3		8	x208b	PL 1/2 x 16 7/8	1	5 1/2	A709-50WT2	2108	CVN	335
4		4	x208c	PL 1/2 x 11	2	2	A709-50WT2	2109	CVN	162
5		4	x208g	L6 x 6 x 7/8	8	11 3/8	A709-50WT2	2104	CVN	1185
6		4	x208m	L4 x 4 x 1/2	8	11 3/8	A709-50WT2	2105	CVN	458
7		4	x208ad	L4 x 4 x 1/2	4	7 5/8	A709-50WT2	2106	CVN	237
8		4	x208ag	L4 x 4 x 1/2	4	7 3/4	A709-50WT2	2106	CVN	238

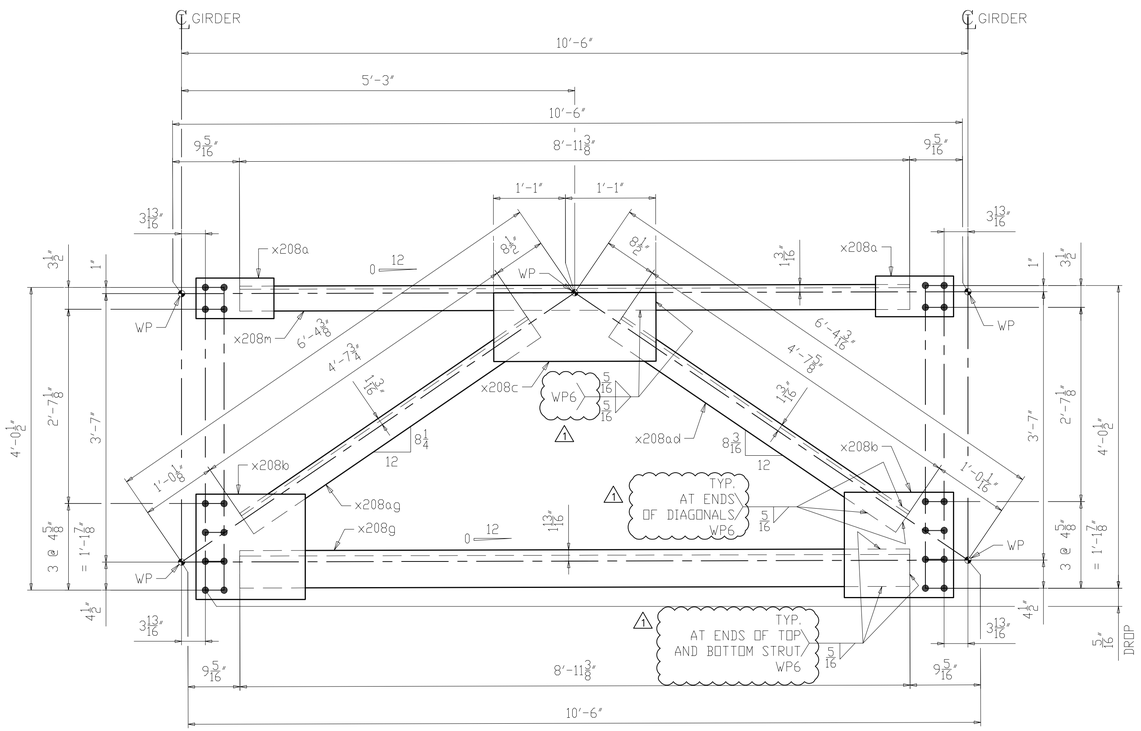

4 ~ INTERMEDIATE K-FRAME ~ 244CF1

(SPAN 2)

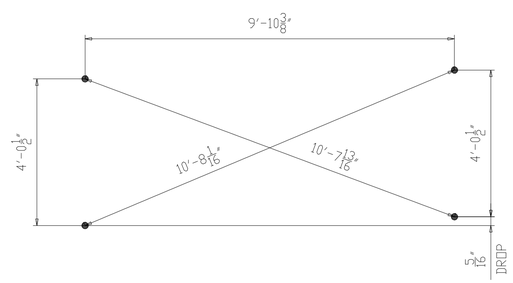

CROSS-CHECK DIAGRAM

(DIMENSIONS ARE GIVEN TO THE OUTERMOST HOLES)

NOTES:
1. FOR GENERAL NOTES SEE SHEET GN201.
2. ALL MATERIAL A709-50WT2 (UN).
3. T2 - DENOTES MATERIAL SUBJECT TO CHARPY V-NOTCH TESTING.
4. FOR K-FRAME STANDARD DETAILS SEE X208.

NO.	DATE	REMARKS	BY
1	10/10/19	WELD PROCEDURE # ADDED	DP

REVISIONS

Veritas STEEL
2-EAU CLAIRE, WI 3-WAUSAU, WI 4-PALATKA, FL
IAS 1605

STRUCTURE	CUY-010-1976L, OH-10 WESTBOUND OVER GCRTA BLUE AND GREEN LINES
LOCATION	CLEVELAND, OHIO CUYAHOGA COUNTY
PROJECT NO.	17-3000
ENGINEER	MICHAEL BAKER INTERNATIONAL
CONTRACTOR	KOKOSING
ITEM	INTERMEDIATE K-FRAME
SURFACE PREP.	SEE P201
OPEN HOLES	1 1/16"Ø (U.N.O.)
PAINT	SEE P201

APPROVAL	DRAWN AM 06/11/19	SHEET NO.	PLANT	ORDER NO.
SHOP	CHECKED SA 07/10/19	244	3	317023A-37

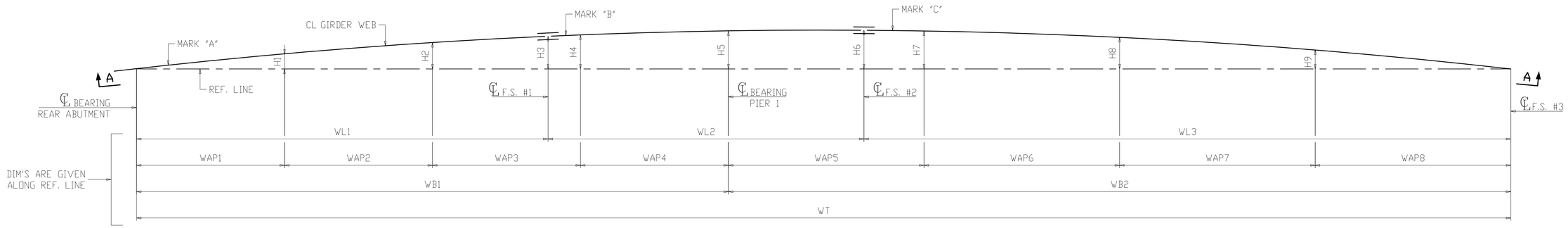

PLAN VIEW AT BOTTOM OF WEB

LINE	WT	WL1	WL2	WL3	H1	H2	H3	H4	H5	H6	H7	H8	H9	WB1	WB2	WAP1	WAP2	WAP3	WAP4	WAP5	WAP6	WAP7	WAP8
A	280'-0 7/16"	83'-9 15/16"	64'-4 15/16"	131'-9 9/16"	1'-8 3/16"	2'-11 7/16"	3'-8"	3'-9 7/8"	4'-3 7/16"	4'-4 5/16"	4'-3 3/8"	3'-6 3/4"	2'-1 5/8"	120'-7 1/4"	159'-5 3/16"	30'-1 1/2"	30'-1 3/4"	30'-1 15/16"	30'-2 1/16"	39'-10 9/16"	39'-10 1/2"	39'-10 1/4"	39'-9 7/8"
B	283'-2 15/16"	88'-6 1/4"	68'-1"	126'-7 11/16"	1'-9 3/8"	3'-1 3/8"	3'-10 3/8"	4'-0 1/16"	4'-5 5/16"	4'-5 5/16"	4'-4 3/8"	3'-7 3/16"	2'-1 3/4"	126'-5"	156'-9 15/16"	31'-6 15/16"	31'-7 3/16"	31'-7 3/8"	31'-7 1/2"	39'-2 3/4"	39'-2 11/16"	39'-2 7/16"	39'-2 1/16"
C	284'-9 1/2"	92'-5 1/2"	77'-1 11/16"	115'-2 5/16"	1'-10 1/2"	3'-3 1/16"	4'-0 1/16"	4'-1 3/4"	4'-6 1/2"	4'-4 13/16"	4'-4 11/16"	3'-6 15/16"	2'-1 3/8"	132'-3 5/8"	152'-5 7/8"	33'-0 9/16"	33'-0 7/8"	33'-1 1/16"	33'-1 1/8"	38'-1 3/4"	38'-1 5/8"	38'-1 7/16"	38'-1 1/16"
D	290'-6 13/16"	99'-9 11/16"	72'-6 15/16"	118'-2 3/16"	2'-0"	3'-5 9/16"	4'-3 11/16"	4'-4 5/8"	4'-9 3/16"	4'-7 5/16"	4'-6 11/16"	3'-8 5/16"	2'-2 1/16"	138'-3 1/4"	152'-3 9/16"	34'-6 7/16"	34'-6 3/4"	34'-7"	34'-7 1/16"	38'-1 3/16"	38'-1 1/16"	38'-0 7/8"	38'-0 7/16"

LINE	MARK "A"	MARK "B"	MARK "C"
A	201A1	205A2	209A3
B	202B1	206B2	210B3
C	203C1	207C2	211C3
D	204D1	208D2	212D3

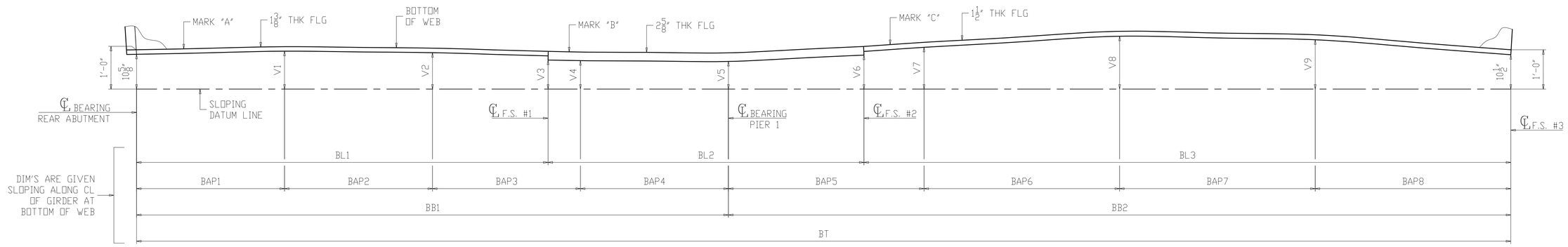

DEVELOPED VIEW A-A
(DIMENSIONS GIVEN ALONG CL WEB)

LINE	BT	BL1	BL2	BL3	V1	V2	V3	V4	V5	V6	V7	V8	V9	BB1	BB2	BAP1	BAP2	BAP3	BAP4	BAP5	BAP6	BAP7	BAP8
A	280'-2 11/16"	83'-10 15/16"	64'-5"	131'-10 3/4"	11 9/16"	11 1/8"	8 7/8"	8 11/16"	8 7/16"	10 3/8"	1'-0 3/4"	1'-4 1/8"	1'-3 1/16"	120'-8 5/16"	159'-6 3/8"	30'-2 1/16"	30'-2 1/16"	30'-2 1/16"	30'-2 1/8"	39'-10 9/16"	39'-10 5/8"	39'-10 5/8"	39'-10 9/16"
B	283'-5 5/16"	88'-7 5/16"	68'-1 1/16"	126'-8 15/16"	11 5/8"	11 3/16"	9"	8 15/16"	8 1/2"	10 5/8"	1'-0 5/8"	1'-3 1/2"	1'-2 9/16"	126'-6 1/8"	156'-11 3/16"	31'-7 1/2"	31'-7 9/16"	31'-7 9/16"	31'-7 1/2"	39'-2 15/16"	39'-2 15/16"	39'-2 15/16"	39'-2 3/4"
C	284'-11 1/8"	92'-6 5/8"	77'-1 3/4"	115'-3 1/2"	11 13/16"	11 7/16"	9 3/16"	8 7/8"	8 1/2"	11 1/16"	1'-0 1/4"	1'-2 15/16"	1'-2 7/16"	132'-4 13/16"	152'-7 1/16"	33'-1 3/16"	33'-1 3/16"	33'-1 3/16"	33'-1 1/4"	38'-1 3/4"	38'-1 3/4"	38'-1 3/4"	38'-1 13/16"
D	290'-9 3/8"	99'-10 15/16"	72'-7"	118'-3 7/16"	1'-0 5/16"	1'-0 1/16"	9 1/2"	9 3/8"	8 15/16"	11 1/4"	1'-0 3/4"	1'-3 9/16"	1'-3 5/16"	138'-4 1/2"	152'-4 7/8"	34'-7 1/8"	34'-7 1/8"	34'-7 1/8"	34'-7 1/8"	38'-1 1/4"	38'-1 3/16"	38'-1 3/16"	38'-1 1/4"

LINE	MARK "A"	MARK "B"	MARK "C"
A	201A1	205A2	209A3
B	202B1	206B2	210B3
C	203C1	207C2	211C3
D	204D1	208D2	212D3

NOTES:
1. FOR GENERAL NOTES SEE SHEET GN201.
2. ALL BLOCKING DIMENSIONS ARE GIVEN AT THE BOTTOM OF BOTTOM FLG (U.N.O.).
3. AT FIELD SPLICES BLOCKING DIMENSIONS ARE GIVEN TO THE BOTTOM OF THE THICKER FLG.

NO.	DATE	REMARKS	BY

REVISIONS

Veritas STEEL
2-EAU CLAIRE, WI 3-WAUSAU, WI 4-PALATKA, FL
TENCA 1605

STRUCTURE: CUY-010-1976L, OH-10 WESTBOUND OVER GCRTA BLUE AND GREEN LINES
LOCATION: CLEVELAND, OHIO CUYAHOGA COUNTY
PROJECT NO.: 17-3000
ENGINEER: MICHAEL BAKER INTERNATIONAL
CONTRACTOR: KOKOSING

ITEM: BLOCKING DIAGRAM
SURFACE PREP.: SEE P201 OPEN HOLES: 1 1/16"Ø (U.N.O.)
PAINT: SEE P201

APPROVAL	DRAWN AM 06/19/19	SHEET NO.	PLANT	ORDER NO.
SHOP	CHECKED DP 07/10/19	BD201	3	317023A

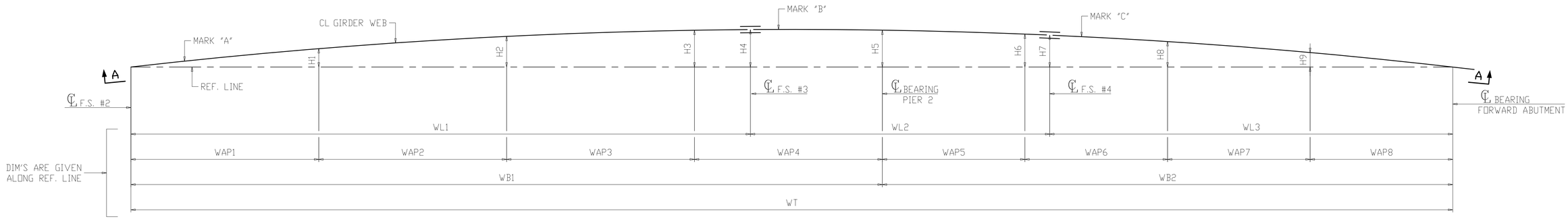

PLAN VIEW AT BOTTOM OF WEB

LINE	WT	WL1	WL2	WL3	H1	H2	H3	H4	H5	H6	H7	H8	H9	WB1	WB2	WAP1	WAP2	WAP3	WAP4	WAP5	WAP6	WAP7	WAP8
A	277'-0 1/16"	131'-9 9/16"	55'-2 3/8"	90'-0 1/8"	2'-0 7/8"	3'-5 9/16"	4'-2 1/8"	4'-3 1/4"	4'-2 9/16"	3'-9 1/4"	3'-9 1/16"	2'-11 1/16"	1'-8"	156'-0 5/8"	120'-11 7/16"	38'-11 11/16"	39'-0 1/8"	39'-0 3/8"	39'-0 7/16"	30'-3 1/8"	30'-3"	30'-2 13/16"	30'-2 1/2"
B	270'-3"	126'-7 13/16"	61'-2 3/4"	82'-4 7/16"	1'-11 15/16"	3'-3 15/16"	4'-0 1/16"	4'-0 15/16"	4'-0 3/16"	3'-7"	3'-5 5/8"	2'-9 1/4"	1'-6 15/16"	153'-7 9/16"	116'-7 7/16"	38'-4 1/2"	38'-4 7/8"	38'-5 1/16"	38'-5 1/8"	29'-2 1/8"	29'-2"	29'-1 13/16"	29'-1 1/2"
C	258'-10 7/8"	115'-2 1/2"	61'-8 13/16"	81'-11 9/16"	1'-10"	3'-0 3/4"	3'-8 1/4"	3'-8 3/4"	3'-8 1/2"	3'-3 3/4"	3'-3 3/16"	2'-6 3/4"	1'-5 1/2"	146'-8 3/16"	112'-2 11/16"	36'-7 11/16"	36'-8"	36'-8 1/4"	36'-8 1/4"	28'-0 7/8"	28'-0 13/16"	28'-0 5/8"	28'-0 3/8"
D	257'-9 5/16"	118'-2 7/16"	61'-1 7/16"	78'-5 7/16"	1'-10 7/16"	3'-1 3/16"	3'-8 3/8"	3'-8 13/16"	3'-7 7/8"	3'-2 13/16"	3'-2 3/16"	2'-5 13/16"	1'-4 7/8"	150'-0 7/16"	107'-8 7/8"	37'-5 11/16"	37'-6 1/16"	37'-6 5/16"	37'-6 3/8"	26'-11 7/16"	26'-11 5/16"	26'-11 3/16"	26'-10 15/16"

LINE	MARK "A"	MARK "B"	MARK "C"
A	209A3	213A4	217A5
B	210B3	214B4	218B5
C	211C3	215C4	219C5
D	212D3	216D4	220D5

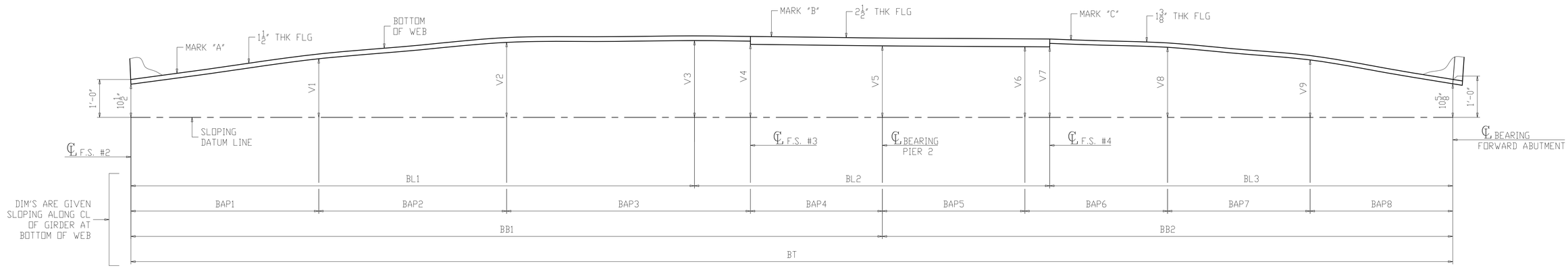

DEVELOPED VIEW A-A

(DIMENSIONS GIVEN ALONG CL WEB)

LINE	BT	BL1	BL2	BL3	V1	V2	V3	V4	V5	V6	V7	V8	V9	BB1	BB2	BAP1	BAP2	BAP3	BAP4	BAP5	BAP6	BAP7	BAP8
A	277'-2 3/8"	131'-10 3/4"	55'-2 3/8"	90'-1 1/4"	1'-6 9/16"	1'-11 3/4"	2'-0 5/16"	1'-11 1/8"	1'-10 5/8"	1'-10 3/8"	1'-10 5/16"	1'-10 3/16"	1'-6 3/16"	156'-1 13/16"	121'-0 9/16"	39'-0 7/16"	39'-0 7/16"	39'-0 7/16"	39'-0 1/2"	30'-3 1/8"	30'-3 1/8"	30'-3 1/8"	30'-3 3/16"
B	270'-5 1/4"	126'-8 7/8"	61'-2 7/8"	82'-5 1/2"	1'-6 5/8"	1'-11 3/4"	2'-1 1/4"	2'-0 5/16"	1'-11 3/4"	1'-11 1/16"	1'-10 13/16"	1'-10 3/16"	1'-5 7/8"	153'-8 11/16"	116'-8 9/16"	38'-5 3/16"	38'-5 3/16"	38'-5 3/16"	38'-5 1/8"	29'-2 1/8"	29'-2 1/8"	29'-2 1/8"	29'-2 3/16"
C	259'-0 7/8"	115'-3 1/2"	61'-8 7/8"	82'-0 1/2"	1'-6 5/8"	1'-11 15/16"	2'-2"	2'-1 1/16"	2'-0 1/8"	1'-11 1/16"	1'-10 15/16"	1'-9 15/16"	1'-5 5/8"	146'-9 3/16"	112'-3 11/16"	36'-8 5/16"	36'-8 5/16"	36'-8 5/16"	36'-8 1/4"	28'-0 15/16"	28'-0 15/16"	28'-0 15/16"	28'-0 7/8"
D	257'-11 3/8"	118'-3 7/16"	61'-1 1/2"	78'-6 7/16"	1'-7 9/16"	2'-1 7/8"	2'-3 7/8"	2'-2 13/16"	2'-1 1/4"	1'-11 11/16"	1'-11 9/16"	1'-10 3/16"	1'-5 5/8"	150'-1 7/16"	107'-9 15/16"	37'-6 3/8"	37'-6 3/8"	37'-6 3/8"	37'-6 5/16"	26'-11 1/2"	26'-11 1/2"	26'-11 1/2"	26'-11 7/16"

LINE	MARK "A"	MARK "B"	MARK "C"
A	209A3	213A4	217A5
B	210B3	214B4	218B5
C	211C3	215C4	219C5
D	212D3	216D4	220D5

NOTES:
1. FOR GENERAL NOTES SEE SHEET GN201.
2. ALL BLOCKING DIMENSIONS ARE GIVEN AT THE BOTTOM OF BOTTOM FLG (U.N.O.).
3. AT FIELD SPLICES BLOCKING DIMENSIONS ARE GIVEN TO THE BOTTOM OF THE THICKER FLG.

NO.	DATE	REMARKS	BY

REVISIONS

Veritas STEEL
2-EAU CLAIRE, WI 3-WAUSAU, WI 4-PALATKA, FL
TENCA 1605

STRUCTURE: CUY-010-1976L, OH-10 WESTBOUND OVER GCRTA BLUE AND GREEN LINES
LOCATION: CLEVELAND, OHIO CUYAHOGA COUNTY
PROJECT NO.: 17-3000
ENGINEER: MICHAEL BAKER INTERNATIONAL
CONTRACTOR: KOKOSING

ITEM: BLOCKING DIAGRAM
SURFACE PREP.: SEE P201 OPEN HOLES: 1 1/16"Ø (U.N.O.)
PAINT: SEE P201

APPROVAL	DRAWN AM 06/19/19	SHEET NO.	PLANT	ORDER NO.
SHOP	CHECKED DP 07/10/19	BD202	3	317023A

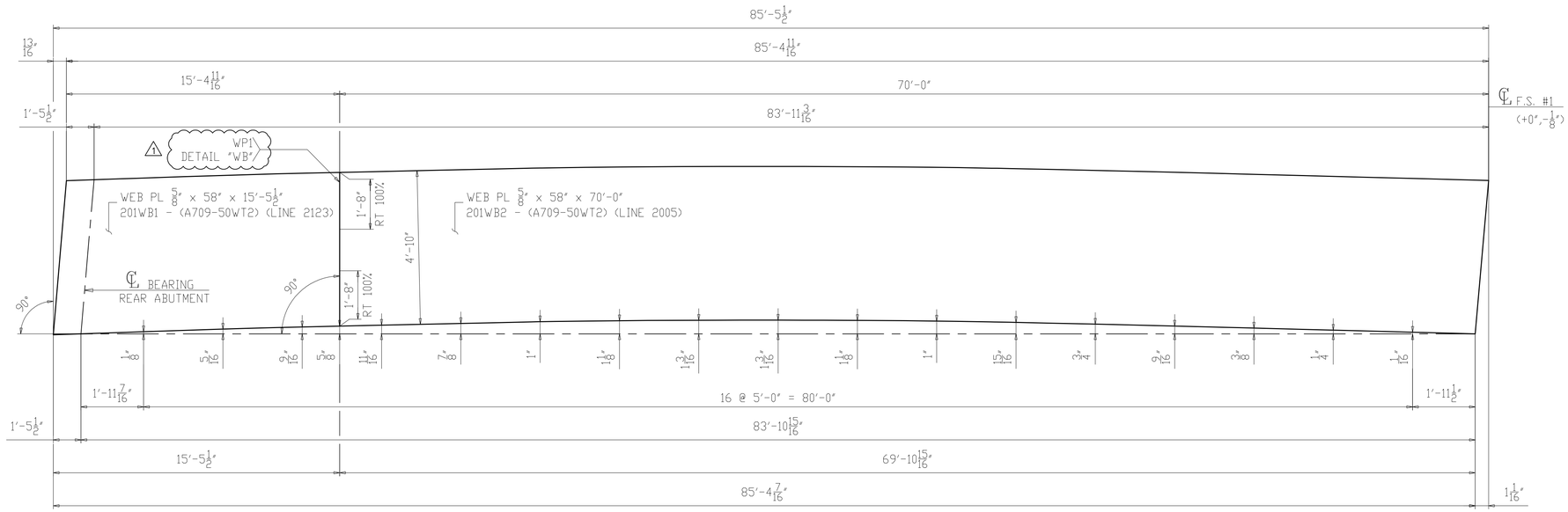

CAMBER DIAGRAM FOR 201A1
(DEVELOPED)

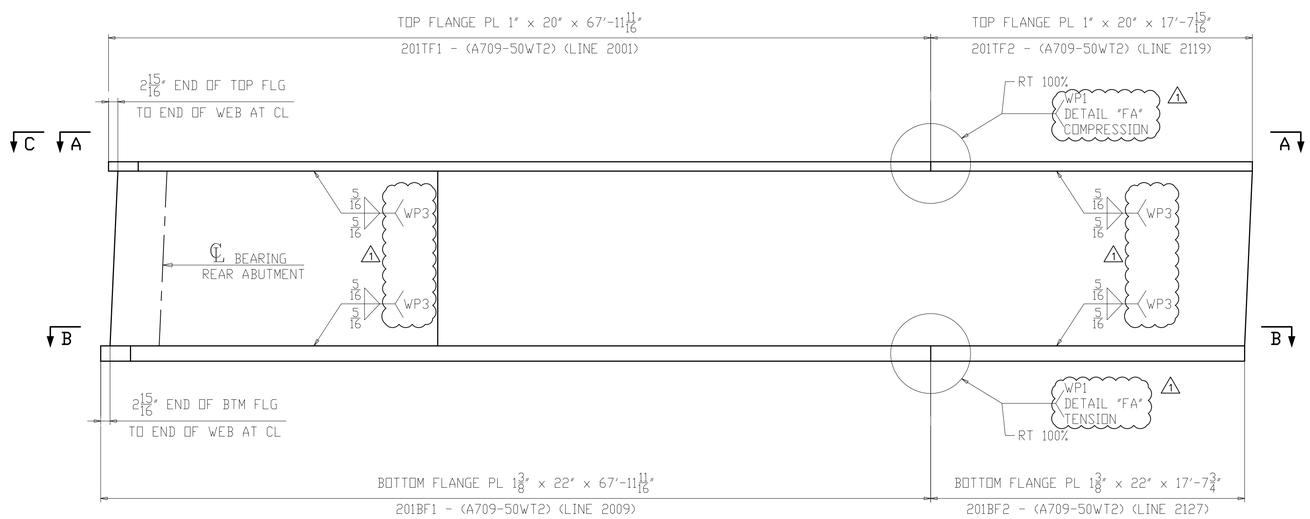

FLANGE DIAGRAM FOR 201A1

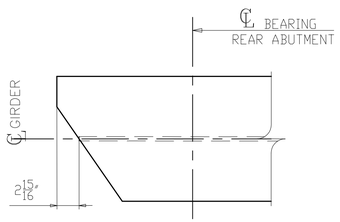

SECTION C
(SHOWN AT TOP)
(SIMILAR AT BOTTOM)

NOTES:
1. FOR GENERAL NOTES & WELD DETAILS "WB" & "FA" SEE SHEET GN201.
2. ALL MATERIAL A709-50WT2 (UN)
3. T2 - DENOTES MATERIAL SUBJECT TO CHARPY V-NOTCH TEST
- CVN = 15 FT-LBS @ 40°F "H" FREQ FOR THICKNESS UP 2".
- CVN = 20 FT-LBS @ 40°F "H" FREQ FOR THICKNESS OVER 2".

NO.	DATE	REMARKS	BY
1	10/10/19	WELD PROCEDURE # ADDED	DP

REVISIONS

Veritas STEEL
2-EAU CLAIRE, WI 3-WAUSAU, WI 4-PALATKA, FL
TENCA 1605

STRUCTURE	CUY-010-1976L, OH-10 WESTBOUND OVER GCRTA BLUE AND GREEN LINES
LOCATION	CLEVELAND, OHIO CUYAHOGA COUNTY
PROJECT NO.	17-3000
ENGINEER	MICHAEL BAKER INTERNATIONAL
CONTRACTOR	KOKOSING
ITEM	CAMBER & FLANGES DIAGRAM
SURFACE PREP.	SEE P201
OPEN HOLES	1 1/16"Ø (U.N.O.)
PAINT	SEE P201

APPROVAL	DRAWN AM 06/07/19	SHEET NO.	PLANT	ORDER NO.
SHOP	CHECKED SA 06/21/19	BG201AB	3	317023A-20

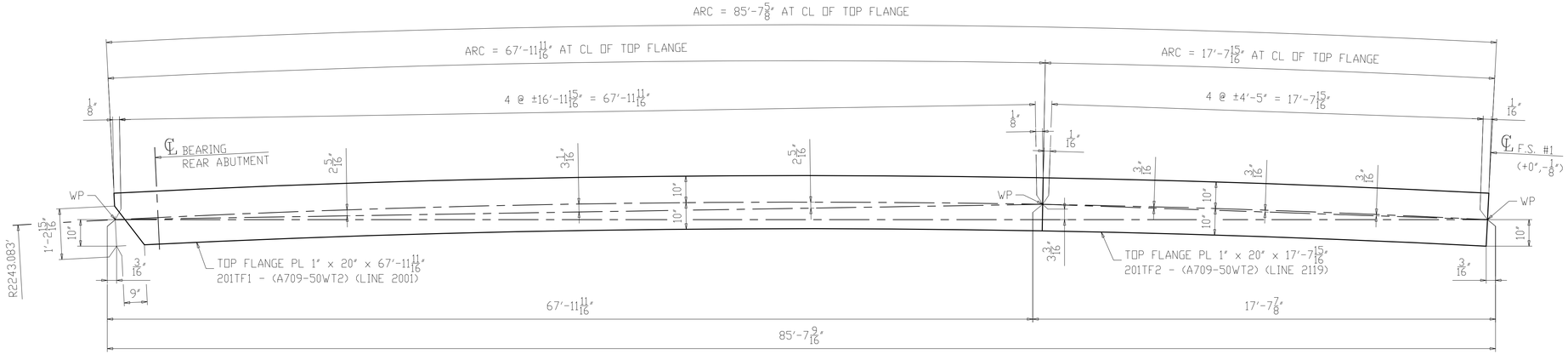

SECTION A-A
(TOP FLANGE)

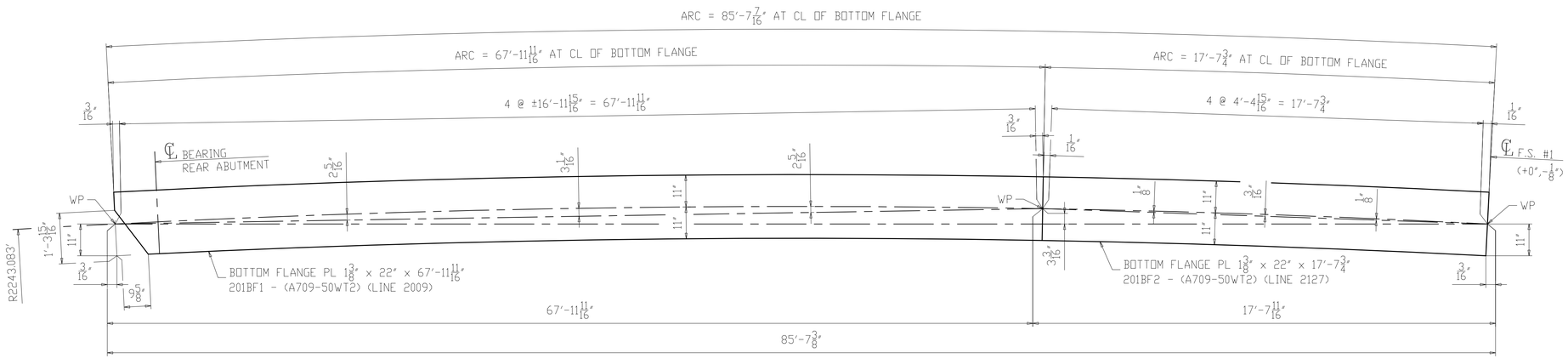

SECTION B-B
(BOTTOM FLANGE)

NOTES:
1. FOR GENERAL NOTES & WELD DETAILS "WB" & "FA" SEE SHEET GN201.
2. ALL MATERIAL A709-50WT2 (UN)
3. T2 - DENOTES MATERIAL SUBJECT TO CHARPY V-NOTCH TEST
- CVN = 15 FT-LBS @ 40°F "H" FREQ FOR THICKNESS UP 2".
- CVN = 20 FT-LBS @ 40°F "H" FREQ FOR THICKNESS OVER 2".

NO.	DATE	REMARKS	BY
△			

REVISIONS

Veritas STEEL
2-EAU CLAIRE, WI 3-WAUSAU, WI 4-PALATKA, FL
IAS 1605

STRUCTURE	CUY-010-1976L, OH-10 WESTBOUND OVER GCRTA BLUE AND GREEN LINES
LOCATION	CLEVELAND, OHIO CUYAHOGA COUNTY
PROJECT NO.	17-3000
ENGINEER	MICHAEL BAKER INTERNATIONAL
CONTRACTOR	KOKOSING
ITEM	FLANGE DIAGRAM
SURFACE PREP.	SEE P201
OPEN HOLES	1 1/16"Ø (U.N.O.)
PAINT	SEE P201

APPROVAL	DRAWN AM 06/07/19	SHEET NO.	PLANT	ORDER NO.
SHOP	CHECKED SA 06/21/19	BG201B	3	317023A-20

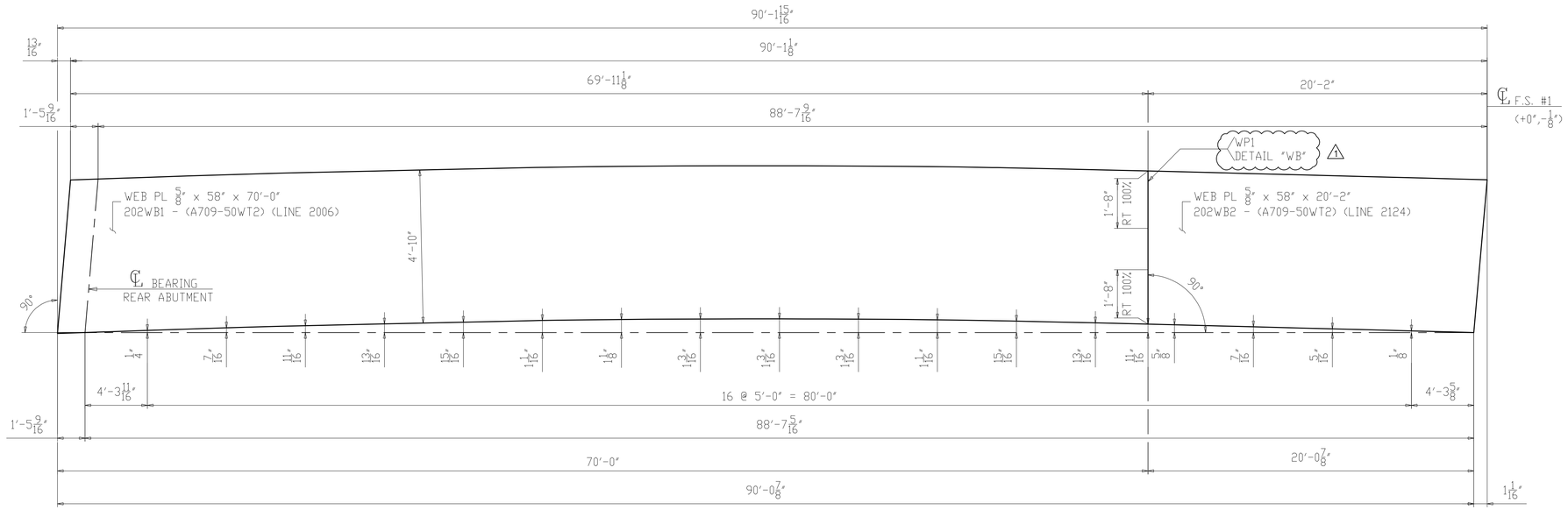

CAMBER DIAGRAM FOR 202B1
(DEVELOPED)

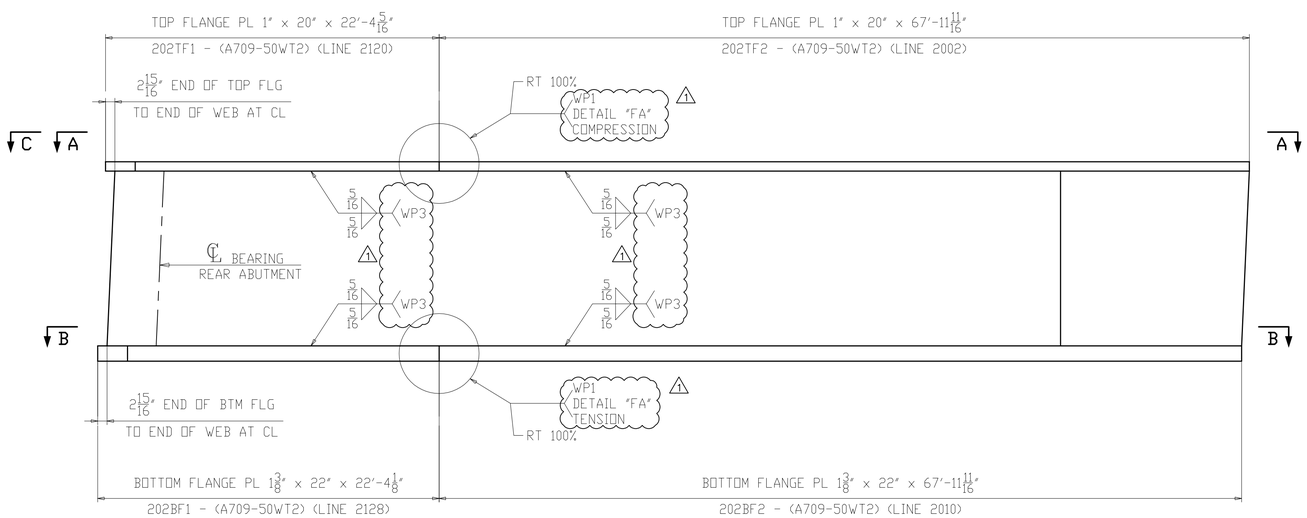

FLANGE DIAGRAM FOR 202B1

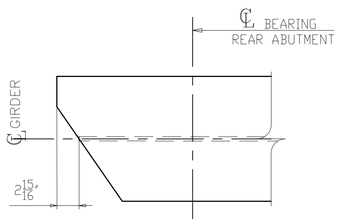

SECTION C
(SHOWN AT TOP)
(SIMILAR AT BOTTOM)

NOTES:
1. FOR GENERAL NOTES & WELD DETAILS "WB" & "FA" SEE SHEET GN201.
2. ALL MATERIAL A709-50WT2 (UN)
3. T2 - DENOTES MATERIAL SUBJECT TO CHARPY V-NOTCH TEST
- CVN = 15 FT-LBS @ 40°F "H" FREQ FOR THICKNESS UP 2".
- CVN = 20 FT-LBS @ 40°F "H" FREQ FOR THICKNESS OVER 2".

NO.	DATE	REMARKS	BY
1	10/10/19	WELD PROCEDURE # ADDED	DP

REVISIONS

Veritas STEEL
2-EAU CLAIRE, WI 3-WAUSAU, WI 4-PALATKA, FL
IAENCA 1605

STRUCTURE	CUY-010-1976L, OH-10 WESTBOUND OVER GCRTA BLUE AND GREEN LINES
LOCATION	CLEVELAND, OHIO CUYAHOGA COUNTY
PROJECT NO.	17-3000
ENGINEER	MICHAEL BAKER INTERNATIONAL
CONTRACTOR	KOKOSING
ITEM	CAMBER & FLANGES DIAGRAM
SURFACE PREP.	SEE P201
OPEN HOLES	1 1/16"Ø (U.N.O.)
PAINT	SEE P201

APPROVAL	DRAWN AM 06/07/19	SHEET NO.	PLANT	ORDER NO.
SHOP	CHECKED SA 06/21/19	BG202AB	3	317023A-20

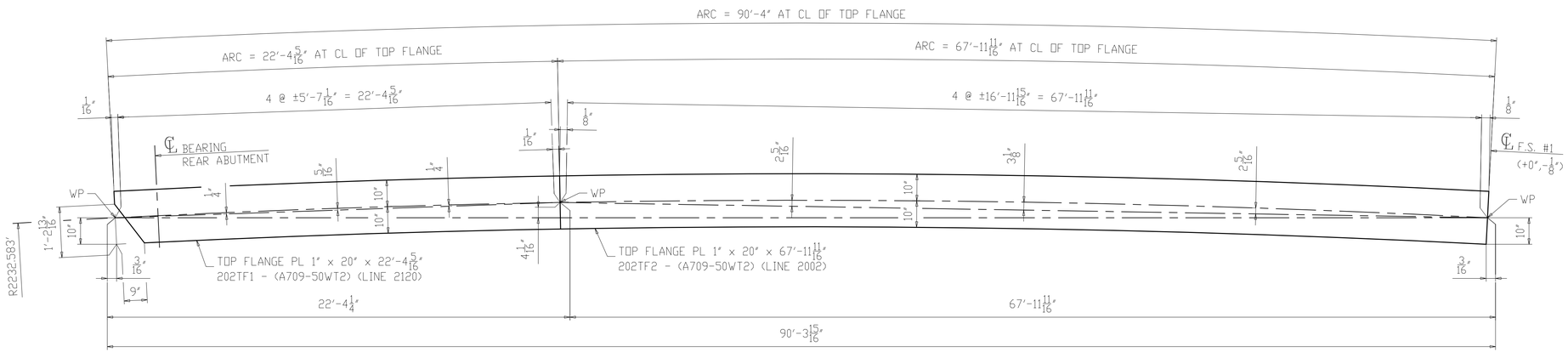

SECTION A-A
(TOP FLANGE)

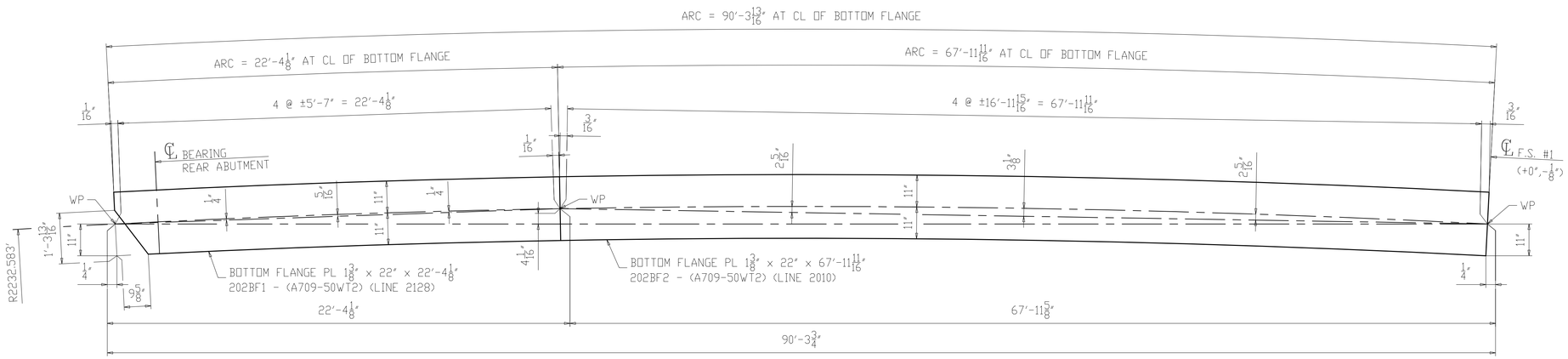

SECTION B-B
(BOTTOM FLANGE)

NOTES:
1. FOR GENERAL NOTES & WELD DETAILS "WB" & "FA" SEE SHEET GN201.
2. ALL MATERIAL A709-50WT2 (UN)
3. T2 - DENOTES MATERIAL SUBJECT TO CHARPY V-NOTCH TEST
- CVN = 15 FT-LBS @ 40°F "H" FREQ FOR THICKNESS UP 2".
- CVN = 20 FT-LBS @ 40°F "H" FREQ FOR THICKNESS OVER 2".

NO.	DATE	REMARKS	BY
△			

REVISIONS

Veritas STEEL
2-EAU CLAIRE, WI 3-WAUSAU, WI 4-PALATKA, FL
IFNCA 1605

STRUCTURE	CUY-010-1976L, OH-10 WESTBOUND OVER GCRTA BLUE AND GREEN LINES
LOCATION	CLEVELAND, OHIO CUYAHOGA COUNTY
PROJECT NO.	17-3000
ENGINEER	MICHAEL BAKER INTERNATIONAL
CONTRACTOR	KOKOSING
ITEM	FLANGE DIAGRAM
SURFACE PREP.	SEE P201
OPEN HOLES	1 1/16"Ø (U.N.O.)
PAINT	SEE P201

APPROVAL	DRAWN AM 06/07/19	SHEET NO.	PLANT	ORDER NO.
SHOP	CHECKED SA 06/21/19	BG202B	3	317023A-20

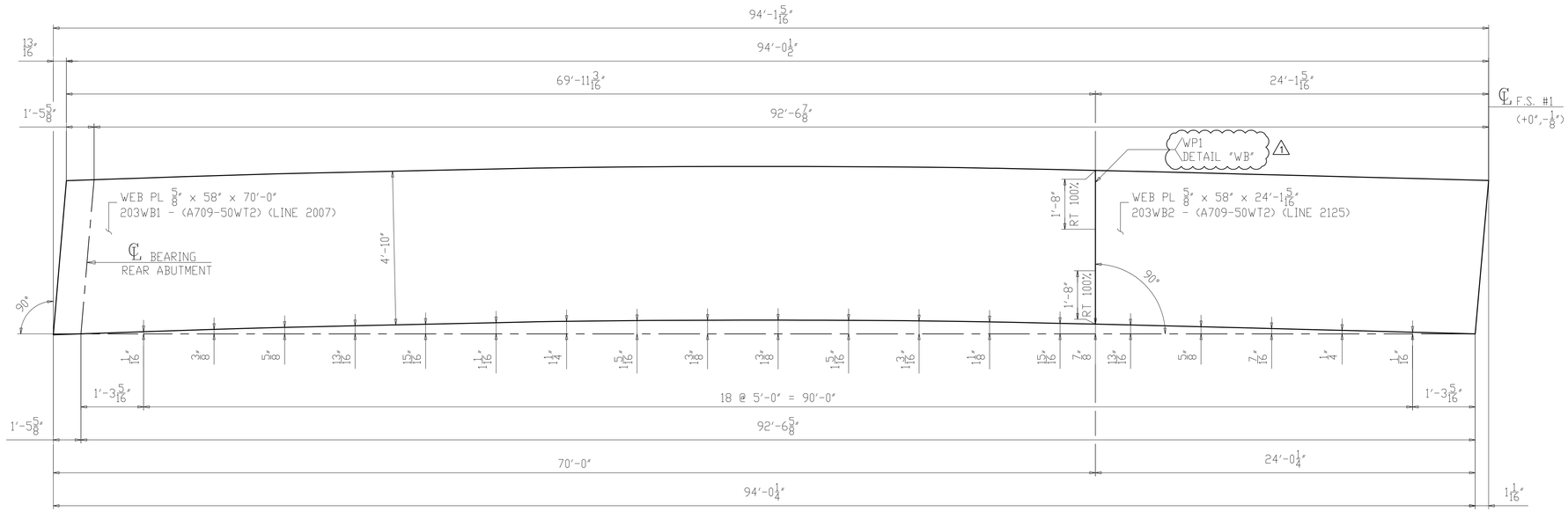

CAMBER DIAGRAM FOR 203C1
(DEVELOPED)

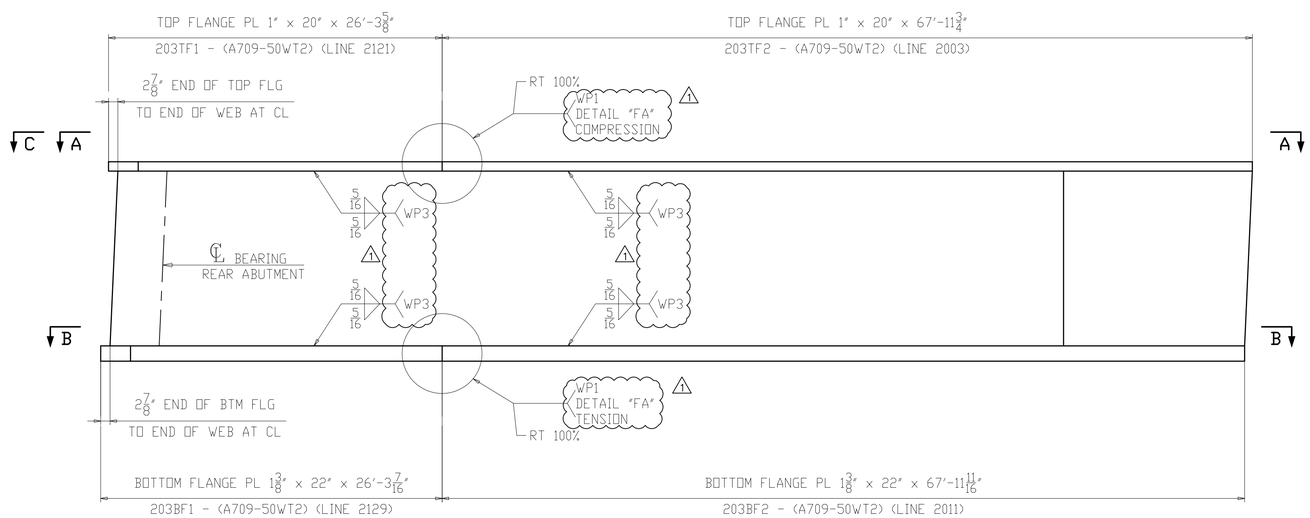

FLANGE DIAGRAM FOR 203C1

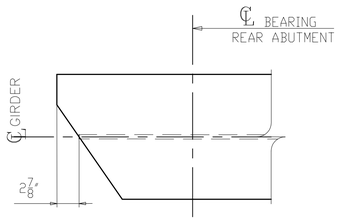

SECTION C
(SHOWN AT TOP)
(SIMILAR AT BOTTOM)

NOTES:
1. FOR GENERAL NOTES & WELD DETAILS "WB" & "FA" SEE SHEET GN201.
2. ALL MATERIAL A709-50WT2 (UN)
3. T2 - DENOTES MATERIAL SUBJECT TO CHARPY V-NOTCH TEST
- CVN = 15 FT-LBS @ 40°F "H" FREQ FOR THICKNESS UP 2".
- CVN = 20 FT-LBS @ 40°F "H" FREQ FOR THICKNESS OVER 2".

NO.	DATE	REMARKS	BY
1	10/10/19	WELD PROCEDURE # ADDED	DP

REVISIONS

Veritas STEEL
2-EAU CLAIRE, WI 3-WAUSAU, WI 4-PALATKA, FL
IAENCA 1605

STRUCTURE	CUY-010-1976L, OH-10 WESTBOUND OVER GCRTA BLUE AND GREEN LINES
LOCATION	CLEVELAND, OHIO CUYAHOGA COUNTY
PROJECT NO.	17-3000
ENGINEER	MICHAEL BAKER INTERNATIONAL
CONTRACTOR	KOKOSING
ITEM	CAMBER & FLANGES DIAGRAM
SURFACE PREP.	SEE P201
OPEN HOLES	1 1/16"Ø (U.N.O.)
PAINT	SEE P201

APPROVAL	DRAWN AM 06/07/19	SHEET NO.	PLANT	ORDER NO.
SHOP	CHECKED SA 06/21/19	BG203AB	3	317023A-20

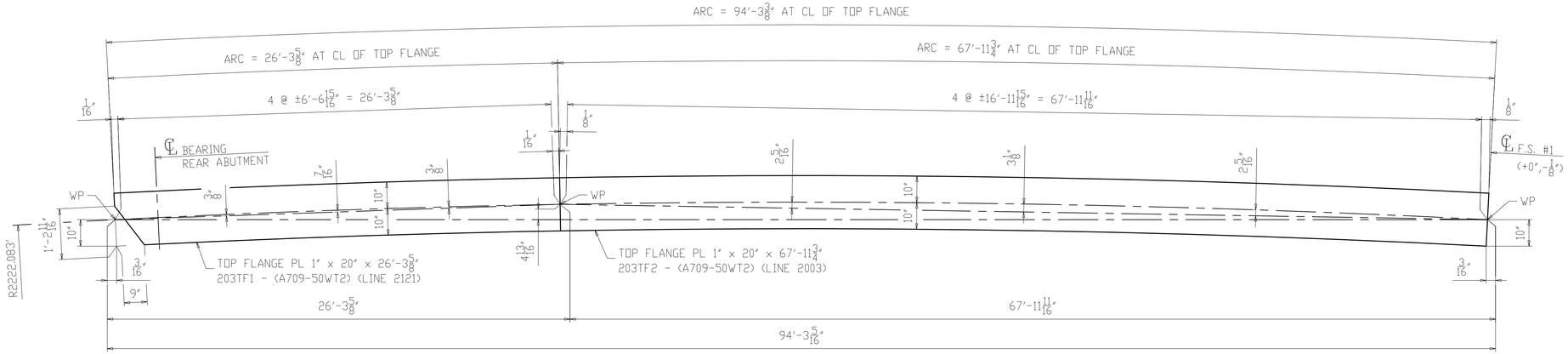

SECTION A-A
(TOP FLANGE)

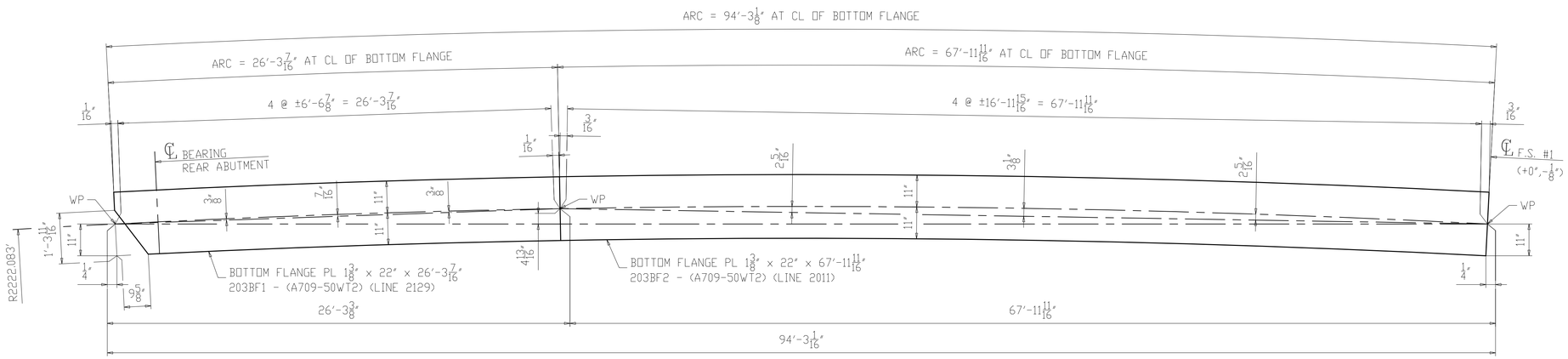

SECTION B-B
(BOTTOM FLANGE)

NOTES:
1. FOR GENERAL NOTES & WELD DETAILS "WB" & "FA" SEE SHEET GN201.
2. ALL MATERIAL A709-50WT2 (UN)
3. T2 - DENOTES MATERIAL SUBJECT TO CHARPY V-NOTCH TEST
- CVN = 15 FT-LBS @ 40°F "H" FREQ FOR THICKNESS UP 2".
- CVN = 20 FT-LBS @ 40°F "H" FREQ FOR THICKNESS OVER 2".

NO.	DATE	REMARKS	BY
△			

REVISIONS

Veritas STEEL
2-EAU CLAIRE, WI 3-WAUSAU, WI 4-PALATKA, FL
TENCA 1605

STRUCTURE	CUY-010-1976L, OH-10 WESTBOUND OVER GCRTA BLUE AND GREEN LINES
LOCATION	CLEVELAND, OHIO CUYAHOGA COUNTY
PROJECT NO.	17-3000
ENGINEER	MICHAEL BAKER INTERNATIONAL
CONTRACTOR	KOKOSING
ITEM	FLANGE DIAGRAM
SURFACE PREP.	SEE P201
OPEN HOLES	1 1/16"Ø (U.N.O.)
PAINT	SEE P201

APPROVAL	DRAWN AM 06/07/19	SHEET NO.	PLANT	ORDER NO.
SHOP	CHECKED SA 06/21/19	BG203B	3	317023A-20

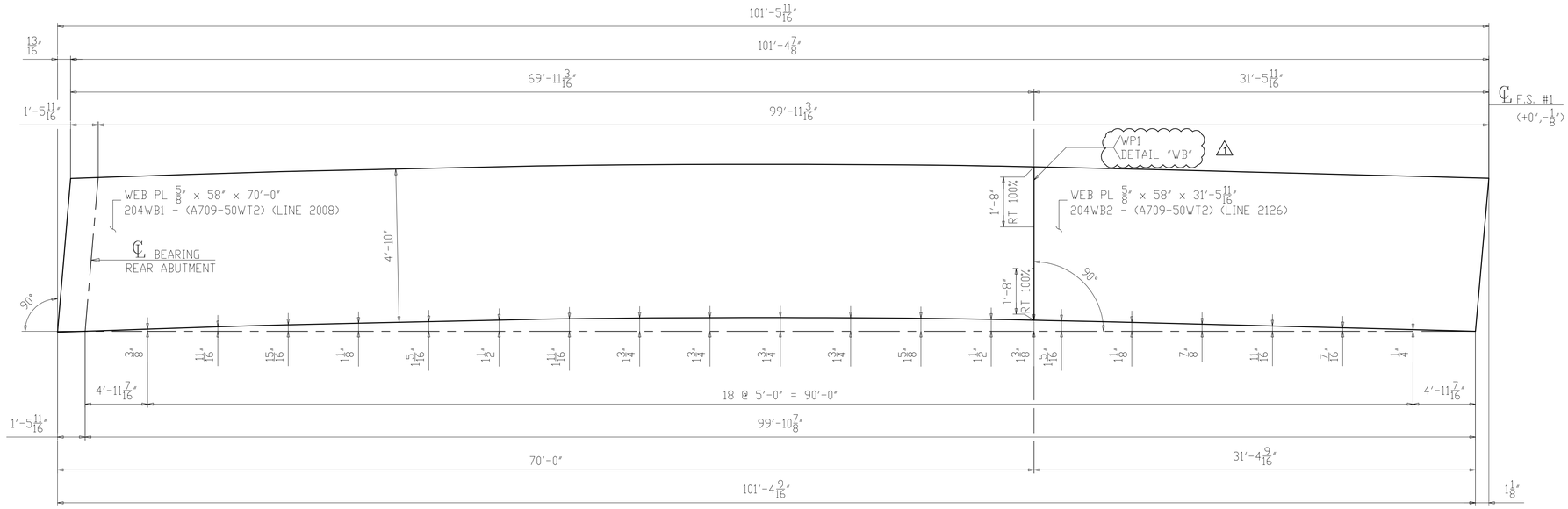

CAMBER DIAGRAM FOR 204D1
(DEVELOPED)

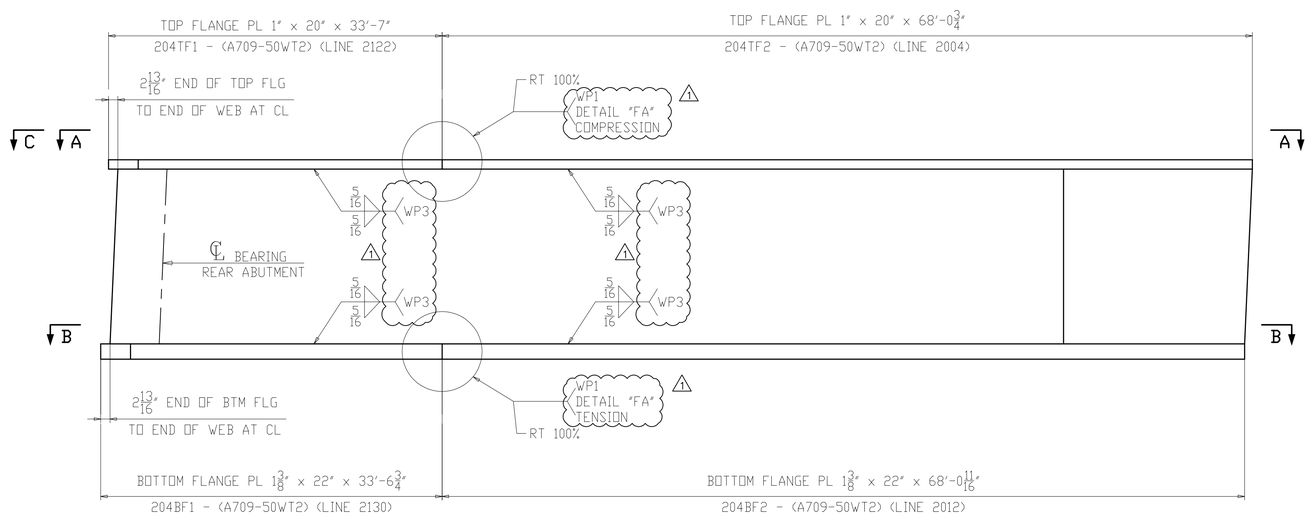

FLANGE DIAGRAM FOR 204D1

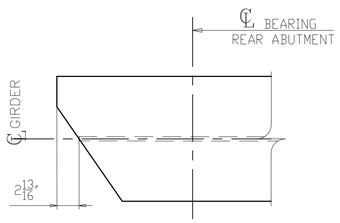

SECTION C
(SHOWN AT TOP)
(SIMILAR AT BOTTOM)

NOTES:
1. FOR GENERAL NOTES & WELD DETAILS "WB" & "FA" SEE SHEET GN201.
2. ALL MATERIAL A709-50WT2 (UN)
3. T2 - DENOTES MATERIAL SUBJECT TO CHARPY V-NOTCH TEST
- CVN = 15 FT-LBS @ 40°F "H" FREQ FOR THICKNESS UP 2".
- CVN = 20 FT-LBS @ 40°F "H" FREQ FOR THICKNESS OVER 2".

NO.	DATE	REMARKS	BY
1	10/10/19	WELD PROCEDURE # ADDED	DP

REVISIONS

Veritas STEEL
2-EAU CLAIRE, WI 3-WAUSAU, WI 4-PALATKA, FL
TENCA 1605

STRUCTURE	CUY-010-1976L, OH-10 WESTBOUND OVER GCRTA BLUE AND GREEN LINES
LOCATION	CLEVELAND, OHIO CUYAHOGA COUNTY
PROJECT NO.	17-3000
ENGINEER	MICHAEL BAKER INTERNATIONAL
CONTRACTOR	KOKOSING
ITEM	CAMBER & FLANGES DIAGRAM
SURFACE PREP.	SEE P201
OPEN HOLES	1 1/16"Ø (U.N.O.)
PAINT	SEE P201

APPROVAL	DRAWN AM 06/07/19	SHEET NO.	PLANT	ORDER NO.
SHOP	CHECKED SA 06/21/19	BG204AB	3	317023A-20

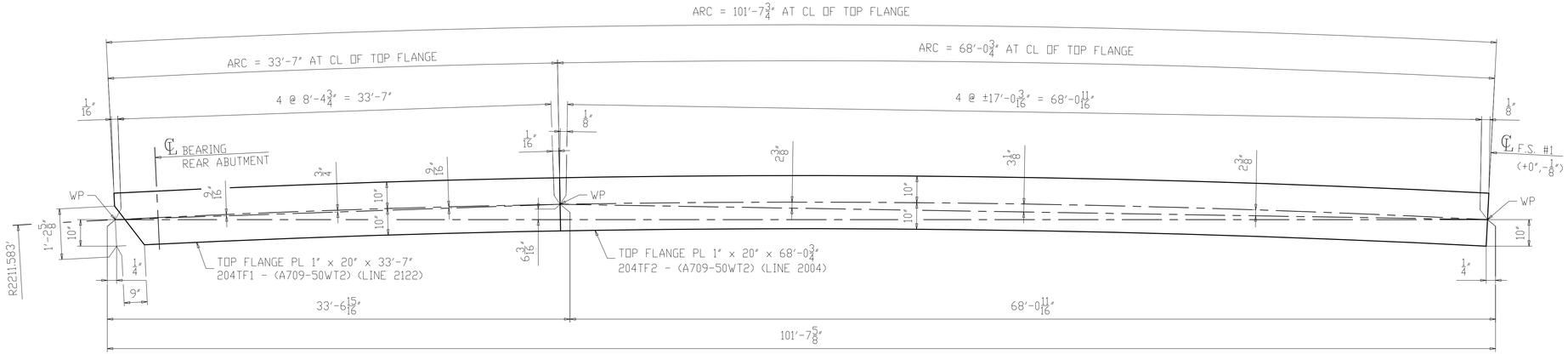

SECTION A-A
(TOP FLANGE)

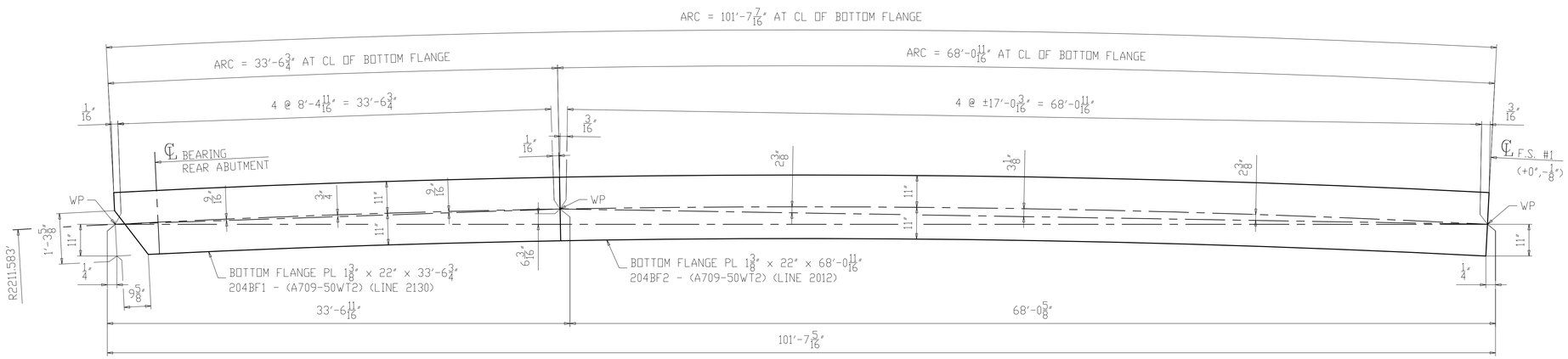

SECTION B-B
(BOTTOM FLANGE)

NOTES:
1. FOR GENERAL NOTES & WELD DETAILS "WB" & "FA" SEE SHEET GN201.
2. ALL MATERIAL A709-50WT2 (UN)
3. T2 - DENOTES MATERIAL SUBJECT TO CHARPY V-NOTCH TEST
- CVN = 15 FT-LBS @ 40°F "H" FREQ FOR THICKNESS UP 2".
- CVN = 20 FT-LBS @ 40°F "H" FREQ FOR THICKNESS OVER 2".

NO.	DATE	REMARKS	BY
△			

REVISIONS

Veritas STEEL
2-EAU CLAIRE, WI 3-WAUSAU, WI 4-PALATKA, FL
IFNCA 1605

STRUCTURE	CUY-010-1976L, OH-10 WESTBOUND OVER GCRTA BLUE AND GREEN LINES
LOCATION	CLEVELAND, OHIO CUYAHOGA COUNTY
PROJECT NO.	17-3000
ENGINEER	MICHAEL BAKER INTERNATIONAL
CONTRACTOR	KOKOSING
ITEM	FLANGE DIAGRAM
SURFACE PREP.	SEE P201
OPEN HOLES	1 1/16"Ø (U.N.O.)
PAINT	SEE P201

APPROVAL	DRAWN AM 06/07/19	SHEET NO.	PLANT	ORDER NO.
SHOP	CHECKED SA 06/21/19	BG204B	3	317023A-20

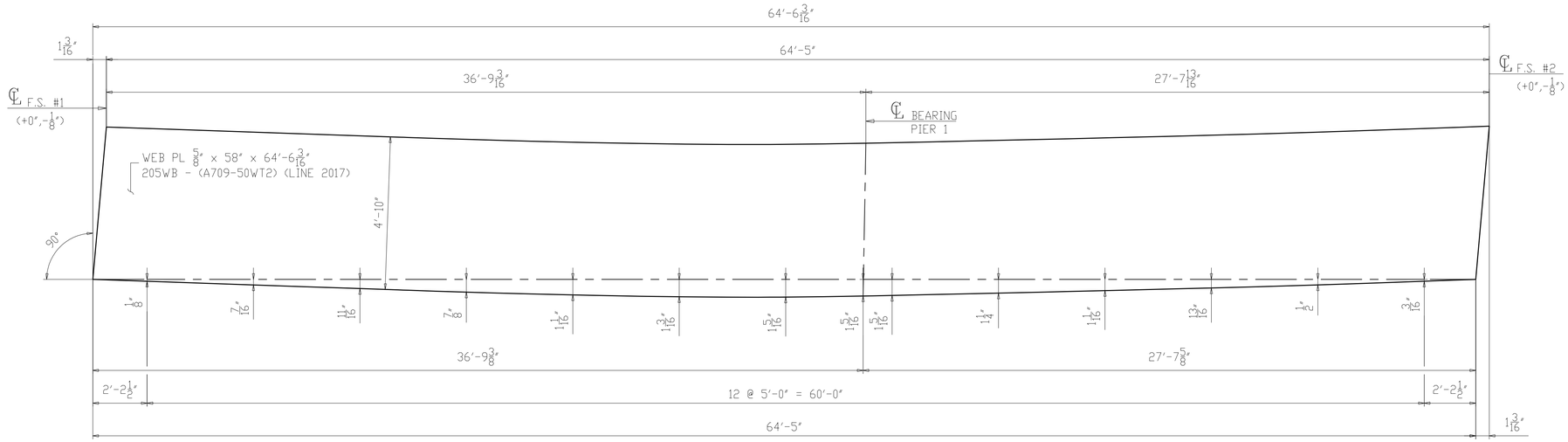

CAMBER DIAGRAM FOR 205A2
(DEVELOPED)

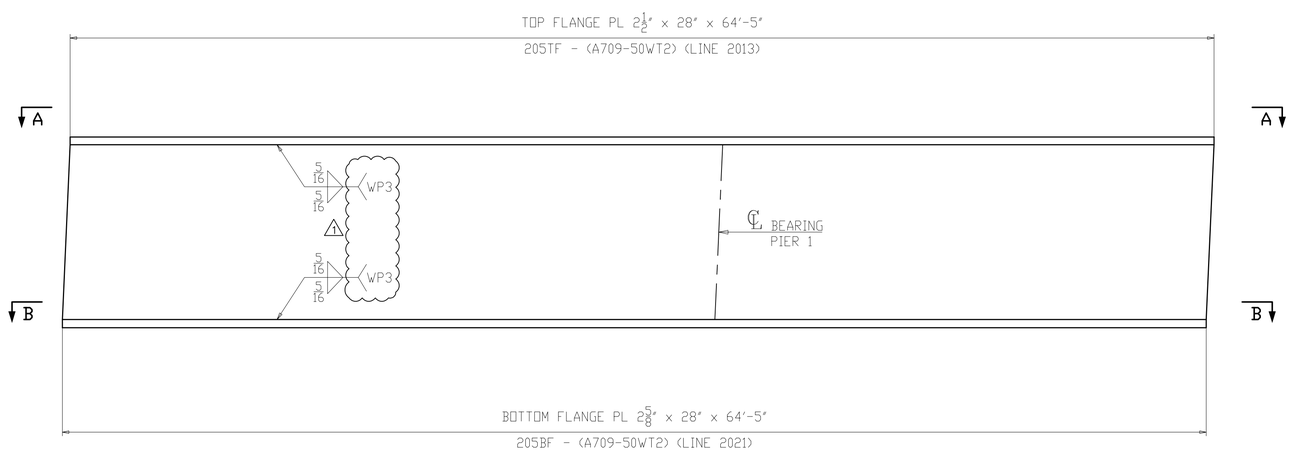

FLANGE DIAGRAM FOR 205A2

NOTES:
1. FOR GENERAL NOTES & WELD DETAILS "WB" & "FA" SEE SHEET GN201.
2. ALL MATERIAL A709-50WT2 (UN)
3. T2 - DENOTES MATERIAL SUBJECT TO CHARPY V-NOTCH TEST
- CVN = 15 FT-LBS @ 40°F "H" FREQ FOR THICKNESS UP 2".
- CVN = 20 FT-LBS @ 40°F "H" FREQ FOR THICKNESS OVER 2".

NO.	DATE	REMARKS	BY
1	10/10/19	WELD PROCEDURE # ADDED	DP

REVISIONS

Veritas STEEL
2-EAU CLAIRE, WI 3-WAUSAU, WI 4-PALATKA, FL
IAS NCA 1605

STRUCTURE	CUY-010-1976L, OH-10 WESTBOUND OVER GCRTA BLUE AND GREEN LINES
LOCATION	CLEVELAND, OHIO CUYAHOGA COUNTY
PROJECT NO.	17-3000
ENGINEER	MICHAEL BAKER INTERNATIONAL
CONTRACTOR	KOKOSING
ITEM	CAMBER & FLANGES DIAGRAM
SURFACE PREP.	SEE P201
OPEN HOLES	1 1/16"Ø (U.N.O.)
PAINT	SEE P201

APPROVAL	DRAWN AM 06/07/19	SHEET NO.	PLANT	ORDER NO.
SHOP	CHECKED SA 06/21/19	BG205AB	3	317023A-20

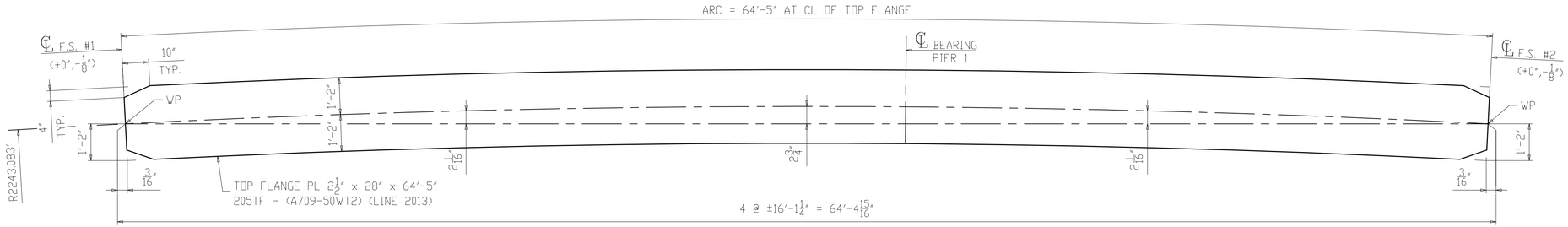

SECTION A-A
(TOP FLANGE)

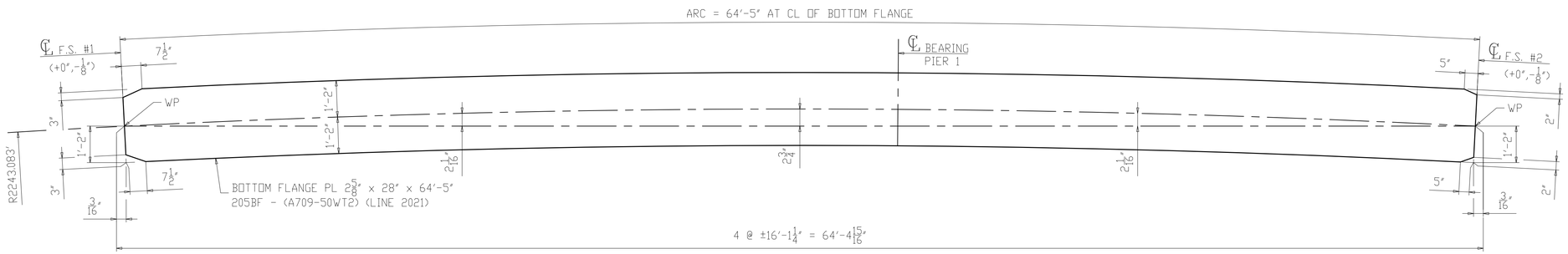

SECTION B-B
(BOTTOM FLANGE)

NOTES:
1. FOR GENERAL NOTES & WELD DETAILS "WB" & "FA" SEE SHEET GN201.
2. ALL MATERIAL A709-50WT2 (UN)
3. T2 - DENOTES MATERIAL SUBJECT TO CHARPY V-NOTCH TEST
- CVN = 15 FT-LBS @ 40°F "H" FREQ FOR THICKNESS UP 2".
- CVN = 20 FT-LBS @ 40°F "H" FREQ FOR THICKNESS OVER 2".

NO.	DATE	REMARKS	BY
△			

REVISIONS

Veritas STEEL
2-EAU CLAIRE, WI 3-WAUSAU, WI 4-PALATKA, FL
IAS 1605

STRUCTURE	CUY-010-1976L, OH-10 WESTBOUND OVER GCRTA BLUE AND GREEN LINES
LOCATION	CLEVELAND, OHIO CUYAHOGA COUNTY
PROJECT NO.	17-3000
ENGINEER	MICHAEL BAKER INTERNATIONAL
CONTRACTOR	KOKOSING
ITEM	FLANGE DIAGRAM
SURFACE PREP.	SEE P201 OPEN HOLES 1 1/16"Ø (U.N.O.)
PAINT	SEE P201

APPROVAL	DRAWN AM 06/07/19	SHEET NO.	PLANT	ORDER NO.
SHOP	CHECKED SA 06/21/19	BG205B	3	317023A-20

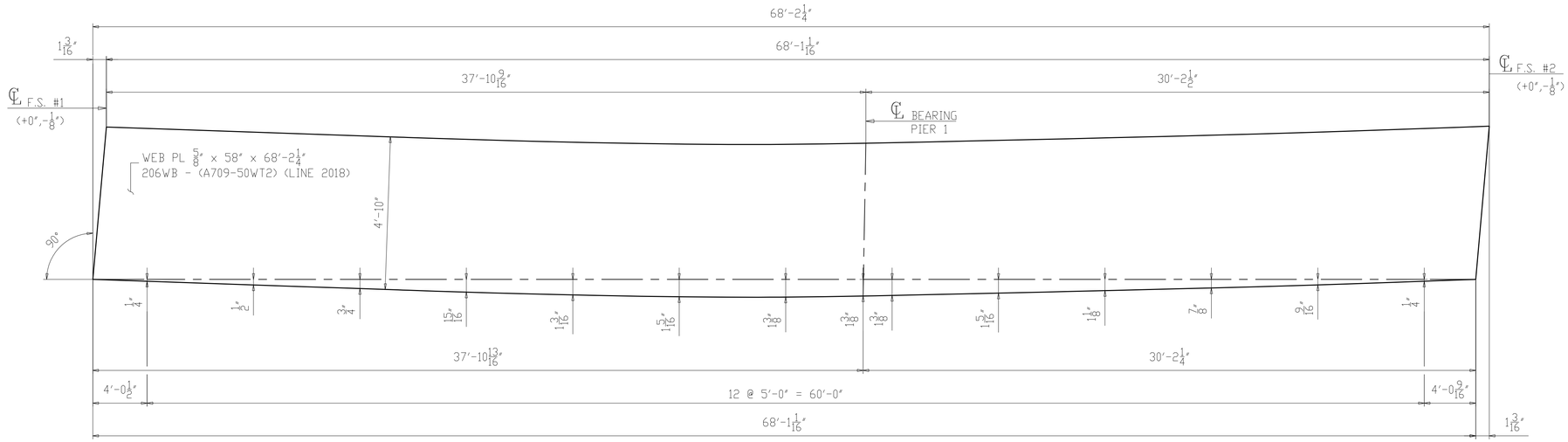

CAMBER DIAGRAM FOR 206B2
(DEVELOPED)

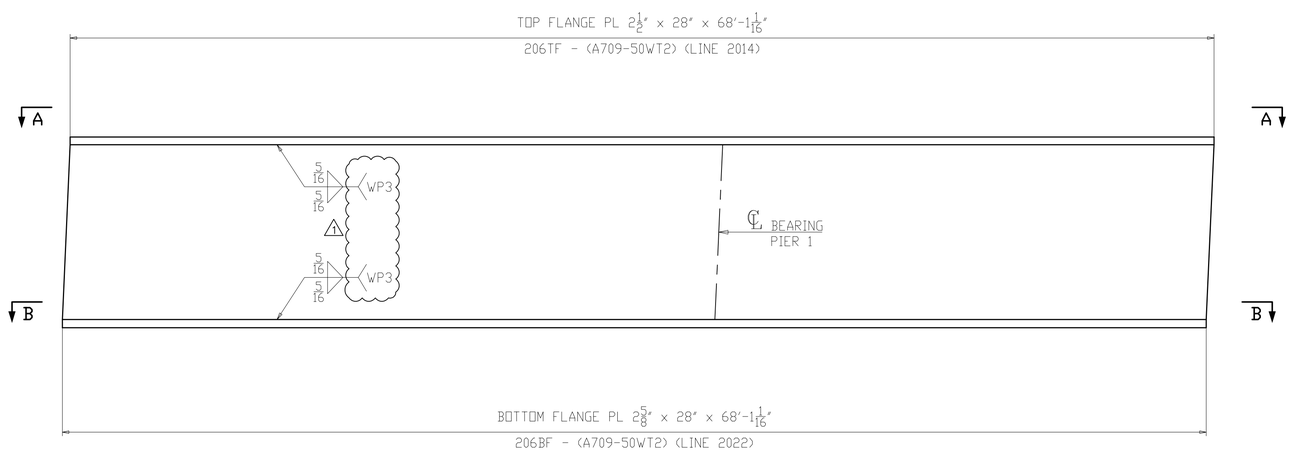

FLANGE DIAGRAM FOR 206B2

NOTES:
1. FOR GENERAL NOTES & WELD DETAILS "WB" & "FA" SEE SHEET GN201.
2. ALL MATERIAL A709-50WT2 (UN)
3. T2 - DENOTES MATERIAL SUBJECT TO CHARPY V-NOTCH TEST
- CVN = 15 FT-LBS @ 40°F "H" FREQ FOR THICKNESS UP 2".
- CVN = 20 FT-LBS @ 40°F "H" FREQ FOR THICKNESS OVER 2".

NO.	DATE	REMARKS	BY
1	10/10/19	WELD PROCEDURE # ADDED	DP

REVISIONS

Veritas STEEL
2-EAU CLAIRE, WI 3-WAUSAU, WI 4-PALATKA, FL
IAS NDT 1605

STRUCTURE	CUY-010-1976L, OH-10 WESTBOUND OVER GCRTA BLUE AND GREEN LINES
LOCATION	CLEVELAND, OHIO CUYAHOGA COUNTY
PROJECT NO.	17-3000
ENGINEER	MICHAEL BAKER INTERNATIONAL
CONTRACTOR	KOKOSING
ITEM	CAMBER & FLANGES DIAGRAM
SURFACE PREP.	SEE P201
OPEN HOLES	1 1/16"Ø (U.N.O.)
PAINT	SEE P201

APPROVAL	DRAWN AM 06/07/19	SHEET NO.	PLANT	ORDER NO.
SHOP	CHECKED SA 06/21/19	BG206AB	3	317023A-20

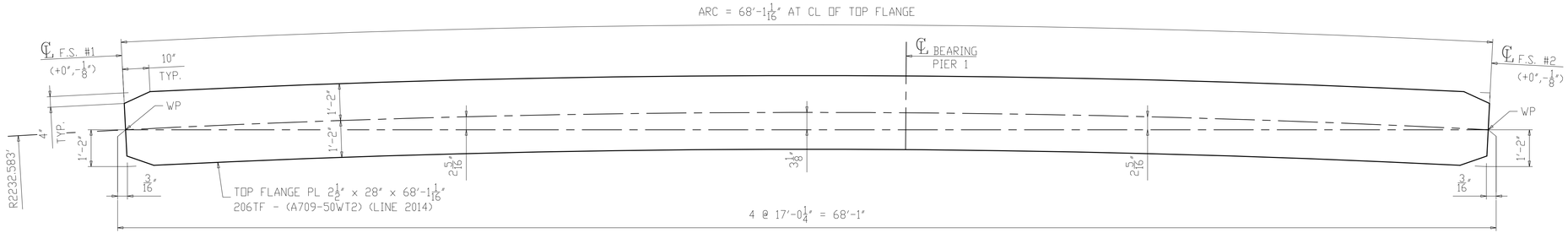

SECTION A-A
(TOP FLANGE)

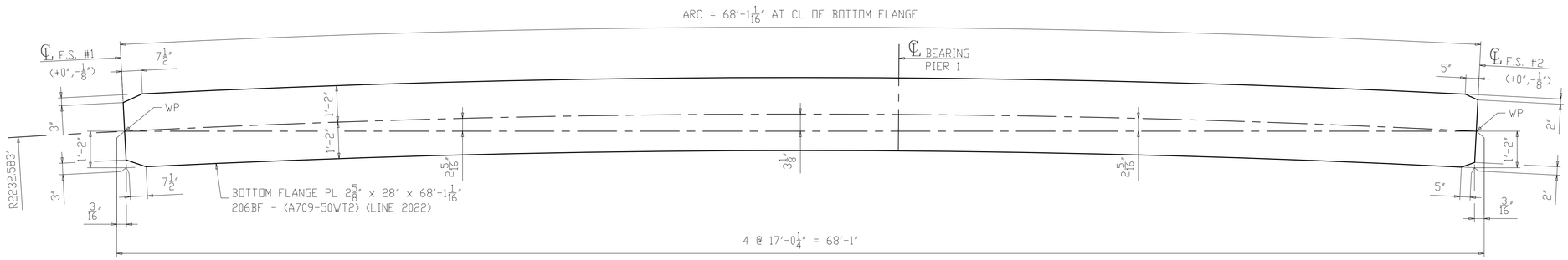

SECTION B-B
(BOTTOM FLANGE)

NOTES:
1. FOR GENERAL NOTES & WELD DETAILS "WB" & "FA" SEE SHEET GN201.
2. ALL MATERIAL A709-50WT2 (UN)
3. T2 - DENOTES MATERIAL SUBJECT TO CHARPY V-NOTCH TEST
- CVN = 15 FT-LBS @ 40°F "H" FREQ FOR THICKNESS UP 2".
- CVN = 20 FT-LBS @ 40°F "H" FREQ FOR THICKNESS OVER 2".

NO.	DATE	REMARKS	BY

REVISIONS

Veritas STEEL
2-EAU CLAIRE, WI 3-WAUSAU, WI 4-PALATKA, FL
TENCA 1605

STRUCTURE	CUY-010-1976L, OH-10 WESTBOUND OVER GCRTA BLUE AND GREEN LINES
LOCATION	CLEVELAND, OHIO CUYAHOGA COUNTY
PROJECT NO.	17-3000
ENGINEER	MICHAEL BAKER INTERNATIONAL
CONTRACTOR	KOKOSING
ITEM	FLANGE DIAGRAM
SURFACE PREP.	SEE P201 OPEN HOLES 1 1/16"Ø (U.N.O.)
PAINT	SEE P201

APPROVAL	DRAWN AM 06/07/19	SHEET NO.	PLANT	ORDER NO.
SHOP	CHECKED SA 06/21/19	BG206B	3	317023A-20

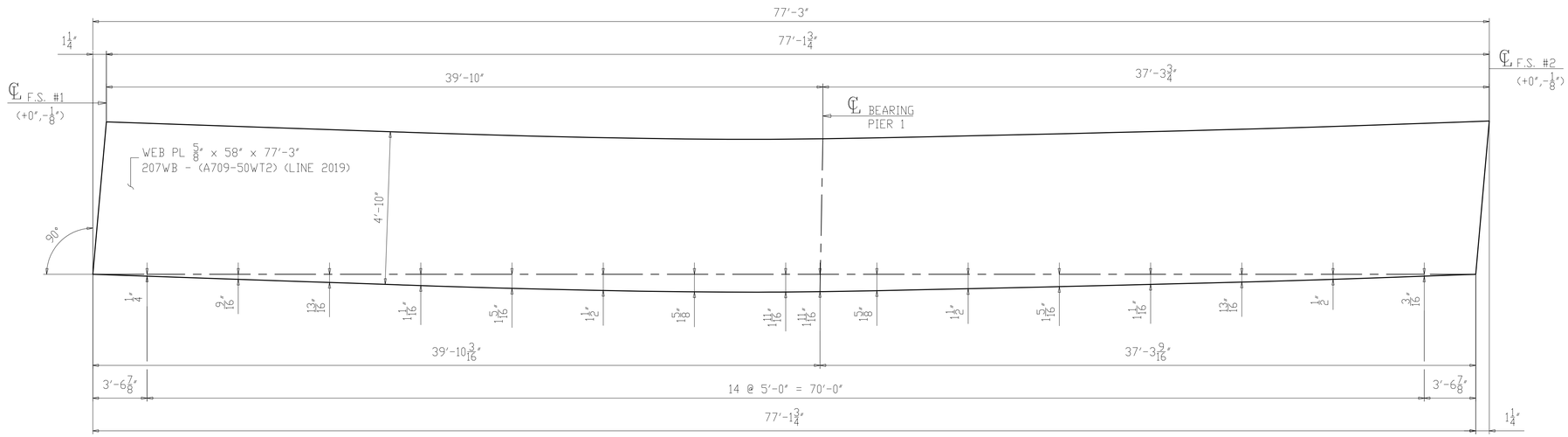

CAMBER DIAGRAM FOR 207C2
(DEVELOPED)

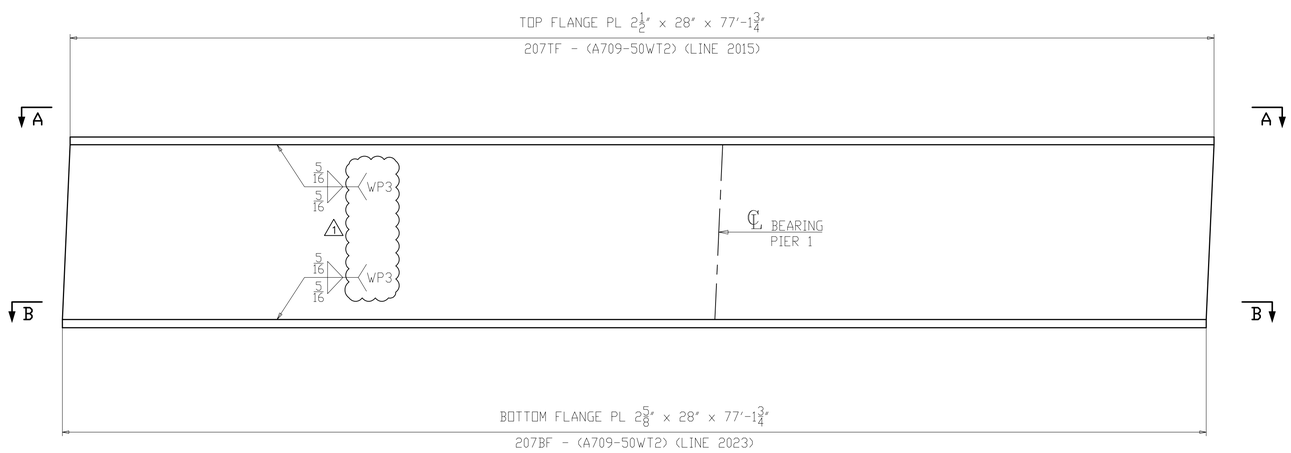

FLANGE DIAGRAM FOR 207C2

NOTES:
1. FOR GENERAL NOTES & WELD DETAILS "WB" & "FA" SEE SHEET GN201.
2. ALL MATERIAL A709-50WT2 (UN)
3. T2 - DENOTES MATERIAL SUBJECT TO CHARPY V-NOTCH TEST
- CVN = 15 FT-LBS @ 40°F "H" FREQ FOR THICKNESS UP 2".
- CVN = 20 FT-LBS @ 40°F "H" FREQ FOR THICKNESS OVER 2".

NO.	DATE	REMARKS	BY
1	10/10/19	WELD PROCEDURE # ADDED	DP

REVISIONS

Veritas STEEL
2-EAU CLAIRE, WI 3-WAUSAU, WI 4-PALATKA, FL
IAS NCA 1605

STRUCTURE	CUY-010-1976L, OH-10 WESTBOUND OVER GCRTA BLUE AND GREEN LINES
LOCATION	CLEVELAND, OHIO CUYAHOGA COUNTY
PROJECT NO.	17-3000
ENGINEER	MICHAEL BAKER INTERNATIONAL
CONTRACTOR	KOKOSING
ITEM	CAMBER & FLANGES DIAGRAM
SURFACE PREP.	SEE P201
OPEN HOLES	1 1/16"Ø (U.N.O.)
PAINT	SEE P201

APPROVAL	DRAWN AM 06/07/19	SHEET NO.	PLANT	ORDER NO.
SHOP	CHECKED SA 06/21/19	BG207AB	3	317023A-20

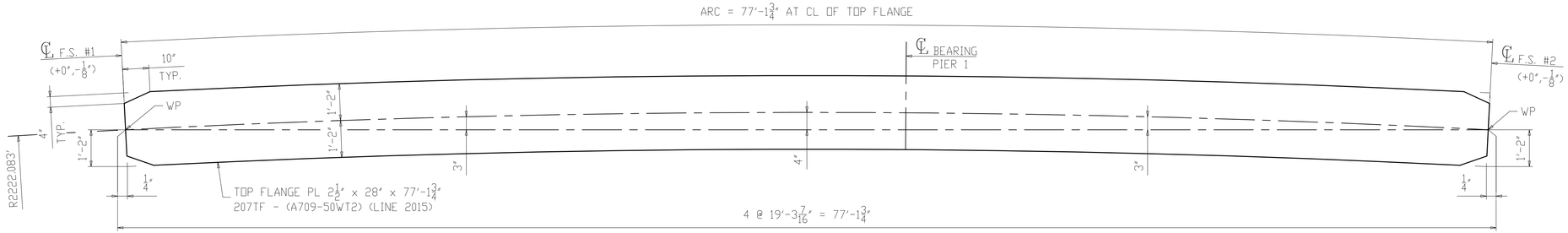

SECTION A-A
(TOP FLANGE)

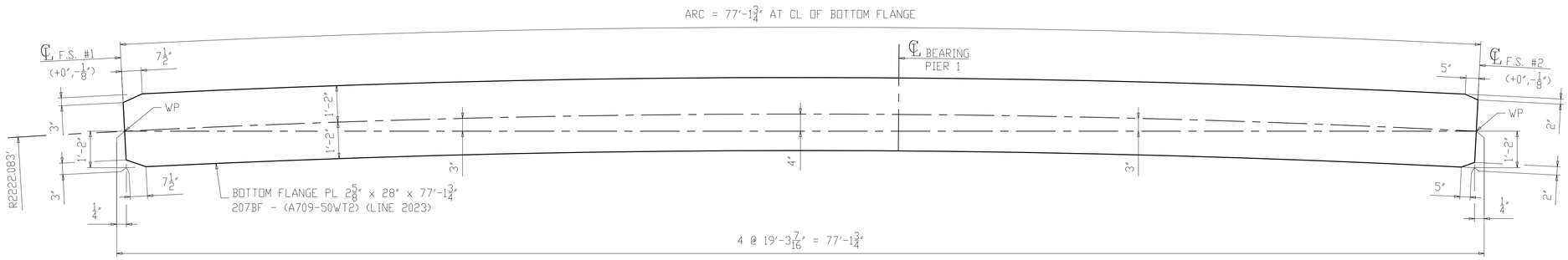

SECTION B-B
(BOTTOM FLANGE)

NOTES:
1. FOR GENERAL NOTES & WELD DETAILS "WB" & "FA" SEE SHEET GN201.
2. ALL MATERIAL A709-50WT2 (UN)
3. T2 - DENOTES MATERIAL SUBJECT TO CHARPY V-NOTCH TEST
- CVN = 15 FT-LBS @ 40°F "H" FREQ FOR THICKNESS UP 2".
- CVN = 20 FT-LBS @ 40°F "H" FREQ FOR THICKNESS OVER 2".

NO.	DATE	REMARKS	BY
△			

REVISIONS

Veritas STEEL
2-EAU CLAIRE, WI 3-WAUSAU, WI 4-PALATKA, FL
IENCA 1605

STRUCTURE	CUY-010-1976L, OH-10 WESTBOUND OVER GCRTA BLUE AND GREEN LINES
LOCATION	CLEVELAND, OHIO CUYAHOGA COUNTY
PROJECT NO.	17-3000
ENGINEER	MICHAEL BAKER INTERNATIONAL
CONTRACTOR	KOKOSING
ITEM	FLANGE DIAGRAM
SURFACE PREP.	SEE P201 OPEN HOLES 1 1/16"Ø (U.N.O.)
PAINT	SEE P201

APPROVAL	DRAWN AM 06/07/19	SHEET NO.	PLANT	ORDER NO.
SHOP	CHECKED SA 06/21/19	BG207B	3	317023A-20

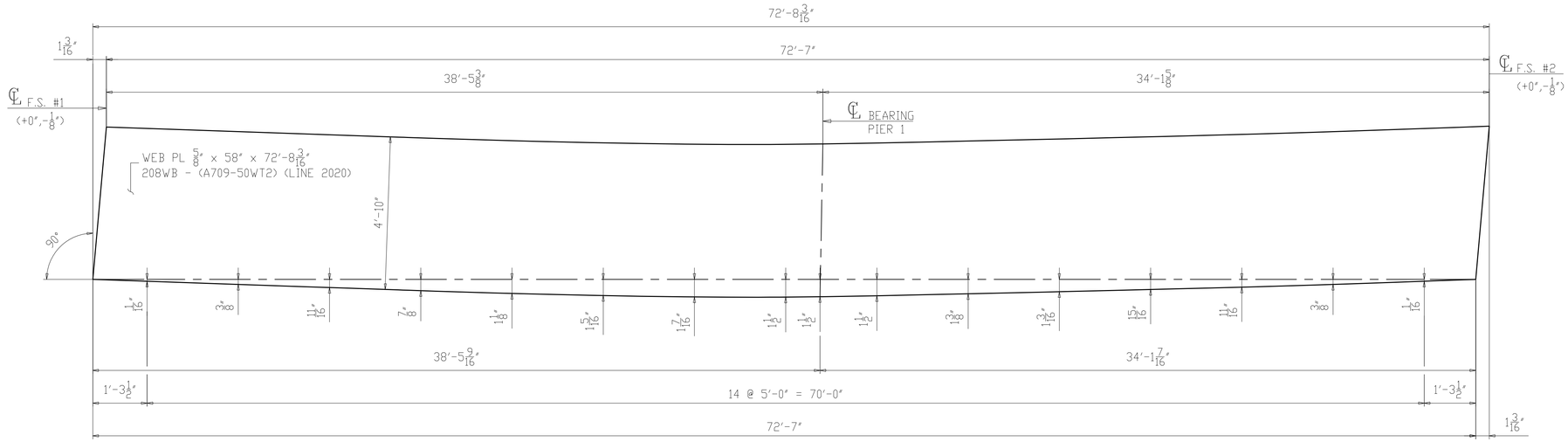

CAMBER DIAGRAM FOR 208D2
(DEVELOPED)

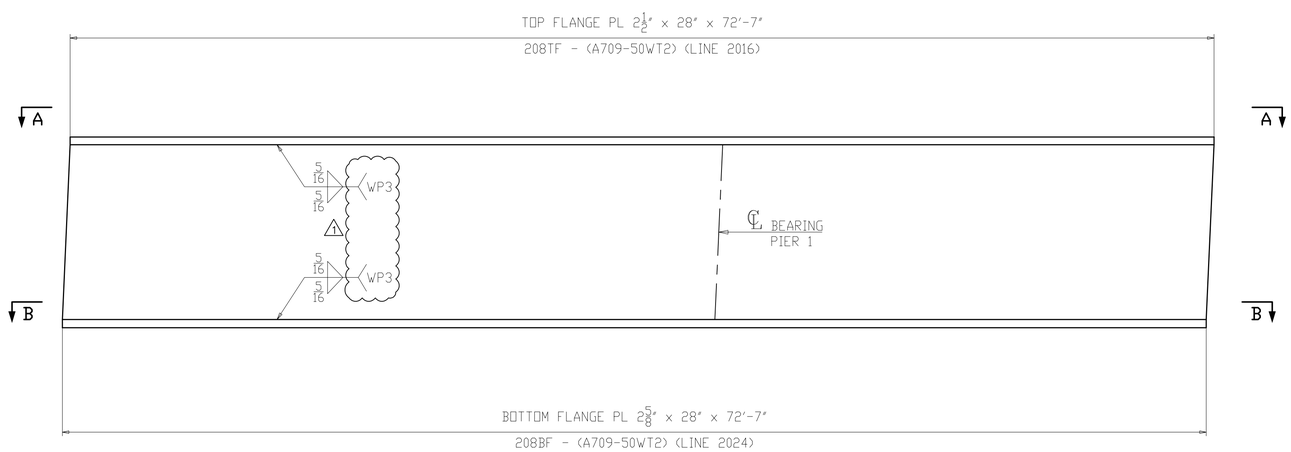

FLANGE DIAGRAM FOR 208D2

NOTES:
1. FOR GENERAL NOTES & WELD DETAILS "WB" & "FA" SEE SHEET GN201.
2. ALL MATERIAL A709-50WT2 (UN)
3. T2 - DENOTES MATERIAL SUBJECT TO CHARPY V-NOTCH TEST
- CVN = 15 FT-LBS @ 40°F "H" FREQ FOR THICKNESS UP 2".
- CVN = 20 FT-LBS @ 40°F "H" FREQ FOR THICKNESS OVER 2".

NO.	DATE	REMARKS	BY
1	10/10/19	WELD PROCEDURE # ADDED	DP

REVISIONS

Veritas STEEL
2-EAU CLAIRE, WI 3-WAUSAU, WI 4-PALATKA, FL
IAS NDT 1605

STRUCTURE	CUY-010-1976L, OH-10 WESTBOUND OVER GCRTA BLUE AND GREEN LINES
LOCATION	CLEVELAND, OHIO CUYAHOGA COUNTY
PROJECT NO.	17-3000
ENGINEER	MICHAEL BAKER INTERNATIONAL
CONTRACTOR	KOKOSING
ITEM	CAMBER & FLANGES DIAGRAM
SURFACE PREP.	SEE P201
OPEN HOLES	1 1/16"Ø (U.N.O.)
PAINT	SEE P201

APPROVAL	DRAWN AM 06/07/19	SHEET NO.	PLANT	ORDER NO.
SHOP	CHECKED SA 06/21/19	BG208AB	3	317023A-20

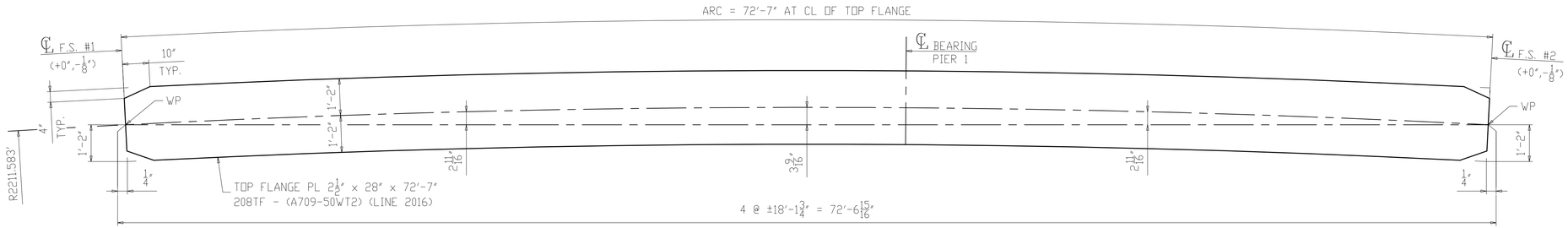

SECTION A-A
(TOP FLANGE)

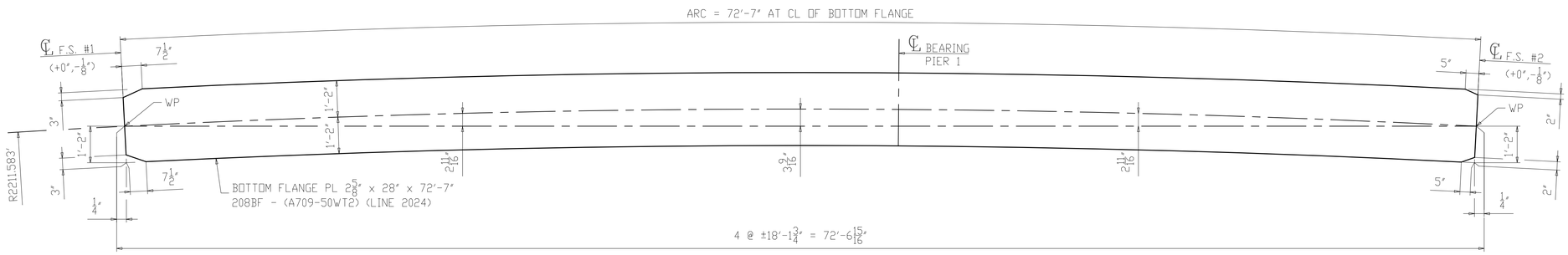

SECTION B-B
(BOTTOM FLANGE)

NOTES:
1. FOR GENERAL NOTES & WELD DETAILS "WB" & "FA" SEE SHEET GN201.
2. ALL MATERIAL A709-50WT2 (UN)
3. T2 - DENOTES MATERIAL SUBJECT TO CHARPY V-NOTCH TEST
- CVN = 15 FT-LBS @ 40°F "H" FREQ FOR THICKNESS UP 2".
- CVN = 20 FT-LBS @ 40°F "H" FREQ FOR THICKNESS OVER 2".

NO.	DATE	REMARKS	BY
△			

REVISIONS

Veritas STEEL
2-EAU CLAIRE, WI 3-WAUSAU, WI 4-PALATKA, FL
IAS 1605

STRUCTURE	CUY-010-1976L, OH-10 WESTBOUND OVER GCRTA BLUE AND GREEN LINES
LOCATION	CLEVELAND, OHIO CUYAHOGA COUNTY
PROJECT NO.	17-3000
ENGINEER	MICHAEL BAKER INTERNATIONAL
CONTRACTOR	KOKOSING
ITEM	FLANGE DIAGRAM
SURFACE PREP.	SEE P201 OPEN HOLES 1 1/16"Ø (U.N.O.)
PAINT	SEE P201

APPROVAL	DRAWN AM 06/07/19	SHEET NO.	PLANT	ORDER NO.
SHOP	CHECKED SA 06/21/19	BG208B	3	317023A-20

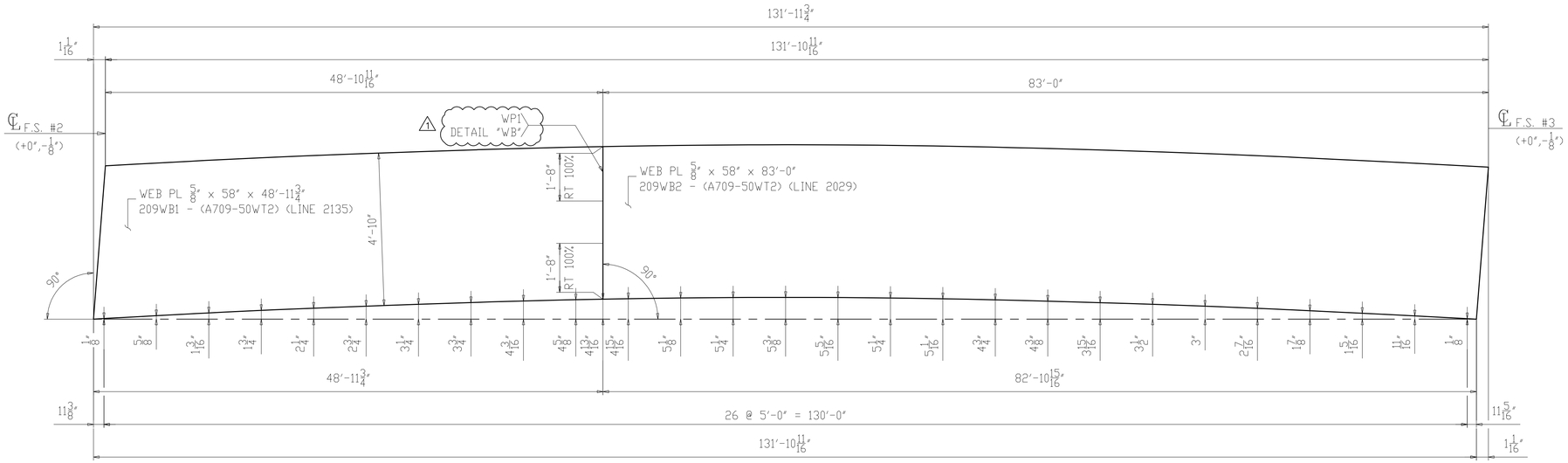

CAMBER DIAGRAM FOR 209A3
(DEVELOPED)

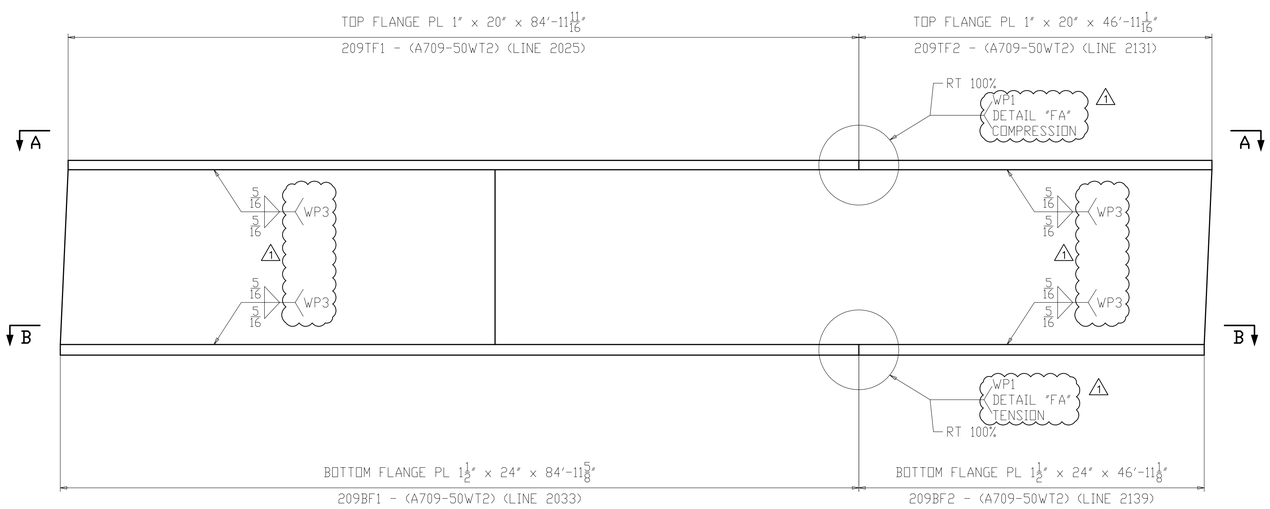

FLANGE DIAGRAM FOR 209A3

NOTES:
1. FOR GENERAL NOTES & WELD DETAILS "WB" & "FA" SEE SHEET GN201.
2. ALL MATERIAL A709-50WT2 (UN)
3. T2 - DENOTES MATERIAL SUBJECT TO CHARPY V-NOTCH TEST
- CVN = 15 FT-LBS @ 40°F "H" FREQ FOR THICKNESS UP 2".
- CVN = 20 FT-LBS @ 40°F "H" FREQ FOR THICKNESS OVER 2".

NO.	DATE	REMARKS	BY
1	10/10/19	WELD PROCEDURE # ADDED	DP

REVISIONS

Veritas STEEL
2-EAU CLAIRE, WI 3-WAUSAU, WI 4-PALATKA, FL
IAS NDT 1605

STRUCTURE	CUY-010-1976L, OH-10 WESTBOUND OVER GCRTA BLUE AND GREEN LINES
LOCATION	CLEVELAND, OHIO CUYAHOGA COUNTY
PROJECT NO.	17-3000
ENGINEER	MICHAEL BAKER INTERNATIONAL
CONTRACTOR	KOKOSING
ITEM	CAMBER & FLANGES DIAGRAM
SURFACE PREP.	SEE P201 OPEN HOLES 1 1/16"Ø (U.N.O.)
PAINT	SEE P201

APPROVAL	DRAWN AM 06/07/19	SHEET NO.	PLANT	ORDER NO.
SHOP	CHECKED SA 06/21/19	BG209AB	3	317023A-20

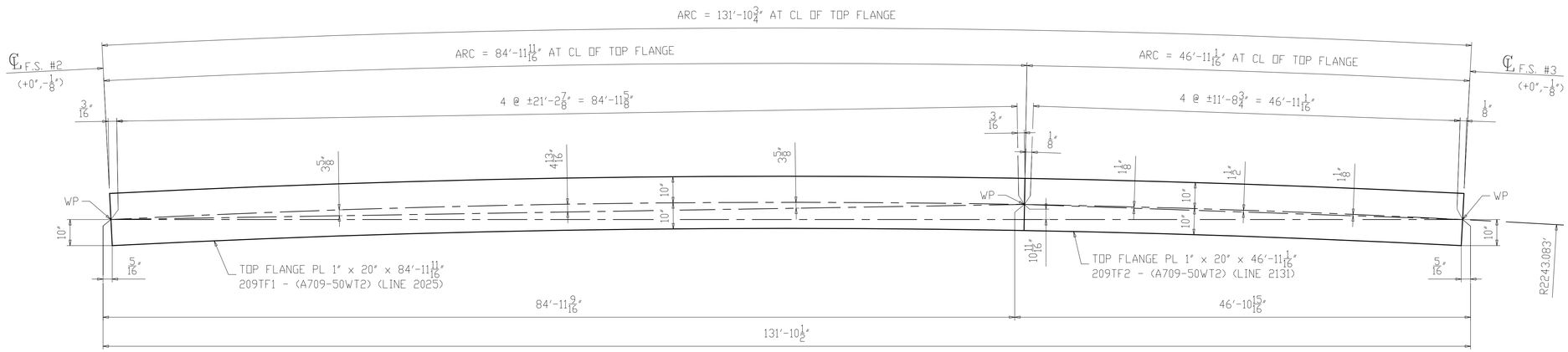

SECTION A-A
(TOP FLANGE)

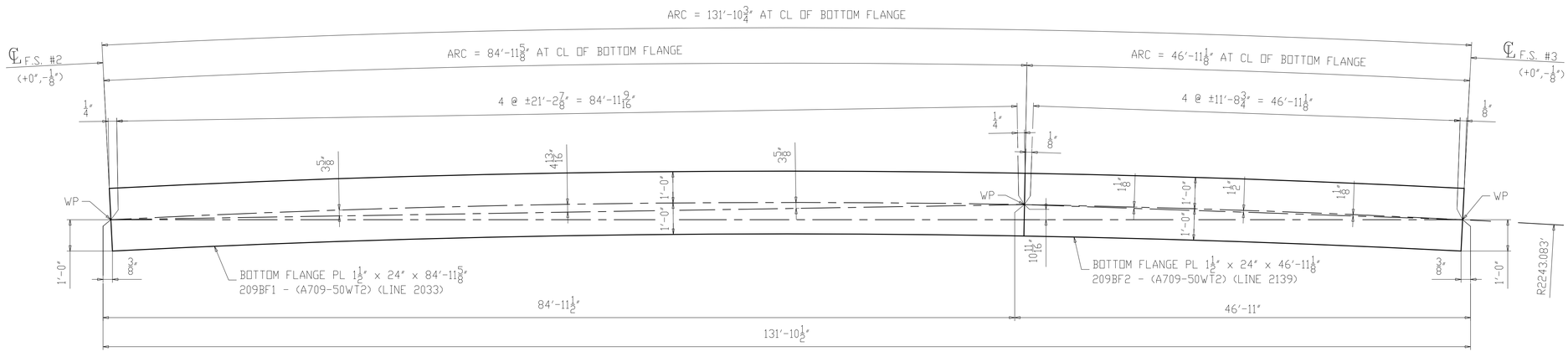

SECTION B-B
(BOTTOM FLANGE)

NOTES:
1. FOR GENERAL NOTES & WELD DETAILS "WB" & "FA" SEE SHEET GN201.
2. ALL MATERIAL A709-50WT2 (UN)
3. T2 - DENOTES MATERIAL SUBJECT TO CHARPY V-NOTCH TEST
- CVN = 15 FT-LBS @ 40°F "H" FREQ FOR THICKNESS UP 2".
- CVN = 20 FT-LBS @ 40°F "H" FREQ FOR THICKNESS OVER 2".

NO.	DATE	REMARKS	BY
△			

REVISIONS

Veritas STEEL
2-EAU CLAIRE, WI 3-WAUSAU, WI 4-PALATKA, FL
IENCA 1605

STRUCTURE	CUY-010-1976L, OH-10 WESTBOUND OVER GCRTA BLUE AND GREEN LINES
LOCATION	CLEVELAND, OHIO CUYAHOGA COUNTY
PROJECT NO.	17-3000
ENGINEER	MICHAEL BAKER INTERNATIONAL
CONTRACTOR	KOKOSING
ITEM	FLANGE DIAGRAM
SURFACE PREP.	SEE P201 OPEN HOLES 1 1/16"Ø (U.N.O.)
PAINT	SEE P201

APPROVAL	DRAWN AM 06/07/19	SHEET NO.	PLANT	ORDER NO.
SHOP	CHECKED SA 06/21/19	BG209B	3	317023A-20

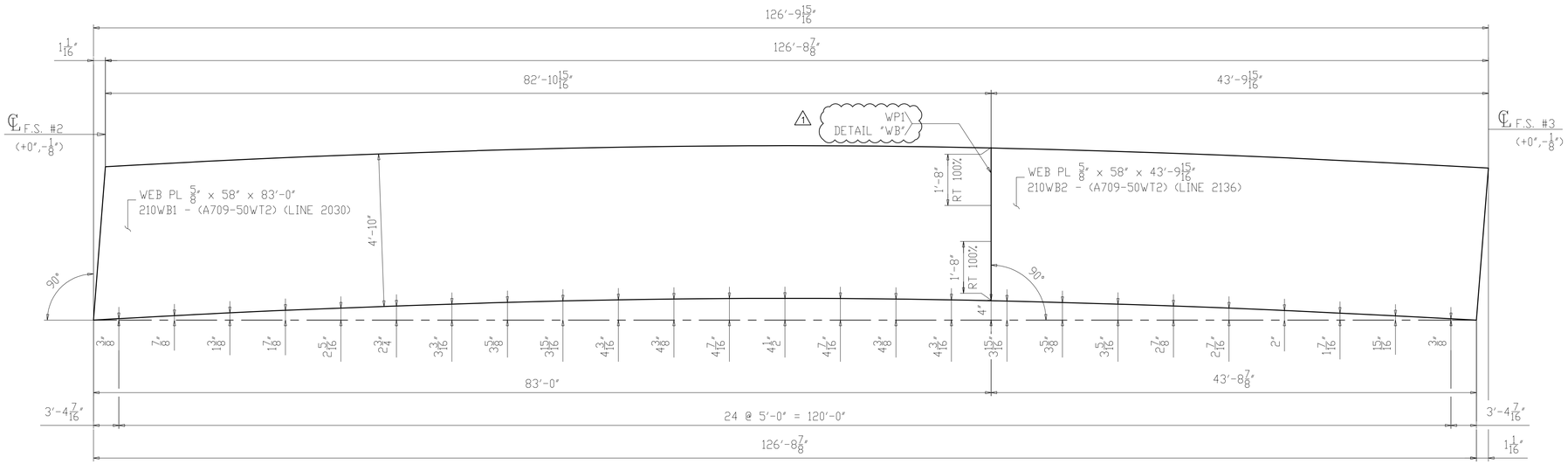

CAMBER DIAGRAM FOR 210B3
(DEVELOPED)

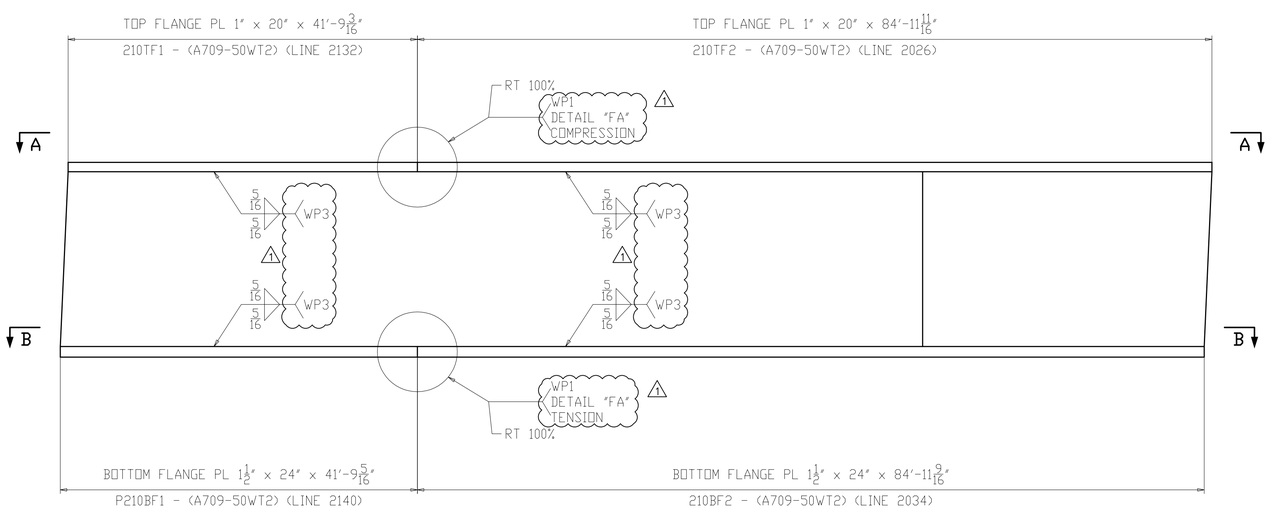

FLANGE DIAGRAM FOR 210B3

NOTES:
1. FOR GENERAL NOTES & WELD DETAILS "WB" & "FA" SEE SHEET GN201.
2. ALL MATERIAL A709-50WT2 (UN)
3. T2 - DENOTES MATERIAL SUBJECT TO CHARPY V-NOTCH TEST
- CVN = 15 FT-LBS @ 40°F "H" FREQ FOR THICKNESS UP 2".
- CVN = 20 FT-LBS @ 40°F "H" FREQ FOR THICKNESS OVER 2".

NO.	DATE	REMARKS	BY
1	10/10/19	WELD PROCEDURE # ADDED	DP

REVISIONS

Veritas STEEL
2-EAU CLAIRE, WI 3-WAUSAU, WI 4-PALATKA, FL
TENCA 1605

STRUCTURE: CUY-010-1976L, OH-10 WESTBOUND OVER GCRTA BLUE AND GREEN LINES
LOCATION: CLEVELAND, OHIO CUYAHOGA COUNTY
PROJECT NO.: 17-3000
ENGINEER: MICHAEL BAKER INTERNATIONAL
CONTRACTOR: KOKOSING

ITEM: CAMBER & FLANGES DIAGRAM
SURFACE PREP.: SEE P201 OPEN HOLES: 1 1/16"Ø (U.N.O.)
PAINT: SEE P201

APPROVAL	DRAWN AM 06/07/19	SHEET NO.	PLANT	ORDER NO.
SHOP	CHECKED SA 06/21/19	BG210AB	3	317023A-20

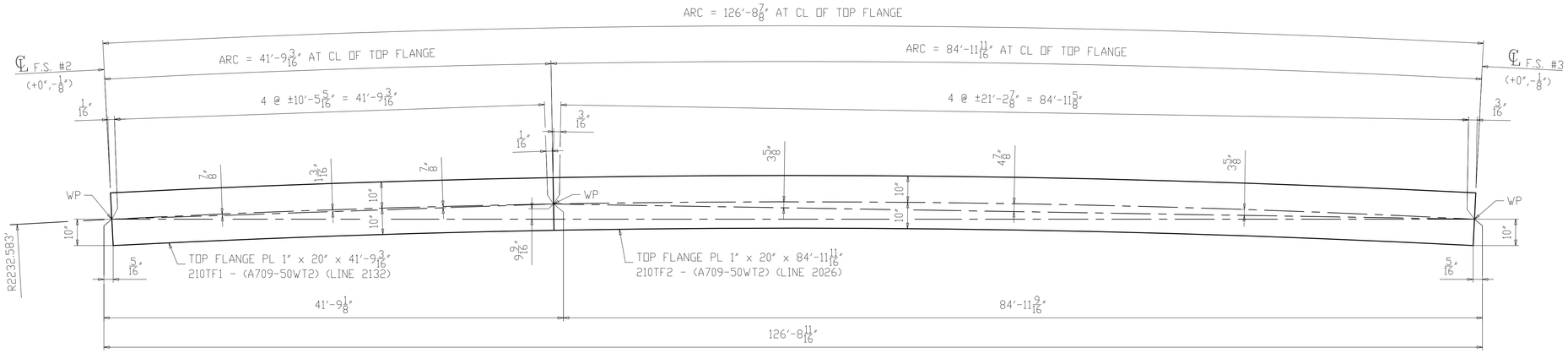

SECTION A-A
(TOP FLANGE)

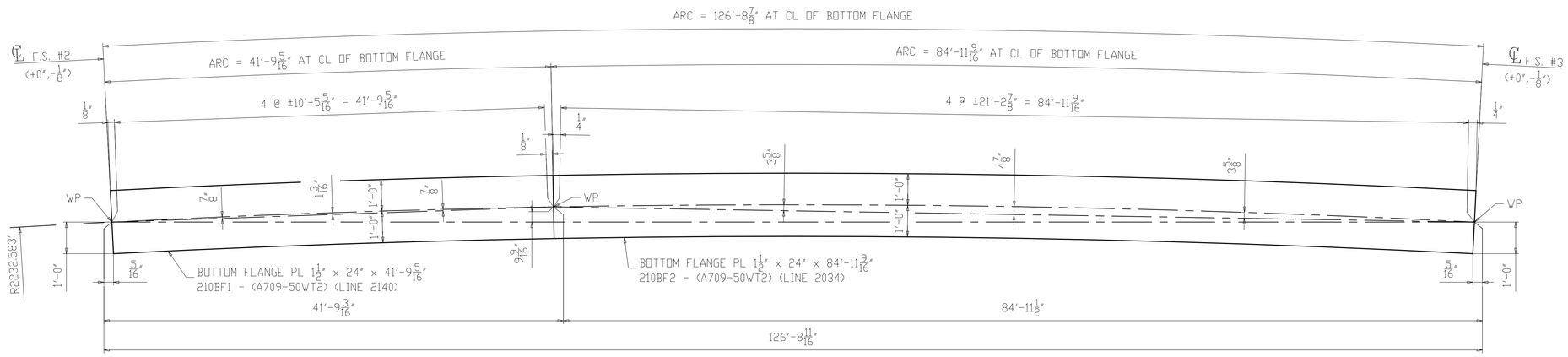

SECTION B-B
(BOTTOM FLANGE)

NOTES:
1. FOR GENERAL NOTES & WELD DETAILS "WB" & "FA" SEE SHEET GN201.
2. ALL MATERIAL A709-50WT2 (UN)
3. T2 - DENOTES MATERIAL SUBJECT TO CHARPY V-NOTCH TEST
- CVN = 15 FT-LBS @ 40°F "H" FREQ FOR THICKNESS UP 2".
- CVN = 20 FT-LBS @ 40°F "H" FREQ FOR THICKNESS OVER 2".

NO.	DATE	REMARKS	BY
△			

REVISIONS

Veritas STEEL
2-EAU CLAIRE, WI 3-WAUSAU, WI 4-PALATKA, FL
IENCA 1605

STRUCTURE	CUY-010-1976L, OH-10 WESTBOUND OVER GCRTA BLUE AND GREEN LINES
LOCATION	CLEVELAND, OHIO CUYAHOGA COUNTY
PROJECT NO.	17-3000
ENGINEER	MICHAEL BAKER INTERNATIONAL
CONTRACTOR	KOKOSING
ITEM	FLANGE DIAGRAM
SURFACE PREP.	SEE P201 OPEN HOLES 1 1/16"Ø (U.N.O.)
PAINT	SEE P201

APPROVAL	DRAWN AM 06/07/19	SHEET NO.	PLANT	ORDER NO.
SHOP	CHECKED SA 06/21/19	BG210B	3	317023A-20

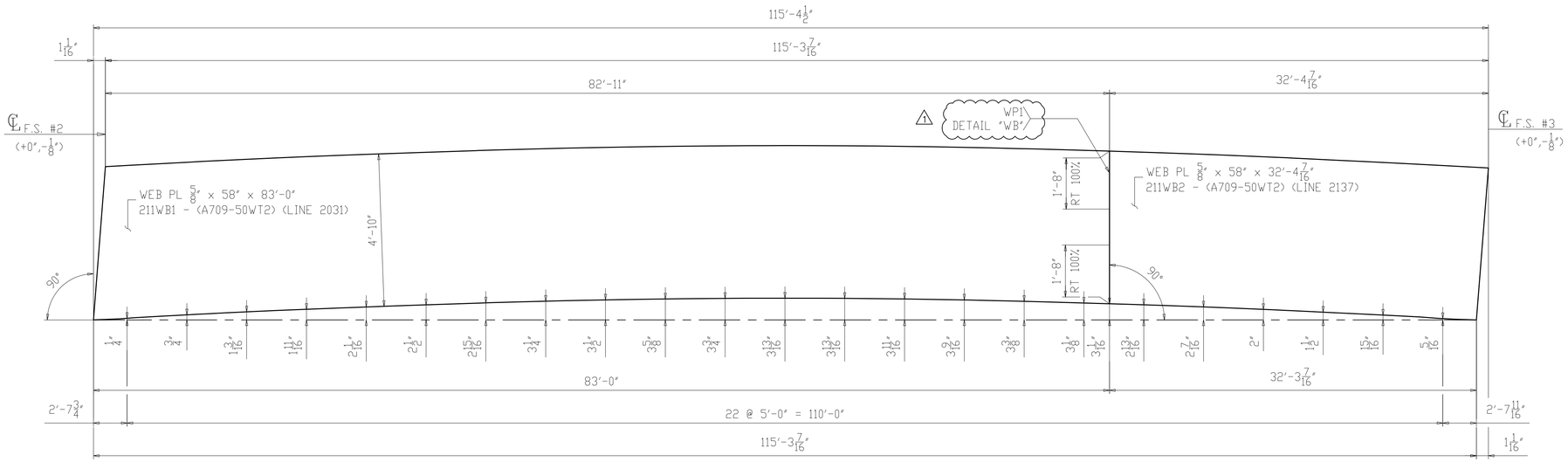

CAMBER DIAGRAM FOR 211C3
(DEVELOPED)

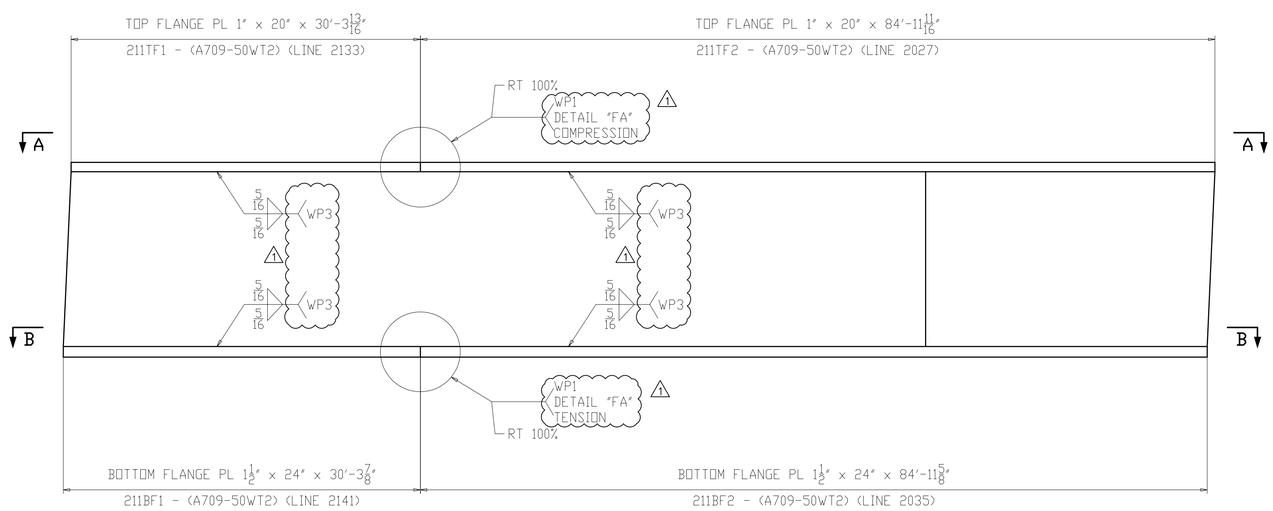

FLANGE DIAGRAM FOR 211C3

NOTES:
1. FOR GENERAL NOTES & WELD DETAILS "WB" & "FA" SEE SHEET GN201.
2. ALL MATERIAL A709-50WT2 (UN)
3. T2 - DENOTES MATERIAL SUBJECT TO CHARPY V-NOTCH TEST
- CVN = 15 FT-LBS @ 40°F "H" FREQ FOR THICKNESS UP 2".
- CVN = 20 FT-LBS @ 40°F "H" FREQ FOR THICKNESS OVER 2".

NO.	DATE	REMARKS	BY
1	10/10/19	WELD PROCEDURE # ADDED	DP

REVISIONS

Veritas STEEL
2-EAU CLAIRE, WI 3-WAUSAU, WI 4-PALATKA, FL
TENCA 1605

STRUCTURE: CUY-010-1976L, OH-10 WESTBOUND OVER GCRTA BLUE AND GREEN LINES
LOCATION: CLEVELAND, OHIO CUYAHOGA COUNTY
PROJECT NO.: 17-3000
ENGINEER: MICHAEL BAKER INTERNATIONAL
CONTRACTOR: KOKOSING

ITEM: CAMBER & FLANGES DIAGRAM
SURFACE PREP.: SEE P201 OPEN HOLES: 1 1/16"Ø (U.N.O.)
PAINT: SEE P201

APPROVAL	DRAWN AM 06/07/19	SHEET NO.	PLANT	ORDER NO.
SHOP	CHECKED SA 06/21/19	BG211AB	3	317023A-20

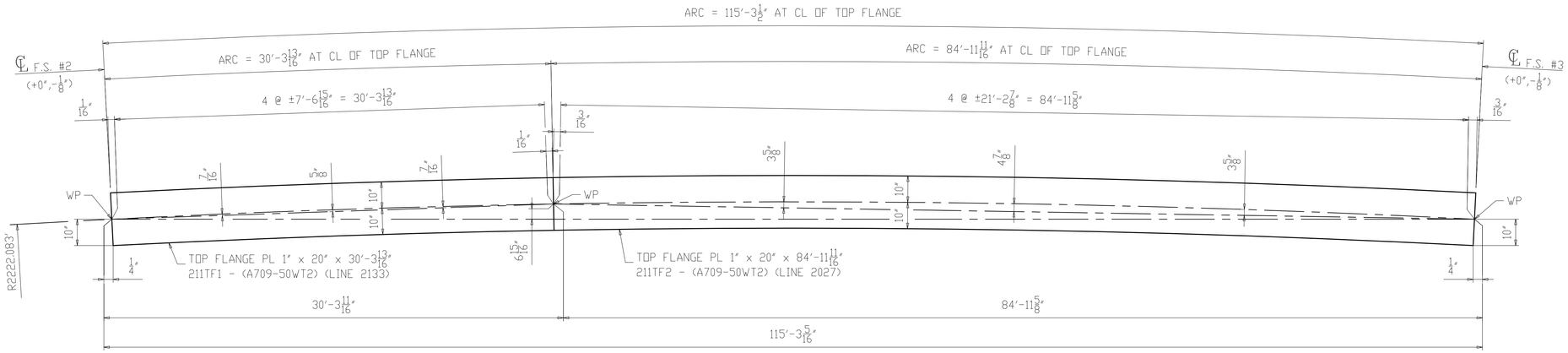

SECTION A-A
(TOP FLANGE)

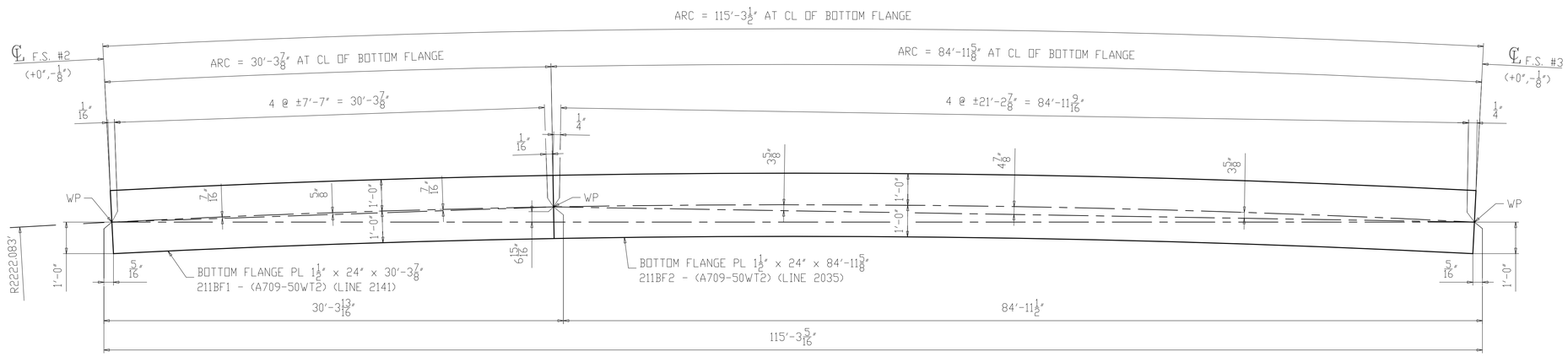

SECTION B-B
(BOTTOM FLANGE)

NOTES:
1. FOR GENERAL NOTES & WELD DETAILS "WB" & "FA" SEE SHEET GN201.
2. ALL MATERIAL A709-50WT2 (UN)
3. T2 - DENOTES MATERIAL SUBJECT TO CHARPY V-NOTCH TEST
- CVN = 15 FT-LBS @ 40°F "H" FREQ FOR THICKNESS UP 2".
- CVN = 20 FT-LBS @ 40°F "H" FREQ FOR THICKNESS OVER 2".

NO.	DATE	REMARKS	BY
△			

REVISIONS

Veritas STEEL
2-EAU CLAIRE, WI 3-WAUSAU, WI 4-PALATKA, FL
IENCA 1605

STRUCTURE	CUY-010-1976L, OH-10 WESTBOUND OVER GCRTA BLUE AND GREEN LINES
LOCATION	CLEVELAND, OHIO CUYAHOGA COUNTY
PROJECT NO.	17-3000
ENGINEER	MICHAEL BAKER INTERNATIONAL
CONTRACTOR	KOKOSING
ITEM	FLANGE DIAGRAM
SURFACE PREP.	SEE P201 OPEN HOLES 1 1/16"Ø (U.N.O.)
PAINT	SEE P201

APPROVAL	DRAWN AM 06/07/19	SHEET NO.	PLANT	ORDER NO.
SHOP	CHECKED SA 06/21/19	BG211B	3	317023A-20

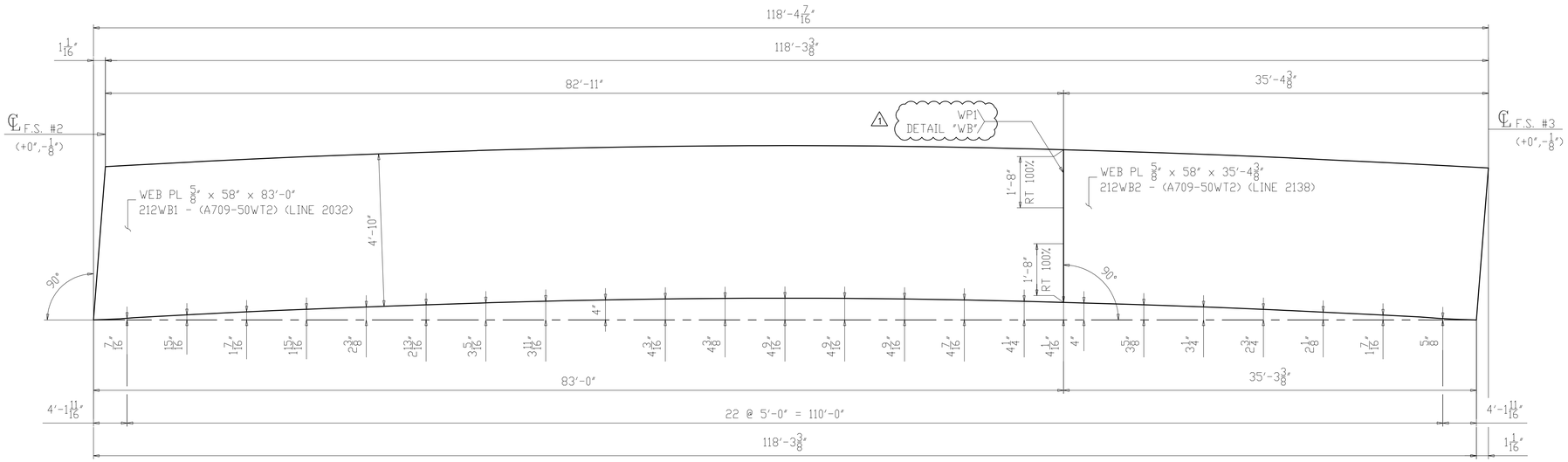

CAMBER DIAGRAM FOR 212D3
(DEVELOPED)

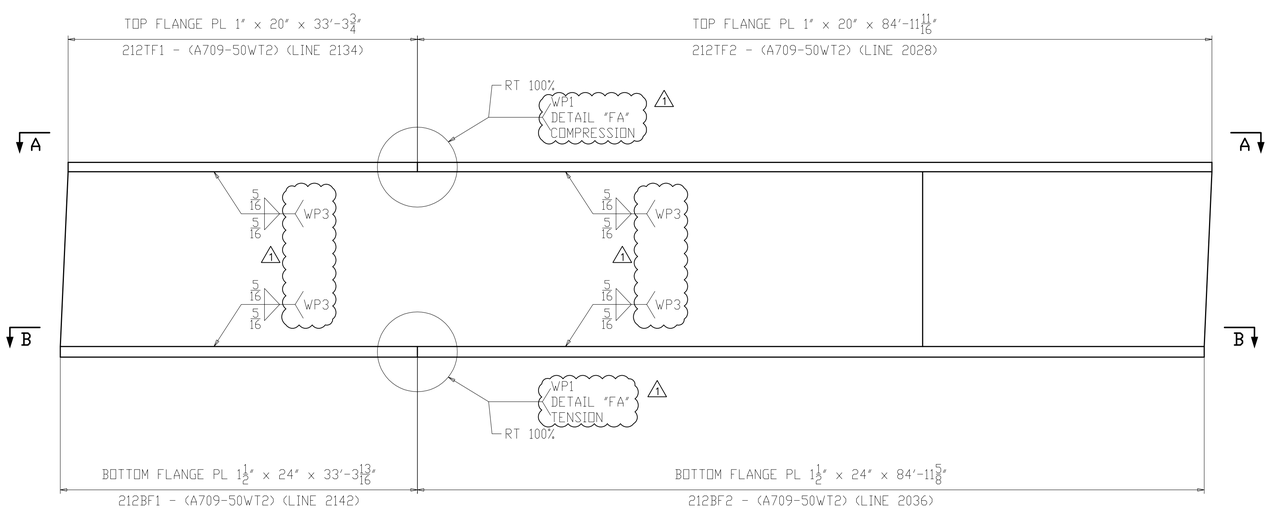

FLANGE DIAGRAM FOR 212D3

NOTES:
1. FOR GENERAL NOTES & WELD DETAILS "WB" & "FA" SEE SHEET GN201.
2. ALL MATERIAL A709-50WT2 (UN)
3. T2 - DENOTES MATERIAL SUBJECT TO CHARPY V-NOTCH TEST
- CVN = 15 FT-LBS @ 40°F "H" FREQ FOR THICKNESS UP 2".
- CVN = 20 FT-LBS @ 40°F "H" FREQ FOR THICKNESS OVER 2".

NO.	DATE	REMARKS	BY
1	10/10/19	WELD PROCEDURE # ADDED	DP

REVISIONS

Veritas STEEL
2-EAU CLAIRE, WI 3-WAUSAU, WI 4-PALATKA, FL
IAS NDT 1605

STRUCTURE	CUY-010-1976L, OH-10 WESTBOUND OVER GCRTA BLUE AND GREEN LINES
LOCATION	CLEVELAND, OHIO CUYAHOGA COUNTY
PROJECT NO.	17-3000
ENGINEER	MICHAEL BAKER INTERNATIONAL
CONTRACTOR	KOKOSING
ITEM	CAMBER & FLANGES DIAGRAM
SURFACE PREP.	SEE P201 OPEN HOLES 1 1/16"Ø (U.N.O.)
PAINT	SEE P201

APPROVAL	DRAWN AM 06/07/19	SHEET NO.	PLANT	ORDER NO.
SHOP	CHECKED SA 06/21/19	BG212AB	3	317023A-20

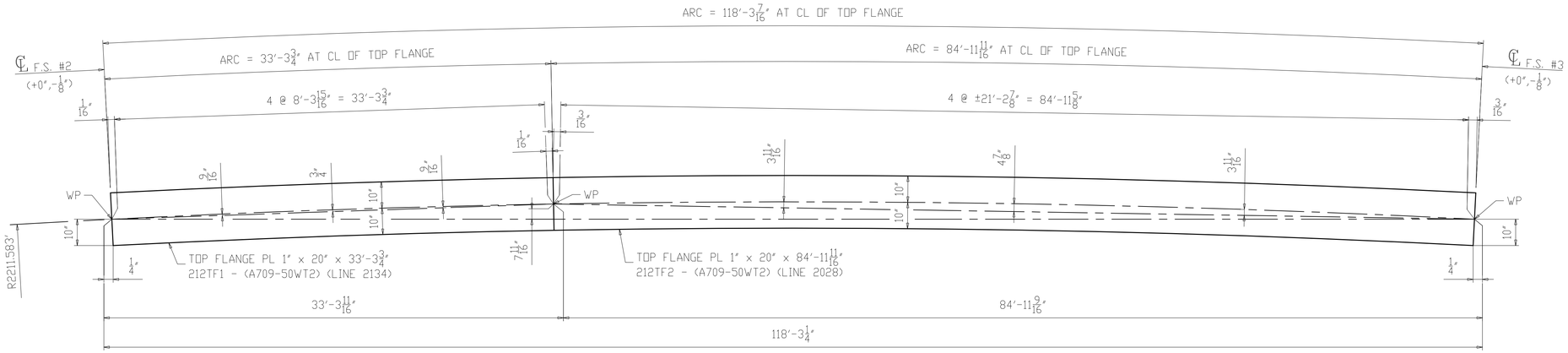

SECTION A-A
(TOP FLANGE)

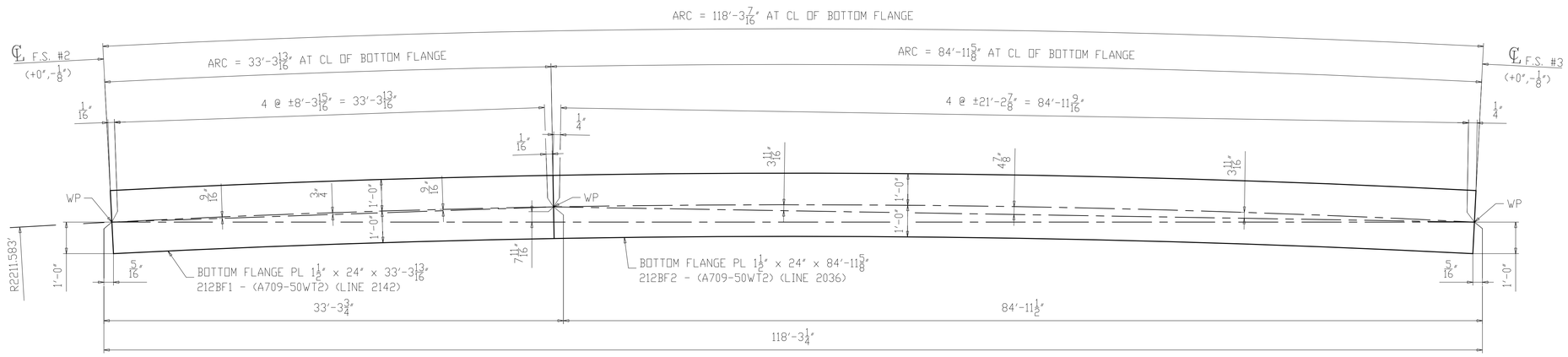

SECTION B-B
(BOTTOM FLANGE)

NOTES:
1. FOR GENERAL NOTES & WELD DETAILS "WB" & "FA" SEE SHEET GN201.
2. ALL MATERIAL A709-50WT2 (UN)
3. T2 - DENOTES MATERIAL SUBJECT TO CHARPY V-NOTCH TEST
- CVN = 15 FT-LBS @ 40°F "H" FREQ FOR THICKNESS UP 2".
- CVN = 20 FT-LBS @ 40°F "H" FREQ FOR THICKNESS OVER 2".

NO.	DATE	REMARKS	BY
△			

REVISIONS

Veritas STEEL
2-EAU CLAIRE, WI 3-WAUSAU, WI 4-PALATKA, FL
IENCA 1605

STRUCTURE	CUY-010-1976L, OH-10 WESTBOUND OVER GCRTA BLUE AND GREEN LINES
LOCATION	CLEVELAND, OHIO CUYAHOGA COUNTY
PROJECT NO.	17-3000
ENGINEER	MICHAEL BAKER INTERNATIONAL
CONTRACTOR	KOKOSING
ITEM	FLANGE DIAGRAM
SURFACE PREP.	SEE P201 OPEN HOLES 1 1/16"Ø (U.N.O.)
PAINT	SEE P201

APPROVAL	DRAWN AM 06/07/19	SHEET NO.	PLANT	ORDER NO.
SHOP	CHECKED SA 06/21/19	BG212B	3	317023A-20

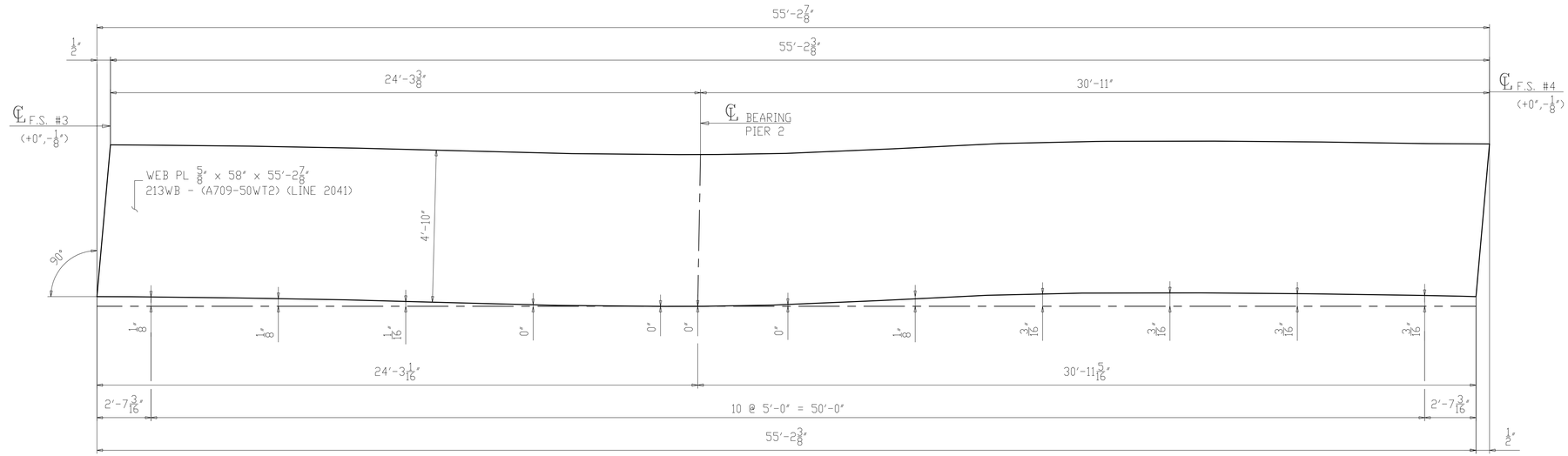

CAMBER DIAGRAM FOR 213A4
(DEVELOPED)

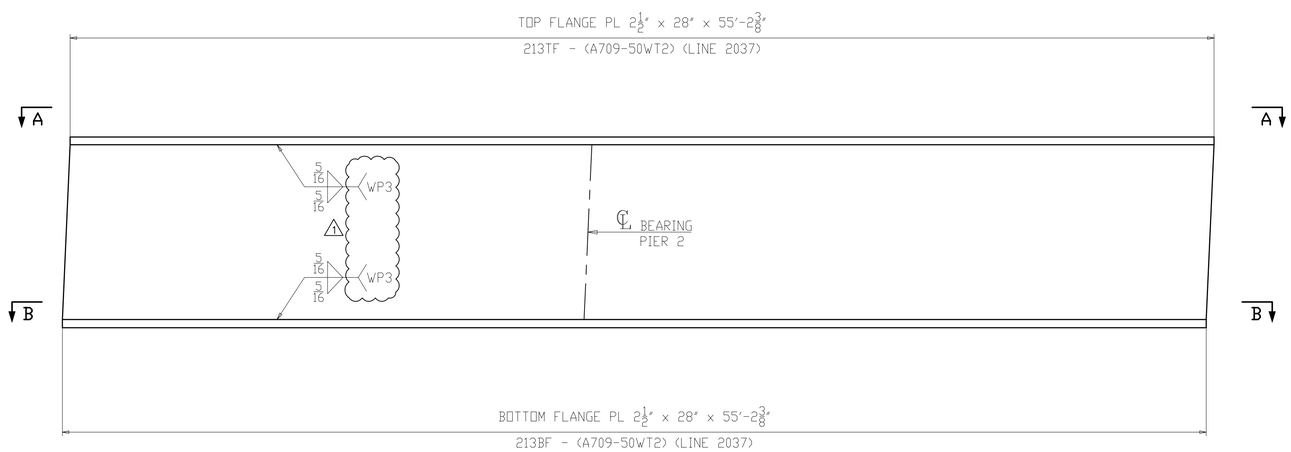

FLANGE DIAGRAM FOR 213A4

NOTES:
1. FOR GENERAL NOTES & WELD DETAILS "WB" & "FA" SEE SHEET GN201.
2. ALL MATERIAL A709-50WT2 (UN)
3. T2 - DENOTES MATERIAL SUBJECT TO CHARPY V-NOTCH TEST
- CVN = 15 FT-LBS @ 40°F "H" FREQ FOR THICKNESS UP 2".
- CVN = 20 FT-LBS @ 40°F "H" FREQ FOR THICKNESS OVER 2".

NO.	DATE	REMARKS	BY
1	10/10/19	WELD PROCEDURE # ADDED	DP

REVISIONS

Veritas STEEL
2-EAU CLAIRE, WI 3-WAUSAU, WI 4-PALATKA, FL
IAENCA 1605

STRUCTURE	CUY-010-1976L, OH-10 WESTBOUND OVER GCRTA BLUE AND GREEN LINES
LOCATION	CLEVELAND, OHIO CUYAHOGA COUNTY
PROJECT NO.	17-3000
ENGINEER	MICHAEL BAKER INTERNATIONAL
CONTRACTOR	KOKOSING
ITEM	CAMBER & FLANGES DIAGRAM
SURFACE PREP.	SEE P201
OPEN HOLES	1 1/16"Ø (U.N.O.)
PAINT	SEE P201

APPROVAL	DRAWN AM 06/07/19	SHEET NO.	PLANT	ORDER NO.
SHOP	CHECKED SA 06/21/19	BG213AB	3	317023A-20

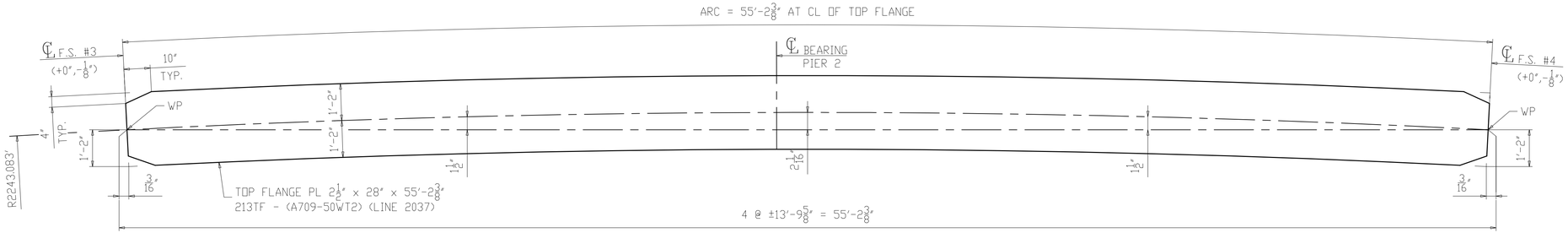

SECTION A-A
(TOP FLANGE)

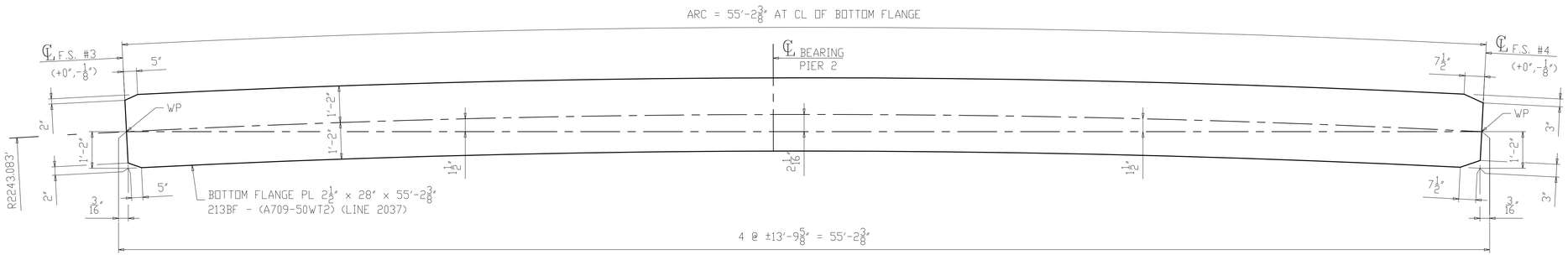

SECTION B-B
(BOTTOM FLANGE)

NOTES:
1. FOR GENERAL NOTES & WELD DETAILS "WB" & "FA" SEE SHEET GN201.
2. ALL MATERIAL A709-50WT2 (UN)
3. T2 - DENOTES MATERIAL SUBJECT TO CHARPY V-NOTCH TEST
- CVN = 15 FT-LBS @ 40°F "H" FREQ FOR THICKNESS UP 2".
- CVN = 20 FT-LBS @ 40°F "H" FREQ FOR THICKNESS OVER 2".

NO.	DATE	REMARKS	BY

REVISIONS

Veritas STEEL
2-EAU CLAIRE, WI 3-WAUSAU, WI 4-PALATKA, FL
TENCA 1605

STRUCTURE	CUY-010-1976L, OH-10 WESTBOUND OVER GCRTA BLUE AND GREEN LINES
LOCATION	CLEVELAND, OHIO CUYAHOGA COUNTY
PROJECT NO.	17-3000
ENGINEER	MICHAEL BAKER INTERNATIONAL
CONTRACTOR	KOKOSING
ITEM	FLANGE DIAGRAM
SURFACE PREP.	SEE P201 OPEN HOLES 1 1/16"Ø (U.N.O.)
PAINT	SEE P201

APPROVAL	DRAWN AM 06/07/19	SHEET NO.	PLANT	ORDER NO.
SHOP	CHECKED SA 06/21/19	BG213B	3	317023A-20

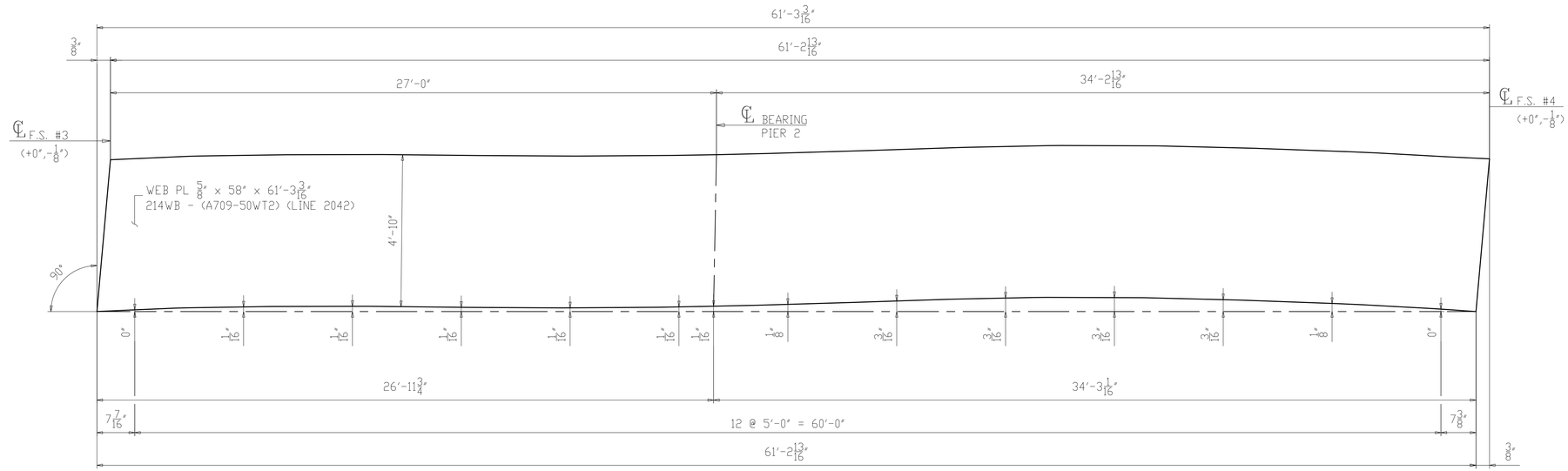

CAMBER DIAGRAM FOR 214B4
(DEVELOPED)

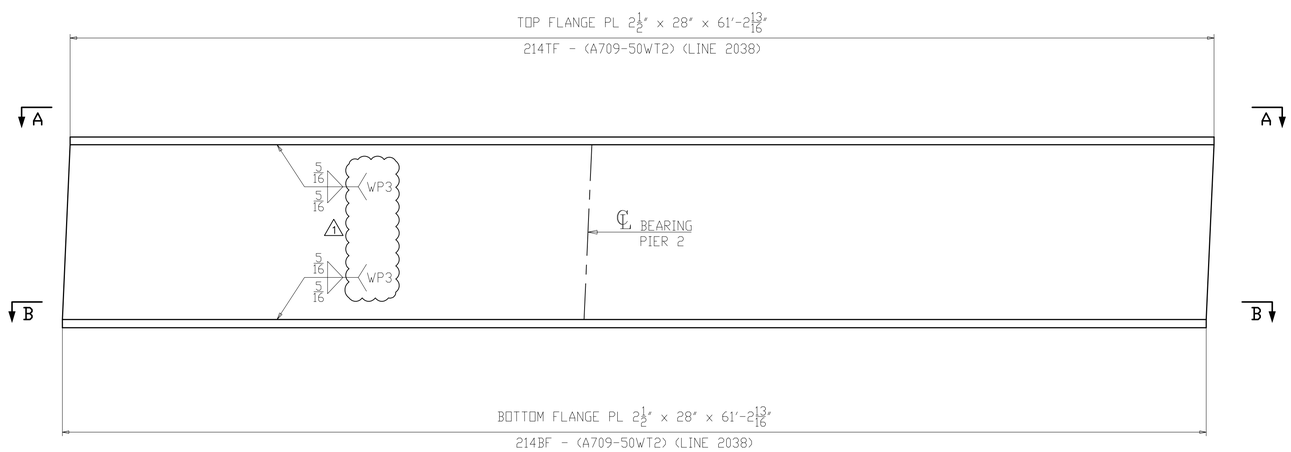

FLANGE DIAGRAM FOR 214B4

NOTES:
1. FOR GENERAL NOTES & WELD DETAILS "WB" & "FA" SEE SHEET GN201.
2. ALL MATERIAL A709-50WT2 (UN)
3. T2 - DENOTES MATERIAL SUBJECT TO CHARPY V-NOTCH TEST
- CVN = 15 FT-LBS @ 40°F "H" FREQ FOR THICKNESS UP 2".
- CVN = 20 FT-LBS @ 40°F "H" FREQ FOR THICKNESS OVER 2".

NO.	DATE	REMARKS	BY
1	10/10/19	WELD PROCEDURE # ADDED	DP

REVISIONS

Veritas STEEL
2-EAU CLAIRE, WI 3-WAUSAU, WI 4-PALATKA, FL
IAS NCA 1605

STRUCTURE	CUY-010-1976L, OH-10 WESTBOUND OVER GCRTA BLUE AND GREEN LINES
LOCATION	CLEVELAND, OHIO CUYAHOGA COUNTY
PROJECT NO.	17-3000
ENGINEER	MICHAEL BAKER INTERNATIONAL
CONTRACTOR	KOKOSING
ITEM	CAMBER & FLANGES DIAGRAM
SURFACE PREP.	SEE P201
OPEN HOLES	1 1/16"Ø (U.N.O.)
PAINT	SEE P201

APPROVAL	DRAWN AM 06/07/19	SHEET NO.	PLANT	ORDER NO.
SHOP	CHECKED SA 06/21/19	BG214AB	3	317023A-20

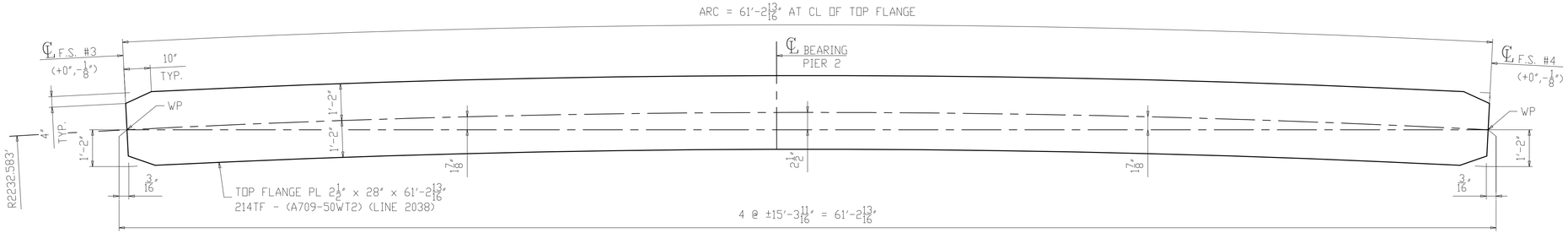

SECTION A-A
(TOP FLANGE)

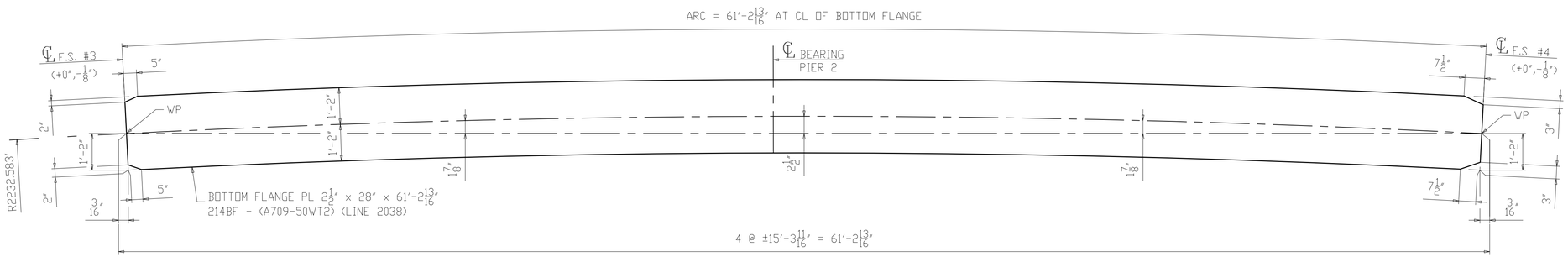

SECTION B-B
(BOTTOM FLANGE)

NOTES:
1. FOR GENERAL NOTES & WELD DETAILS "WB" & "FA" SEE SHEET GN201.
2. ALL MATERIAL A709-50WT2 (UN)
3. T2 - DENOTES MATERIAL SUBJECT TO CHARPY V-NOTCH TEST
- CVN = 15 FT-LBS @ 40°F "H" FREQ FOR THICKNESS UP 2".
- CVN = 20 FT-LBS @ 40°F "H" FREQ FOR THICKNESS OVER 2".

NO.	DATE	REMARKS	BY
△			

REVISIONS

Veritas STEEL
2-EAU CLAIRE, WI 3-WAUSAU, WI 4-PALATKA, FL
IAS 1605

STRUCTURE	CUY-010-1976L, OH-10 WESTBOUND OVER GCRTA BLUE AND GREEN LINES
LOCATION	CLEVELAND, OHIO CUYAHOGA COUNTY
PROJECT NO.	17-3000
ENGINEER	MICHAEL BAKER INTERNATIONAL
CONTRACTOR	KOKOSING
ITEM	FLANGE DIAGRAM
SURFACE PREP.	SEE P201 OPEN HOLES 1 1/16"Ø (U.N.O.)
PAINT	SEE P201

APPROVAL	DRAWN AM 06/07/19	SHEET NO.	PLANT	ORDER NO.
SHOP	CHECKED SA 06/21/19	BG214B	3	317023A-20

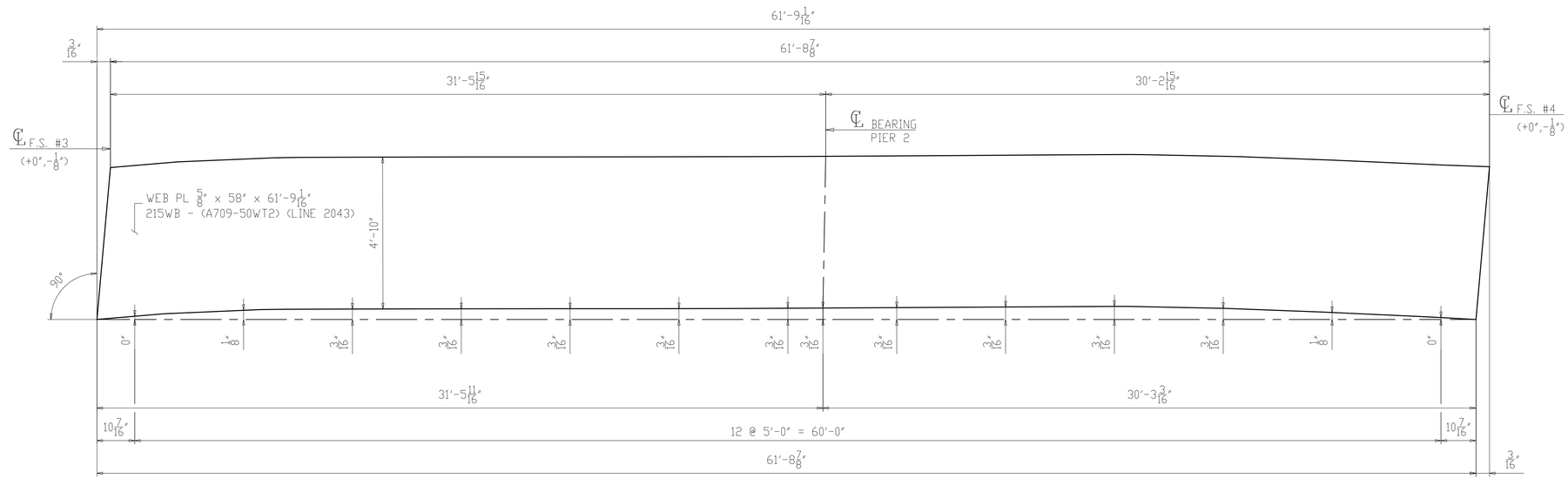

CAMBER DIAGRAM FOR 215C4
(DEVELOPED)

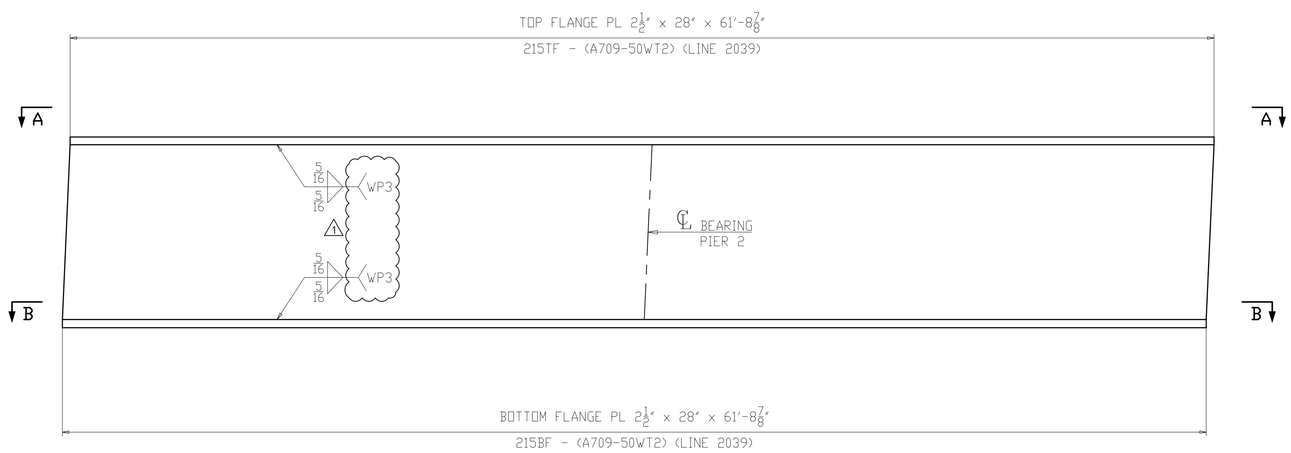

FLANGE DIAGRAM FOR 215C4

NOTES:
1. FOR GENERAL NOTES & WELD DETAILS "WB" & "FA" SEE SHEET GN201.
2. ALL MATERIAL A709-50WT2 (UN)
3. T2 - DENOTES MATERIAL SUBJECT TO CHARPY V-NOTCH TEST
- CVN = 15 FT-LBS @ 40°F "H" FREQ FOR THICKNESS UP 2".
- CVN = 20 FT-LBS @ 40°F "H" FREQ FOR THICKNESS OVER 2".

NO.	DATE	REMARKS	BY
1	10/10/19	WELD PROCEDURE # ADDED	DP

REVISIONS

Veritas STEEL
2-EAU CLAIRE, WI 3-WAUSAU, WI 4-PALATKA, FL
IAS NCA 1605

STRUCTURE	CUY-010-1976L, OH-10 WESTBOUND OVER GCRTA BLUE AND GREEN LINES
LOCATION	CLEVELAND, OHIO CUYAHOGA COUNTY
PROJECT NO.	17-3000
ENGINEER	MICHAEL BAKER INTERNATIONAL
CONTRACTOR	KOKOSING
ITEM	CAMBER & FLANGES DIAGRAM
SURFACE PREP.	SEE P201
OPEN HOLES	1 1/16"Ø (U.N.O.)
PAINT	SEE P201

APPROVAL	DRAWN AM 06/07/19	SHEET NO.	PLANT	ORDER NO.
SHOP	CHECKED SA 06/21/19	BG215AB	3	317023A-20

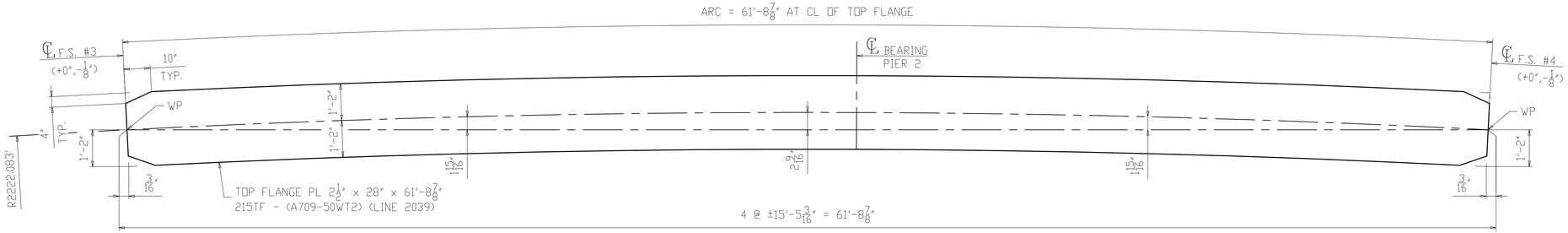

SECTION A-A
(TOP FLANGE)

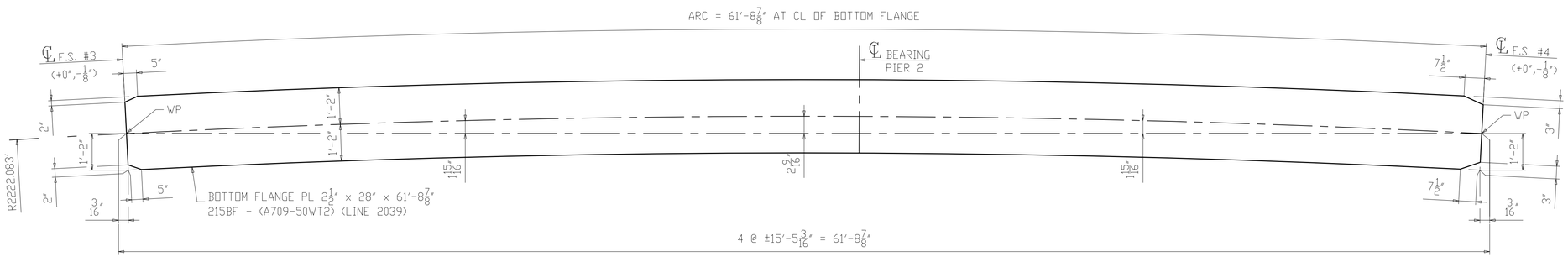

SECTION B-B
(BOTTOM FLANGE)

NOTES:
1. FOR GENERAL NOTES & WELD DETAILS "WB" & "FA" SEE SHEET GN201.
2. ALL MATERIAL A709-50WT2 (UN)
3. T2 - DENOTES MATERIAL SUBJECT TO CHARPY V-NOTCH TEST
- CVN = 15 FT-LBS @ 40°F "H" FREQ FOR THICKNESS UP 2".
- CVN = 20 FT-LBS @ 40°F "H" FREQ FOR THICKNESS OVER 2".

NO.	DATE	REMARKS	BY

REVISIONS

Veritas STEEL
2-EAU CLAIRE, WI 3-WAUSAU, WI 4-PALATKA, FL
TENCA 1605

STRUCTURE	CUY-010-1976L, OH-10 WESTBOUND OVER GCRTA BLUE AND GREEN LINES
LOCATION	CLEVELAND, OHIO CUYAHOGA COUNTY
PROJECT NO.	17-3000
ENGINEER	MICHAEL BAKER INTERNATIONAL
CONTRACTOR	KOKOSING
ITEM	FLANGE DIAGRAM
SURFACE PREP.	SEE P201 OPEN HOLES 1 1/16"Ø (U.N.O.)
PAINT	SEE P201

APPROVAL	DRAWN AM 06/07/19	SHEET NO.	PLANT	ORDER NO.
SHOP	CHECKED SA 06/21/19	BG215B	3	317023A-20

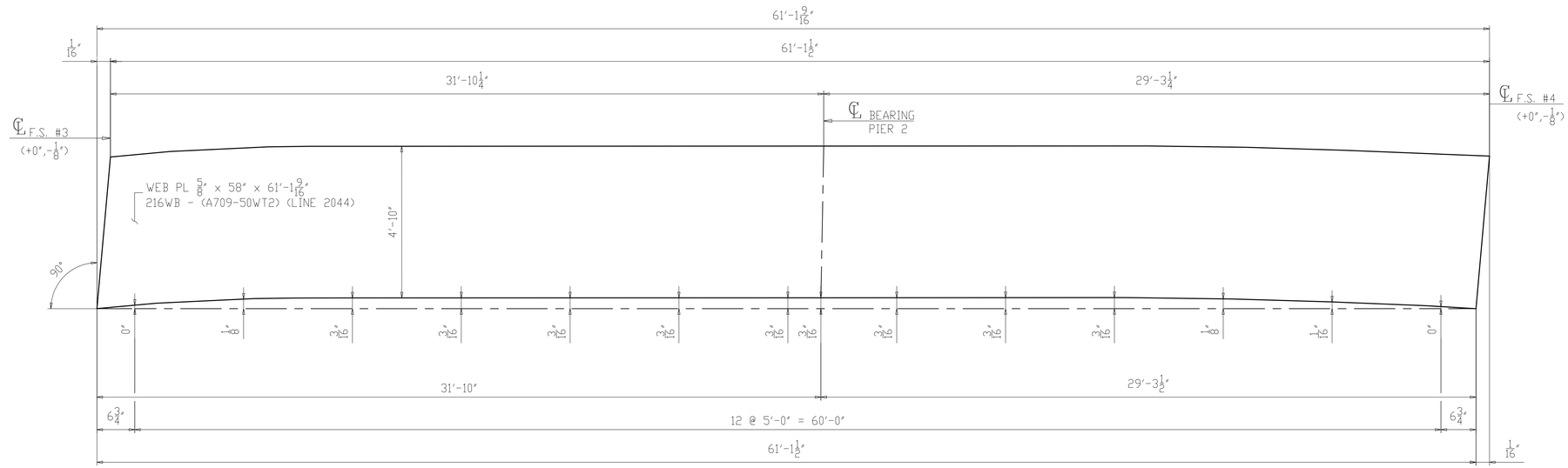

CAMBER DIAGRAM FOR 216D4
(DEVELOPED)

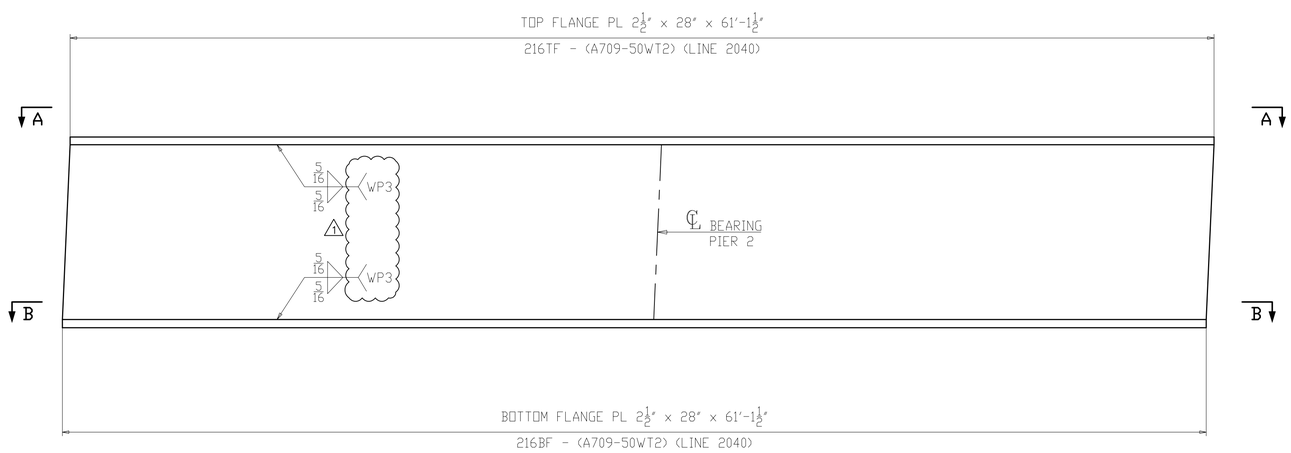

FLANGE DIAGRAM FOR 216D4

NOTES:
1. FOR GENERAL NOTES & WELD DETAILS "WB" & "FA" SEE SHEET GN201.
2. ALL MATERIAL A709-50WT2 (UN)
3. T2 - DENOTES MATERIAL SUBJECT TO CHARPY V-NOTCH TEST
- CVN = 15 FT-LBS @ 40°F "H" FREQ FOR THICKNESS UP 2".
- CVN = 20 FT-LBS @ 40°F "H" FREQ FOR THICKNESS OVER 2".

NO.	DATE	REMARKS	BY
1	10/10/19	WELD PROCEDURE # ADDED	DP

REVISIONS

Veritas STEEL
2-EAU CLAIRE, WI 3-WAUSAU, WI 4-PALATKA, FL
IAS NCA 1605

STRUCTURE	CUY-010-1976L, OH-10 WESTBOUND OVER GCRTA BLUE AND GREEN LINES
LOCATION	CLEVELAND, OHIO CUYAHOGA COUNTY
PROJECT NO.	17-3000
ENGINEER	MICHAEL BAKER INTERNATIONAL
CONTRACTOR	KOKOSING
ITEM	CAMBER & FLANGES DIAGRAM
SURFACE PREP.	SEE P201
OPEN HOLES	1 1/16"Ø (U.N.O.)
PAINT	SEE P201

APPROVAL	DRAWN AM 06/07/19	SHEET NO.	PLANT	ORDER NO.
SHOP	CHECKED SA 06/21/19	BG216AB	3	317023A-20

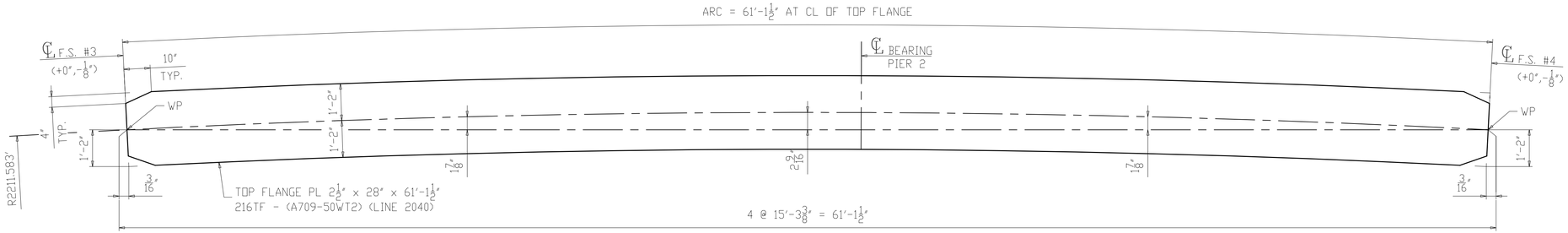

SECTION A-A
(TOP FLANGE)

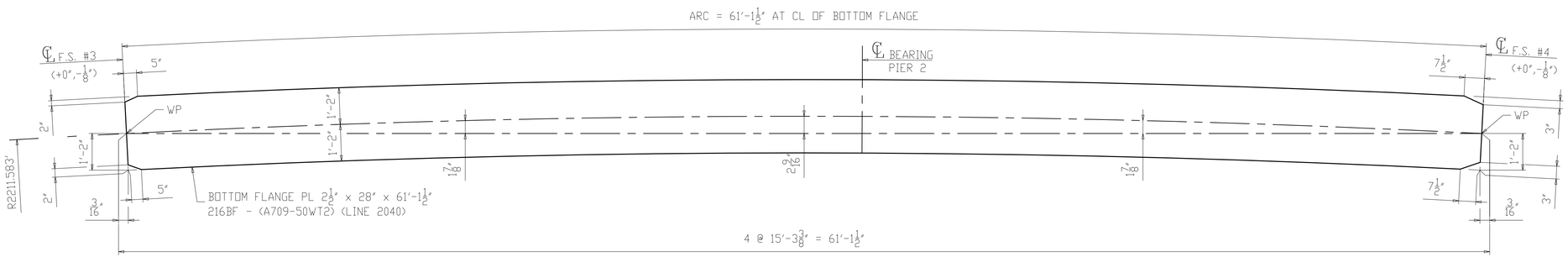

SECTION B-B
(BOTTOM FLANGE)

NOTES:
1. FOR GENERAL NOTES & WELD DETAILS "WB" & "FA" SEE SHEET GN201.
2. ALL MATERIAL A709-50WT2 (UN)
3. T2 - DENOTES MATERIAL SUBJECT TO CHARPY V-NOTCH TEST
- CVN = 15 FT-LBS @ 40°F "H" FREQ FOR THICKNESS UP 2".
- CVN = 20 FT-LBS @ 40°F "H" FREQ FOR THICKNESS OVER 2".

NO.	DATE	REMARKS	BY

REVISIONS

Veritas STEEL
2-EAU CLAIRE, WI 3-WAUSAU, WI 4-PALATKA, FL
IAS 1605

STRUCTURE	CUY-010-1976L, OH-10 WESTBOUND OVER GCRTA BLUE AND GREEN LINES
LOCATION	CLEVELAND, OHIO CUYAHOGA COUNTY
PROJECT NO.	17-3000
ENGINEER	MICHAEL BAKER INTERNATIONAL
CONTRACTOR	KOKOSING
ITEM	FLANGE DIAGRAM
SURFACE PREP.	SEE P201 OPEN HOLES 1 1/16"Ø (U.N.O.)
PAINT	SEE P201

APPROVAL	DRAWN AM 06/07/19	SHEET NO.	PLANT	ORDER NO.
SHOP	CHECKED SA 06/21/19	BG216B	3	317023A-20

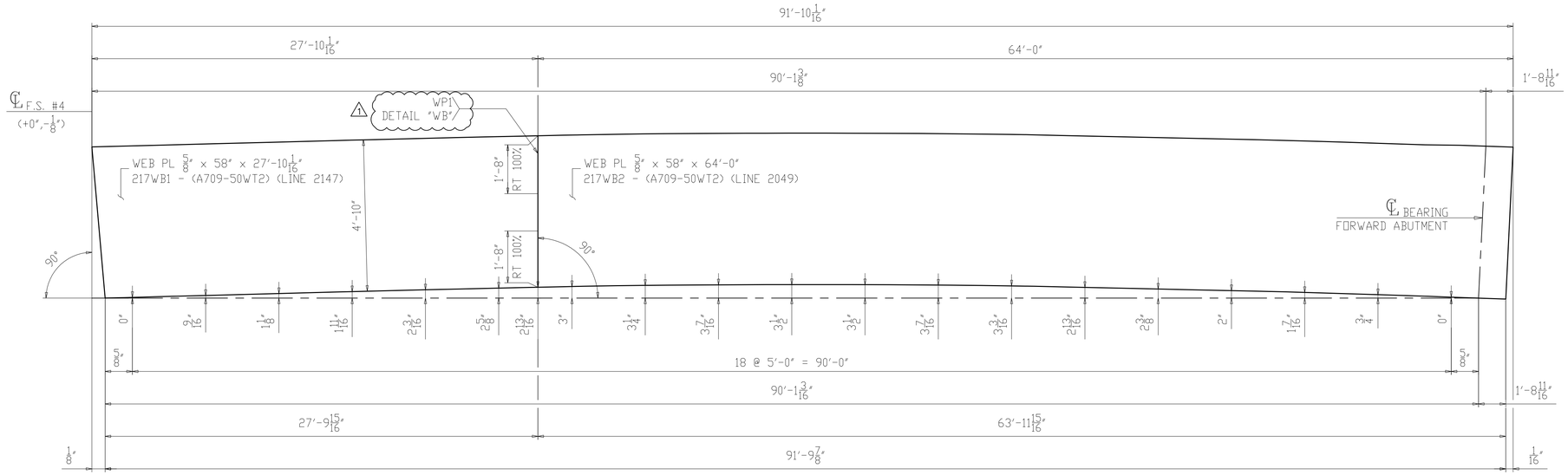

CAMBER DIAGRAM FOR 217A5
(DEVELOPED)

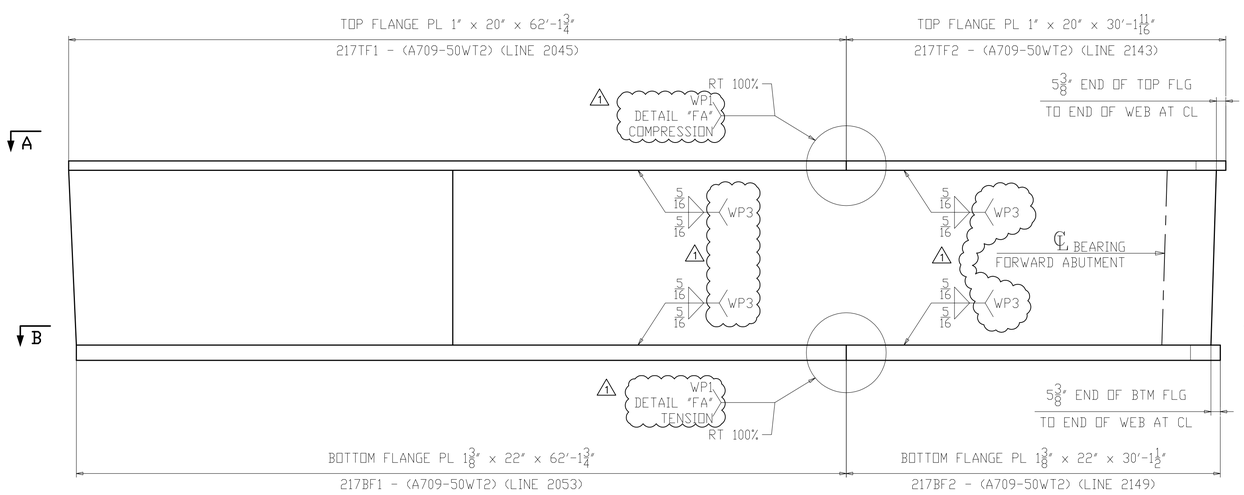

FLANGE DIAGRAM FOR 217A5

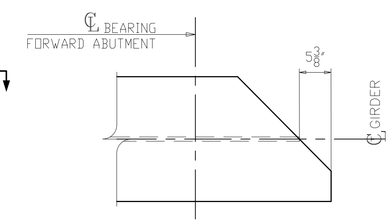

SECTION C
(SHOWN AT TOP)
(SIMILAR AT BOTTOM)

NOTES:
1. FOR GENERAL NOTES & WELD DETAILS "WB" & "FA" SEE SHEET GN201.
2. ALL MATERIAL A709-50WT2 (UN)
3. T2 - DENOTES MATERIAL SUBJECT TO CHARPY V-NOTCH TEST
- CVN = 15 FT-LBS @ 40°F "H" FREQ FOR THICKNESS UP 2".
- CVN = 20 FT-LBS @ 40°F "H" FREQ FOR THICKNESS OVER 2".

NO.	DATE	REMARKS	BY
1	10/10/19	WELD PROCEDURE # ADDED	DP

REVISIONS

Veritas STEEL
2-EAU CLAIRE, WI 3-WAUSAU, WI 4-PALATKA, FL
TENCA 1605

STRUCTURE	CUY-010-1976L, OH-10 WESTBOUND OVER GCRTA BLUE AND GREEN LINES
LOCATION	CLEVELAND, OHIO CUYAHOGA COUNTY
PROJECT NO.	17-3000
ENGINEER	MICHAEL BAKER INTERNATIONAL
CONTRACTOR	KOKOSING
ITEM	CAMBER & FLANGES DIAGRAM
SURFACE PREP.	SEE P201 OPEN HOLES 1 1/16"Ø (U.N.O.)
PAINT	SEE P201

APPROVAL	DRAWN AM 06/07/19	SHEET NO.	PLANT	ORDER NO.
SHOP	CHECKED SA 06/21/19	BG217AB	3	317023A-20

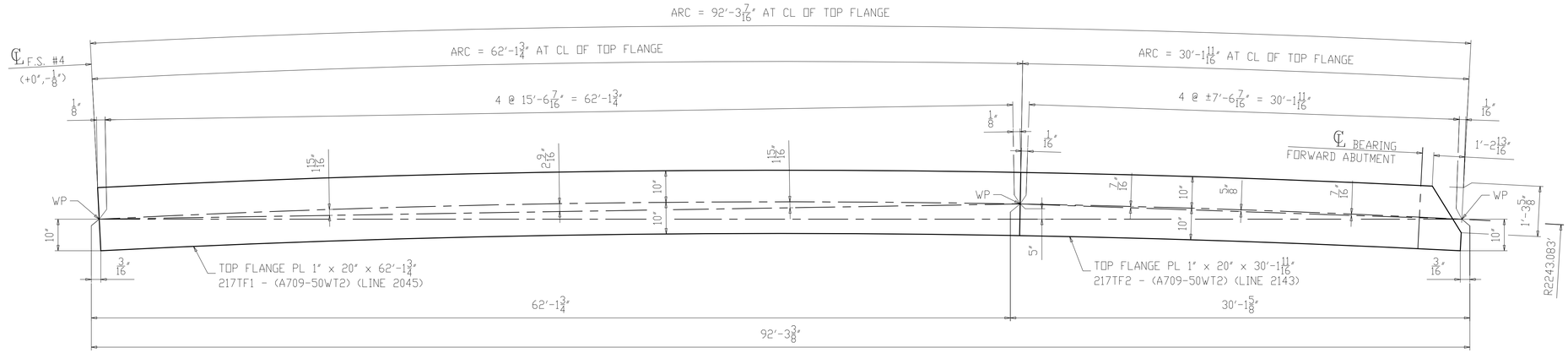

SECTION A-A
(TOP FLANGE)

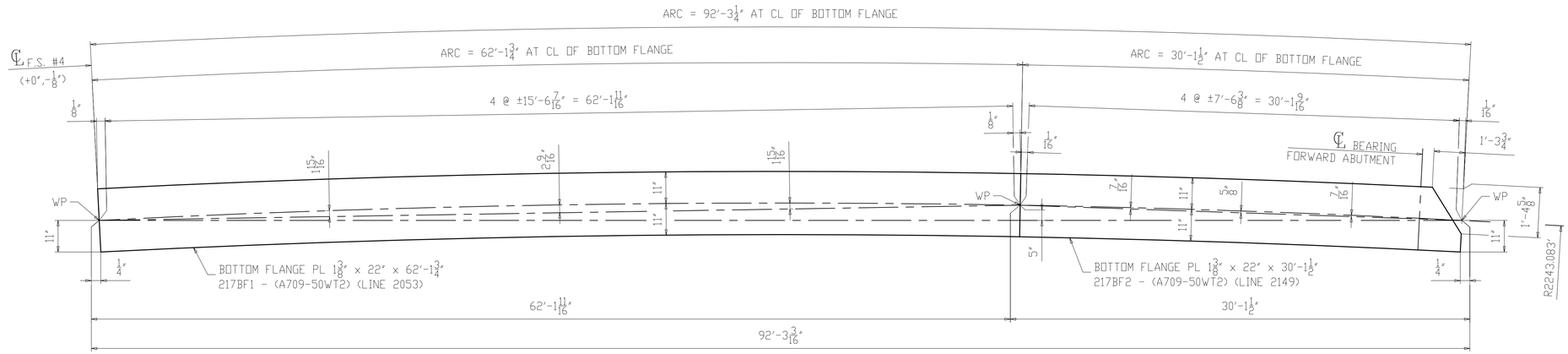

SECTION B-B
(BOTTOM FLANGE)

NOTES:
1. FOR GENERAL NOTES & WELD DETAILS "WB" & "FA" SEE SHEET GN201.
2. ALL MATERIAL A709-50WT2 (UN)
3. T2 - DENOTES MATERIAL SUBJECT TO CHARPY V-NOTCH TEST
- CVN = 15 FT-LBS @ 40°F "H" FREQ FOR THICKNESS UP 2".
- CVN = 20 FT-LBS @ 40°F "H" FREQ FOR THICKNESS OVER 2".

NO.	DATE	REMARKS	BY
△			

REVISIONS

Veritas STEEL
2-EAU CLAIRE, WI 3-WAUSAU, WI 4-PALATKA, FL
IENCA 1605

STRUCTURE	CUY-010-1976L, OH-10 WESTBOUND OVER GCRTA BLUE AND GREEN LINES
LOCATION	CLEVELAND, OHIO CUYAHOGA COUNTY
PROJECT NO.	17-3000
ENGINEER	MICHAEL BAKER INTERNATIONAL
CONTRACTOR	KOKOSING
ITEM	FLANGE DIAGRAM
SURFACE PREP.	SEE P201 OPEN HOLES 1 1/16"Ø (U.N.O.)
PAINT	SEE P201

APPROVAL	DRAWN AM 06/07/19	SHEET NO.	PLANT	ORDER NO.
SHOP	CHECKED SA 06/21/19	BG217B	3	317023A-20

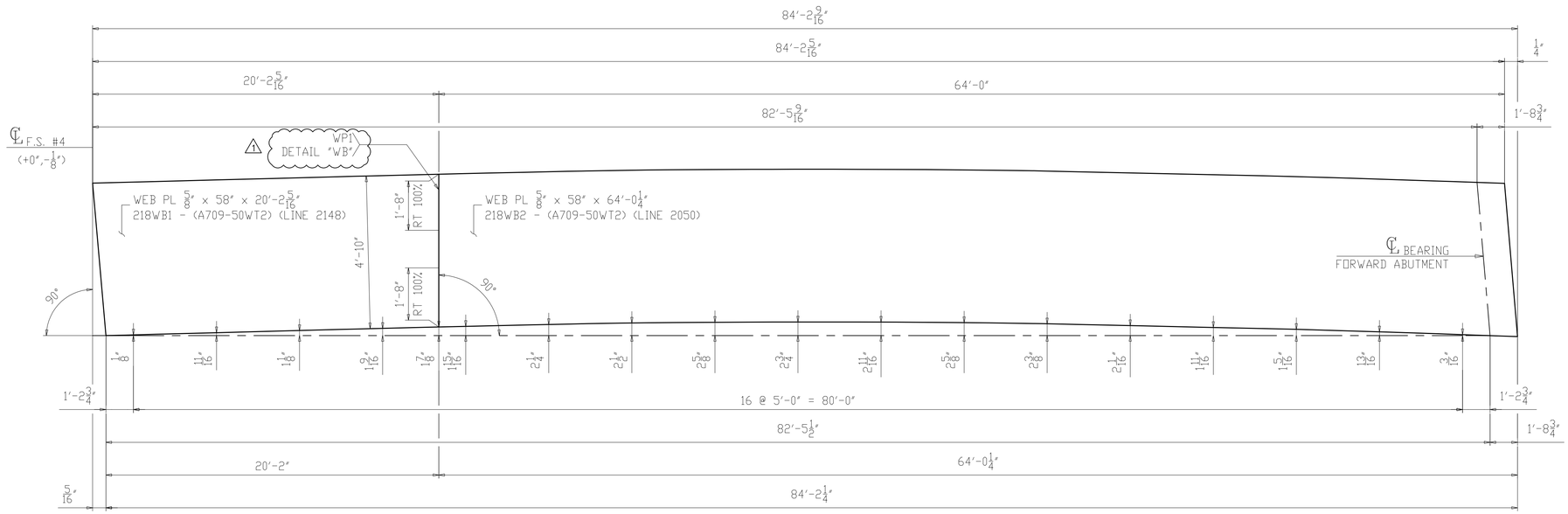

CAMBER DIAGRAM FOR 218B5
(DEVELOPED)

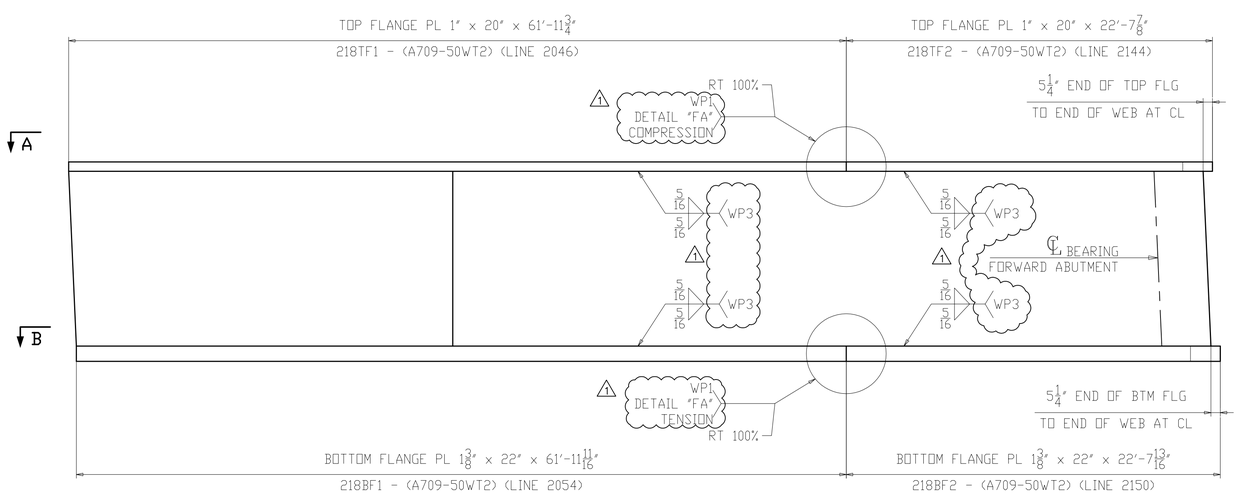

FLANGE DIAGRAM FOR 218B5

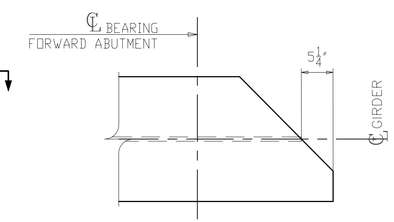

SECTION C
(SHOWN AT TOP)
(SIMILAR AT BOTTOM)

NOTES:
1. FOR GENERAL NOTES & WELD DETAILS "WB" & "FA" SEE SHEET GN201.
2. ALL MATERIAL A709-50WT2 (UN)
3. T2 - DENOTES MATERIAL SUBJECT TO CHARPY V-NOTCH TEST
- CVN = 15 FT-LBS @ 40°F "H" FREQ FOR THICKNESS UP 2".
- CVN = 20 FT-LBS @ 40°F "H" FREQ FOR THICKNESS OVER 2".

NO.	DATE	REMARKS	BY
1	10/10/19	WELD PROCEDURE # ADDED	DP

REVISIONS

Veritas STEEL
2-EAU CLAIRE, WI 3-WAUSAU, WI 4-PALATKA, FL
TENCA 1605

STRUCTURE	CUY-010-1976L, OH-10 WESTBOUND OVER GCRTA BLUE AND GREEN LINES
LOCATION	CLEVELAND, OHIO CUYAHOGA COUNTY
PROJECT NO.	17-3000
ENGINEER	MICHAEL BAKER INTERNATIONAL
CONTRACTOR	KOKOSING
ITEM	CAMBER & FLANGES DIAGRAM
SURFACE PREP.	SEE P201 OPEN HOLES 1 1/16"Ø (U.N.O.)
PAINT	SEE P201

APPROVAL	DRAWN AM 06/07/19	SHEET NO.	PLANT	ORDER NO.
SHOP	CHECKED SA 06/21/19	BG218AB	3	317023A-20

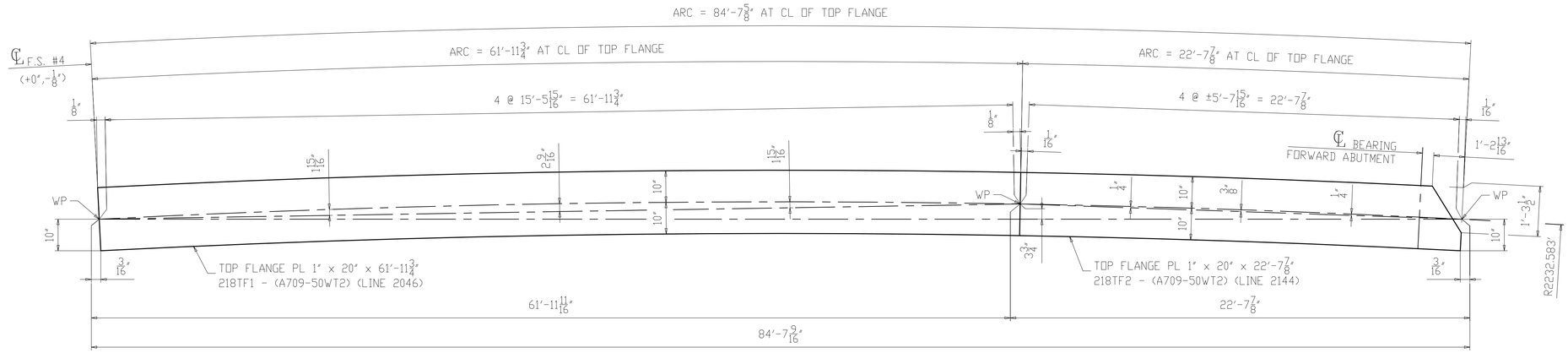

SECTION A-A
(TOP FLANGE)

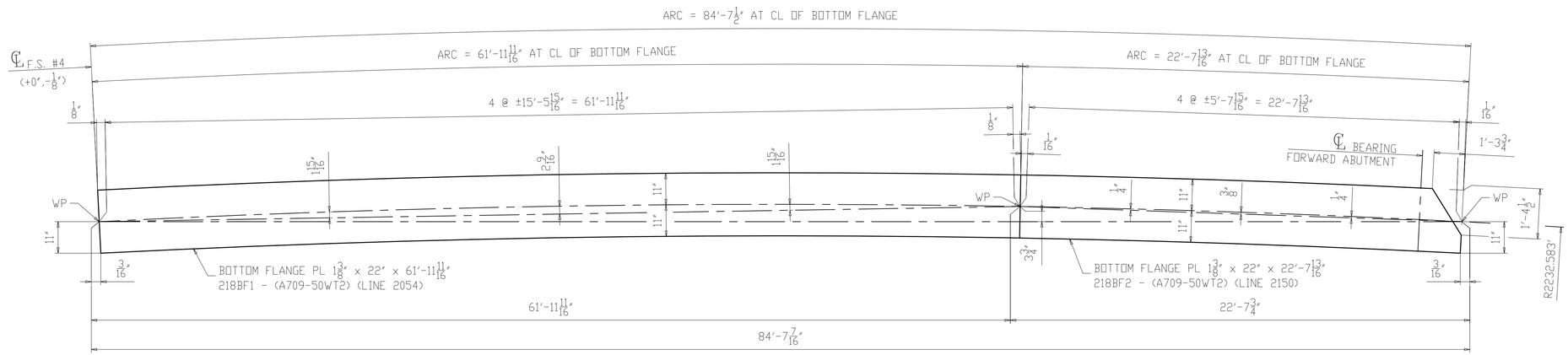

SECTION B-B
(BOTTOM FLANGE)

NOTES:
1. FOR GENERAL NOTES & WELD DETAILS "WB" & "FA" SEE SHEET GN201.
2. ALL MATERIAL A709-50WT2 (UN)
3. T2 - DENOTES MATERIAL SUBJECT TO CHARPY V-NOTCH TEST
- CVN = 15 FT-LBS @ 40°F "H" FREQ FOR THICKNESS UP 2".
- CVN = 20 FT-LBS @ 40°F "H" FREQ FOR THICKNESS OVER 2".

NO.	DATE	REMARKS	BY
△			

REVISIONS

Veritas STEEL
2-EAU CLAIRE, WI 3-WAUSAU, WI 4-PALATKA, FL
TENCA 1605

STRUCTURE	CUY-010-1976L, OH-10 WESTBOUND OVER GCRTA BLUE AND GREEN LINES
LOCATION	CLEVELAND, OHIO CUYAHOGA COUNTY
PROJECT NO.	17-3000
ENGINEER	MICHAEL BAKER INTERNATIONAL
CONTRACTOR	KOKOSING
ITEM	FLANGE DIAGRAM
SURFACE PREP.	SEE P201 OPEN HOLES 1 1/16"Ø (U.N.O.)
PAINT	SEE P201

APPROVAL	DRAWN AM 06/07/19	SHEET NO.	PLANT	ORDER NO.
SHOP	CHECKED SA 06/21/19	BG218B	3	317023A-20

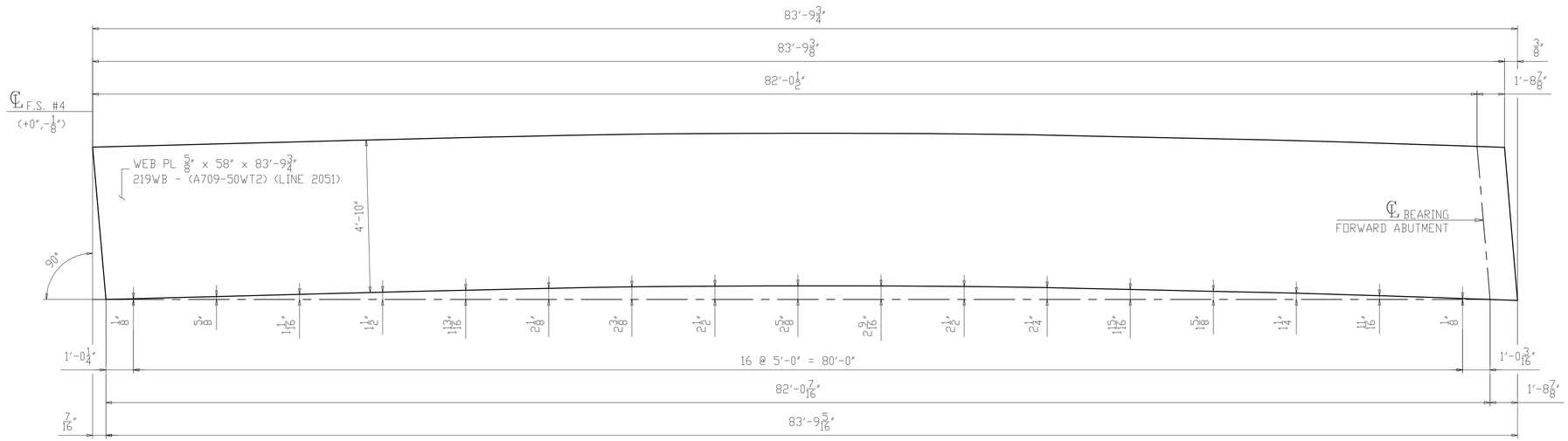

CAMBER DIAGRAM FOR 219C5
(DEVELOPED)

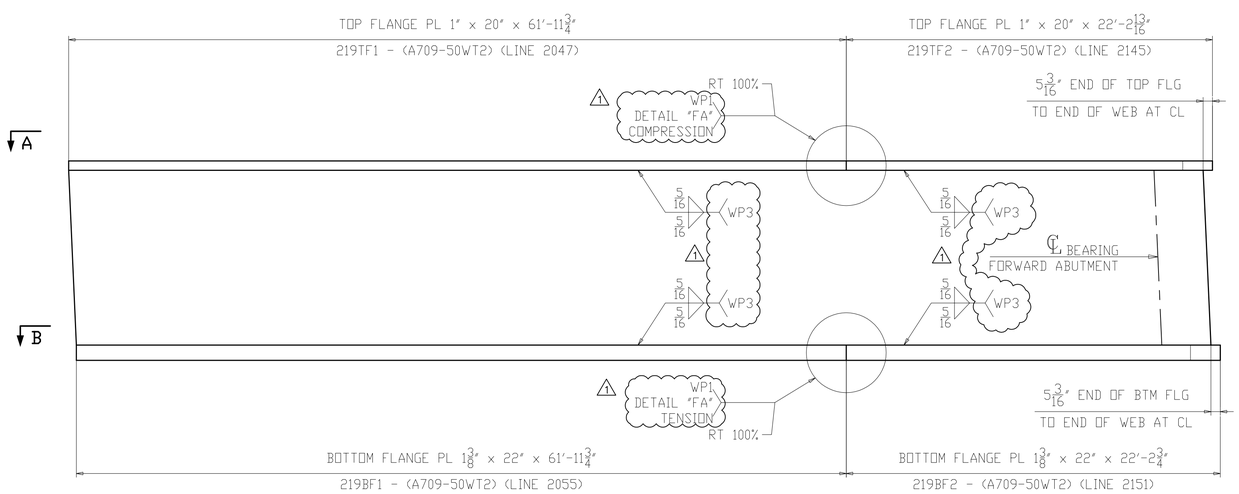

FLANGE DIAGRAM FOR 219C5

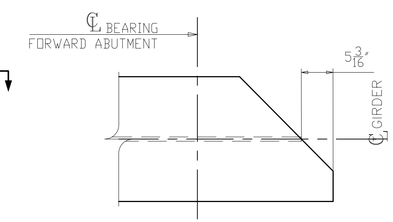

SECTION C
(SHOWN AT TOP)
(SIMILAR AT BOTTOM)

NOTES:
1. FOR GENERAL NOTES & WELD DETAILS "WB" & "FA" SEE SHEET GN201.
2. ALL MATERIAL A709-50WT2 (UN)
3. T2 - DENOTES MATERIAL SUBJECT TO CHARPY V-NOTCH TEST
- CVN = 15 FT-LBS @ 40°F "H" FREQ FOR THICKNESS UP 2".
- CVN = 20 FT-LBS @ 40°F "H" FREQ FOR THICKNESS OVER 2".

NO.	DATE	REMARKS	BY
1	10/10/19	WELD PROCEDURE # ADDED	DP

REVISIONS

Veritas STEEL
2-EAU CLAIRE, WI 3-WAUSAU, WI 4-PALATKA, FL
IAENCA 1605

STRUCTURE	CUY-010-1976L, OH-10 WESTBOUND OVER GCRTA BLUE AND GREEN LINES
LOCATION	CLEVELAND, OHIO CUYAHOGA COUNTY
PROJECT NO.	17-3000
ENGINEER	MICHAEL BAKER INTERNATIONAL
CONTRACTOR	KOKOSING
ITEM	CAMBER & FLANGES DIAGRAM
SURFACE PREP.	SEE P201 OPEN HOLES 1 1/16"Ø (U.N.O.)
PAINT	SEE P201

APPROVAL	DRAWN AM 06/07/19	SHEET NO.	PLANT	ORDER NO.
SHOP	CHECKED SA 06/21/19	BG219AB	3	317023A-20

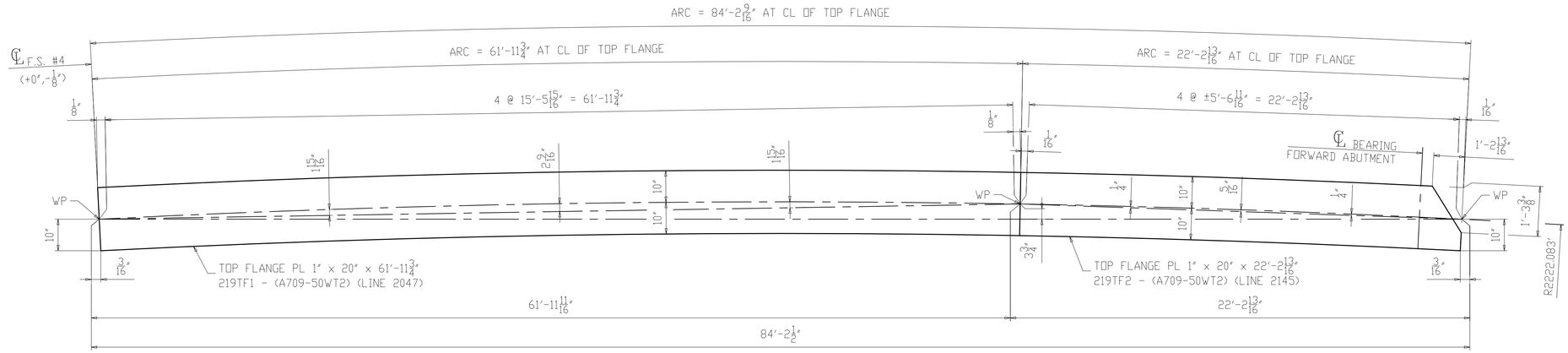

SECTION A-A
(TOP FLANGE)

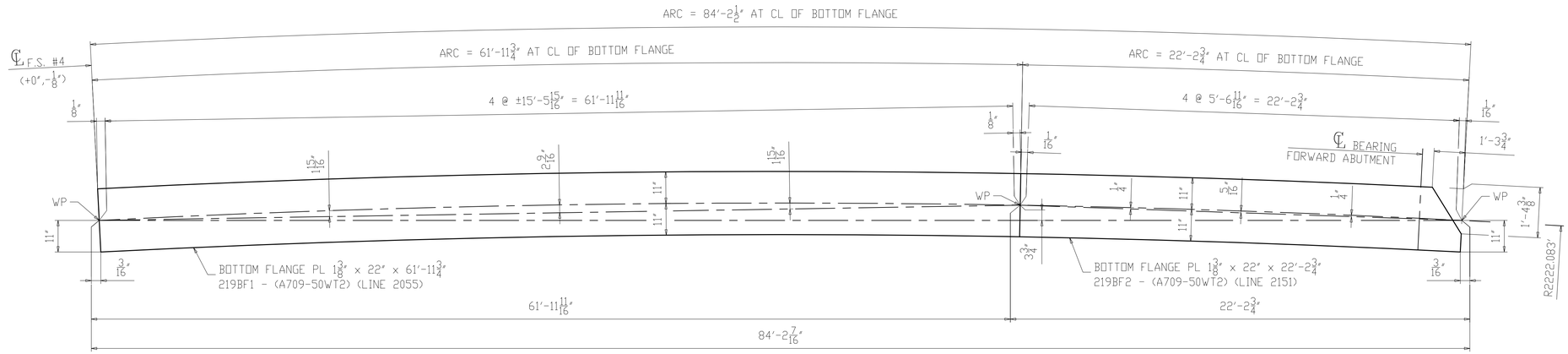

SECTION B-B
(BOTTOM FLANGE)

NOTES:
1. FOR GENERAL NOTES & WELD DETAILS "WB" & "FA" SEE SHEET GN201.
2. ALL MATERIAL A709-50WT2 (UN)
3. T2 - DENOTES MATERIAL SUBJECT TO CHARPY V-NOTCH TEST
- CVN = 15 FT-LBS @ 40°F "H" FREQ FOR THICKNESS UP 2".
- CVN = 20 FT-LBS @ 40°F "H" FREQ FOR THICKNESS OVER 2".

NO.	DATE	REMARKS	BY
△			

REVISIONS

Veritas STEEL
2-EAU CLAIRE, WI 3-WAUSAU, WI 4-PALATKA, FL
IAS 1605

STRUCTURE	CUY-010-1976L, OH-10 WESTBOUND OVER GCRTA BLUE AND GREEN LINES
LOCATION	CLEVELAND, OHIO CUYAHOGA COUNTY
PROJECT NO.	17-3000
ENGINEER	MICHAEL BAKER INTERNATIONAL
CONTRACTOR	KOKOSING
ITEM	FLANGE DIAGRAM
SURFACE PREP.	SEE P201 OPEN HOLES 1 1/16"Ø (U.N.O.)
PAINT	SEE P201

APPROVAL	DRAWN AM 06/07/19	SHEET NO.	PLANT	ORDER NO.
SHOP	CHECKED SA 06/21/19	BG219B	3	317023A-20

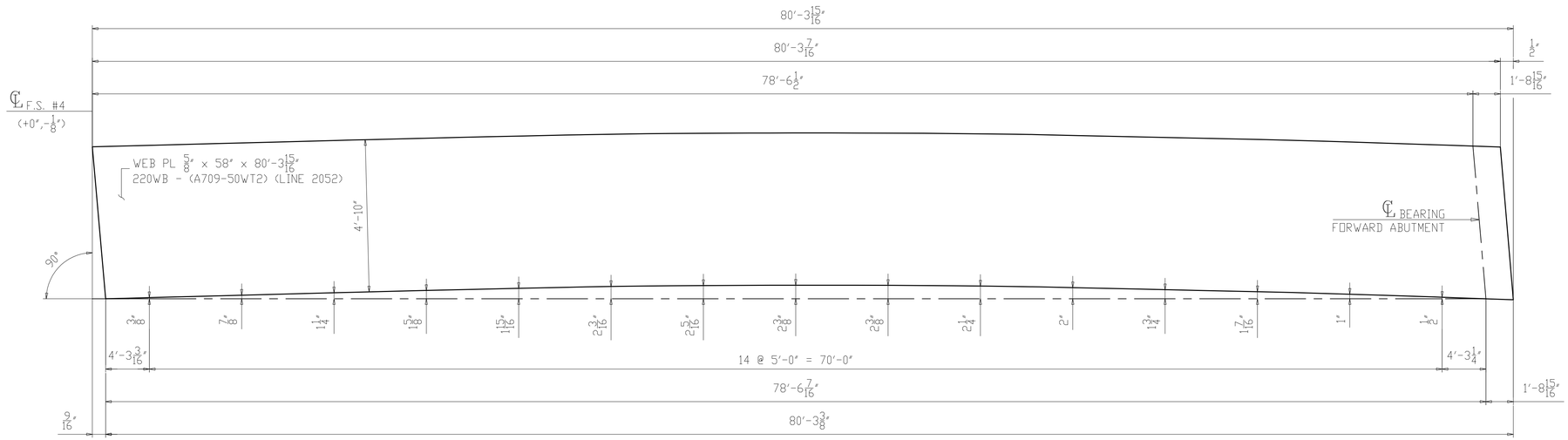

CAMBER DIAGRAM FOR 220D5
(DEVELOPED)

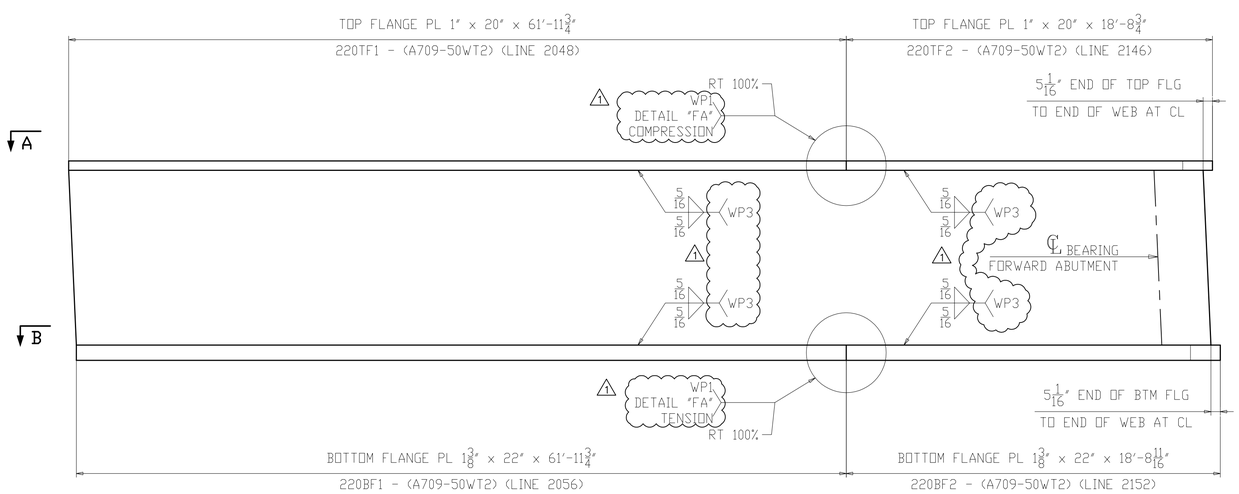

FLANGE DIAGRAM FOR 220D5

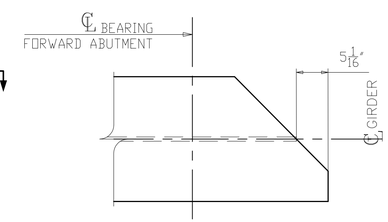

SECTION C
(SHOWN AT TOP)
(SIMILAR AT BOTTOM)

NOTES:
1. FOR GENERAL NOTES & WELD DETAILS "WB" & "FA" SEE SHEET GN201.
2. ALL MATERIAL A709-50WT2 (UN)
3. T2 - DENOTES MATERIAL SUBJECT TO CHARPY V-NOTCH TEST
- CVN = 15 FT-LBS @ 40°F "H" FREQ FOR THICKNESS UP 2".
- CVN = 20 FT-LBS @ 40°F "H" FREQ FOR THICKNESS OVER 2".

NO.	DATE	REMARKS	BY
1	10/10/19	WELD PROCEDURE # ADDED	DP

REVISIONS

Veritas STEEL
2-EAU CLAIRE, WI 3-WAUSAU, WI 4-PALATKA, FL
TENCA 1605

STRUCTURE	CUY-010-1976L, OH-10 WESTBOUND OVER GCRTA BLUE AND GREEN LINES
LOCATION	CLEVELAND, OHIO CUYAHOGA COUNTY
PROJECT NO.	17-3000
ENGINEER	MICHAEL BAKER INTERNATIONAL
CONTRACTOR	KOKOSING
ITEM	CAMBER & FLANGES DIAGRAM
SURFACE PREP.	SEE P201 OPEN HOLES 1 1/16"Ø (U.N.O.)
PAINT	SEE P201

APPROVAL	DRAWN AM 06/07/19	SHEET NO.	PLANT	ORDER NO.
SHOP	CHECKED SA 06/21/19	BG220AB	3	317023A-20

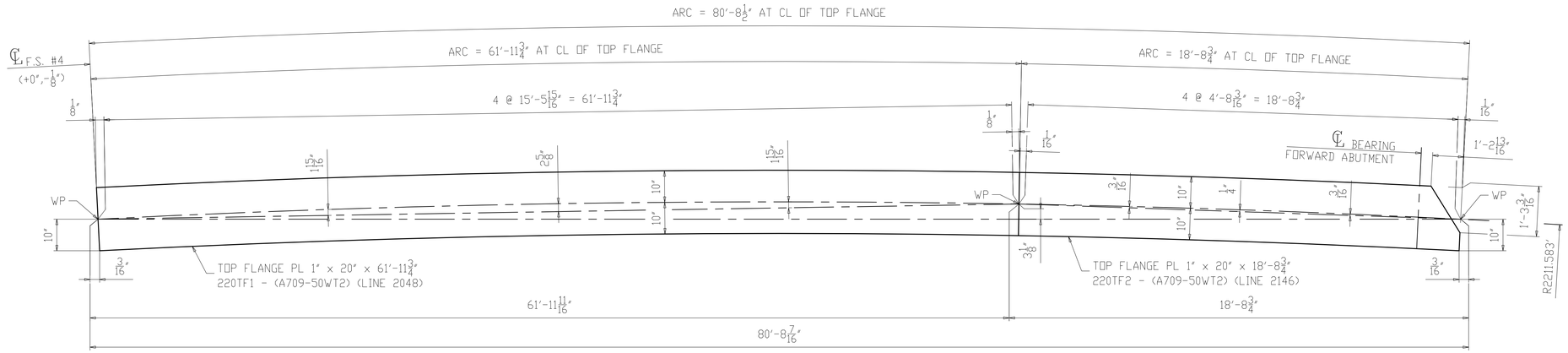

SECTION A-A
(TOP FLANGE)

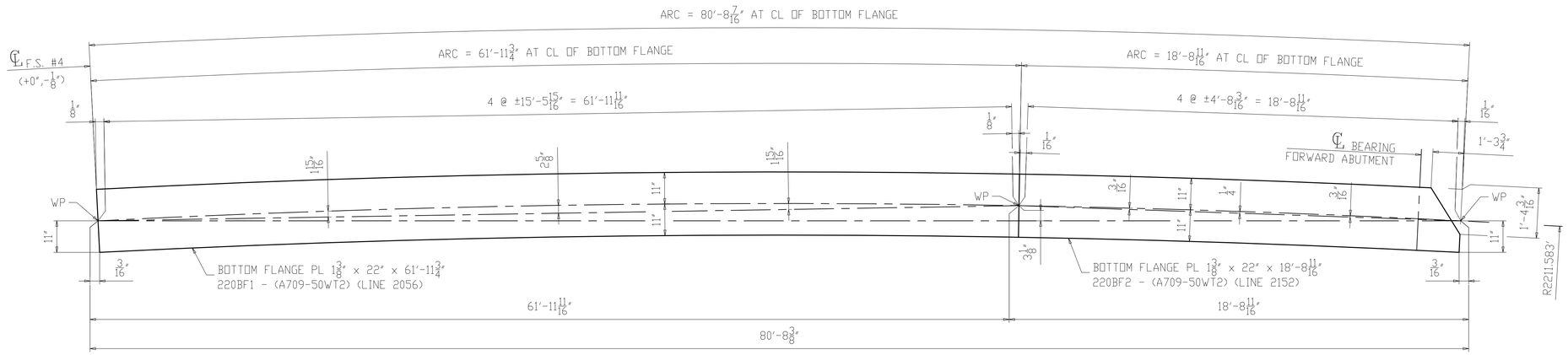

SECTION B-B
(BOTTOM FLANGE)

NOTES:
1. FOR GENERAL NOTES & WELD DETAILS "WB" & "FA" SEE SHEET GN201.
2. ALL MATERIAL A709-50WT2 (UN)
3. T2 - DENOTES MATERIAL SUBJECT TO CHARPY V-NOTCH TEST
- CVN = 15 FT-LBS @ 40°F "H" FREQ FOR THICKNESS UP 2".
- CVN = 20 FT-LBS @ 40°F "H" FREQ FOR THICKNESS OVER 2".

NO.	DATE	REMARKS	BY
△			

REVISIONS

Veritas STEEL
2-EAU CLAIRE, WI 3-WAUSAU, WI 4-PALATKA, FL
TENCA 1605

STRUCTURE	CUY-010-1976L, OH-10 WESTBOUND OVER GCRTA BLUE AND GREEN LINES
LOCATION	CLEVELAND, OHIO CUYAHOGA COUNTY
PROJECT NO.	17-3000
ENGINEER	MICHAEL BAKER INTERNATIONAL
CONTRACTOR	KOKOSING
ITEM	FLANGE DIAGRAM
SURFACE PREP.	SEE P201 OPEN HOLES 1 1/16"Ø (U.N.O.)
PAINT	SEE P201

APPROVAL	DRAWN AM 06/07/19	SHEET NO.	PLANT	ORDER NO.
SHOP	CHECKED SA 06/21/19	BG220B	3	317023A-20

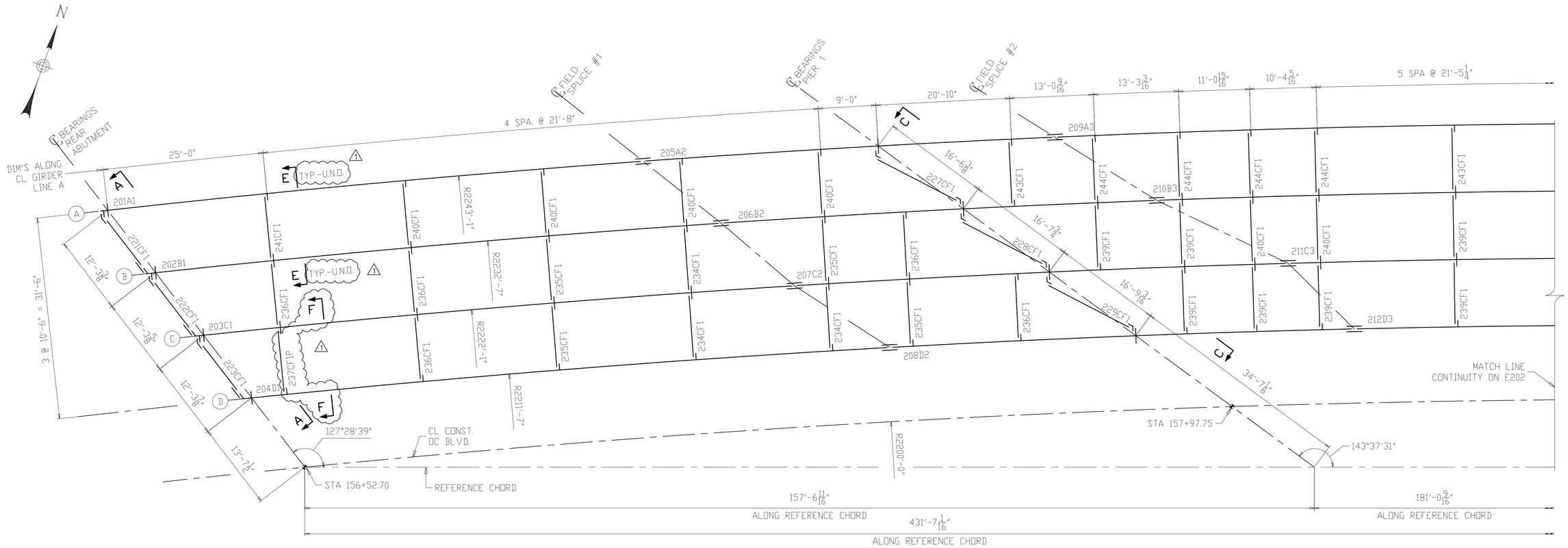

ERECTION PLAN

NOTES:
1. FOR GENERAL NOTES SEE SHEET GN201.
2. ALL MATERIAL A709-50WT2 (UN).

ALL STEEL SHALL BE ERECTED WITH THE "SHIPPING MARK" IN THE SAME RELATIVE POSITION AS SHOWN ON THE ERECTION PLAN

NOTICE TO ERECTOR
BACKCHARGES FOR CORRECTIVE WORK OR REPLACED MATERIAL WILL NOT BE ACCEPTED UNLESS EXPRESSLY AUTHORIZED BY VERITAS STEEL, LLC BEFORE ANY SUCH COSTS ARE INCURRED.

SHEET INDEX

DWG	SHEET NUMBER
ERECTION DRAWINGS	E201 - E205
FIELD BOLT LIST	FB201
PAINT NOTES	P201
GENERAL NOTES	GN201
BASIC GIRDERS	BG201 - BG220
HORIZONTAL CURVING DIAGRAMS	HC201 - HC205
BLOCKING DIAGRAMS	BD201 - BD202
FULL ASSEMBLY DIAGRAM	FA201
PLATE GIRDER ASSEMBLIES	201 - 220
FIELD ASSEMBLIES	221 - 244
"X" SHEETS	X201 - X208

NO.	DATE	REMARKS	BY
1	10/10/19	AS PER APPROVAL COMMENTS	DP

REVISIONS

Veritas STEEL
2-EAU CLAIRE, WI 3-WAUSAU, WI 4-PALATKA, FL
IAS 1605

STRUCTURE: CUY-010-1976L, OH-10 WESTBOUND OVER GCRTA BLUE AND GREEN LINES
LOCATION: CLEVELAND, OHIO CUYAHOGA COUNTY
PROJECT NO.: 17-3000
ENGINEER: MICHAEL BAKER INTERNATIONAL
CONTRACTOR: KOKOSING
ITEM: ERECTION PLAN
SURFACE PREP.: SEE P201
OPEN HOLES: 1 1/16"Ø (U.N.O.)
PAINT: SEE P201

APPROVAL	DRAWN AM 06/03/19	SHEET NO.	PLANT	ORDER NO.
SHOP	CHECKED DP 07/10/19	E201	3	317023A

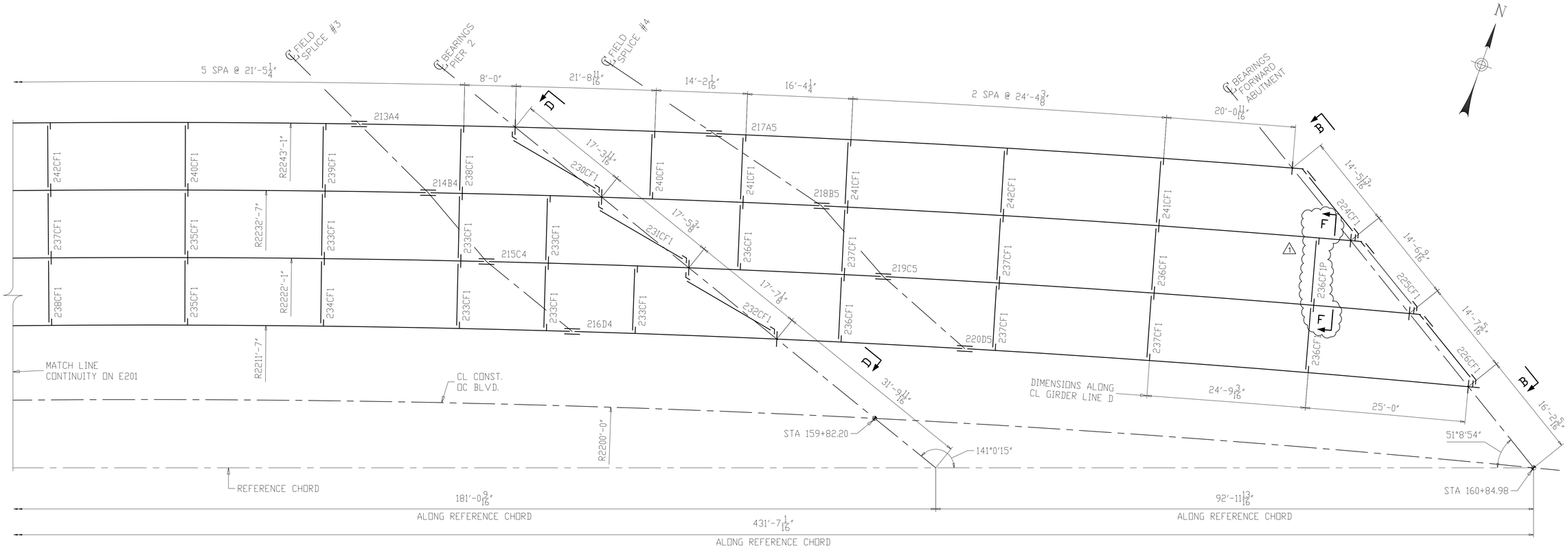

ERECTION PLAN

NOTES:
1. FOR GENERAL NOTES SEE SHEET GN201.
2. ALL MATERIAL A709-50WT2 (UN).

NO.	DATE	REMARKS	BY
1	10/10/19	AS PER APPROVAL COMMENTS	DP

REVISIONS

Veritas STEEL
2-EAU CLAIRE, WI 3-WAUSAU, WI 4-PALATKA, FL
IAS 1605

STRUCTURE: CUY-010-1976L, OH-10 WESTBOUND OVER GCRTA BLUE AND GREEN LINES
LOCATION: CLEVELAND, OHIO CUYAHOGA COUNTY
PROJECT NO.: 17-3000
ENGINEER: MICHAEL BAKER INTERNATIONAL
CONTRACTOR: KOKOSING

ITEM: ERECTION PLAN
SURFACE PREP.: SEE P201 OPEN HOLES: 1 1/16"Ø (U.N.O.)
PAINT: SEE P201

APPROVAL	DRAWN AM 06/03/19	SHEET NO.	PLANT	ORDER NO.
SHOP	CHECKED DP 07/10/19	E202	3	317023A

ALL STEEL SHALL BE ERECTED WITH THE "SHIPPING MARK" IN THE SAME RELATIVE POSITION AS SHOWN ON THE ERECTION PLAN

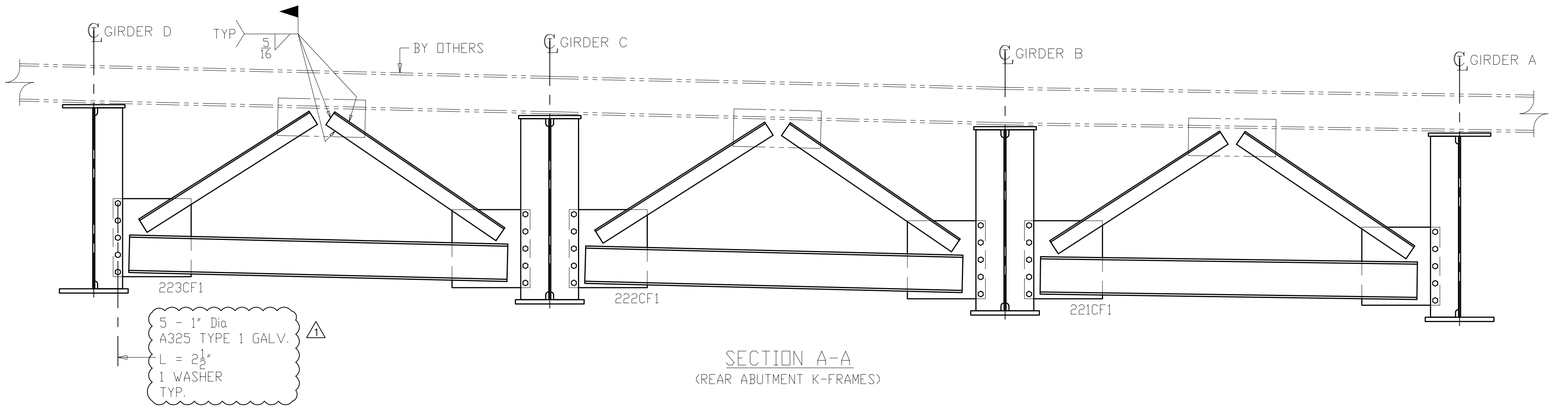

SECTION A-A
(REAR ABUTMENT K-FRAMES)

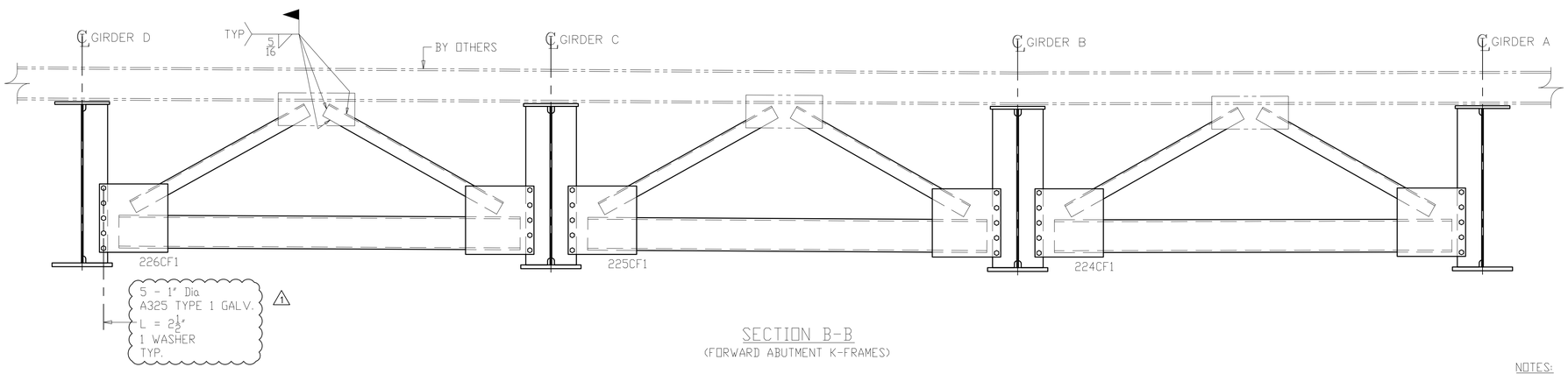

SECTION B-B
(FORWARD ABUTMENT K-FRAMES)

NOTES:
1. FOR GENERAL NOTES SEE SHEET GN201.
2. ALL MATERIAL A709-50WT2 (UN)

NO.	DATE	REMARKS	BY
1	10/10/19	AS PER APPROVAL COMMENTS	DP

REVISIONS

Veritas STEEL
2-EAU CLAIRE, WI 3-WAUSAU, WI 4-PALATKA, FL
TENCA 1605

STRUCTURE	CUY-010-1976L, OH-10 WESTBOUND OVER GCRTA BLUE AND GREEN LINES
LOCATION	CLEVELAND, OHIO CUYAHOGA COUNTY
PROJECT NO.	17-3000
ENGINEER	MICHAEL BAKER INTERNATIONAL
CONTRACTOR	KOKOSING
ITEM	ERECTION PLAN - SECTIONS
SURFACE PREP.	SEE P201 OPEN HOLES $1\frac{1}{16}$"Ø (U.N.O.)
PAINT	SEE P201

APPROVAL	DRAWN AM 06/04/19	SHEET NO.	PLANT	ORDER NO.
SHOP	CHECKED DP 07/10/19	E203	3	317023A

ALL STEEL SHALL BE ERECTED WITH THE "SHIPPING MARK" IN THE SAME RELATIVE POSITION AS SHOWN ON THE ERECTION PLAN

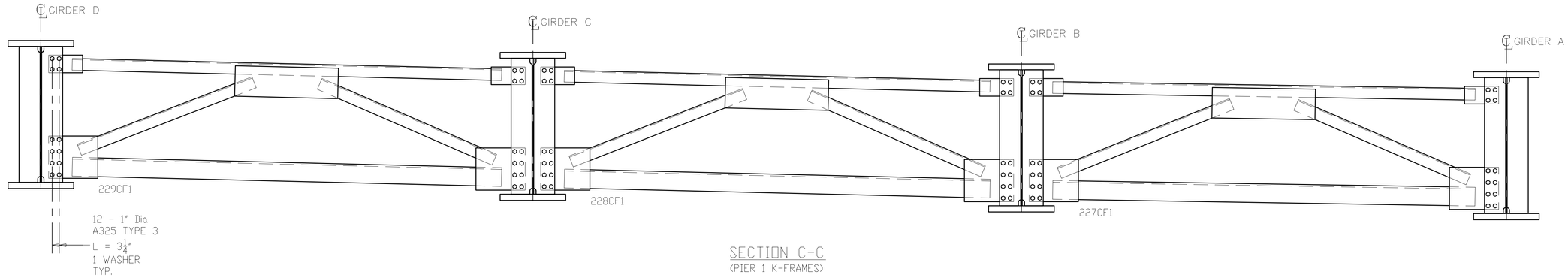

SECTION C-C
(PIER 1 K-FRAMES)

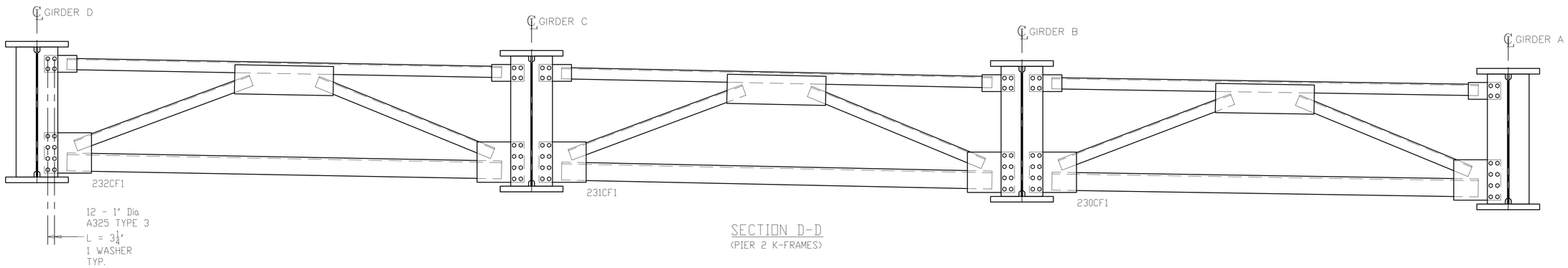

SECTION D-D
(PIER 2 K-FRAMES)

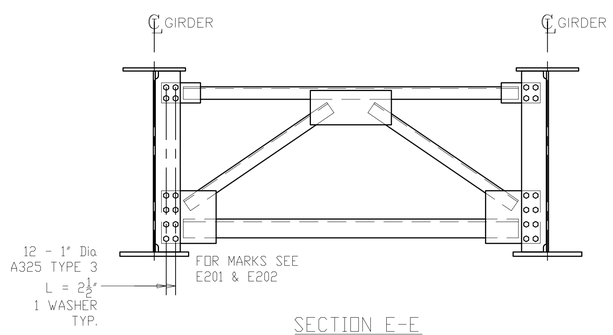

SECTION E-E
(INTERMEDIATE K-FRAMES)

1

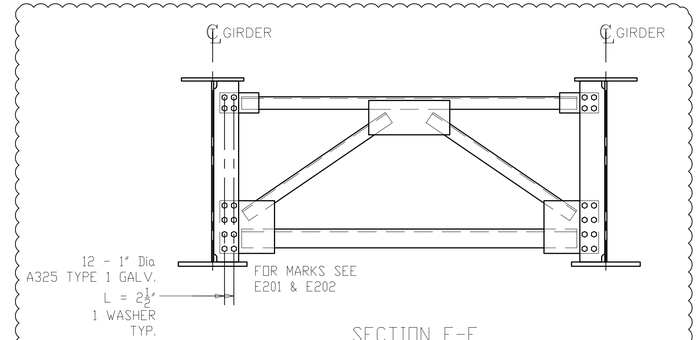

SECTION F-F
(INTERMEDIATE PAINTED K-FRAMES)

ALL STEEL SHALL BE ERECTED WITH THE "SHIPPING MARK" IN THE SAME RELATIVE POSITION AS SHOWN ON THE ERECTION PLAN

NOTES:
1. FOR GENERAL NOTES SEE SHEET GN201.
2. ALL MATERIAL A709-50WT2 (UN)

NO.	DATE	REMARKS	BY
1	10/10/19	AS PER APPROVAL COMMENTS	DP

REVISIONS

Veritas STEEL
2-EAU CLAIRE, WI 3-WAUSAU, WI 4-PALATKA, FL
IAS 1605

STRUCTURE	CUY-010-1976L, OH-10 WESTBOUND OVER GCRTA BLUE AND GREEN LINES
LOCATION	CLEVELAND, OHIO CUYAHOGA COUNTY
PROJECT NO.	17-3000
ENGINEER	MICHAEL BAKER INTERNATIONAL
CONTRACTOR	KOKOSING
ITEM	ERECTION PLAN - SECTIONS
SURFACE PREP.	SEE P201 OPEN HOLES $1\frac{1}{16}$"Ø (U.N.O.)
PAINT	SEE P201

APPROVAL	DRAWN AM 06/04/19	SHEET NO.	PLANT	ORDER NO.
SHOP	CHECKED DP 07/10/19	E204	3	317023A

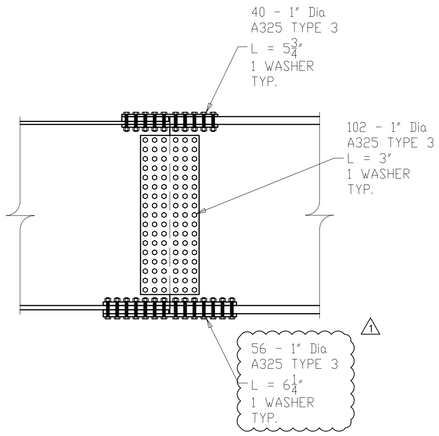

FIELD SPLICE #1
(X201M1)

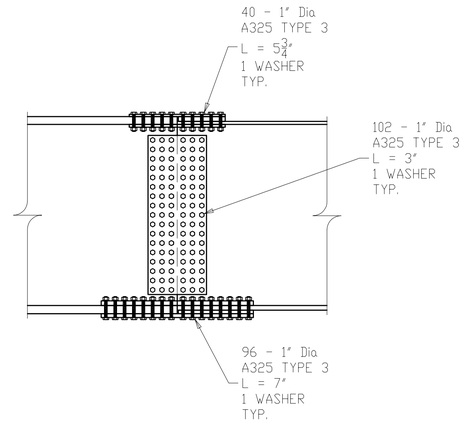

FIELD SPLICE #2
(X201M2)

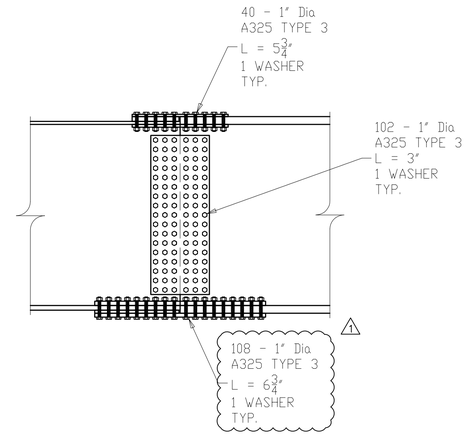

FIELD SPLICE #3
(X202M1)

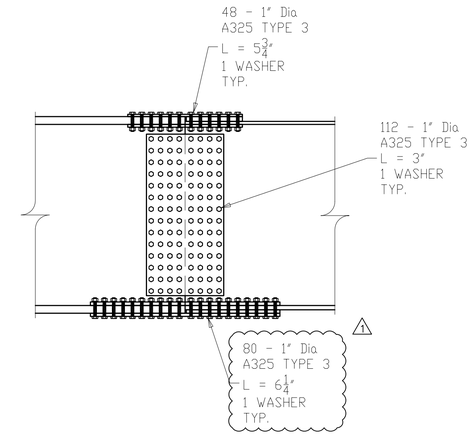

FIELD SPLICE #4
(X202M2)

NOTES:
1. FOR GENERAL NOTES SEE SHEET GN201.
2. ALL MATERIAL A709-50WT2 (UN)

NO.	DATE	REMARKS	BY
1	10/10/19	AS PER APPROVAL COMMENTS	DP

REVISIONS

Veritas STEEL
2-EAU CLAIRE, WI 3-WAUSAU, WI 4-PALATKA, FL
IAENCA 1605

STRUCTURE: CUY-010-1976L, OH-10 WESTBOUND OVER GCRTA BLUE AND GREEN LINES
LOCATION: CLEVELAND, OHIO CUYAHOGA COUNTY
PROJECT NO.: 17-3000
ENGINEER: MICHAEL BAKER INTERNATIONAL
CONTRACTOR: KOKOSING

ITEM: ERECTION PLAN - FIELD SPLICES
SURFACE PREP.: SEE P201 OPEN HOLES: $1\frac{1}{16}$"Ø (U.N.O.)
PAINT: SEE P201

APPROVAL	DRAWN AM 06/04/19	SHEET NO.	PLANT	ORDER NO.
SHOP	CHECKED DP 07/10/19	E205	3	317023A

ALL STEEL SHALL BE ERECTED WITH THE "SHIPPING MARK" IN THE SAME RELATIVE POSITION AS SHOWN ON THE ERECTION PLAN

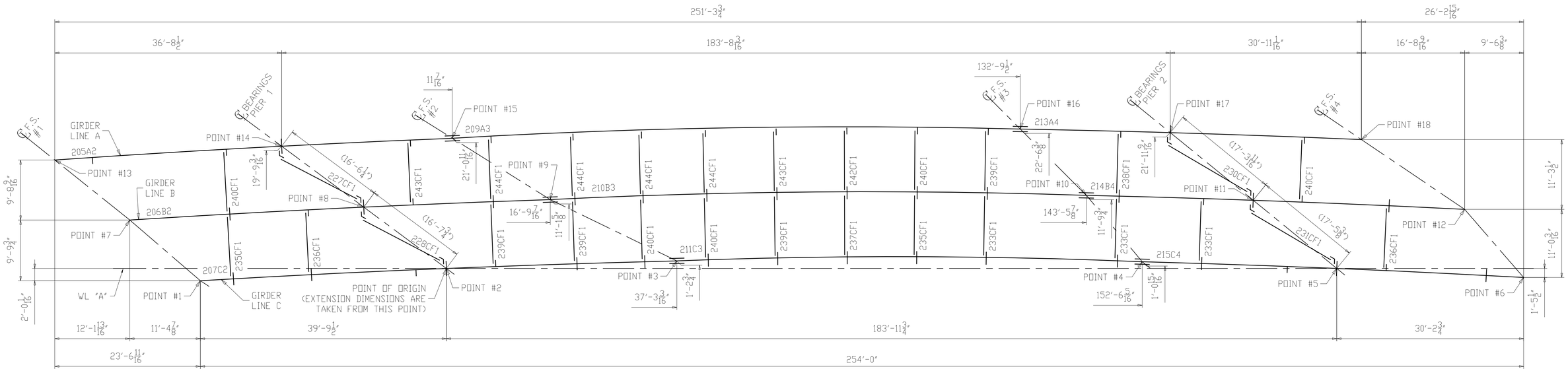

PLAN OF ASSEMBLY

ASSEMBLY IS IN TRUE FIELD POSITION

NO OUT OF PLUMB

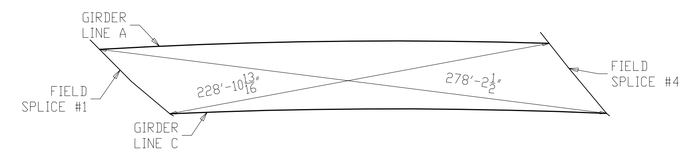

CROSS CORNER CHECK DIMENSIONS

POINT	TOP OF STEEL	BOTTOM OF STEEL
#1	6'-3 13/16"	1'-0 11/16"
#2	7'-0⅛"	1'-9"
#3	7'-11 3/16"	2'-8 1/16"
#4	9'-11 9/16"	4'-8 9/16"
#5	10'-1 1/16"	4'-10 1/16"
#6	10'-2 3/16"	4'-11 3/16"
#7	5'-10 11/16"	7 9/16"
#8	6'-6¾"	1'-3⅝"
#9	7'-3 11/16"	2'-0 9/16"
#10	9'-7"	4'-4"
#11	9'-9 1/16"	4'-6 1/16"
#12	9'-11½"	4'-8½"
#13	5'-7⅛"	4"
#14	6'-2 15/16"	11 13/16"
#15	6'-11 3/16"	1'-8 1/16"
#16	9'-3⅞"	4'-0⅞"
#17	9'-6⅛"	4'-3⅛"
#18	9'-9⅜"	4'-6⅜"

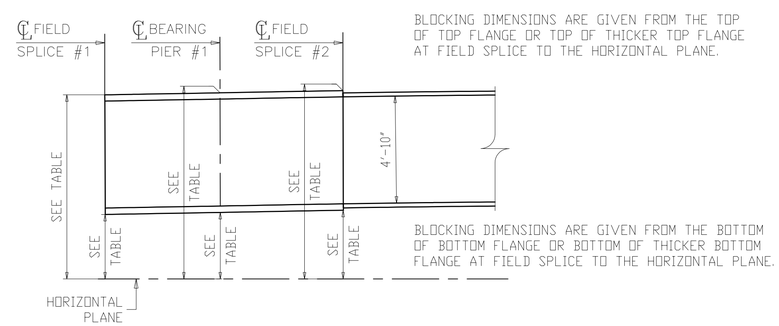

TYPICAL GIRDER ELEVATIONS

NOTES:
1. FOR GENERAL NOTES SEE SHEET GN201.
2. ALL DIMENSIONS ALONG AND PERPENDICULAR TO WL "A" ARE GIVEN IN THE HORIZONTAL PLANE AT THE BOTTOM OF BOTTOM FLANGE.
3. (16'-6¼") DENOTES DISTANCE C/C GIRDER ALONG CL BRG. IN THE HORIZONTAL PLANE.
4. EXTENSION DIMENSIONS ARE TAKEN FROM POINT OF ORIGIN.

NO.	DATE	REMARKS	BY

REVISIONS

Veritas STEEL
2-EAU CLAIRE, WI 3-WAUSAU, WI 4-PALATKA, FL
IAS 1605

STRUCTURE	CUY-010-1976L, OH-10 WESTBOUND OVER GCRTA BLUE AND GREEN LINES
LOCATION	CLEVELAND, OHIO CUYAHOGA COUNTY
PROJECT NO.	17-3000
ENGINEER	MICHAEL BAKER INTERNATIONAL
CONTRACTOR	KOKOSING
ITEM	FULL ASSEMBLY DIAGRAM
SURFACE PREP.	SEE P201
OPEN HOLES	1 1/16"Ø (U.N.O.)
PAINT	SEE P201

APPROVAL	DRAWN AM 07/31/19	SHEET NO.	PLANT	ORDER NO.
SHOP	CHECKED EG 08/01/19	FA201	3	317023A

LINE	SHIP MARK	NO. OF PCS.	ASS'Y MARK	MATERIAL SHAPE	LENGTH FT.	LENGTH IN.	MATERIAL SPEC.	ITEM NO.	REMARKS
1				FIELD BOLT					5% + 5 ADDED
2		1517	bgf3	1Ø HSB		2 1/2	A325-3	2110	ACT. CT.=1440 PLAIN
3		1761	bgk3	1Ø HSB		3	A325-3	2111	ACT. CT.=1672 PLAIN
4		157	bgm3	1Ø HSB		3 1/4	A325-3	2112	ACT. CT.=144 PLAIN
5		711	bkg3	1Ø HSB		5 3/4	A325-3	2114	ACT. CT.=672 PLAIN
6		577	bkf3	1Ø HSB		6 1/4	A325-3	2113	ACT. CT.=544 PLAIN
7		459	bkg3	1Ø HSB		6 3/4	A325-3	2115	ACT. CT.=432 PLAIN
8		409	bkk3	1Ø HSB		7	A325-3	2116	ACT. CT.=384 PLAIN
9		5591	nd3	1Ø HHN			A563-DH3	2117	PLAIN
10		5591	wd3	1Ø HSW			F436-3	2118	PLAIN
11		119	bgf2	1Ø HSB		2 1/2	A325-1	2153	ACT. CT.=108 GALV.
12		119	nd2	1Ø HHN			A563-DH	2154	GALV.
13		119	wd2	1Ø HSW			F436-1	2155	GALV.

ROTATIONAL CAPACITY TESTING REQUIRED

FIELD BOLT LIST — A325 TYPE 3 BOLTS

LINE	NO REQ'D	BOLT DIAM.	BOLT LEN.	BOLTS /CONN.	NO OF /CONN.	GRIP	THICK. OF PCS. CONNECTED						WASH CODE	PIECES CONNECTED AND REMARKS
1														
2	144	1"	3 1/4"	24	5	1 1/8"	1/2"	1 1/8"					1	PIER K-FRAMES TO GIRDER
3	1440	1"	2 1/2"	24	60	1"	1/2"	1/2"					1	INTERMEDIATE K-FRAMES TO GIRDER
4	480	1"	5 3/4"	40	12	4 1/8"	3/4"	2 1/2"	7/8"				1	TOP FLANGE - FIELD SPLICE #1, #2 & #3
5	192	1"	5 3/4"	48	4	4 1/8"	3/4"	2 1/2"	7/8"				1	TOP FLANGE - FIELD SPLICE #4
6	1224	1"	3"	102	12	1 1/2"	7/16"	5/8"	7/16"				1	WEB - FIELD SPLICE #1, #2 & #3
7	448	1"	3"	112	4	1 1/2"	7/16"	5/8"	7/16"				1	WEB - FIELD SPLICE #4
8	224	1"	6 1/4"	56	4	4 3/4"	1"	2 5/8"	1 1/8"				1	BOTTOM FLANGE - FIELD SPLICE #1
9	384	1"	7"	96	4	5 3/8"	1 1/4"	2 5/8"	1 1/2"				1	BOTTOM FLANGE - FIELD SPLICE #2
10	432	1"	6 3/4"	108	4	5 1/8"	1 1/4"	2 1/2"	1 5/8"				1	BOTTOM FLANGE - FIELD SPLICE #3
11	320	1"	6 1/4"	80	4	4 5/8"	1"	2 1/2"	1 1/8"				1	BOTTOM FLANGE - FIELD SPLICE #4

WASHER CODES: 1 = 1 HARD FLAT WASHER

FIELD BOLT LIST — A325 TYPE 1 GALV. BOLTS

LINE	NO REQ'D	BOLT DIAM.	BOLT LEN.	BOLTS /CONN.	NO OF /CONN.	GRIP	THICK. OF PCS. CONNECTED						WASH CODE	PIECES CONNECTED AND REMARKS
1	60	1"	2 1/2"	10	6	1"	1/2"	1/2"					1	ABUTMENT K-FRAMES TO GIRDER
2	48	1"	2 1/2"	24	2	1"	1/2"	1/2"					1	INTERMEDIATE K-FRAMES TO GIRDER

WASHER CODES: 1 = 1 HARD FLAT WASHER

NOTES:
1. FOR GENERAL NOTES SEE SHEET GN201.

NO.	DATE	REMARKS	BY
1	10/10/19	AS PER APPROVAL COMMENTS	DP

REVISIONS

Veritas STEEL
2-EAU CLAIRE, WI 3-WAUSAU, WI 4-PALATKA, FL
TENCA 1605

STRUCTURE: CUY-010-1976L, OH-10 WESTBOUND OVER GCRTA BLUE AND GREEN LINES
LOCATION: CLEVELAND, OHIO CUYAHOGA COUNTY
PROJECT NO.: 17-3000
ENGINEER: MICHAEL BAKER INTERNATIONAL
CONTRACTOR: KOKOSING

ITEM: FIELD BOLTS
SURFACE PREP.: SEE P201 OPEN HOLES: 1 1/16"Ø (U.N.O.)
PAINT: SEE P201

APPROVAL	DRAWN AM 06/04/19	SHEET NO.	PLANT	ORDER NO.
SHOP	CHECKED DP 07/10/19	FB201	3	317023A-86

GENERAL NOTES

GENERAL SPECIFICATIONS:

1. THE STANDARD SPECIFICATIONS OF THE STATE OF OHIO, DEPARTMENT OF TRANSPORTATION, INCLUDING CHANGES AND SUPPLEMENTAL SPECIFICATIONS LISTED IN THE PROPOSAL SHALL GOVERN THIS IMPROVEMENT.
2. THIS STRUCTURE CONFORMS TO THE "LRFD BRIDGE DESIGN SPECIFICATIONS", 7TH EDITION, ADOPTED BY THE AMERICAN ASSOCIATION OF STATE HIGHWAY AND TRANSPORTATION OFFICIALS, SEVENTH EDITION, INCLUDING THE 2015 INTERIM REVISIONS AND ODOT BRIDGE DESIGN MANUAL, 2007 (DATED 07-15-16).
3. CURRENT EDITION OF THE ANSI/AASHTO/AWS D1.5 BRIDGE WELDING CODE AS AMENDED BY SUPPLEMENT 1011.

MATERIAL SPECIFICATIONS:

1. ALL STRUCTURAL STEEL SHALL BE ASTM A709 GRADE 50W, UNLESS NOTED OTHERWISE. 1
2. FOR NOT PAINTED CONNECTIONS HIGH STRENGTH BOLTS SHALL BE A325 TYPE 3 WITH ASTM F436-3 WASHERS AND ASTM A563 GRADE DH3 NUTS.
   FOR CONNECTIONS WITHIN THE 10' PAINTING LIMITS HIGH STRENGTH BOLTS SHALL BE A325 TYPE 1 GALVANIZED WITH ASTM F436-1 GALV. WASHERS AND ASTM A563 GRADE DH GALV. NUTS.

MATERIAL TESTING:

1. ALL ITEMS DESIGNATED AS "CVN" OR "T2" ON THE SHOP DETAIL DRAWINGS SHALL MEET THE ZONE 2 CHARPY V-NOTCH TESTING REQUIREMENTS NOTED BELOW:

- A709-50WT2 (THK UP 2") : 15 FT-LBS @ 40°F "H" FREQ.
- A709-50WT2 (THK OVER 2") : 20 FT-LBS @ 40°F "H" FREQ.

FABRICATION:

1. BOLT HEADS SHALL BE PLACED ON THE EXPOSED SIDE OF THE EXTERIOR GIRDER WEBS AND THE BOTTOM SIDE OF THE GIRDER FLANGES WHEREVER POSSIBLE
2. THE METHOD OF TIGHTENING SHALL BE TURN OF NUT. A HARDENED WASHER SHALL BE PLACED UNDER THE TURNED NUT.
3. THREADS SHALL BE EXCLUDE FROM THE SHEAR PLANE.
4. PREPARE FAYING SURFACES OF PIER, ABUTMENT AND INTERMEDIATE K-FRAME BOLTED CONNECTIONS TO PROVIDE CLASS B SURFACES.
5. SPLICE PLATE EDGE DISTANCES REQUIRE GAS CUT OR ROLLED EDGES.

WELDING:

1. WELDING SHALL BE IN ACCORDANCE WITH THE CURRENT EDITION OF THE ANSI/AASHTO/AWS D1.5 BRIDGE WELDING CODE AS AMENDED BY SUPPLEMENT 1011.
2. FILLET WELDS SHALL BE TERMINATED AS SHOWN IN DETAILS "WS1" & "WS2".
3. ALL SHEAR STUDS TO BE APPLIED IN THE FIELD BY OTHERS.
4. WELD DESCRIPTION TABLE : 1

WELD JOINTS	WP	VERITAS WPS #
WEB & FLG CJP BUTTWELDS $\frac{1}{2}$" TO 2"	WP1	2W
WEB & FLG CJP BUTTWELDS OVER 2"	WP2	3W
WEB TO FLANGE FILLET WELDS	WP3	6W OR 6BW
STIFFENER TO WEB FILLET WELDS	WP4	5W OR 7W
STIFFENER TO FLANGE FILLET WELDS	WP5	4W1 OR 5W OR 8W
CROSS FRAME FILLET WELDS	WP6	4W1 OR 5W OR 8W
OTHER MISC. FILLET WELDS	WP7	4W1 OR 5W OR 8W

WELD INSPECTION:

1. "RT" - INDICATES RADIOGRAPH TESTING.
2. "MT" - INDICATES MAG-PARTICLE INSPECTION.
3. FILLET WELDS SHALL BE TESTED AS FOLLOWS:
   -MT: AT LEAST 1' IN EVERY 10', OR FRACTION THEREOF, FOR EACH SIZE OF WELD IN: FLANGE TO WEB WELDS INCLUDING ENDS OF GIRDERS AFTER TRIMMING, BEARING STIFFENERS WELDS, CROSS FRAME WELDS AND THOSE SPECIFIED IN THE D1.5.
4. BUTT WELDS SHALL BE TESTED AS FOLLOWS:
   -BUTT WELDS IN GIRDER WEBS: RT 100% TOP AND BOTTOM 1/3 OF ALL WEB BUTT WELDS.
   -BUTT WELDS IN GIRDER COMPRESSION FLANGES: RT 100% FULL LENGTH OF ALL FLANGE BUTT WELDS.
   -BUTT WELDS IN GIRDER TENSION FLANGES: RT 100% FULL LENGTH OF ALL FLANGE BUTT WELDS.

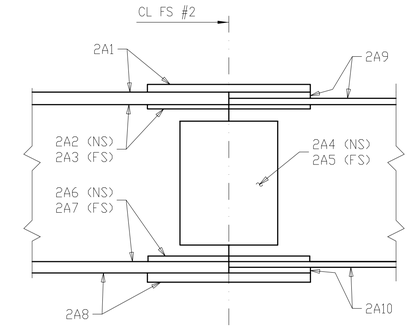

SHOP MATCH MARKING SCHEME

SHOP TO PREFIX MATCH-MARKS WITH LINE MARK

EXAMPLE 2 A 1
F.S. NUMBER — LINE — PART IDEN.

SHOP NOTE FOR MATCH MARKING SPLICE MATERIAL

THE INTERSECTION OF A GIRDER LINE LETTER AND JOINT NUMBER WILL FORM AN IDENTIFICATION MATCH (EXAMPLE FS #2). THIS MARK WILL BE PLACED ON THE ENDS OF THE GIRDERS AT THE FIELD SPLICES. ALL SPLICE MATR'L WILL BE MARKED WITH THE IDENTIFICATION MATCH MARK PLUS A DIFFERENT SUFFIX NUMERAL FOR EACH INDIVIDUAL PIECE OF SPLICE MATR'L. (EXAMPLE: 2A1) CORRESPONDING MARKS ALSO WILL BE AFFIXED ON THE GIRDERS. THE MARKS MUST BE POSITIONED TO PREVENT INTER-CHANGE OR ROTATION OF THE SPLICE MATR'L. MATCH MARKS SHALL BE PLACED ON THE OUTSIDE FACE OF THE SPLICE MATR'L WITH MARKS OPPOSITE EACH OTHER IN AN OFFCENTER OF PLATE POSITION AND SHALL BE CLEARLY MADE WITH 1/2" SIZE STEEL NUMBERING DIES.

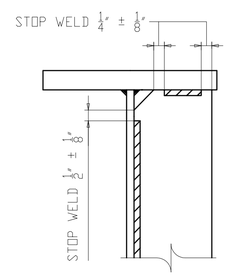

DETAIL "WS1"
STIFF. WELD TERMINATION

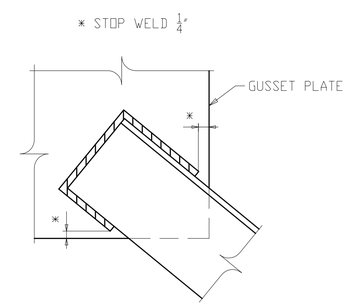

DETAIL "WS2"
CROSSFRAME WELD TERMINATION

NOTE TO ENGINEER:
THESE NOTES ARE NOT INTENDED TO BE ALL INCLUSIVE AND COMPLIANCE WITH RELEVANT SPECIFICATIONS REMAIN UNCHANGED.

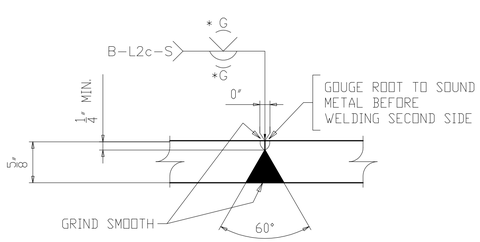

WEB PLATE SPLICE DETAIL "WB"

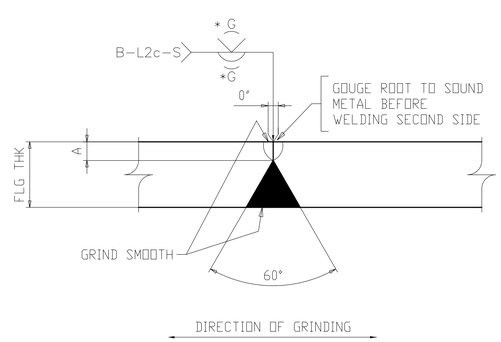

FLANGE PLATE SPLICE DETAIL "FA"

FLG THK	"A"
1"	$\frac{1}{4}$"
$1\frac{3}{8}$"	$\frac{3}{8}$"
$1\frac{1}{2}$"	$\frac{3}{8}$"

* GRIND WEB SPLICES ONLY WHERE RADIOGRAPHED, EXCEPT GRIND OUTSIDE FASCIA SURFACES THE FULL ASSEMBLY AND ALL BOTTOMS OF TOP AND BOTTOM FLANGES.

NO.	DATE	REMARKS	BY
1	10/10/19	AS PER APPROVAL COMMENTS	DP

REVISIONS

Veritas STEEL
2-EAU CLAIRE, WI 3-WAUSAU, WI 4-PALATKA, FL
TENCA 1605

STRUCTURE	CUY-010-1976L, OH-10 WESTBOUND OVER GCRTA BLUE AND GREEN LINES
LOCATION	CLEVELAND, OHIO CUYAHOGA COUNTY
PROJECT NO.	17-3000
ENGINEER	MICHAEL BAKER INTERNATIONAL
CONTRACTOR	KOKOSING
ITEM	GENERAL NOTES
SURFACE PREP.	SEE P201
OPEN HOLES	$1\frac{1}{16}$"Ø (U.N.O.)
PAINT	SEE P201

APPROVAL	DRAWN AM 06/21/19	SHEET NO.	PLANT	ORDER NO.
SHOP	CHECKED DP 07/10/19	GN201	3	317023A

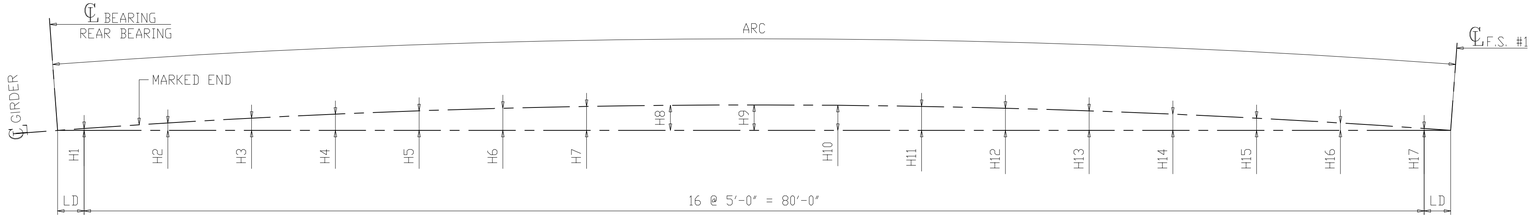

HORIZONTAL CURVE DIAGRAM FOR 201A1 & 202B1

(DIMENSIONS ARE ALONG BOTTOM OF WEB)

MARK	ARC	LD	H1	H2	H3	H4	H5	H6	H7	H8	H9	H10	H11	H12	H13	H14	H15	H16	H17
201A1	83'-10 15/16"	1'-11 7/16"	7/16"	1 7/16"	2 5/16"	3 1/16"	3 5/8"	4 1/8"	4 7/16"	4 5/8"	4 11/16"	4 5/8"	4 7/16"	4 1/8"	3 5/8"	3 1/16"	2 5/16"	1 7/16"	7/16"
202B1	88'-7 5/16"	4'-3 5/8"	1"	2"	2 7/8"	3 5/8"	4 3/16"	4 11/16"	5"	5 3/16"	5 1/4"	5 3/16"	5"	4 11/16"	4 3/16"	3 5/8"	2 7/8"	2"	1"

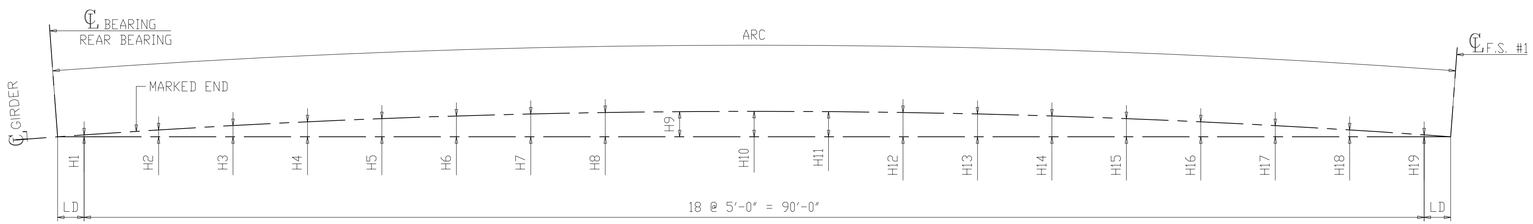

HORIZONTAL CURVE DIAGRAM FOR 203C1 & 204D1

(DIMENSIONS ARE ALONG BOTTOM OF WEB)

MARK	ARC	LD	H1	H2	H3	H4	H5	H6	H7	H8	H9	H10	H11	H12	H13	H14	H15	H16	H17	H18	H19
203C1	92'-6 5/8"	1'-3 1/4"	5/16"	1 7/16"	2 1/2"	3 3/8"	4 1/8"	4 11/16"	5 3/16"	5 1/2"	5 11/16"	5 13/16"	5 11/16"	5 1/2"	5 3/16"	4 11/16"	4 1/8"	3 3/8"	2 1/2"	1 7/16"	5/16"
204D1	99'-10 15/16"	4'-11 7/16"	1 1/4"	2 7/16"	3 7/16"	4 5/16"	5 1/16"	5 11/16"	6 3/16"	6 1/2"	6 11/16"	6 3/4"	6 11/16"	6 1/2"	6 3/16"	5 11/16"	5 1/16"	4 5/16"	3 7/16"	2 7/16"	1 1/4"

NO.	DATE	REMARKS	BY
△			

REVISIONS

Veritas STEEL
2-EAU CLAIRE, WI 3-WAUSAU, WI 4-PALATKA, FL
TENCA 1605

STRUCTURE: CUY-010-1976L, OH-10 WESTBOUND OVER GCRTA BLUE AND GREEN LINES
LOCATION: CLEVELAND, OHIO CUYAHOGA COUNTY
PROJECT NO.: 17-3000
ENGINEER: MICHAEL BAKER INTERNATIONAL
CONTRACTOR: KOKOSING

ITEM: HORIZONTAL CURVING DIAGRAMS
SURFACE PREP.: SEE P201 OPEN HOLES: 1 1/16"Ø (U.N.O.)
PAINT: SEE P201

APPROVAL	DRAWN AM 06/12/19	SHEET NO.	PLANT	ORDER NO.
SHOP	CHECKED DP 07/10/19	HC201	3	317023A

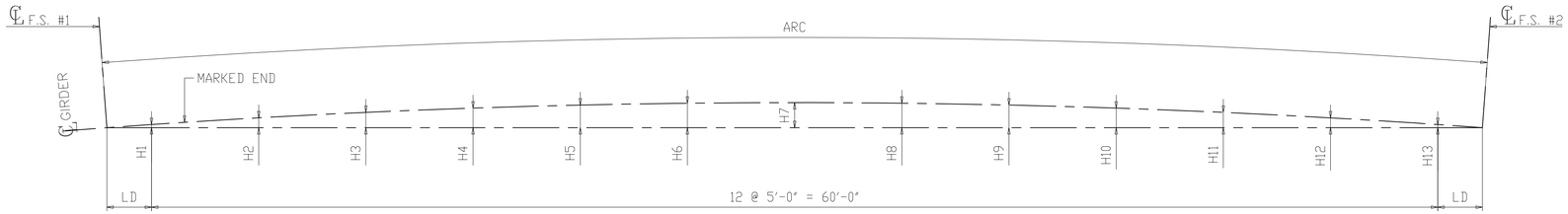

HORIZONTAL CURVE DIAGRAM FOR 205A2 & 206B2

(DIMENSIONS ARE ALONG BOTTOM OF WEB)

MARK	ARC	LD	H1	H2	H3	H4	H5	H6	H7	H8	H9	H10	H11	H12	H13
205A2	64'-5"	2'-2 1/2"	3/8"	1 1/8"	1 11/16"	2 3/16"	2 1/2"	2 11/16"	2 3/4"	2 11/16"	2 1/2"	2 3/16"	1 11/16"	1 1/8"	3/8"
206B2	68'-1 1/16"	4'-0 1/2"	11/16"	1 7/16"	2 1/16"	2 1/2"	2 7/8"	3 1/16"	3 1/8"	3 1/16"	2 7/8"	2 1/2"	2 1/16"	1 7/16"	11/16"

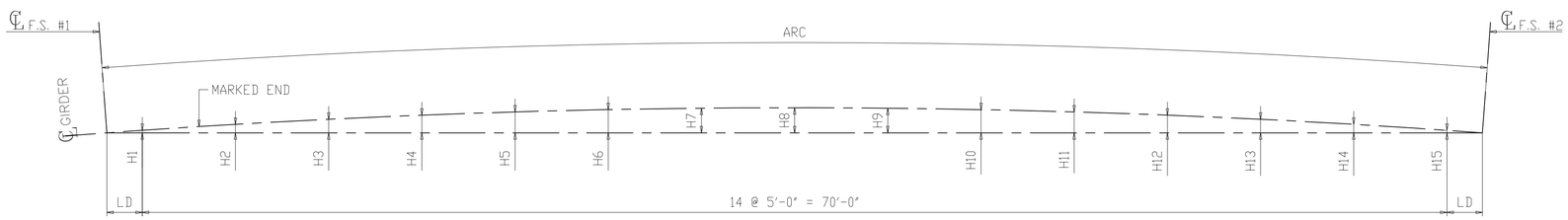

HORIZONTAL CURVE DIAGRAM FOR 207C2 & 208D2

(DIMENSIONS ARE ALONG BOTTOM OF WEB)

MARK	ARC	LD	H1	H2	H3	H4	H5	H6	H7	H8	H9	H10	H11	H12	H13	H14	H15
207C2	77'-1 3/4"	3'-6 7/8"	11/16"	1 9/16"	2 5/16"	2 15/16"	3 7/16"	3 3/4"	3 15/16"	4"	3 15/16"	3 3/4"	3 7/16"	2 15/16"	2 5/16"	1 9/16"	11/16"
208D2	72'-7"	1'-3 1/2"	1/4"	1 1/8"	1 7/8"	2 1/2"	2 15/16"	3 5/16"	3 1/2"	3 9/16"	3 1/2"	3 5/16"	2 15/16"	2 1/2"	1 7/8"	1 1/8"	1/4"

NO.	DATE	REMARKS	BY

REVISIONS

Veritas STEEL

2-EAU CLAIRE, WI 3-WAUSAU, WI 4-PALATKA, FL

IAS 1605

STRUCTURE	CUY-010-1976L, OH-10 WESTBOUND OVER GCRTA BLUE AND GREEN LINES
LOCATION	CLEVELAND, OHIO CUYAHOGA COUNTY
PROJECT NO.	17-3000
ENGINEER	MICHAEL BAKER INTERNATIONAL
CONTRACTOR	KOKOSING
ITEM	HORIZONTAL CURVING DIAGRAMS
SURFACE PREP.	SEE P201
OPEN HOLES	1 1/16"Ø (U.N.O.)
PAINT	SEE P201

APPROVAL	DRAWN AM 06/12/19	SHEET NO.	PLANT	ORDER NO.
SHOP	CHECKED DP 07/10/19	HC202	3	317023A

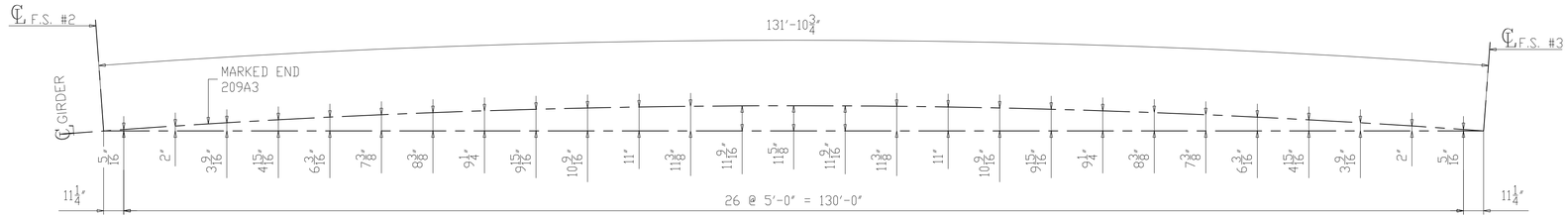

HORIZONTAL CURVE DIAGRAM FOR 209A3
(DIMENSIONS ARE ALONG BOTTOM OF WEB)

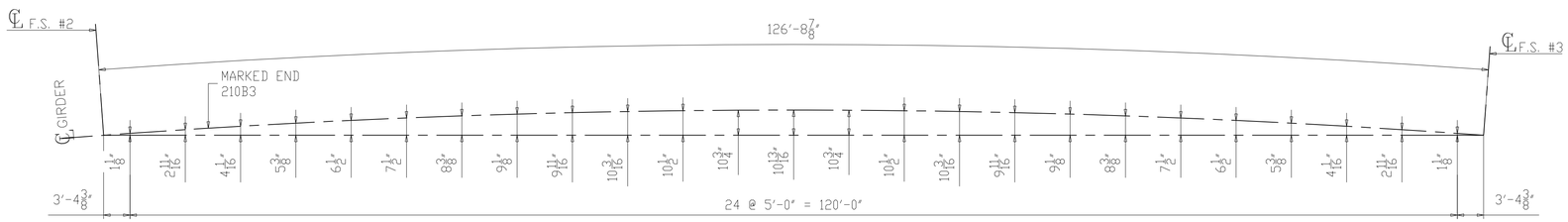

HORIZONTAL CURVE DIAGRAM FOR 210B3
(DIMENSIONS ARE ALONG BOTTOM OF WEB)

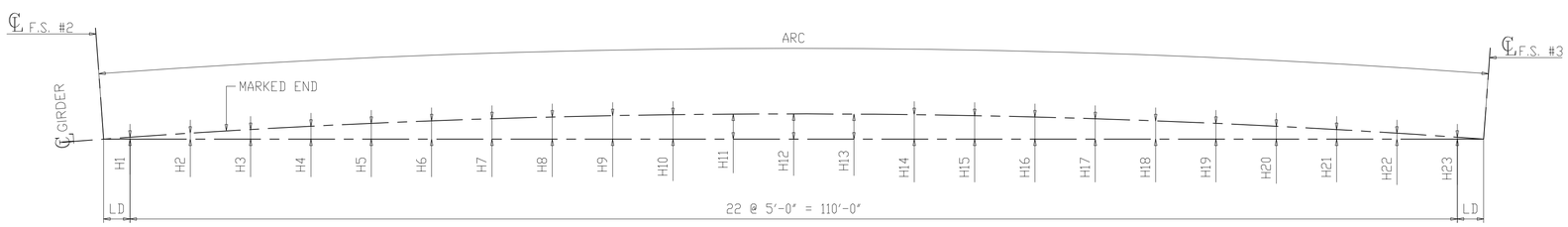

HORIZONTAL CURVE DIAGRAM FOR 211C3 & 212D3
(DIMENSIONS ARE ALONG BOTTOM OF WEB)

MARK	ARC	LD	H1	H2	H3	H4	H5	H6	H7	H8	H9	H10	H11	H12	H13	H14	H15	H16	H17	H18	H19	H20	H21	H22	H23
211C3	115'-3 1/2"	2'-7 11/16"	13/16"	2 1/4"	3 1/2"	4 5/8"	5 11/16"	6 9/16"	7 5/16"	7 7/8"	8 3/8"	8 11/16"	8 7/8"	9"	8 7/8"	8 11/16"	8 3/8"	7 7/8"	7 5/16"	6 9/16"	5 11/16"	4 5/8"	3 1/2"	2 1/4"	13/16"
212D3	118'-3 7/16"	4'-1 5/8"	1 1/4"	2 11/16"	4"	5 1/8"	6 3/16"	7 1/16"	7 13/16"	8 3/8"	8 7/8"	9 3/16"	9 7/16"	9 1/2"	9 7/16"	9 3/16"	8 7/8"	8 3/8"	7 13/16"	7 1/16"	6 3/16"	5 1/8"	4"	2 11/16"	1 1/4"

NO.	DATE	REMARKS	BY

REVISIONS

Veritas STEEL
2-EAU CLAIRE, WI 3-WAUSAU, WI 4-PALATKA, FL
TENCA 1605

STRUCTURE: CUY-010-1976L, OH-10 WESTBOUND OVER GCRTA BLUE AND GREEN LINES
LOCATION: CLEVELAND, OHIO CUYAHOGA COUNTY
PROJECT NO.: 17-3000
ENGINEER: MICHAEL BAKER INTERNATIONAL
CONTRACTOR: KOKOSING

ITEM: HORIZONTAL CURVING DIAGRAMS
SURFACE PREP.: SEE P201 OPEN HOLES: 1 1/16"Ø (U.N.O.)
PAINT: SEE P201

APPROVAL	DRAWN AM 06/12/19	SHEET NO.	PLANT	ORDER NO.
SHOP	CHECKED DP 07/10/19	HC203	3	317023A

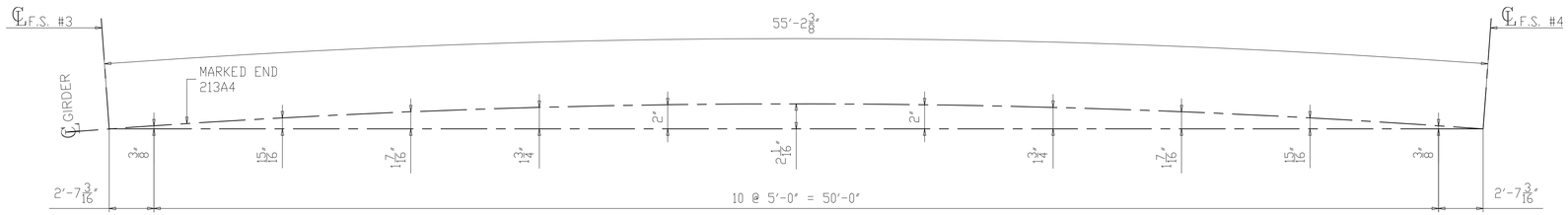

HORIZONTAL CURVE DIAGRAM FOR 213A4

(DIMENSIONS ARE ALONG BOTTOM OF WEB)

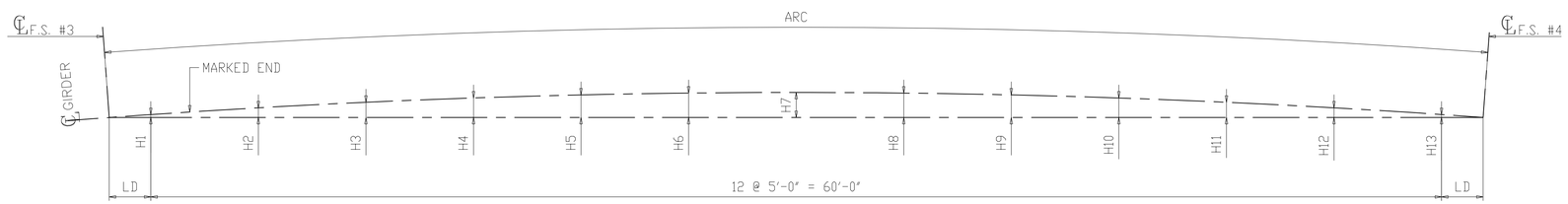

HORIZONTAL CURVE DIAGRAM FOR
214B4, 215C4 & 216D4

(DIMENSIONS ARE ALONG BOTTOM OF WEB)

MARK	ARC	LD	H1	H2	H3	H4	H5	H6	H7	H8	H9	H10	H11	H12	H13
214B4	61'-2 13/16"	7 3/8"	1/8"	13/16"	1 7/16"	1 15/16"	2 1/4"	2 7/16"	2 1/2"	2 7/16"	2 1/4"	1 15/16"	1 7/16"	13/16"	1/8"
215C4	61'-8 7/8"	10 7/16"	1/8"	7/8"	1 1/2"	1 15/16"	2 5/16"	2 1/2"	2 9/16"	2 1/2"	2 5/16"	1 15/16"	1 1/2"	7/8"	1/8"
216D4	61'-1 1/2"	6 3/4"	1/16"	13/16"	1 7/16"	1 15/16"	2 1/4"	2 7/16"	2 9/16"	2 7/16"	2 1/4"	1 15/16"	1 7/16"	13/16"	1/16"

NO.	DATE	REMARKS	BY

REVISIONS

Veritas STEEL

2-EAU CLAIRE, WI 3-WAUSAU, WI 4-PALATKA, FL

TENGA 1605

STRUCTURE: CUY-010-1976L, OH-10 WESTBOUND OVER GCRTA BLUE AND GREEN LINES

LOCATION: CLEVELAND, OHIO CUYAHOGA COUNTY

PROJECT NO.: 17-3000

ENGINEER: MICHAEL BAKER INTERNATIONAL

CONTRACTOR: KOKOSING

ITEM: HORIZONTAL CURVING DIAGRAMS

SURFACE PREP.: SEE P201 OPEN HOLES: 1 1/16"Ø (U.N.O.)

PAINT: SEE P201

APPROVAL	DRAWN AM 06/12/19	SHEET NO.	PLANT	ORDER NO.
SHOP	CHECKED DP 07/10/19	HC204	3	317023A

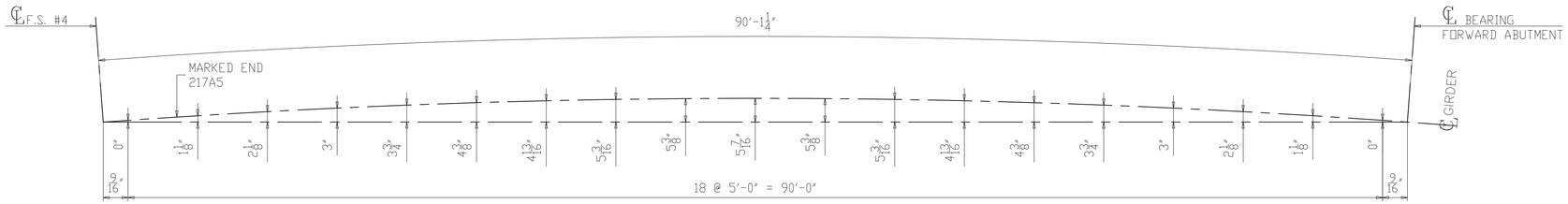

HORIZONTAL CURVE DIAGRAM FOR 217A5

(DIMENSIONS ARE ALONG BOTTOM OF WEB)

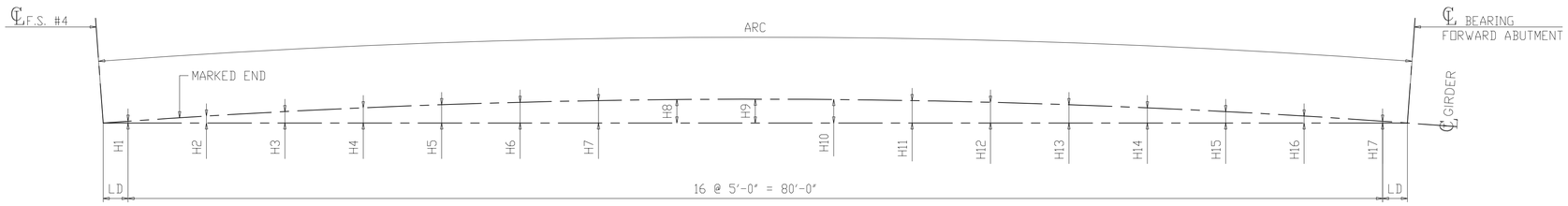

HORIZONTAL CURVE DIAGRAM FOR 218B5 & 219C5

(DIMENSIONS ARE ALONG BOTTOM OF WEB)

MARK	ARC	LD	H1	H2	H3	H4	H5	H6	H7	H8	H9	H10	H11	H12	H13	H14	H15	H16	H17
218B5	82'-5 1/2"	1'-2 3/4"	1/4"	1 1/4"	2 1/8"	2 7/8"	3 1/2"	3 15/16"	4 5/16"	4 1/2"	4 9/16"	4 1/2"	4 5/16"	3 15/16"	3 1/2"	2 7/8"	2 1/8"	1 1/4"	1/4"
219C5	82'-0 1/2"	1'-0 3/16"	1/4"	1 1/4"	2 1/8"	2 7/8"	3 7/16"	3 15/16"	4 1/4"	4 1/2"	4 9/16"	4 1/2"	4 1/4"	3 15/16"	3 7/16"	2 7/8"	2 1/8"	1 1/4"	1/4"

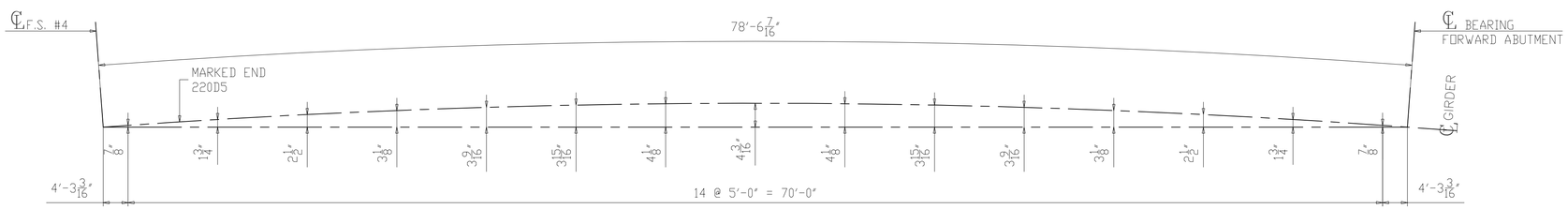

HORIZONTAL CURVE DIAGRAM FOR 220D5

(DIMENSIONS ARE ALONG BOTTOM OF WEB)

NO.	DATE	REMARKS	BY

REVISIONS

Veritas STEEL
2-EAU CLAIRE, WI 3-WAUSAU, WI 4-PALATKA, FL
IAS 1605

STRUCTURE	CUY-010-1976L, OH-10 WESTBOUND OVER GCRTA BLUE AND GREEN LINES
LOCATION	CLEVELAND, OHIO CUYAHOGA COUNTY
PROJECT NO.	17-3000
ENGINEER	MICHAEL BAKER INTERNATIONAL
CONTRACTOR	KOKOSING
ITEM	HORIZONTAL CURVING DIAGRAMS
SURFACE PREP.	SEE P201
OPEN HOLES	1 1/16"Ø (U.N.O.)
PAINT	SEE P201

APPROVAL	DRAWN AM 06/12/19	SHEET NO.	PLANT	ORDER NO.
SHOP	CHECKED DP 07/10/19	HC205	3	317023A

CLEANING & PAINTING NOTES

CLEANING:

1. ALL STEEL SHALL BE BLAST CLEANED TO "NEAR WHITE CONDITION" AS PER SSPC-SP10 PRIOR TO PAINTING. BLAST PROFILE SHALL BE 1.5-3.5 MILS.

2. SOLVENT CLEAN PER SSPC-SP1 AND RADIUS EDGES TO $\frac{1}{8}$" ± $\frac{1}{16}$" PRIOR TO BLASTING. INSPECT BLAST PROFILE PER ASTM D4417, METHOD C.

3. BEFORE THE NEW STEEL IS SHIPPED, SOLVENT CLEAN, WHERE NECESSARY, ALL SURFACES OF ASTM A709 GRADE 50W STEEL THAT ARE TO BE LEFT UNPAINTED TO REMOVE ALL TRACES OF ASPHALT CEMENT, OIL, GREASE, DIESEL FUEL DEPOSITS, CHALK, PAINT MARKS, AND OTHER SOLUBLE CONTAMINANTS ACCORDING TO SSPC-SP1 SOLVENT CLEANING.

   SHOP BLAST UNPAINTED GRADE 50W MATERIAL TO SSPC-SP6, COMMERCIAL BLAST. 1

PAINTING:

1. STEEL GIRDERS AND CROSS FRAMES WITHIN THE LAST 10 FEET OF THE SUPERSTRUCTURE SHALL BE PAINTED WITH A THREE-COAT INORGANIC ZINC PRIMER SHERWIN WILLIAMS PAINT SYSTEM IN ACCORDANCE WITH C&MS 514. 1ST COAT SHALL BE SHOP APPLIED. THE REMAINING COATS SHALL BE FIELD APPLIED. SEE SKETCH 1.
   - 1ST COAT & DFT: ZINC CLAD II PLUS, 3-5 MILS (MIN. SPOT THICKNESS 2.4 MILS, MAX SPOT THICKNESS 6 MILS).
   - 2ND COAT & DFT: FIELD APPLIED.
   - 3RD COAT & DFT: FIELD APPLIED.

2. THE COLOR SHALL BE BROWN PER FEDERAL STANDARD NO. 595B-20045 OR 20059 (THE COLOR OF WEATHERING STEEL).

3. APPLY A MIST COAT FROM 0.5 TO 1.5 MILS ON SURFACES OF TOP FLANGES EMBEDDED IN CONCRETE, SEE SECTION A-A.

4. APPLY A MIST COAT FROM 0.5 TO 1.5 MILS ON SURFACES WITHIN 2" OF FIELD WELDS (BEARING AREA FOR FIELD-APPLIED BEARINGS).

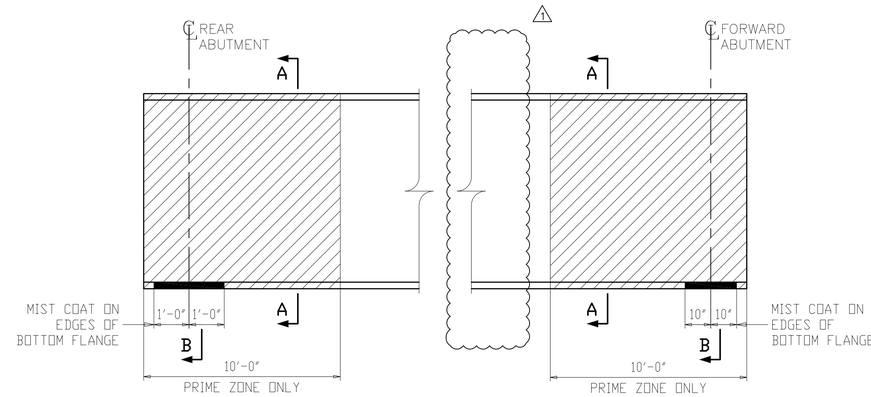

SKETCH 1
ALL GIRDER LINES

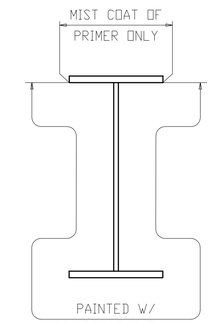

SECTION A-A
FOR PRIME ZONES ONLY

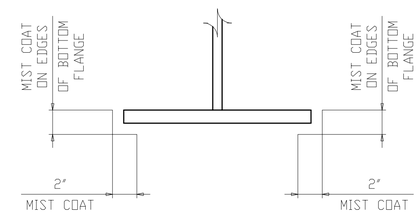

SECTION B
MASKING ZONE ON BEARING AREA ONLY

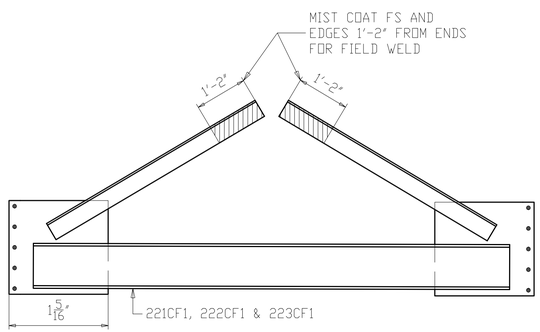

MASKING AT REAR ABUTMENT DIAPHRAGMS

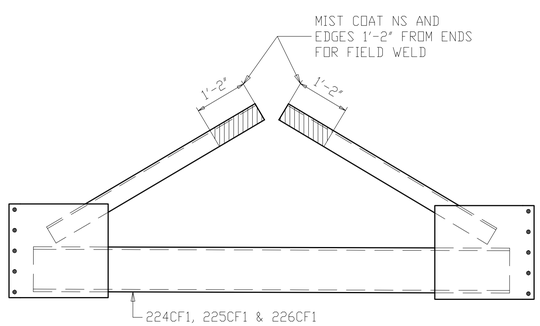

MASKING AT FORWARD ABUTMENT DIAPHRAGMS

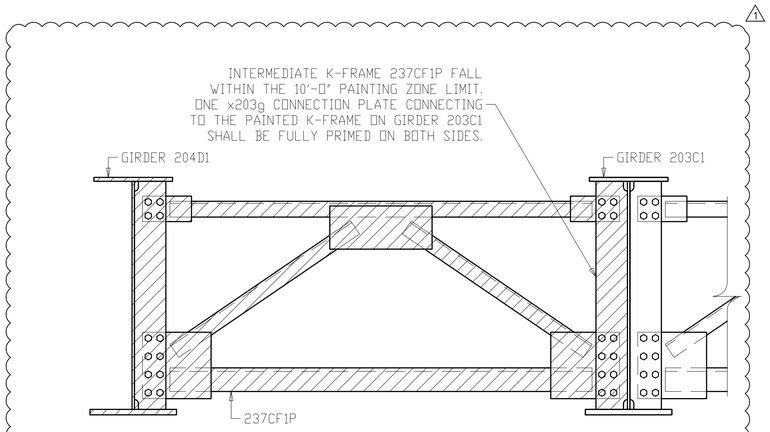

PRIMED ZONE FOR 237CF1P
LOOKING WEST

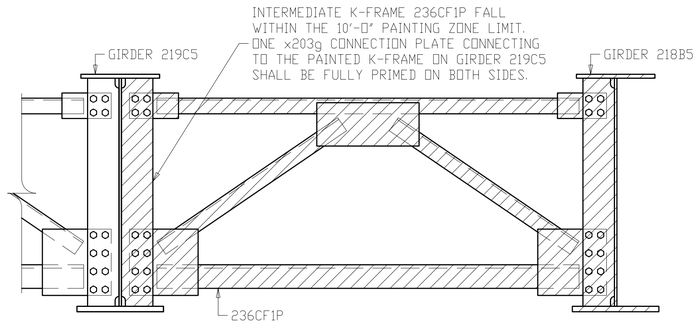

PRIMED ZONE FOR 236CF1P
LOOKING WEST

NOTE TO ENGINEER:
THESE NOTES ARE NOT INTENDED TO BE ALL INCLUSIVE AND COMPLIANCE WITH RELEVANT SPECIFICATIONS REMAIN UNCHANGED.

NO.	DATE	REMARKS	BY
1	10/10/19	AS PER APPROVAL COMMENTS	DP

REVISIONS

Veritas STEEL
2-EAU CLAIRE, WI 3-WAUSAU, WI 4-PALATKA, FL
TENCA 1605

STRUCTURE	CUY-010-1976L, OH-10 WESTBOUND OVER GCRTA BLUE AND GREEN LINES
LOCATION	CLEVELAND, OHIO CUYAHOGA COUNTY
PROJECT NO.	17-3000
ENGINEER	MICHAEL BAKER INTERNATIONAL
CONTRACTOR	KOKOSING
ITEM	PAINT NOTES
SURFACE PREP.	SEE P201
OPEN HOLES	$1\frac{1}{16}$"Ø (U.N.O.)
PAINT	SEE P201

APPROVAL	DRAWN AM 06/21/19	SHEET NO.	PLANT	ORDER NO.
SHOP	CHECKED DP 07/10/19	P201	3	317023A

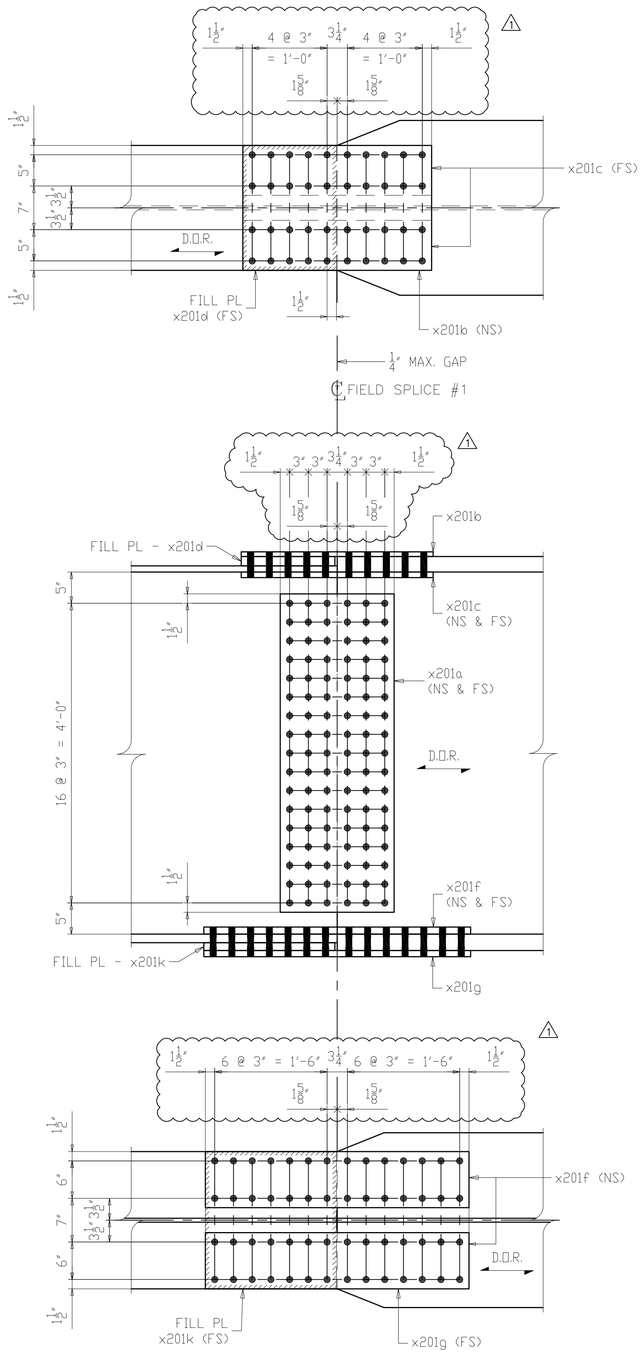

4 ~ FIELD SPLICE ~ X201M1

(DETAIL AT FS #1)
(LINE A THRU D)

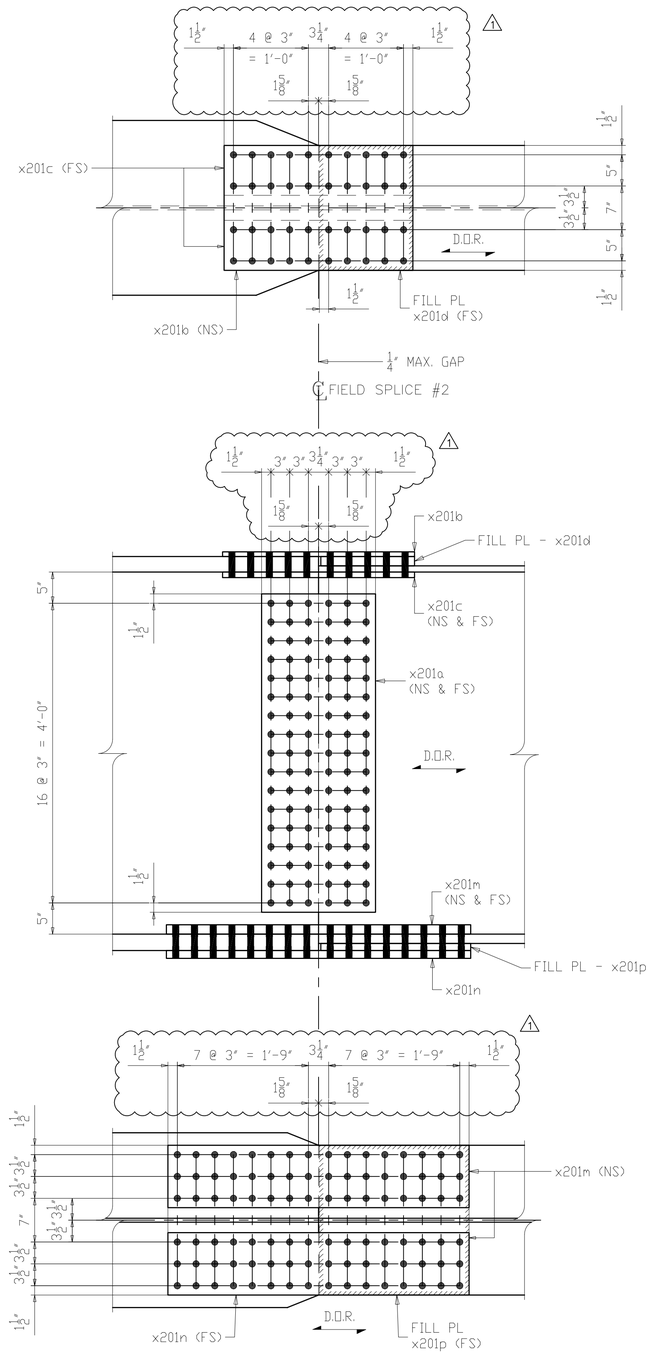

4 ~ FIELD SPLICE ~ X201M2

(DETAIL AT FS #2)
(LINE A THRU D)

	LINE	SHIP MARK	NO. OF PCS.	ASS'Y MARK	MATERIAL SHAPE	LENGTH FT.	LENGTH IN.	MATERIAL SPEC.	ITEM	REMARKS
△1	1	X201M1	4		FIELD SPLICE ASS'Y					5105
△1	2		8	x201a	PL 7/16 x 51	1	6 1/4	A709-50WT2	2062	CVN 923
△1	3		4	x201b	PL 3/4 x 20	2	6 1/4	A709-50WT2	2060	CVN 514
△1	4		8	x201c	PL 7/8 x 8	2	6 1/4	A709-50WT2	2061	CVN 480
	5		4	x201d	PL 1 1/2 x 15	1	8	A709-50WT2	2065	CVN 510
△1	6		8	x201f	PL 1 1/8 x 9	3	6 1/4	A709-50WT2	2063	CVN 970
△1	7		4	x201g	PL 1 x 22	3	6 1/4	A709-50WT2	2064	CVN 1053
	8		4	x201k	PL 1 1/4 x 21	1	10	A709-50WT2	2066	CVN 655
	9									
△1	10	X201M2	4		FIELD SPLICE ASS'Y					6443
△1	11		8	x201a	PL 7/16 x 51	1	6 1/4	A709-50WT2	2069	CVN 923
△1	12		4	x201b	PL 3/4 x 20	2	6 1/4	A709-50WT2	2067	CVN 514
△1	13		8	x201c	PL 7/8 x 8	2	6 1/4	A709-50WT2	2068	CVN 480
	14		4	x201d	PL 1 1/2 x 15	1	8	A709-50WT2	2072	CVN 510
△1	15		8	x201m	PL 1 1/2 x 10	4	0 1/4	A709-50WT2	2070	CVN 1641
△1	16		4	x201n	PL 1 1/4 x 24	4	0 1/4	A709-50WT2	2071	CVN 1641
	17		4	x201p	PL 1 1/8 x 24	2	0	A709-50WT2	2073	CVN 734

NOTES:
1. FOR GENERAL NOTES SEE SHEET GN201.
2. ALL MATERIAL A709-50WT2 (UN)
3. T2 - DENOTES MATERIAL SUBJECT TO CHARPY V-NOTCH TEST
- CVN = 15 FT-LBS @ 40°F "H" FREQ FOR THICKNESS UP 2".
- CVN = 20 FT-LBS @ 40°F "H" FREQ FOR THICKNESS OVER 2".
4. D.O.R. DENOTES DIRECTION OF MILL ROLLING

NO.	DATE	REMARKS	BY
△1	10/10/19	AS PER APPROVAL COMMENTS	DP

REVISIONS

Veritas STEEL
2-EAU CLAIRE, WI 3-WAUSAU, WI 4-PALATKA, FL
IENCA 1605

STRUCTURE: CUY-010-1976L, OH-10 WESTBOUND OVER GCRTA BLUE AND GREEN LINES
LOCATION: CLEVELAND, OHIO CUYAHOGA COUNTY
PROJECT NO.: 17-3000
ENGINEER: MICHAEL BAKER INTERNATIONAL
CONTRACTOR: KOKOSING
ITEM: FIELD SPLICE DETAILS
SURFACE PREP.: SEE P201 OPEN HOLES: $1\frac{1}{16}$"Ø (U.N.O.)
PAINT: SEE P201

APPROVAL	DRAWN AM 06/04/19	SHEET NO.	PLANT	ORDER NO.
SHOP	CHECKED DP 07/10/19	X201	3	317023A-31

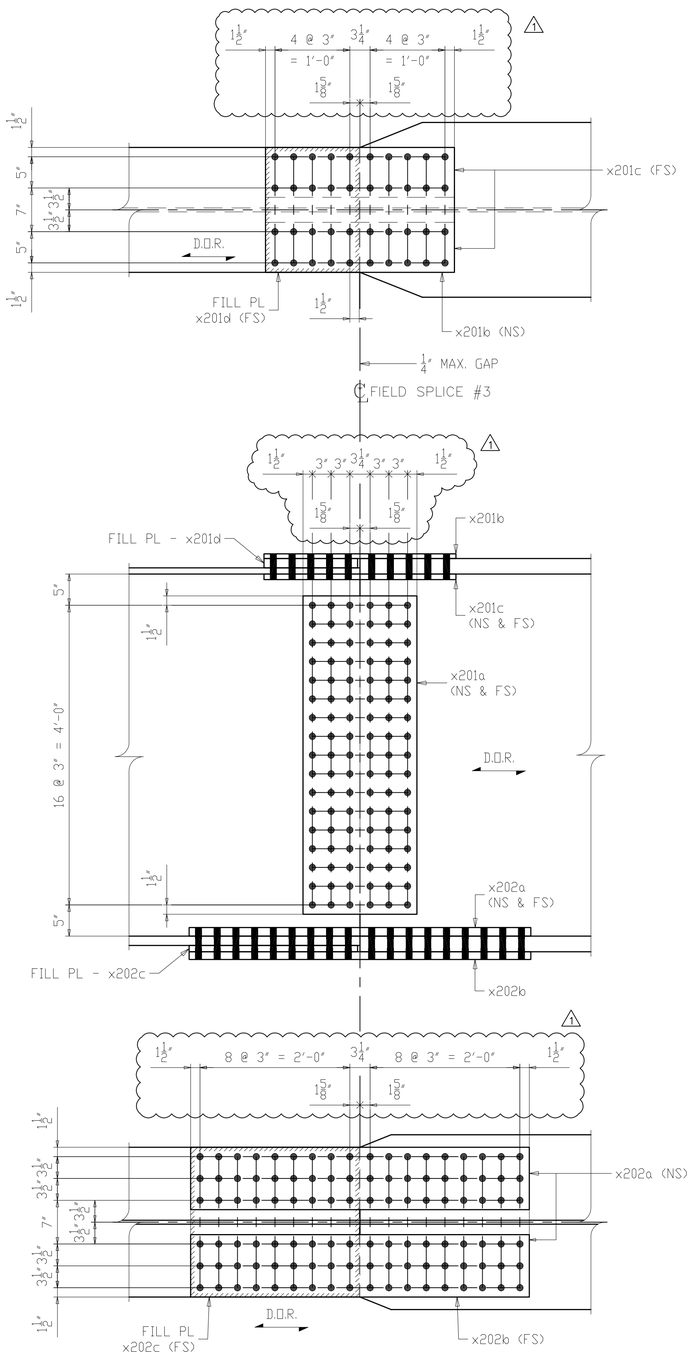

4 ~ FIELD SPLICE ~ X202M1

(DETAIL AT FS #3)

(LINE A THRU D)

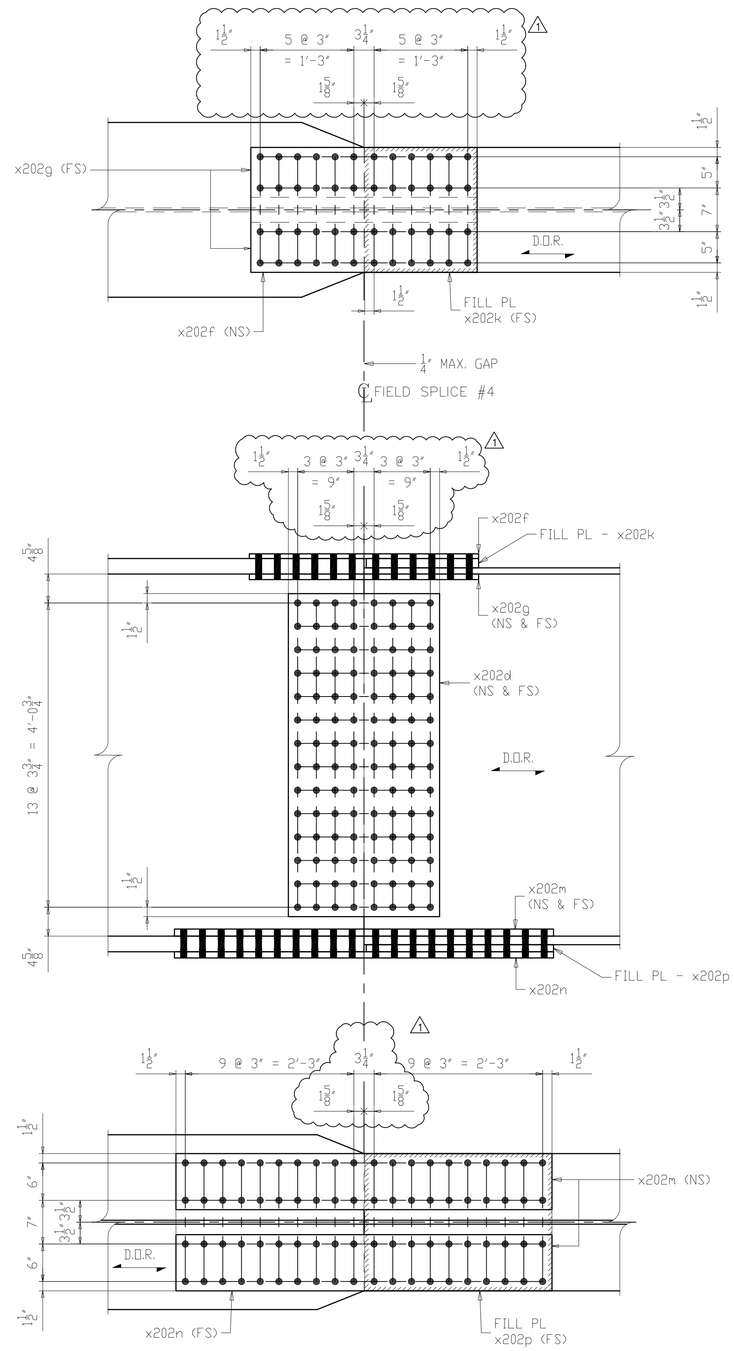

4 ~ FIELD SPLICE ~ X202M2

(DETAIL AT FS #4)

(LINE A THRU D)

	LINE	SHIP MARK	NO. OF PCS.	ASS'Y MARK	MATERIAL SHAPE	LENGTH FT.	LENGTH IN.	MATERIAL SPEC.	ITEM	REMARKS	
1	1	X202M1	4		FIELD SPLICE ASS'Y						6697
1	2		8	x201a	PL 7/16 x 51	1	6 1/4	A709-50WT2	2076	CVN	923
1	3		4	x201b	PL 3/4 x 20	2	6 1/4	A709-50WT2	2074	CVN	514
1	4		8	x201c	PL 7/8 x 8	2	6 1/4	A709-50WT2	2075	CVN	480
	5		4	x201d	PL 1 1/2 x 15	1	8	A709-50WT2	2079	CVN	510
1	6		8	x202a	PL 1 3/8 x 10	4	6 1/4	A709-50WT2	2077	CVN	1691
1	7		4	x202b	PL 1 1/4 x 24	4	6 1/4	A709-50WT2	2078	CVN	1845
	8		4	x202c	PL 1 x 24	2	3	A709-50WT2	2080	CVN	734
	9										
1	10	X202M2	4		FIELD SPLICE ASS'Y						6773
1	11		8	x202d	PL 7/16 x 51 3/4	2	0 1/4	A709-50WT2	2083	CVN	1244
1	12		4	x202f	PL 3/4 x 20	3	0 1/4	A709-50WT2	2081	CVN	616
1	13		8	x202g	PL 7/8 x 8	3	0 1/4	A709-50WT2	2082	CVN	575
	14		4	x202k	PL 1 1/2 x 18	1	8	A709-50WT2	2086	CVN	612
1	15		8	x202m	PL 1 1/8 x 9	5	0 1/4	A709-50WT2	2084	CVN	1383
1	16		4	x202n	PL 1 x 22	5	0 1/4	A709-50WT2	2085	CVN	1502
	17		4	x202p	PL 1 1/8 x 22	2	6	A709-50WT2	2087	CVN	841

NOTES:
1. FOR GENERAL NOTES SEE SHEET GN201.
2. ALL MATERIAL A709-50WT2 (UN)
3. T2 - DENOTES MATERIAL SUBJECT TO CHARPY V-NOTCH TEST
- CVN = 15 FT-LBS @ 40°F "H" FREQ FOR THICKNESS UP 2".
- CVN = 20 FT-LBS @ 40°F "H" FREQ FOR THICKNESS OVER 2".
4. D.O.R. DENOTES DIRECTION OF MILL ROLLING

NO.	DATE	REMARKS	BY
1	10/10/19	AS PER APPROVAL COMMENTS	DP

REVISIONS

Veritas STEEL
2-EAU CLAIRE, WI 3-WAUSAU, WI 4-PALATKA, FL
TENCA 1605

STRUCTURE: CUY-010-1976L, OH-10 WESTBOUND OVER GCRTA BLUE AND GREEN LINES
LOCATION: CLEVELAND, OHIO CUYAHOGA COUNTY
PROJECT NO.: 17-3000
ENGINEER: MICHAEL BAKER INTERNATIONAL
CONTRACTOR: KOKOSING
ITEM: FIELD SPLICE DETAILS
SURFACE PREP.: SEE P201 OPEN HOLES: 1 1/16"Ø (U.N.O.)
PAINT: SEE P201

APPROVAL	DRAWN AM 06/04/19	SHEET NO.	PLANT	ORDER NO.
SHOP	CHECKED DP 07/10/19	X202	3	317023A-31

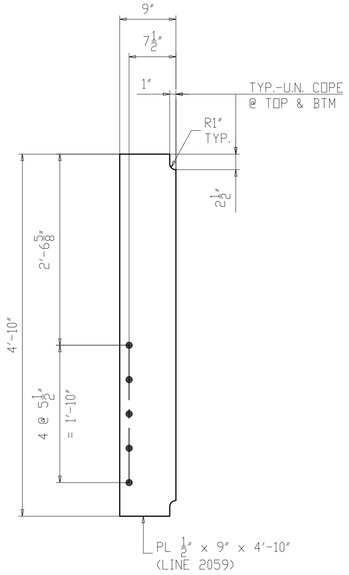

6 ~ ABUT. K-FRAME CONN. PL. ~ x203a
(@ REAR & FORWARD ABUTMENT)

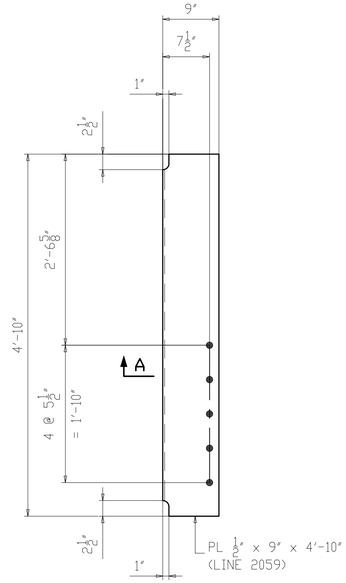

3 ~ ABUT. K-FRAME CONN. PL. ~ x203b
(@ REAR ABUTMENT)

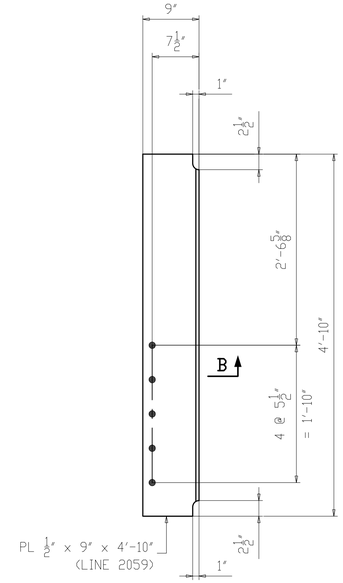

3 ~ ABUT. K-FRAME CONN. PL. ~ x203c
(@ FORWARD ABUTMENT)

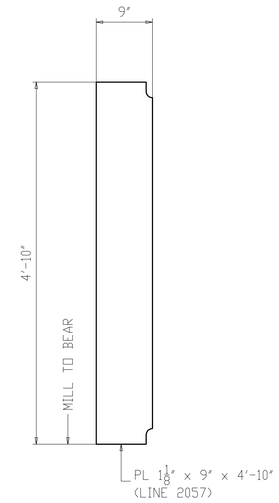

20 ~ BRG. STIFF. ~ x203d
(@ REAR & FORWARD ABUTMENT)
(@ PIER 1 & 2)

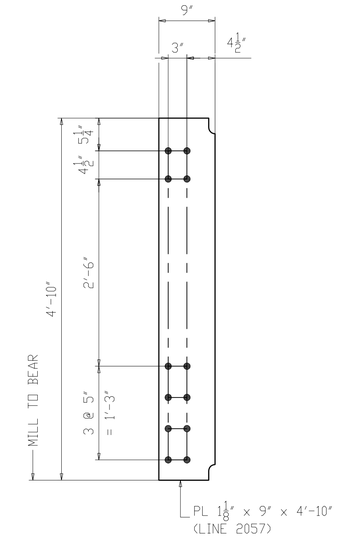

12 ~ BRG. STIFF. ~ x203f
(@ PIER 1 & 2)

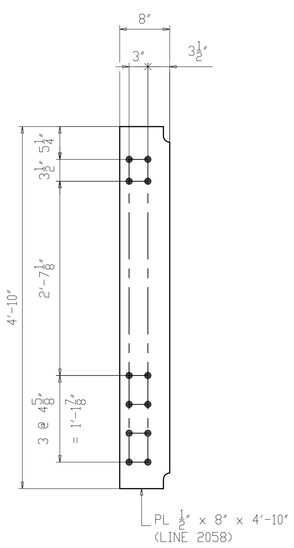

124 ~ INT. K-FRAME CONN. PL. ~ x203g
(@ SPAN 1, 2 & 3)

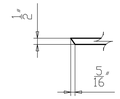

SECTION A

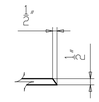

SECTION B

NOTES:
1. FOR GENERAL NOTES SEE SHEET GN201.
2. ALL MATERIAL A709-50WT2 (UN)

NO.	DATE	REMARKS	BY

REVISIONS

Veritas STEEL
2-EAU CLAIRE, WI 3-WAUSAU, WI 4-PALATKA, FL
IAS 1605

STRUCTURE	CUY-010-1976L, OH-10 WESTBOUND OVER GCRTA BLUE AND GREEN LINES
LOCATION	CLEVELAND, OHIO CUYAHOGA COUNTY
PROJECT NO.	17-3000
ENGINEER	MICHAEL BAKER INTERNATIONAL
CONTRACTOR	KOKOSING
ITEM	GIRDER DETAILS
SURFACE PREP.	SEE P201 OPEN HOLES 1 1/16"ø (U.N.O.)
PAINT	SEE P201

APPROVAL	DRAWN AM 06/07/19	SHEET NO.	PLANT	ORDER NO.
SHOP	CHECKED DP 07/10/19	X203	3	317023A-20

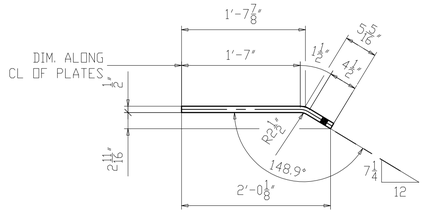

BENT DETAIL x204b

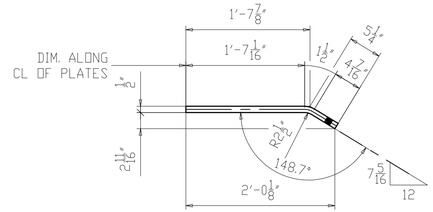

BENT DETAIL x204c

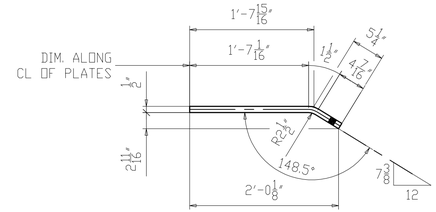

BENT DETAIL x204d

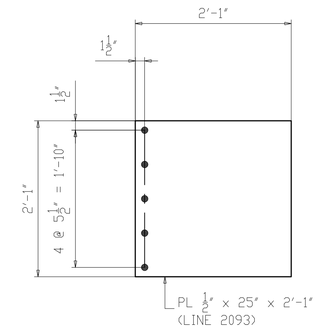

6 ~ BOTTOM GUSSET ~ x204a

(REAR & FORWARD ABUTMENT)

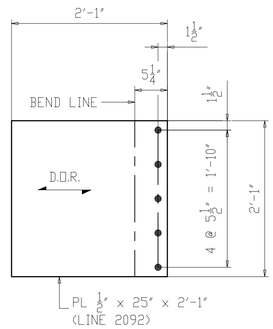

ONE ~ BOTTOM GUSSET ~ x204b

(REAR ABUTMENT)

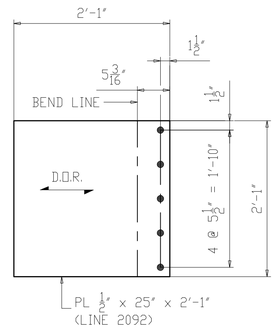

ONE ~ BOTTOM GUSSET ~ x204c

(REAR ABUTMENT)

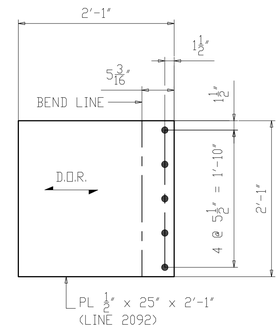

ONE ~ BOTTOM GUSSET ~ x204d

(REAR ABUTMENT)

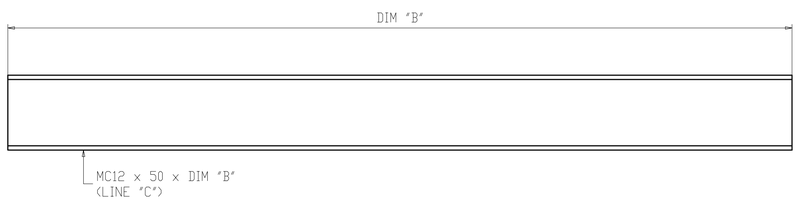

QTY "D" ~ BOTTOM STRUT ~ MARK "A"

(REAR & FORWARD ABUTMENT)

MARK "A"	DIM "B"	LINE "C"	QTY "D"
x204f	10'-0 3/4"	2088	1
x204g	10'-0 15/16"	2088	1
x204k	10'-1 3/16"	2088	1
x204m	12'-1 1/4"	2089	1
x204n	12'-1 7/8"	2089	1
x204p	12'-2 5/8"	2089	1

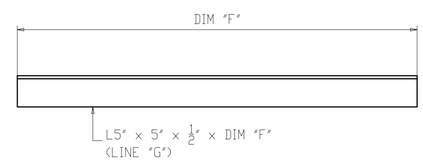

QTY "H" ~ DIAGONAL ~ MARK "E"

(REAR & FORWARD ABUTMENT)

MARK "E"	DIM "F"	LINE "G"	QTY "H"
x204t	5'-4 3/4"	2090	1
x204v	5'-5 9/16"	2090	1
x204w	5'-4 9/16"	2090	1
x204y	5'-5 15/16"	2090	1
x204aa	5'-4 5/8"	2090	1
x204ab	5'-6"	2090	1
x204ac	6'-0 9/16"	2091	2
x204ad	6'-0 1/2"	2091	1
x204af	6'-0 15/16"	2091	1
x204ag	6'-0 13/16"	2091	1
x204ak	6'-1 1/16"	2091	1

NOTES:
1. FOR GENERAL NOTES SEE SHEET GN201.
2. ALL MATERIAL A709-50WT2 (UN).
3. T2 - DENOTES MATERIAL SUBJECT TO CHARPY V-NOTCH TESTING.
4. D.O.R. DENOTES DIRECTION OF MILL ROLLING.

NO.	DATE	REMARKS	BY

REVISIONS

Veritas STEEL
2-EAU CLAIRE, WI 3-WAUSAU, WI 4-PALATKA, FL
TENCA 1605

STRUCTURE	CUY-010-1976L, OH-10 WESTBOUND OVER GCRTA BLUE AND GREEN LINES
LOCATION	CLEVELAND, OHIO CUYAHOGA COUNTY
PROJECT NO.	17-3000
ENGINEER	MICHAEL BAKER INTERNATIONAL
CONTRACTOR	KOKOSING
ITEM	ABUTMENT K-FRAME DETAILS
SURFACE PREP.	SEE P201 OPEN HOLES 1 1/16"Ø (U.N.O.)
PAINT	SEE P201

APPROVAL	DRAWN AM 06/10/19	SHEET NO.	PLANT	ORDER NO.
SHOP	CHECKED DP 07/10/19	X204	3	317023A-37

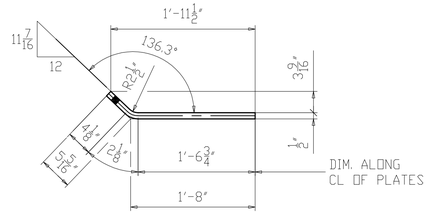

BENT DETAIL x205a

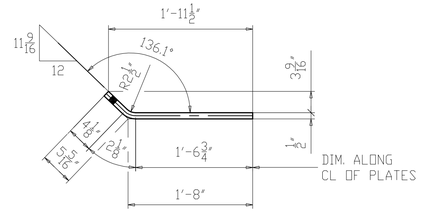

BENT DETAIL x205b

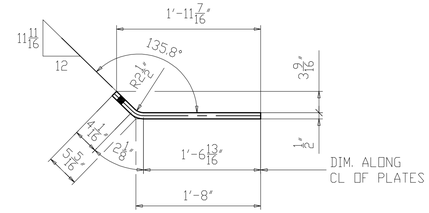

BENT DETAIL x205c

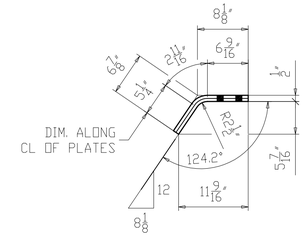

BENT DETAIL x205f

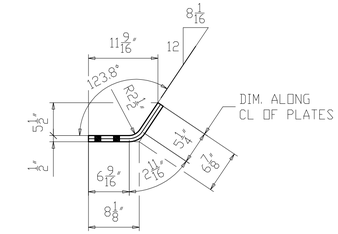

BENT DETAIL x205g

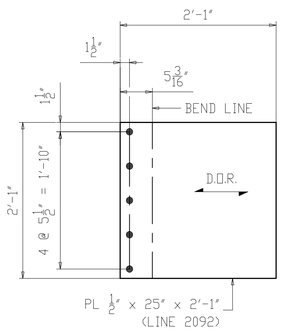

ONE ~ BOTTOM GUSSET ~ x205a
(FORWARD ABUTMENT)

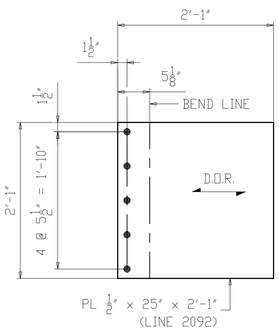

ONE ~ BOTTOM GUSSET ~ x205b
(FORWARD ABUTMENT)

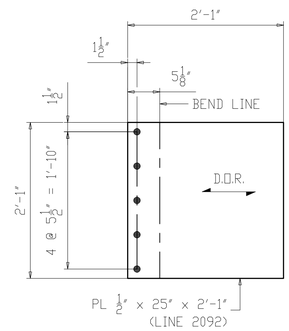

ONE ~ BOTTOM GUSSET ~ x205c
(FORWARD ABUTMENT)

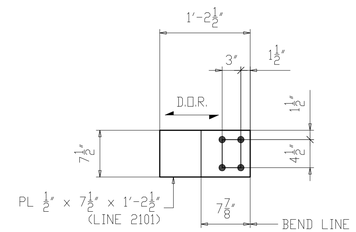

ONE ~ TOP GUSSET ~ x205f
(PIER 1)

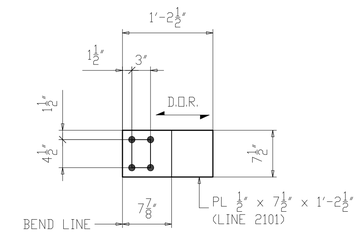

2 ~ TOP GUSSET ~ x205g
(PIER 1)

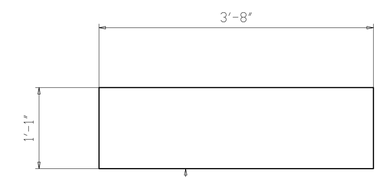

6 ~ CENTER GUSSET ~ x205d
(PIER 1 & 2)

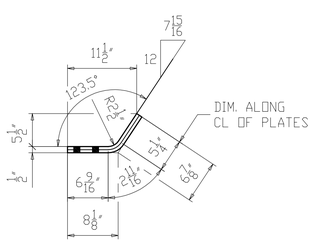

BENT DETAIL x205k

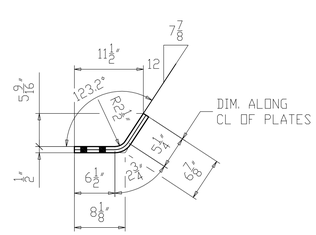

BENT DETAIL x205m

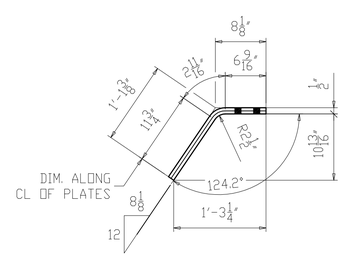

BENT DETAIL x205n

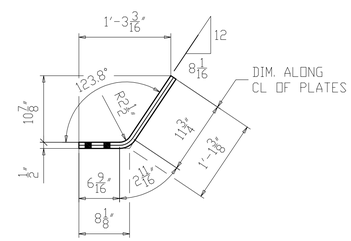

BENT DETAIL x205p

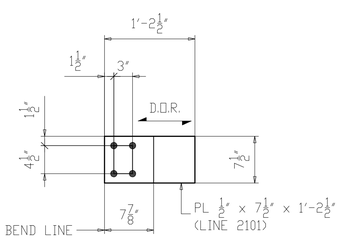

2 ~ TOP GUSSET ~ x205k
(PIER 1)

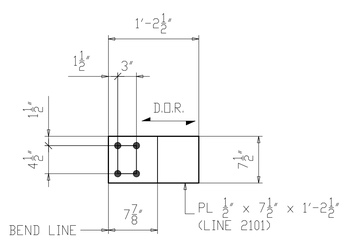

ONE ~ TOP GUSSET ~ x205m
(PIER 1)

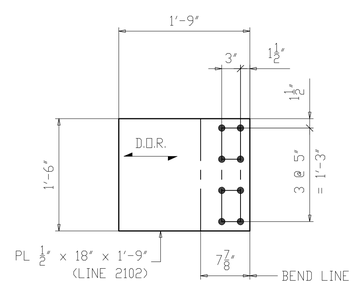

ONE ~ BOTTOM GUSSET ~ x205n
(PIER 1)

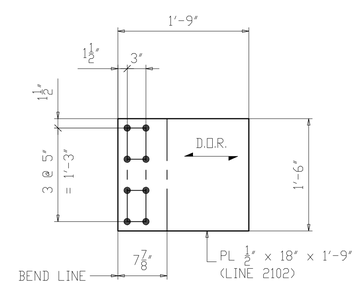

2 ~ BOTTOM GUSSET ~ x205p
(PIER 1)

NOTES:
1. FOR GENERAL NOTES SEE SHEET GN201.
2. ALL MATERIAL A709-50WT2 (UN).
3. T2 - DENOTES MATERIAL SUBJECT TO CHARPY V-NOTCH TESTING.
4. D.O.R. DENOTES DIRECTION OF MILL ROLLING.

NO.	DATE	REMARKS	BY

REVISIONS

Veritas STEEL
2-EAU CLAIRE, WI 3-WAUSAU, WI 4-PALATKA, FL
IAS NDT TENCA 1605

STRUCTURE	CUY-010-1976L, OH-10 WESTBOUND OVER GCRTA BLUE AND GREEN LINES
LOCATION	CLEVELAND, OHIO CUYAHOGA COUNTY
PROJECT NO.	17-3000
ENGINEER	MICHAEL BAKER INTERNATIONAL
CONTRACTOR	KOKOSING
ITEM	ABUTMENT & PIER K-FRAME DETAILS
SURFACE PREP.	SEE P201 OPEN HOLES $1\frac{1}{16}$"Ø (U.N.O.)
PAINT	SEE P201

APPROVAL	DRAWN AM 06/10/19	SHEET NO.	PLANT	ORDER NO.
SHOP	CHECKED DP 07/10/19	X205	3	317023A-37

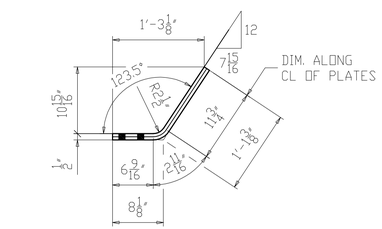

BENT DETAIL x206a

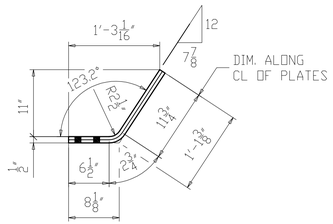

BENT DETAIL x206b

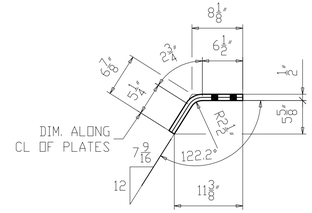

BENT DETAIL x206c

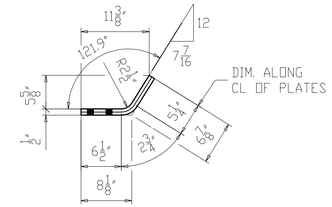

BENT DETAIL x206d

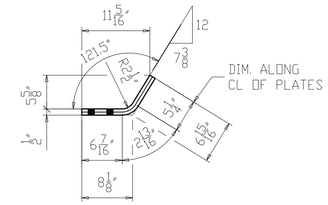

BENT DETAIL x206f

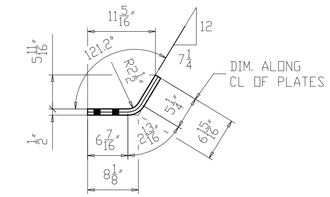

BENT DETAIL x206g

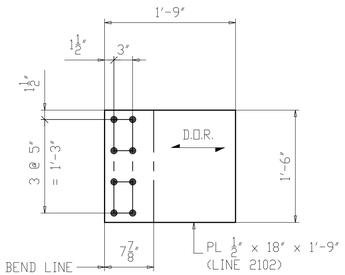

2 ~ BOTTOM GUSSET ~ x206a
(PIER 1)

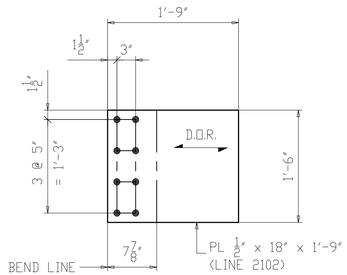

ONE ~ BOTTOM GUSSET ~ x206b
(PIER 1)

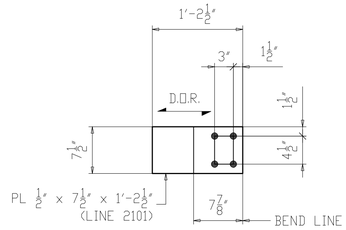

ONE ~ TOP GUSSET ~ x206c
(PIER 2)

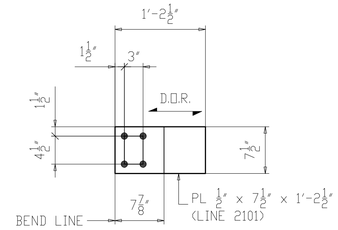

2 ~ TOP GUSSET ~ x206d
(PIER 2)

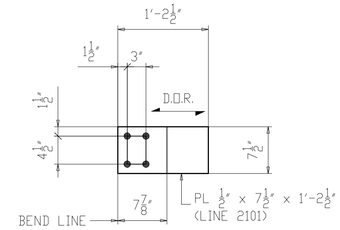

2 ~ TOP GUSSET ~ x206f
(PIER 2)

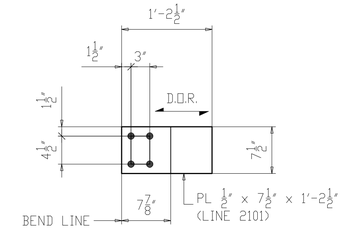

ONE ~ TOP GUSSET ~ x206g
(PIER 2)

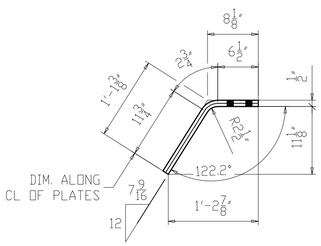

BENT DETAIL x206k

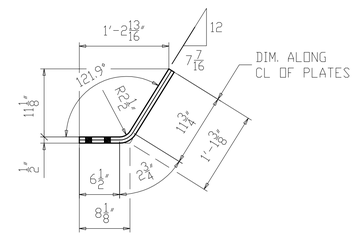

BENT DETAIL x206m

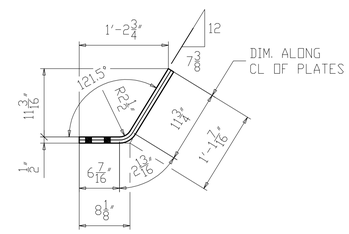

BENT DETAIL x206n

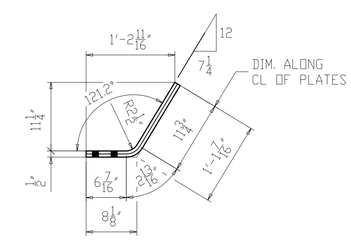

BENT DETAIL x206p

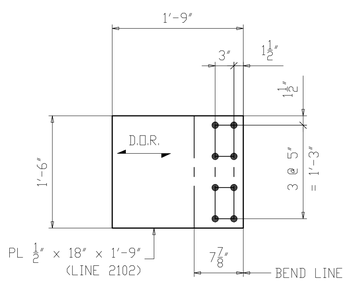

ONE ~ BOTTOM GUSSET ~ x206k
(PIER 2)

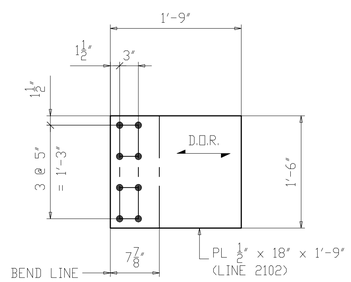

2 ~ BOTTOM GUSSET ~ x206m
(PIER 2)

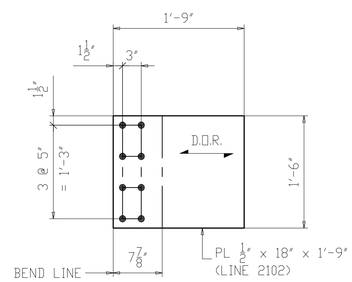

2 ~ BOTTOM GUSSET ~ x206n
(PIER 2)

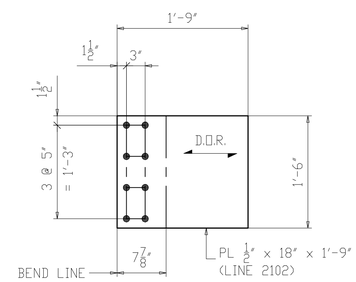

ONE ~ BOTTOM GUSSET ~ x206p
(PIER 2)

NOTES:
1. FOR GENERAL NOTES SEE SHEET GN201.
2. ALL MATERIAL A709-50WT2 (UN).
3. T2 - DENOTES MATERIAL SUBJECT TO CHARPY V-NOTCH TESTING.
4. D.O.R. DENOTES DIRECTION OF MILL ROLLING.

NO.	DATE	REMARKS	BY

REVISIONS

Veritas STEEL
2-EAU CLAIRE, WI 3-WAUSAU, WI 4-PALATKA, FL
TENCA 1605

STRUCTURE	CUY-010-1976L, OH-10 WESTBOUND OVER GCRTA BLUE AND GREEN LINES
LOCATION	CLEVELAND, OHIO CUYAHOGA COUNTY
PROJECT NO.	17-3000
ENGINEER	MICHAEL BAKER INTERNATIONAL
CONTRACTOR	KOKOSING
ITEM	PIER K-FRAME DETAILS
SURFACE PREP.	SEE P201 OPEN HOLES 1 1/16"Ø (U.N.O.)
PAINT	SEE P201

APPROVAL	DRAWN AM 06/10/19	SHEET NO.	PLANT	ORDER NO.
SHOP	CHECKED DP 07/10/19	X206	3	317023A-37

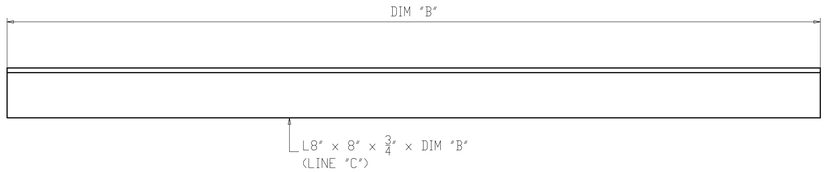

QTY "D" ~ BOTTOM STRUT ~ MARK "A"

(PIER 1 & 2)

MARK "A"	DIM "B"	LINE "C"	QTY "D"
x207a	15'-0 1/4"	2096	1
x207b	15'-1 11/16"	2096	1
x207c	15'-3 1/4"	2096	1
x207d	15'-10 1/8"	2095	1
x207f	15'-11 15/16"	2095	1
x207g	16'-1 13/16"	2095	1

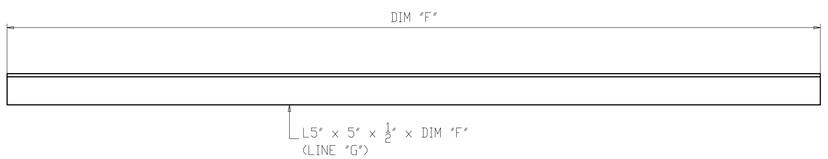

QTY "H" ~ TOP STRUT ~ MARK "E"

(PIER 1 & 2)

MARK "E"	DIM "F"	LINE "G"	QTY "H"
x207k	15'-0 1/4"	2097	1
x207m	15'-1 3/4"	2097	1
x207n	15'-3 5/16"	2097	1
x207p	15'-10 3/16"	2098	1
x207t	16'-0"	2098	1
x207v	16'-1 7/8"	2098	1

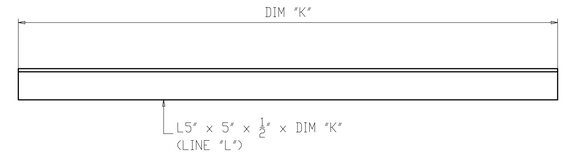

QTY "M" ~ DIAGONAL ~ MARK "J"

(PIER 1 & 2)

MARK "J"	DIM "K"	LINE "L"	QTY "M"
x207w	6'-8 1/16"	2100	1
x207y	6'-7 1/8"	2100	1
x207aa	6'-8 3/4"	2100	1
x207ab	6'-7 7/16"	2100	1
x207ac	6'-9 1/4"	2100	1
x207ad	6'-7 7/8"	2100	1
x207af	6'-11 3/16"	2099	1
x207ag	6'-10 5/16"	2099	1
x207ak	6'-11 15/16"	2099	1
x207am	6'-10 13/16"	2099	1
x207an	7'-0 1/2"	2099	1
x207ap	6'-11 7/16"	2099	1

NOTES:
1. FOR GENERAL NOTES SEE SHEET GN201.
2. ALL MATERIAL A709-50WT2 (UN).
3. T2 - DENOTES MATERIAL SUBJECT TO CHARPY V-NOTCH TESTING.

NO.	DATE	REMARKS	BY
△			

REVISIONS

Veritas STEEL
2-EAU CLAIRE, WI 3-WAUSAU, WI 4-PALATKA, FL
TENCA 1605

STRUCTURE: CUY-010-1976L, OH-10 WESTBOUND OVER GCRTA BLUE AND GREEN LINES
LOCATION: CLEVELAND, OHIO CUYAHOGA COUNTY
PROJECT NO.: 17-3000
ENGINEER: MICHAEL BAKER INTERNATIONAL
CONTRACTOR: KOKOSING

ITEM: PIER K-FRAME DETAILS
SURFACE PREP.: SEE P201 OPEN HOLES: 1 1/16"Ø (U.N.O.)
PAINT: SEE P201

APPROVAL	DRAWN AM 06/10/19	SHEET NO.	PLANT	ORDER NO.
SHOP	CHECKED DP 07/10/19	X207	3	317023A-37

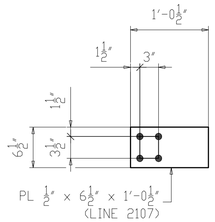

124 ~ TOP GUSSET ~ x208a
(INTERMEDIATE K-FRAME)

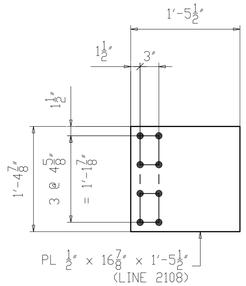

124 ~ BOTTOM GUSSET ~ x208b
(INTERMEDIATE K-FRAME)

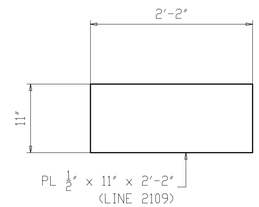

62 ~ CENTER GUSSET ~ x208c
(INTERMEDIATE K-FRAME)

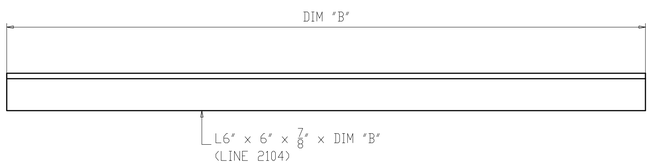

QTY "C" ~ BOTTOM STRUT ~ MARK "A"
(INTERMEDIATE K-FRAME)

MARK "A"	DIM "B"	QTY "C"
x208d	8'-11 1/4"	26
x208f	8'-11 5/16"	28
x208g	8'-11 3/8"	8

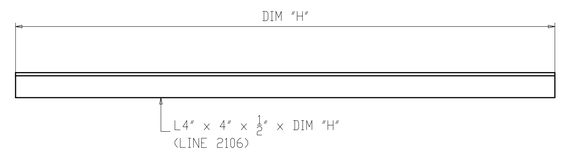

QTY "J" ~ DIAGONAL ~ MARK "G"
(INTERMEDIATE K-FRAME)

MARK "G"	DIM "H"	QTY "J"
x208n	4'-7"	6
x208p	4'-7 1/16"	4
x208t	4'-7 1/8"	6
x208v	4'-7 3/16"	10
x208w	4'-7 1/4"	6
x208y	4'-7 5/16"	2
x208aa	4'-7 3/8"	8
x208ab	4'-7 7/16"	8
x208ac	4'-7 9/16"	6
x208ad	4'-7 5/8"	4
x208af	4'-7 11/16"	4
x208ag	4'-7 3/4"	4
x208ak	4'-7 13/16"	2
x208am	4'-7 7/8"	4
x208an	4'-7 15/16"	8
x208ap	4'-8"	8
x208at	4'-8 1/16"	2
x208av	4'-8 1/8"	6
x208aw	4'-8 3/16"	10
x208ay	4'-8 1/4"	6
x208ba	4'-8 5/16"	4
x208bb	4'-8 3/8"	6

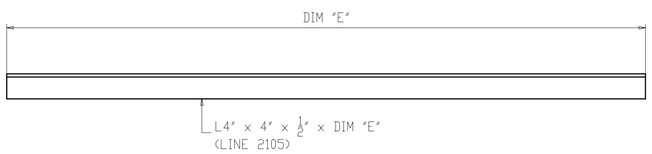

QTY "F" ~ TOP STRUT ~ MARK "D"
(INTERMEDIATE K-FRAME)

MARK "D"	DIM "E"	QTY "F"
x208k	8'-11 5/16"	50
x208m	8'-11 3/8"	12

NOTES:
1. FOR GENERAL NOTES SEE SHEET GN201.
2. ALL MATERIAL A709-50WT2 (UN).
3. T2 - DENOTES MATERIAL SUBJECT TO CHARPY V-NOTCH TESTING.

NO.	DATE	REMARKS	BY

REVISIONS

Veritas STEEL
2-EAU CLAIRE, WI 3-WAUSAU, WI 4-PALATKA, FL
TENCA 1605

STRUCTURE: CUY-010-1976L, OH-10 WESTBOUND OVER GCRTA BLUE AND GREEN LINES
LOCATION: CLEVELAND, OHIO CUYAHOGA COUNTY
PROJECT NO.: 17-3000
ENGINEER: MICHAEL BAKER INTERNATIONAL
CONTRACTOR: KOKOSING

ITEM: INTERMEDIATE K-FRAME DETAILS
SURFACE PREP.: SEE P201 OPEN HOLES: 1 1/16"Ø (U.N.O.)
PAINT: SEE P201

APPROVAL	DRAWN AM 06/10/19	SHEET NO.	PLANT	ORDER NO.
SHOP	CHECKED SA 07/10/19	X208	3	317023A-37

LBFoster
Fabricated Bridge Products

Contractor: Kokosing
Project: Bridges ov GCRTA Blue & Green
Structure: BU-19 OH-10
Location: Cuyahoga Co., OH
LBF Project No: 275063

6/1/2020

Sara Hansel
415 Holiday Drive
Pittsburgh, PA 15220
412-770-5496

Choose a section	3 x 8 x 20	
State	OH	
Support Spacing	10.5	Feet
Beam Flange Width	20	inches
Angle Deduct	2	inches
Concrete Weight per CF	150	
Slab Depth	9	inches

Number of deck valleys	3	
Number of Deck Valleys with Foam	0	
Effective Slab Depth incl conc in flutes	9.86	in
Construction DL	50	lb / sf
Weight of Form	2.74	lb / sf
Weight of Form incl Concrete/Foam in Flutes	13.49	lb / sf
State allowable weight of Forms	15	lb / sf
Added dead load due to form deflection	0.00	lb / sf
Dead Load - Deflection 120 MIN	125.99	lb / sf
Design Load - Stress	175.99	lb / sf

Design Span Length	104.000	Inches	or	8.667	ft
SIP Sheet Length	104.500	Inches	or	8' 8 -1/2"	<--Maximum
Moment of Inertia	1.113	In^4 per foot			
Allowable Stress	36,000	psi	F_y=	80,000	psi
Section Modulas	0.608	In^3 per foot			

Note: Design Load= Wt Concrete +Construction DL+Wtform(include concrete in flutes)+ DL from initial deflection.

Stress:

Resisting Moment, Mr = f x Sp = **21,888** in-lb

Design Moment M, = W x L ^2 x 12 / 8 = **19,828** in-lb

19828 in-lb (actual) < **21888 in-lb** (allowable) ***OK***

Deflection

Dead Load

Allowable Deflection L/	180	Equals	0.50	Inches not to exceed	0.500	Inches
Calculated Deflection is L/	213	Equals	0.49	Inches		

0.49 " (actual) < **0.50 "** (allowable) ***OK***

Support Reaction:

R = P x L / 2 = **762.62** lb/ft
M = P x a = 762.62 in-lb actual
a = 1 in

Support Angle:

Standard Bay

thickness = 10 gauge = 0.13 in
Fa = 29000 psi F_y= 40,000 psi
S= b x t^2 / 6(b = 12 in(per foot width)) = 2 x t ^ 2 = 0.03618 in^3 / ft
M = S x Fa = **1049.23** in-lb / ft

762.6 in-lb (actual) < **1049 in-lb** (allowable) ***OK***

STATE OF OHIO
MICHAEL P. REINA
E-79289
REGISTERED PROFESSIONAL ENGINEER
1/27/21

Weld Calculation:

WELD SIZE 0.125 in
LENGTH 2.0 in (use 1.5" Min)
SPACING 12 in - Standard use either 12" or 15"
Pn = 0.75 x Tw x L x Fxx = **7,953.75** lb =ultimate

AISI S100 2016

Tw = 0.088375
L= 2
Fxx = 60

Pa= Pn/Safety Factor
= 7953.75 / 2.55

Allowable Weld Strength = **3,119.12** lb

Distibuted Load: = R x Support Spacing / 12 in = **762.62** lb

762.6 lb (actual) < **3119.1 lb** (allowable) **OK**

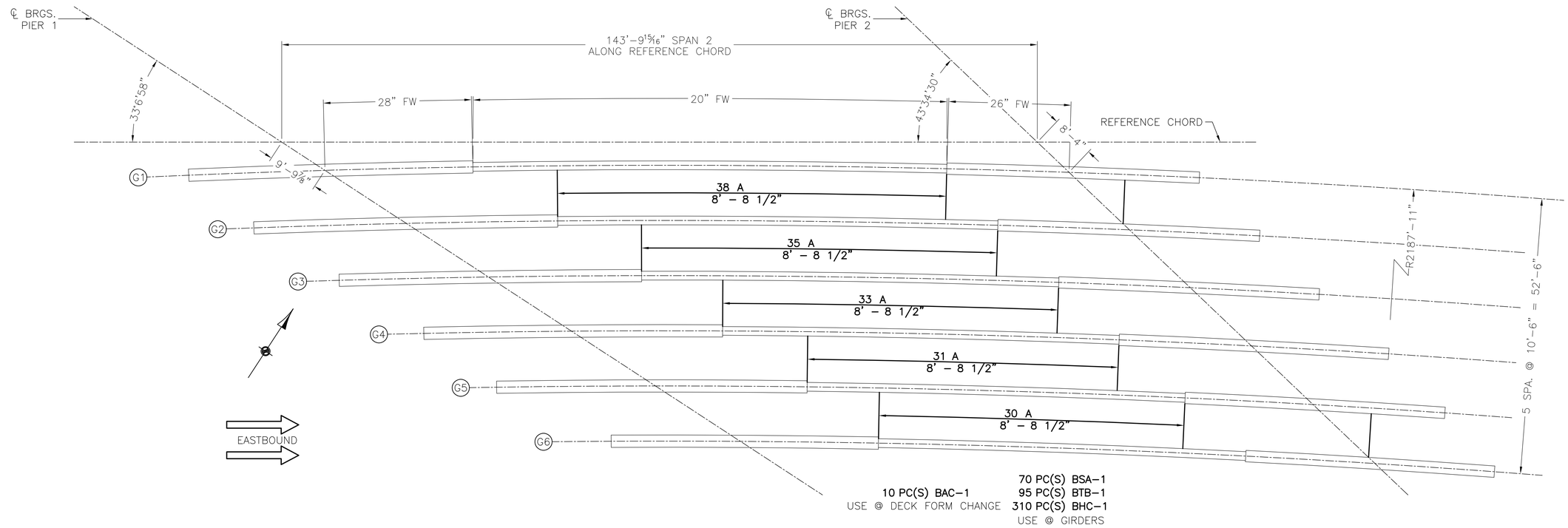

EB BRIDGE DECK PLAN

SCALE : 3/32" = 1'-0"

3X8 20GA. G235 TYPE A

EACH SHEET MUST BE FASTENED TO SUPPORTS IMMEDIATELY UPON PLACEMENT TO AVOID HAZARD THAT COULD RESULT FROM HORIZONTAL MOVEMENT OR SUDDEN UPLIFT

STATE OF OHIO
MICHAEL P. REINA
E-79289
REGISTERED PROFESSIONAL ENGINEER
11/27/21

REV.	DESCRIPTION	BY	DATE	CHK'D
2	REVISED PER EMAIL DATED 1-7-21	JPF	01/11/21	WVD
1	REVISED PER EMAIL DATED 8-11-20	JPF	08/17/20	WVD

LBFoster Fabricated Bridge Products

L.B. FOSTER COMPANY
415 HOLIDAY DRIVE
PITTSBURGH, PA 15220

FOR: KOKOSING
CUYAHOGA COUNTY OH
CUY-IR490 / SR010- 2.09 / 19.28
BU-19 OH-10 BRIDGES OVER GCRTA BLUE AND GREEN LINES
AND GCRTA CATENARY MODIFICATIONS

EAST BOUND DECK PLAN

MADE JPF DATE 05/19/20 JOB NO. 275063
CHECK WVD DATE 05/22/20 DRAWING B1
REV. NO.

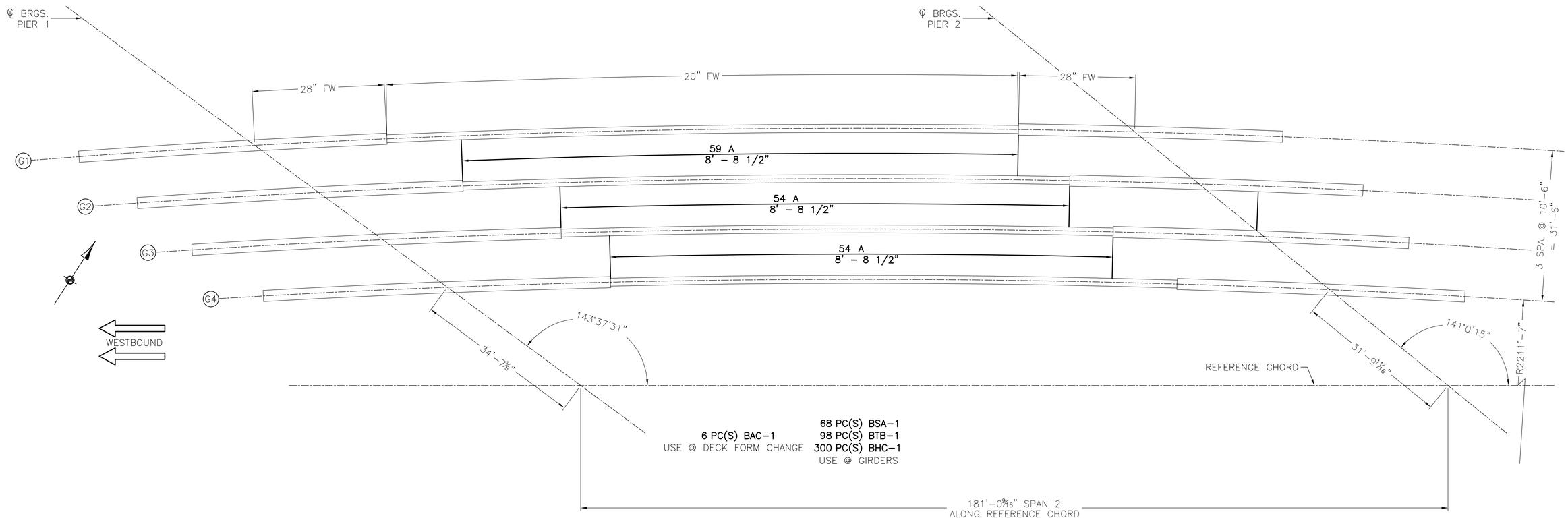

WB BRIDGE DECK PLAN

SCALE : 3/32" = 1'–0"

3X8 20GA. G235 TYPE A

EACH SHEET MUST BE FASTENED TO SUPPORTS IMMEDIATELY UPON PLACEMENT TO AVOID HAZARD THAT COULD RESULT FROM HORIZONTAL MOVEMENT OR SUDDEN UPLIFT

STATE OF OHIO
MICHAEL P. REINA
E-79289
REGISTERED PROFESSIONAL ENGINEER
1/27/21

REV.	DESCRIPTION	BY	DATE	CHK'D
2	REVISED PER EMAIL DATED 1–7–21	JPF	01/11/21	WVD
1	REVISED PER EMAIL DATED 8–11–20	JPF	08/17/20	WVD

LBFoster Fabricated Bridge Products

L.B. FOSTER COMPANY
415 HOLIDAY DRIVE
PITTSBURGH, PA 15220

FOR: KOKOSING
CUYAHOGA COUNTY OH
CUY–IR490 / SR010– 2.09 / 19.28
BU–19 OH–10 BRIDGES OVER GCRTA BLUE AND GREEN LINES
AND GCRTA CATENARY MODIFICATIONS

WEST BOUND DECK PLAN

MADE JPF DATE 05/19/20 JOB NO. 275063
CHECK WVD DATE 05/22/20 DRAWING B2
REV. NO.

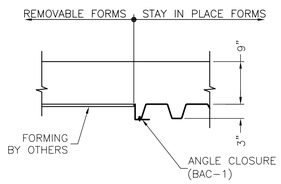

SECTION @ DECK FORM CHANGE (BACK STATION)

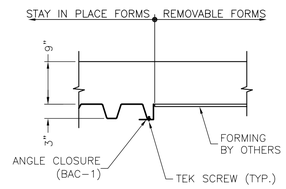

SECTION @ DECK FORM CHANGE (FORWARD STATION)

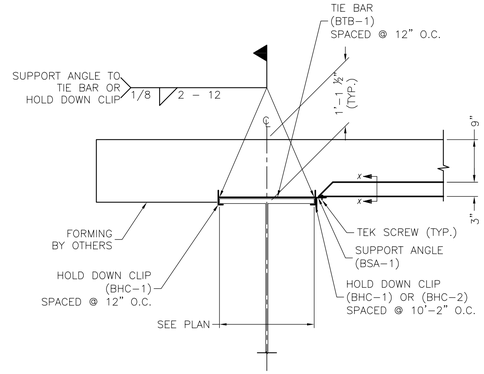

SECTION @ EXTERIOR GIRDERS

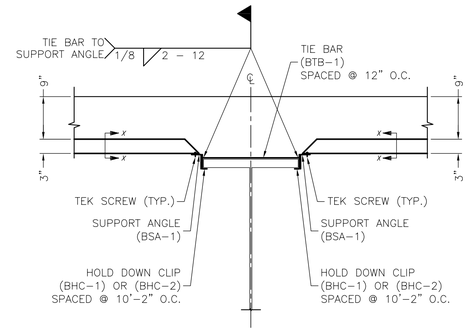

SECTION @ INTERIOR GIRDERS

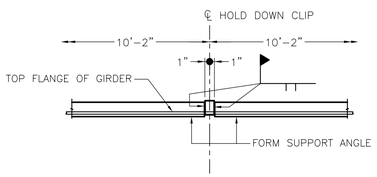

X–X

GENERAL NOTES

MATERIAL NOTES:

1. BRIDGE DECK FORMS SHALL BE FABRICATED FROM STRUCTURAL QUALITY STEEL CONFORMING TO THE LATEST REVISIONS OF THE ASTM SPEC. A–653/A653M, GRADE 40 FOR 14 GA. – 16 GA. OR GRADE 80 FOR 17 GA. – 22 GA. ACCESSORIES TO BE GRADE 40.
2. GALVANIZED COATING CONFORMS TO LATEST REVISION OF ASTM A–924/A–924M (FORMERLY A–525), COATING G235.
3. SELF DRILLING FASTENERS WILL BE CADMIUM PLATED PER ASTM B766 WITH MINIMUM THICKNESS OF 0.00005 INCH. THE HEADS OF THE FASTENERS WILL BE PAINTED A HIGHLY VISIBLE COLOR TO AID INSPECTION.

ERECTION NOTES:

CRITICAL SAFETY CONCERN:

1. EACH SHEET MUST BE FASTENED TO SUPPORTS IMMEDIATELY UPON PLACEMENT TO AVOID HAZARD THAT COULD RESULT FROM HORIZONTAL MOVEMENT OR SUDDEN UPLIFT.
2. BRIDGE DECK FORM AND ACCESSORY MATERIALS NOT PROMPTLY ERECTED SHALL BE STORED OFF THE GROUND WITH ONE END ELEVATED FOR DRAINAGE.
3. GENERAL CONTRACTOR SHALL TAKE GRADES ON BEAMS AT MINIMUM OF 10'–0" INTERVALS SO THAT DECK ERECTOR CAN ADJUST ELEVATION OF SUPPORTS TO FOLLOW FINISHED ROADWAY PROFILES. (±1/8")
4. PRIOR TO PLACEMENT OF FORMS, THE ENGINEER OR CONTRACTOR SHALL ADVISE ERECTOR OF DIRECTION OF POUR. THE PREFERRED PLACEMENT OF FORMS IS IN OPPOSITE DIRECTION OF POUR TO MINIMIZE DIFFERENTIAL DEFLECTION.
5. UNLESS OTHERWISE NOTED, ALL SUPPORT ANGLES ARE TO BE WELDED USING A 1/8" X 2" FILLET WELD SPACED AT 12" ON CENTER WITH WELDS AT EACH END OF EACH SUPPORT.
6. SHEETS SHALL BEAR A MINIMUM OF 1" ON ALL SUPPORTS. DISTANCE FROM END OF SHEET TO BEAM FLANGE SHALL NOT EXCEED 1".
7. ALL CUTTING OR DRILLING OF STAY IN PLACE FORM SHEETS AND ACCESSORY ITEMS IS PROHIBITED, EXCEPT AS NEEDED FOR INSTALLATION, USING SCREWS. NOT BY LB FOSTER. CUTTING BY BURNING IS NOT PERMITTED.

MISCELLANEOUS NOTES:

1. THE CONTRACTOR SHALL VERIFY ALL DIMENSIONS.
2. THE CONTRACTOR TO SHORE END DAMS TO SUPPORT WEIGHT OF WET CONCRETE.
3. CARE SHALL BE TAKEN TO AVOID DAMAGING THE INSTALLED FORM FROM EITHER STACKING OF MATERIALS, DROPPING EQUIPMENT OR HEAVY CONSTRUCTION TRAFFIC.
4. CONCRETE SHALL NOT BE DUMPED ON FORMS TO A DEPTH GREATER THAN 10" ABOVE TOP OF FORM.
5. ANY ADDITIONAL CONCRETE REQUIRED DUE TO USE OF FORMS SHALL BE AT THE CONTRACTORS EXPENSE.
6. USE 3/8" HWH 1/4"–14 X 1" SELF DRILLING CADMIUM SCREWS TO BE PLACED AS FOLLOWS
   –ALONG SUPPORTS: AT MID–WIDTH & AT SIDELAPS
   –ALONG SIDELAP: SPACED AT 18" O.C. MAX.
7. CALCIUM CHLORIDE (OR ANY ADMIXTURE CONTAINING CHLORIDE SALTS) SHALL NOT BE USED IN THE CONCRETE PLACED ON FORMS.

EACH SHEET MUST BE FASTENED TO SUPPORTS IMMEDIATELY UPON PLACEMENT TO AVOID HAZARD THAT COULD RESULT FROM HORIZONTAL MOVEMENT OR SUDDEN UPLIFT

BRIDGE FORM ACCESSORY LIST

QTY. EB	QTY. WB	MARK	GAGE	DIMENSIONS A	B	C	ANGLE W	ANGLE X	LENGTH (INCHES)	COATING	SHAPE KEY
70	68	BSA–1	10	2	3		90		120	G235	
95	98	BTB–1	10	2					120	G235	
310	300	BHC–1	10	1	3		90		2	G235	
10	6	BAC–1	14	3	4		90		120	G235	
1700	1700		3/8" HWH 1/4" – 14 X 1" SELF DRILLING CADMIUM SCREWS								

GALVANIZED G–235 COATING.
ALL ACCESSORIES TO BE 10'–0" LONG (UNO)

ACCESSORY QUANTITY BASED ON LINEAR FOOTAGE REQUIRED. ALL CUT–OFFS MUST BE UTILIZED.

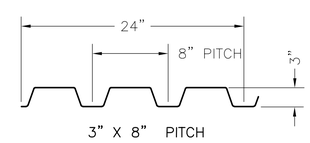

3" X 8" PITCH

SECTIONAL PROPERTIES

PROFILE	GAGE	DESIGN THICKNESS	I In.⁴/Ft.	S In.³/Ft.	MARK
3" X 8"	20	0.0359	1.113	0.608	A

STATE OF OHIO
MICHAEL P. REINA
E-79289
REGISTERED PROFESSIONAL ENGINEER
1/27/21

LBFoster Fabricated Bridge Products

L.B. FOSTER COMPANY
415 HOLIDAY DRIVE
PITTSBURGH, PA 15220

FOR: KOKOSING
CUYAHOGA COUNTY OH
CUY–IR490 / SR010– 2.09 / 19.28
BU–19 OH–10 BRIDGES OVER GCRTA BLUE AND GREEN LINES AND GCRTA CATENARY MODIFICATIONS

REV.	DESCRIPTION	BY	DATE	CHK'D
2	REVISED PER EMAIL DATED 1–7–21	JPF	01/11/21	WVD
1	REVISED PER EMAIL DATED 8–11–20	JPF	08/17/20	WVD

EB, WB SECTIONS AND GENERAL NOTES

MADE JPF DATE 05/19/20 JOB NO. 275063
CHECK WVD DATE 05/22/20 DRAWING B3
REV. NO.

Bevel Table	
A	C
1-5/16"	1-11/16"

Checked By	Neil Spears
Drawn By	Brodie Spears

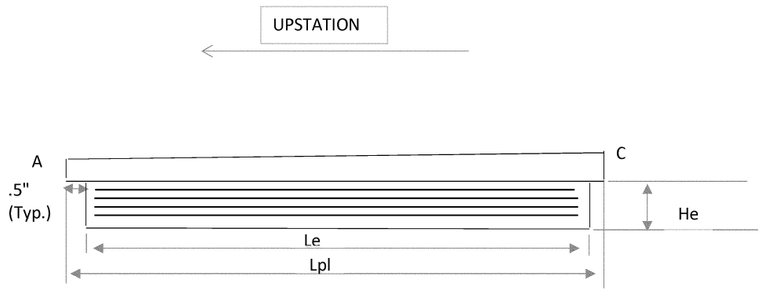

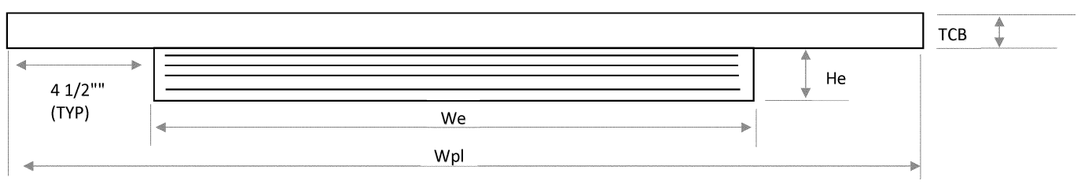

The elastomer shall have a hardness of 50 Durometer. The bearings were designed in accordance with section 14.7.6 (method A) of the AASHTO LRFD bridge design specifications. The long-term compression proof load test (AASHTO standard specifications for highway bridges, Division II, section 18.7.2.6) is not required.

The steel load plate shall be ASTM A709 grade 50 steel and shall be coated in accordance with items 513 and 514. (Dimecote 9 liquid and Dimecote 9 Series Powder)

The steel load plate shall be bonded by vulcanization to the elastomer during the molding process.

Each bearing assembly shall be shop marked with the following information: top, forward station direction, location (rear abutments, Pier 1, Pier 2, or forward Abutments) and beam number. All bearings shall be marked prior to shipping. the marks shall include the bearing location on the bridge, and a direction arrow that points up-station. all marks shall be permanent and be visible after the bearing is installed.

Anchor rods shall be ASTM F1554, Grade 105. Nuts shall conform to ASTM A563 for appropriate grade and size of anchor bolt. Washers shall confom to ASTM F436.

P =Number of Steel Laminates per Bearing
t= steel laminate thickness = .0747"
te = external elastomer layer thickness (1 ea.)
ti = internal elastomer layer thickness (5 ea.)

BEARING LOCATION	NO. REQ'D	Le	We	He	te	ti	P	Lpl	Wpl	TCB					
Forward AB	6	16"	17"	3.87	3/8"	5/8"	5	17"	26"	1-1/2"					

BRIDGE COMPONENTS INDUSTRIES, LLC

CONTRACTOR:	Kokosing
COUNTY:	Cuyahoga
Bridge #:	CUY-010-1978R
PROJECT:	ODOT 3000-17
Date:	2/19/2020
Drawing Number	Brodot 3000-17
Page	1 of 4

Bevel Table	
A	C
1-5/16"	1-11/16"

Checked By	Neil Spears
Drawn By	Brodie Spears

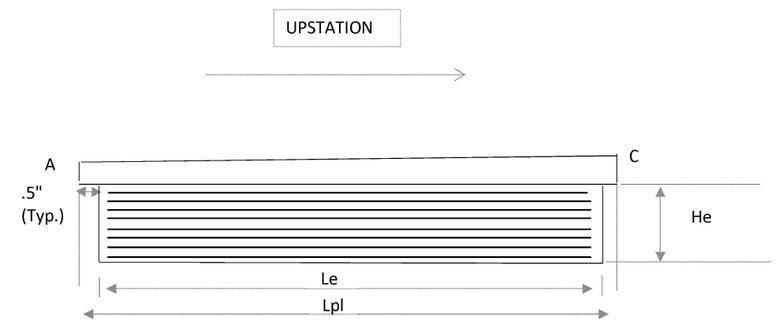

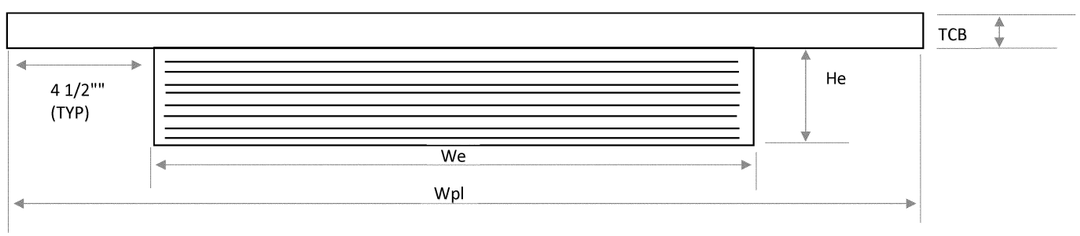

The elastomer shall have a hardness of 50 Durometer. The bearings were designed in accordance with section 14.7.6 (method A) of the AASHTO LRFD bridge design specifications. The long-term compression proof load test (AASHTO standard specifications for highway bridges, Division II, section 18.7.2.6) is not required.

The steel load plate shall be ASTM A709 grade 50 steel and shall be coated in accordance with items 513 and 514. (Dimecote 9 liquid and Dimecote 9 Series Powder)

The steel load plate shall be bonded by vulcanization to the elastomer during the molding process.

Each bearing assembly shall be shop marked with the following information: top, forward station direction, location (rear abutments, Pier 1, Pier 2, or forward Abutments) and beam number. All bearings shall be marked prior to shipping. the marks shall include the bearing location on the bridge, and a direction arrow that points up-station. all marks shall be permanent and be visible after the bearing is installed.

Anchor rods shall be ASTM F1554, Grade 105. Nuts shall conform to ASTM A563 for appropriate grade and size of anchor bolt. Washers shall confom to ASTM F436.

P =Number of Steel Laminates per Bearing
t= steel laminate thickness = .0747"
te = external elastomer layer thickness (1 ea.)
ti = internal elastomer layer thickness (8 ea.)

BEARING LOCATION	NO. REQ'D	Le	We	He	te	ti	P	Lpl	Wpl	TCB					
Rear AB	6	16"	17"	4.84"	1/4"	1/2"	8	17"	26"	1-1/2"					

BRIDGE COMPONENTS INDUSTRIES, LLC

CONTRACTOR:	Kokosing
COUNTY:	Cuyahoga
Bridge #:	CUY-010-1978R
PROJECT:	ODOT 3000-17
Date:	2/19/2020
Drawing Number	Brodot 3000-17
Page	2 of 4

Bevel Table	
A	C
1-1/4"	1-3/4"

Checked By	Neil Spears
Drawn By	Brodie Spears

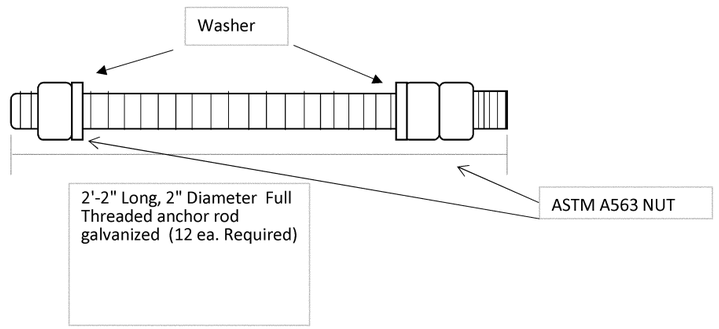

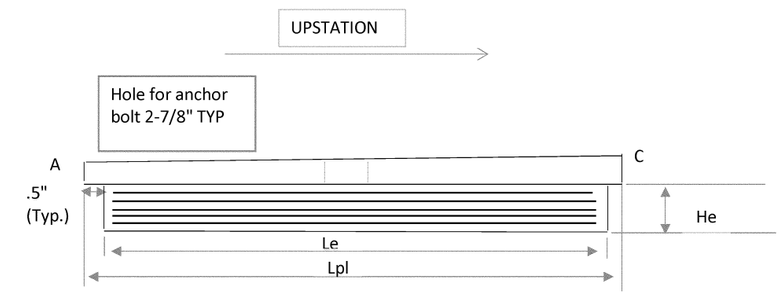

The elastomer shall have a hardness of 50 Durometer. The bearings were designed in accordance with section 14.7.6 (method A) of the AASHTO LRFD bridge design specifications. The long-term compression proof load test (AASHTO standard specifications for highway bridges, Division II, section 18.7.2.6) is not required.

The steel load plate shall be ASTM A709 grade 50 steel and shall be coated in accordance with items 513 and 514. (Dimecote 9 liquid and Dimecote 9 Series Powder)

The steel load plate shall be bonded by vulcanization to the elastomer during the molding process.

Each bearing assembly shall be shop marked with the following information: top, forward station direction, location (rear abutments, Pier 1, Pier 2, or forward Abutments) and beam number. All bearings shall be marked prior to shipping. the marks shall include the bearing location on the bridge, and a direction arrow that points up-station. all marks shall be permanent and be visible after the bearing is installed.

Anchor rods shall be ASTM F1554, Grade 105. Nuts shall conform to ASTM A563 for appropriate grade and size of anchor bolt. Washers shall confom to ASTM F436.

P =Number of Steel Laminates per Bearing
t= steel laminate thickness = .0747"
te = external elastomer layer thickness (1 ea.)
ti = internal elastomer layer thickness (5 ea.)

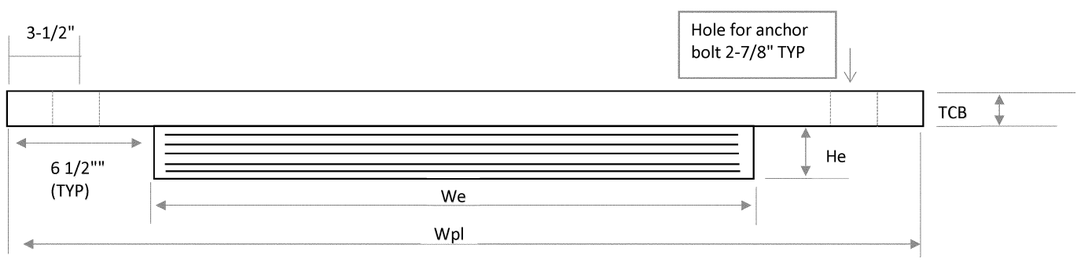

BEARING LOCATION	NO. REQ'D	Le	We	He	te	ti	P	Lpl	Wpl	TCB	BOLTS				
Pier 1	6	22"	28"	3.75"	1/4"	5/8"	5	23"	41"	1-1/2"	12				

BRIDGE COMPONENTS INDUSTRIES, LLC

CONTRACTOR:	Kokosing
COUNTY:	Cuyahoga
Bridge #:	CUY-010-1978R
PROJECT:	ODOT 3000-17
Date:	2/19/2020
Drawing Number	Brodot 3000-17
Page	3 of 4

Checked By	Neil Spears
Drawn By	Brodie Spears

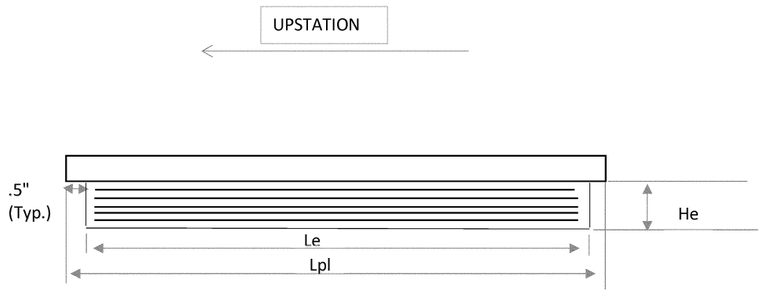

The elastomer shall have a hardness of 50 Durometer. The bearings were designed in accordance with section 14.7.6 (method A) of the AASHTO LRFD bridge design specifications. The long-term compression proof load test (AASHTO standard specifications for highway bridges, Division II, section 18.7.2.6) is not required.

The steel load plate shall be ASTM A709 grade 50 steel and shall be coated in accordance with items 513 and 514. (Dimecote 9 liquid and Dimecote 9 Series Powder)

The steel load plate shall be bonded by vulcanization to the elastomer during the molding process.

Each bearing assembly shall be shop marked with the following information: top, forward station direction, location (rear abutments, Pier 1, Pier 2, or forward Abutments) and beam number. All bearings shall be marked prior to shipping. the marks shall include the bearing location on the bridge, and a direction arrow that points up-station. all marks shall be permanent and be visible after the bearing is installed.

Anchor rods shall be ASTM F1554, Grade 105. Nuts shall conform to ASTM A563 for appropriate grade and size of anchor bolt. Washers shall confom to ASTM F436.

P =Number of Steel Laminates per Bearing
t= steel laminate thickness = .0747"
te = external elastomer layer thickness (1 ea.)
ti = internal elastomer layer thickness (5 ea.)

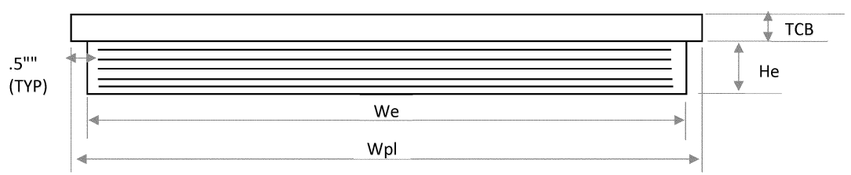

BEARING LOCATION	NO. REQ'D	Le	We	He	te	ti	P	Lpl	Wpl	TCB					
Pier 2	6	20"	27"	3.75"	1/4"	5/8"	5	21"	28"	1-1/2"					

BRIDGE COMPONENTS INDUSTRIES, LLC

CONTRACTOR:	Kokosing
COUNTY:	Cuyahoga
Bridge #:	CUY-010-1978R
PROJECT:	ODOT 3000-17
Date:	2/19/2020
Drawing Number	Brodot 3000-17
Page	4 of 4

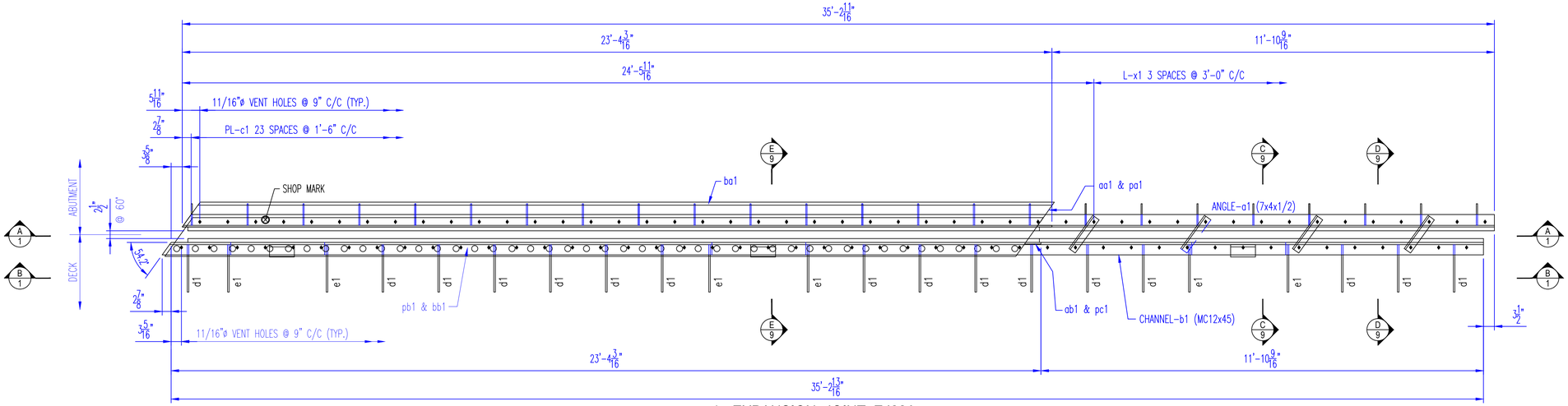

1 - EXPANSION JOINT EJ22A

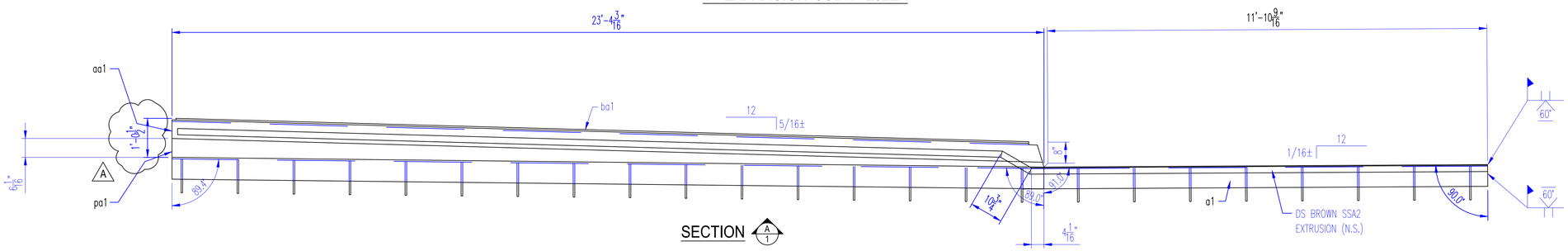

SECTION A/1

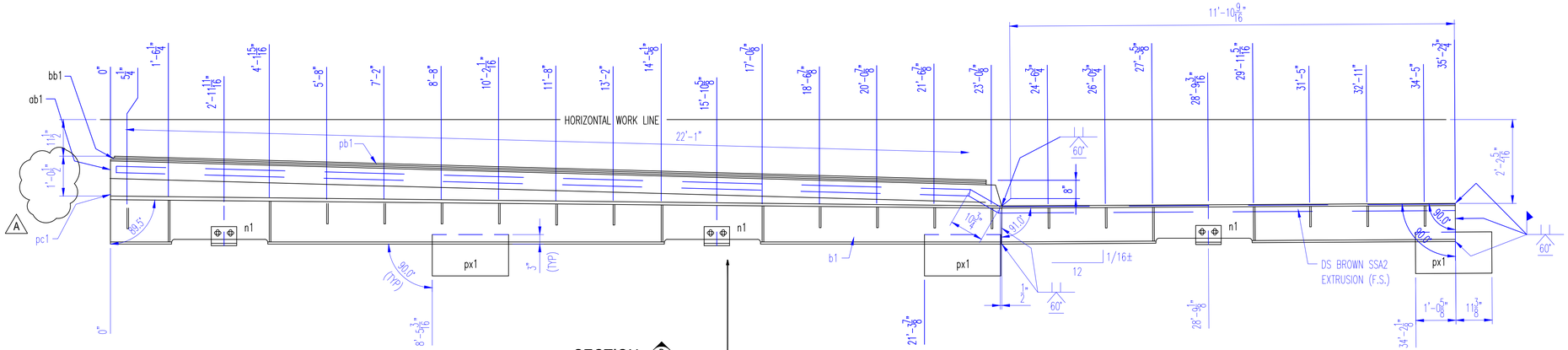

SECTION B/1

TOTAL PAY LENGTH: 156.5 FT.

TOTAL PAY LENGTH REAR ABUT: 71.5 FT.

PAY LENGTH: 35.5 FT.

NOTE:
PLATE px1 TO BE CVN

NOTES:

SEE SHEET 5 & 6 FOR SIDEWALK AND GUSSET PLATE DETAILS
SEE SHEET 9 FOR EXPANSION JOINT DETAILS
SEE SHEET 10 FOR EXPANSION JOINT DETAILS, GENERAL NOTES & BILL OF MATERIAL
SEE SHEET 11 FOR EXPANSION JOINT LOCATION PLAN

AISC CERTIFIED FABRICATOR

BRIDGE - INTERMEDIATE (MAJOR)
FRACTURE CRITICAL ENDORSEMENT
SOPHISTICATED PAINT ENDORSEMENT

REV. No.	REVISION
A	REVISED PER CONTRACTOR 2/11/20

SHOP INSPECTED BY:

APPROVAL

KOKOSING CONSTRUCTION

- [x] NO EXCEPTIONS TAKEN
- [ ] MAKE CORRECTIONS AS NOTED
- [ ] REVISE AND RESUBMIT
- [ ] REJECTED
- [ ] FOR INFORMATION ONLY

REVIEW IS FOR GENERAL COMPLIANCE WITH CONTRACT DOCUMENTS
NO RESPONSIBILITY ASSUMED FOR CORRECTNESS OF DIMENSIONS OR DETAILS

BY mwf DATE 2/14/2020

OHIO STRUCTURES INC.
535 NORTH BROAD STREET SUITE 5
CANFIELD, OHIO 44406
(330) 533-0084 FAX: (330) 533-0191

OHIO DEPARTMENT OF TRANSPORTATION
BRIDGE NO.: CUY - 010 - 1978R
OH-10 EASTBOUND OVER GCTRA BLUE AND GREEN LINES

SCALE: N.T.S.	KOKOSING CONST. CO. INC.	DRAWN: TJK
DATE: 10/19		CHECK: LF
REAR ABUTMENT EXPANSION JOINT - EJ22A - EASTBOUND		
REF NO.: BU19a		ITEM NO.: 516
ODOT PROJ. NO.: 173000	CUYAHOGA COUNTY	DWG. NO.: D1
OSI PROJ. NO.: 19-22	PID NO.: 96833 / SFN: 1801518	1 OF 11

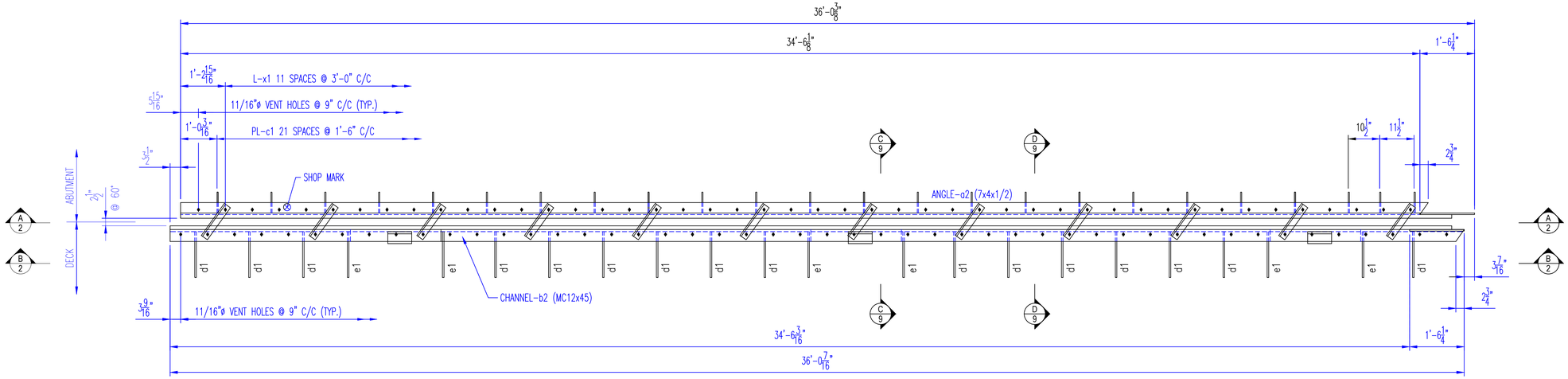

REAR EXPANSION JOINT EJ22B

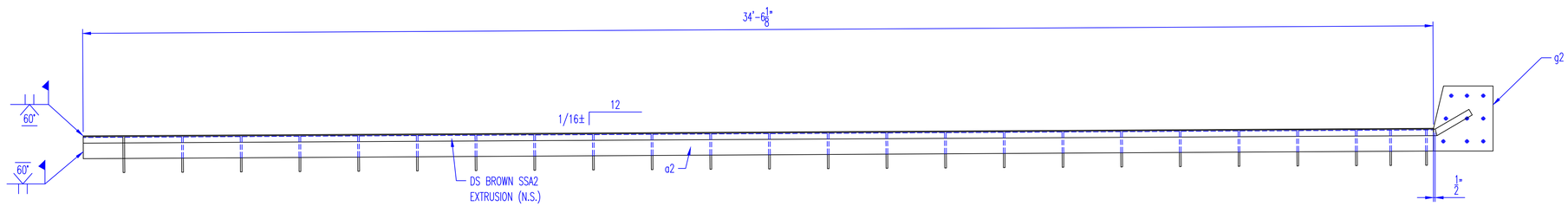

SECTION A/2

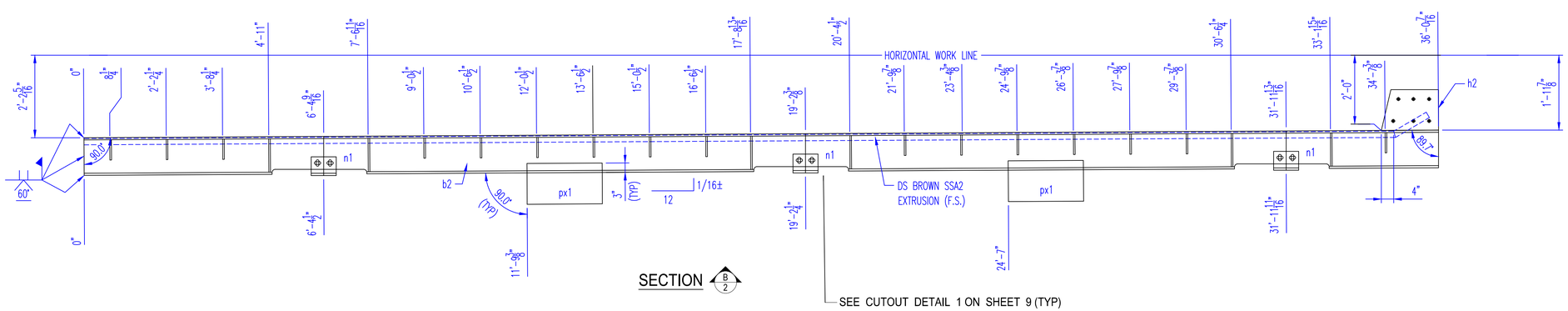

SECTION B/2

PAY LENGTH REAR ABT. 36.0FT.

NOTE:
PLATE px1 TO BE CVN

AISC CERTIFIED FABRICATOR

BRIDGE - INTERMEDIATE (MAJOR)
FRACTURE CRITICAL ENDORSEMENT
SOPHISTICATED PAINT ENDORSEMENT

NOTES:
SEE SHEET 5 & 6 FOR SIDEWALK AND GUSSET PLATE DETAILS
SEE SHEET 9 FOR EXPANSION JOINT DETAILS
SEE SHEET 10 FOR EXPANSION JOINT DETAILS, GENERAL NOTES & BILL OF MATERIAL
SEE SHEET 11 FOR EXPANSION JOINT LOCATION PLAN

REV. No.	REVISION
SHOP INSPECTED BY:	

KOKOSING CONSTRUCTION
- [x] NO EXCEPTIONS TAKEN
- [ ] MAKE CORRECTIONS AS NOTED
- [ ] REVISE AND RESUBMIT
- [ ] REJECTED
- [ ] FOR INFORMATION ONLY

REVIEW IS FOR GENERAL COMPLIANCE WITH CONTRACT DOCUMENTS
NO RESPONSIBILITY ASSUMED FOR CORRECTNESS OF DIMENSIONS OR DETAILS

BY mwf DATE 2/14/2020

OHIO STRUCTURES INC.
535 NORTH BROAD STREET SUITE 5
CANFIELD, OHIO 44406
(330) 533-0084 FAX: (330) 533-0191

OHIO DEPARTMENT OF TRANSPORTATION
BRIDGE NO.: CUY - 010 - 1978R
OH-10 EASTBOUND OVER GCTRA BLUE AND GREEN LINES

SCALE: N.T.S.	KOKOSING CONST. CO. INC.	DRAWN: TJK
DATE: 1/20		CHECK: LF
REAR ABUTMENT EXPANSION JOINT - EJ22B - EASTBOUND		
REF NO.: BU19a		ITEM NO.: 516
ODOT PROJ. NO.: 173000	CUYAHOGA COUNTY	DWG. NO.: D2
OSI PROJ. NO.: 19-22	PID NO.: 96833 / SFN: 1801518	2 OF 11

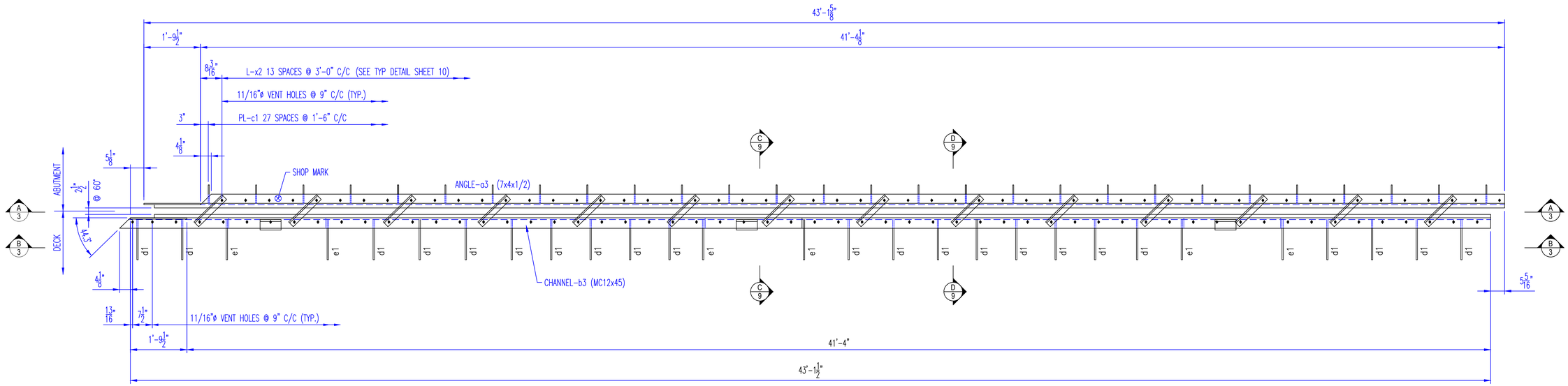

FORWARD EXPANSION JOINT EJ22C

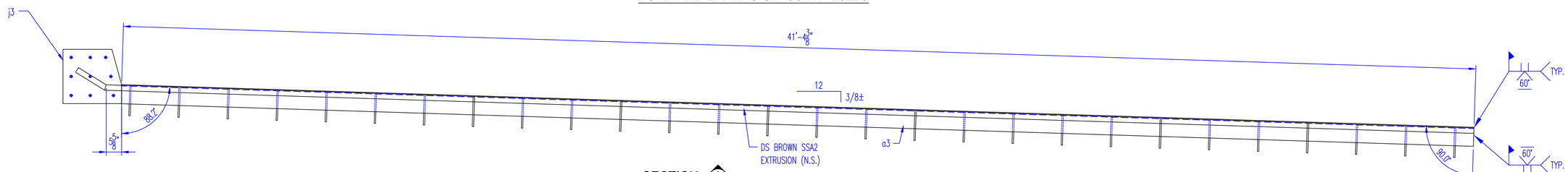

SECTION A 3

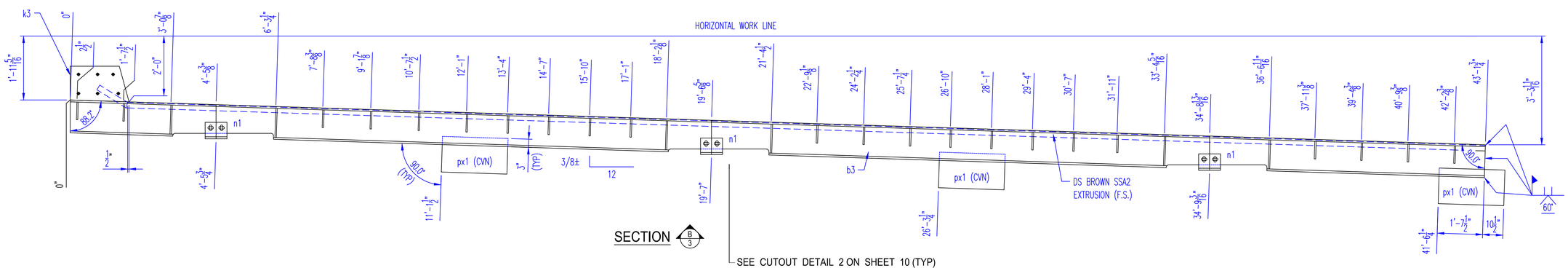

SECTION B 3

NOTE:

PLATE px1 TO BE CVN

TOTAL PAY LENGTH FWD ABUT: 85.0 FT.

PAY LENGTH: 43.25 FT.

NOTES:

SEE SHEET 7 & 8 FOR SIDEWALK AND GUSSET PLATE DETAILS

SEE SHEET 9 FOR EXPANSION JOINT DETAILS

SEE SHEET 10 FOR EXPANSION JOINT DETAILS, GENERAL NOTES & BILL OF MATERIAL

SEE SHEET 11 FOR EXPANSION JOINT LOCATION PLAN

AISC CERTIFIED FABRICATOR

BRIDGE - INTERMEDIATE (MAJOR)
FRACTURE CRITICAL ENDORSEMENT
SOPHISTICATED PAINT ENDORSEMENT

REV. No.	REVISION

SHOP INSPECTED BY:

KOKOSING CONSTRUCTION

- [x] NO EXCEPTIONS TAKEN
- [ ] MAKE CORRECTIONS AS NOTED
- [ ] REVISE AND RESUBMIT
- [ ] REJECTED
- [ ] FOR INFORMATION ONLY

REVIEW IS FOR GENERAL COMPLIANCE WITH CONTRACT DOCUMENTS
NO RESPONSIBILITY ASSUMED FOR CORRECTNESS OF DIMENSIONS OR DETAILS

BY mwf DATE 2/14/2020

OHIO STRUCTURES INC.
4030 Boardman Canfield Road, Ste. 200 D
Canfield, Ohio 44406
(330) 533-0084 FAX: (330) 533-0191

OHIO DEPARTMENT OF TRANSPORTATION
BRIDGE NO.: CUY - 010 - 1978R
OH-10 EASTBOUND OVER GCTRA BLUE AND GREEN LINES

SCALE: N.T.S.	KOKOSING CONST. CO. INC.	DRAWN: TJK
DATE: 1/20		CHECK: LF

FORWARD ABUTMENT EXPANSION JOINT - EJ22C - EASTBOUND

REF NO.: BU19a			ITEM NO.: 516
ODOT PROJ. NO.: 173000	CUYAHOGA COUNTY		DWG. NO.: D3
OSI PROJ. NO.: 19-22	PID NO.: 96833	SFN: 1801518	3 OF 11

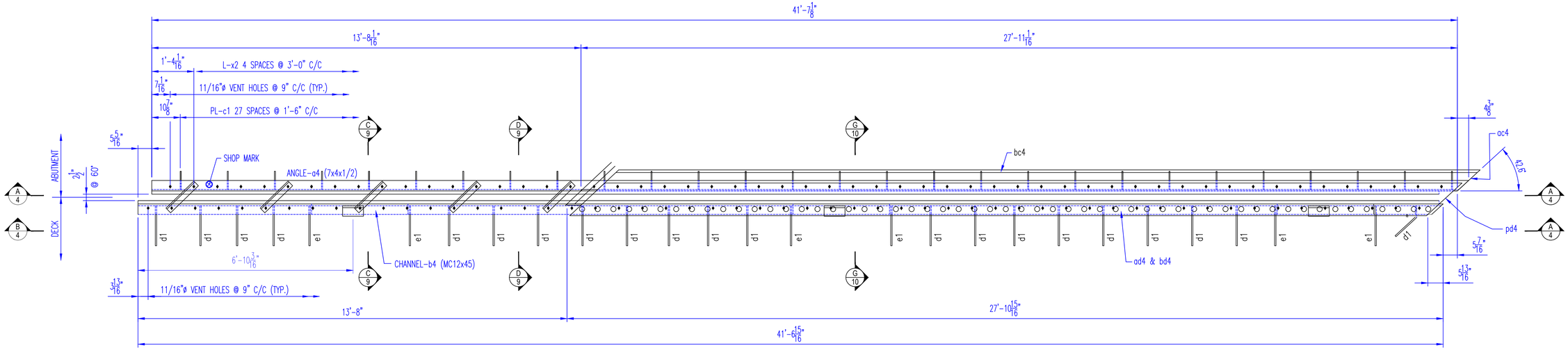

1 - FORWARD EXPANSION JOINT EJ22D

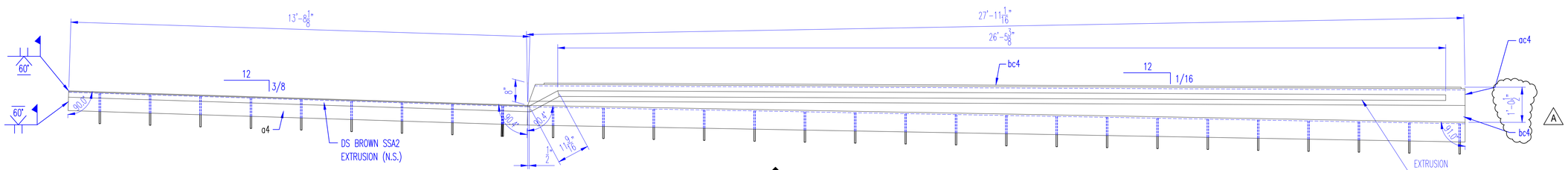

SECTION A/4

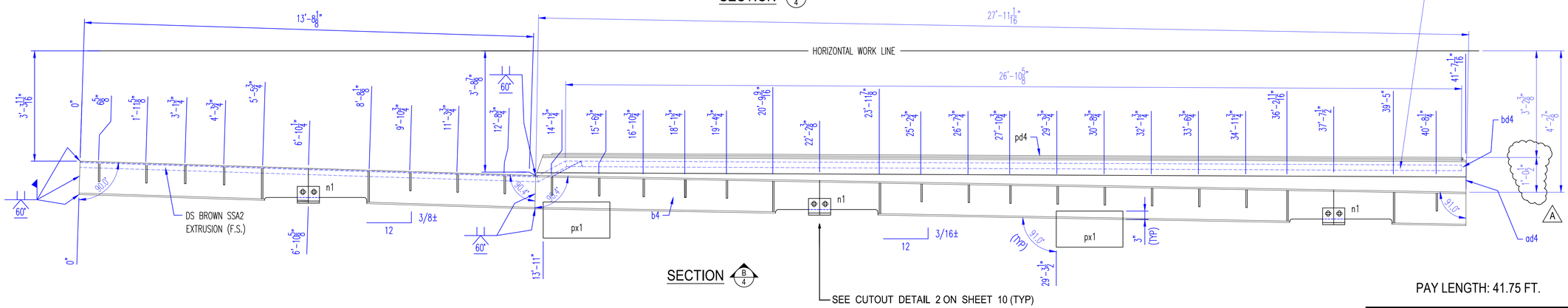

SECTION B/4

SEE CUTOUT DETAIL 2 ON SHEET 10 (TYP)

PAY LENGTH: 41.75 FT.

AISC CERTIFIED FABRICATOR

BRIDGE - INTERMEDIATE (MAJOR)
FRACTURE CRITICAL ENDORSEMENT
SOPHISTICATED PAINT ENDORSEMENT

APPROVAL

KOKOSING CONSTRUCTION

- [x] NO EXCEPTIONS TAKEN
- [ ] MAKE CORRECTIONS AS NOTED
- [ ] REVISE AND RESUBMIT
- [ ] REJECTED
- [ ] FOR INFORMATION ONLY

REVIEW IS FOR GENERAL COMPLIANCE WITH CONTRACT DOCUMENTS
NO RESPONSIBILITY ASSUMED FOR CORRECTNESS OF DIMENSIONS OR DETAILS

BY mwl DATE 2/14/2020

OHIO STRUCTURES INC.
535 NORTH BROAD STREET SUITE 5
CANFIELD, OHIO 44406
(330) 533-0084 FAX: (330) 533-0191

OHIO DEPARTMENT OF TRANSPORTATION
BRIDGE NO.: CUY - 010 - 1978R
OH-10 EASTBOUND OVER GCTRA BLUE AND GREEN LINES

SCALE: N.T.S.	KOKOSING CONST. CO. INC.	DRAWN: TJK
DATE: 10/19		CHECK: LF

FORWARD ABUTMENT EXPANSION JOINT - EJ22D - EASTBOUND

REF NO.: BU19a			ITEM NO.: 516
ODOT PROJ. NO.: 173000	CUYAHOGA COUNTY		DWG. NO.: D4
OSI PROJ. NO.: 19-22	PID NO.: 96833	SFN: 1801518	4 OF 11

NOTE:
PLATE px1 TO BE CVN

NOTES:
SEE SHEET 7 & 8 FOR SIDEWALK AND GUSSET PLATE DETAILS
SEE SHEET 9 FOR EXPANSION JOINT DETAILS
SEE SHEET 10 FOR EXPANSION JOINT DETAILS, GENERAL NOTES & BILL OF MATERIAL
SEE SHEET 11 FOR EXPANSION JOINT LOCATION PLAN

REV. No.	REVISION
A	REVISED PER CONTRACTOR 2/11/20
SHOP INSPECTED BY:	

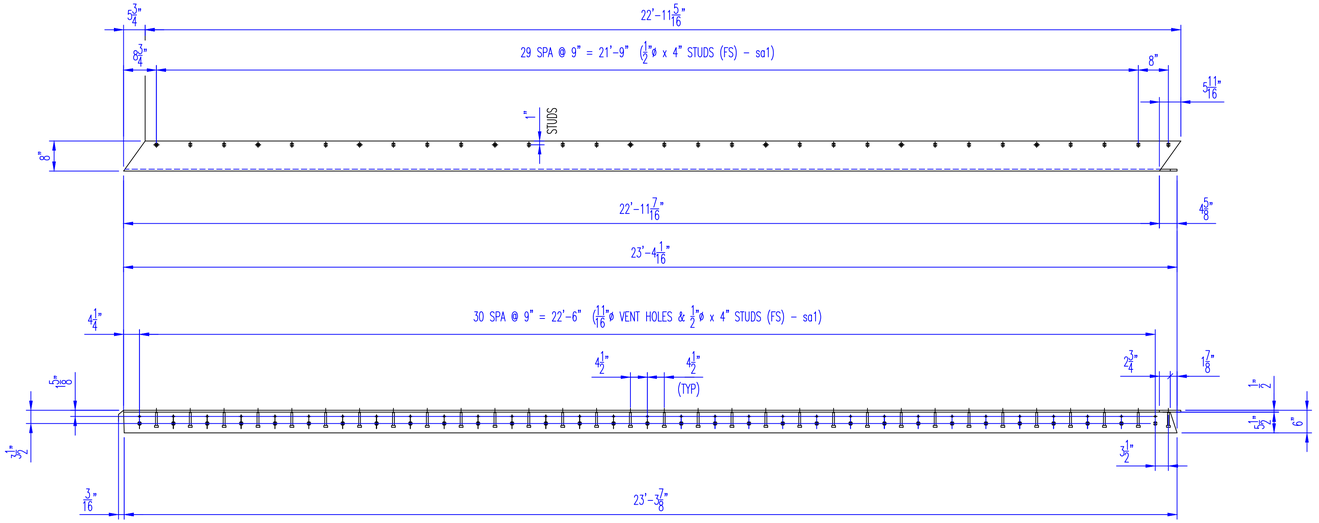

ANGLE - aa1

MATERIAL: L 8 x 6 x 1/2"

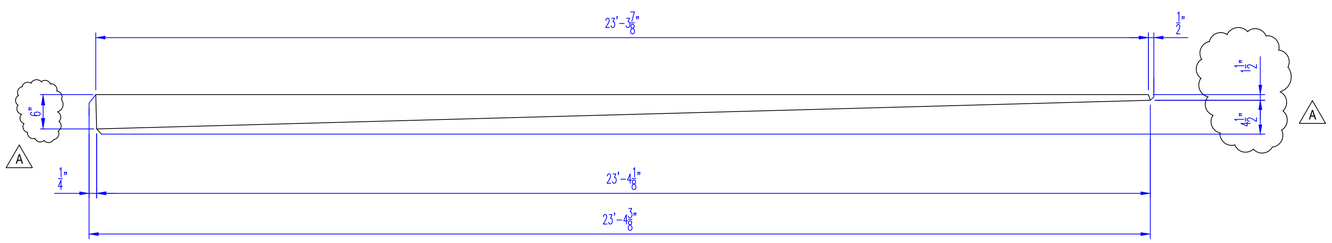

PLATE - pa1

MATERIAL: PL 1/2" x 9 1/8"

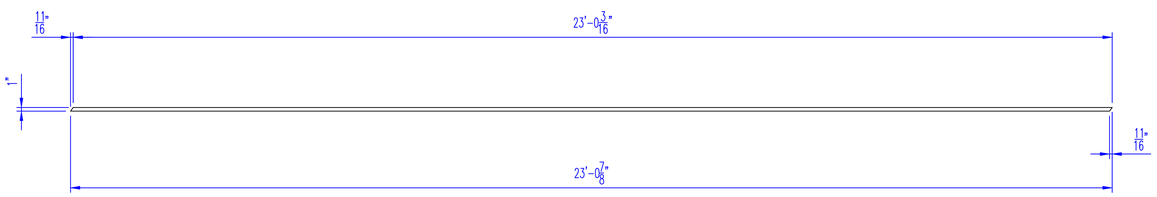

BAR - ba1

MATERIAL: BAR 1" x 1/2"

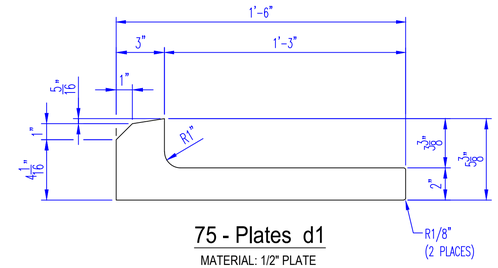

75 - Plates d1

MATERIAL: 1/2" PLATE

ADJUST SIZE TO FIT INSIDE THE MC12x45 CHANNEL

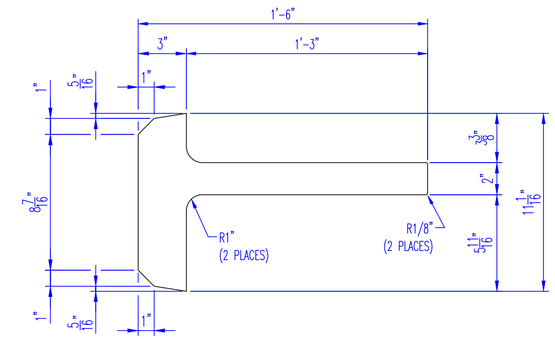

24 - Plates e1

MATERIAL: 1/2" PLATE

ADJUST SIZE TO FIT INSIDE THE MC12x45 CHANNEL

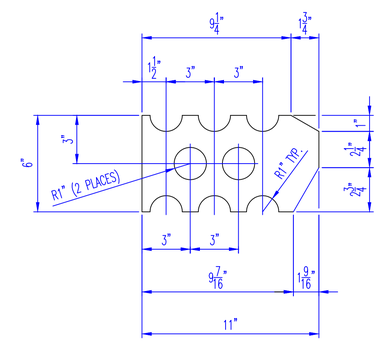

104 - Plates c1

MATERIAL: 3/8" PLATE

NOTE:

SEE SHEETS 1 THRU 4 FOR EXPANSION JOINT DETAILS

AISC CERTIFIED FABRICATOR

BRIDGE - INTERMEDIATE (MAJOR)
FRACTURE CRITICAL ENDORSEMENT
SOPHISTICATED PAINT ENDORSEMENT

REV. No.	REVISION
A	REVISED PER CONTRACTOR 2/11/20
SHOP INSPECTED BY:	

KOKOSING CONSTRUCTION

- [x] NO EXCEPTIONS TAKEN
- [ ] MAKE CORRECTIONS AS NOTED
- [ ] REVISE AND RESUBMIT
- [ ] REJECTED
- [ ] FOR INFORMATION ONLY

REVIEW IS FOR GENERAL COMPLIANCE WITH CONTRACT DOCUMENTS
NO RESPONSIBILITY ASSUMED FOR CORRECTNESS OF DIMENSIONS OR DETAILS

BY mwf DATE 2/14/2020

OHIO STRUCTURES INC.
4030 Boardman Canfield Road, Ste. 200 D
Canfield, Ohio 44406
(330) 533-0084 FAX: (330) 533-0191

OHIO DEPARTMENT OF TRANSPORTATION
BRIDGE NO.: CUY - 010 - 1978R
OH-10 EASTBOUND OVER GCTRA BLUE AND GREEN LINES

SCALE: N.T.S.	KOKOSING CONST. CO. INC.	DRAWN: TJK
DATE: 1/20		CHECK: LF
EXPANSION JOINT SIDEWALK & PLATE DETAILS		
REF NO.: BU19a		ITEM NO.: 516
ODOT PROJ. NO.: 173000	CUYAHOGA COUNTY	DWG. NO.: D5
OSI PROJ. NO.: 19-22	PID NO.: 96833 / SFN: 1801518	5 OF 11

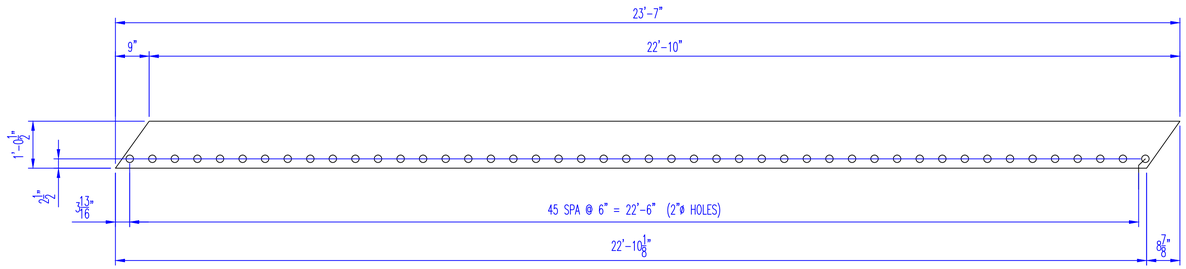

PLATE - pb1

MATERIAL: PL 1/2" x 12 1/2"

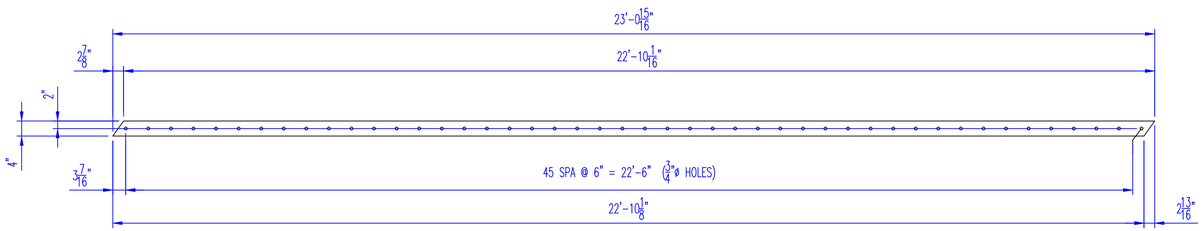

BAR - bb1

MATERIAL: BAR 4" x 1/2"

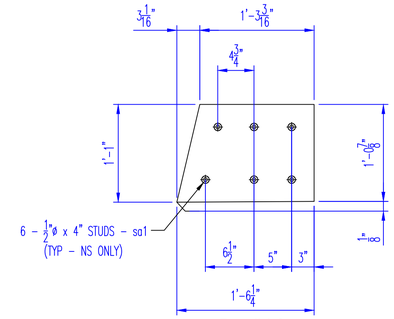

Detail-h2

MATERIAL: 1/2" PL

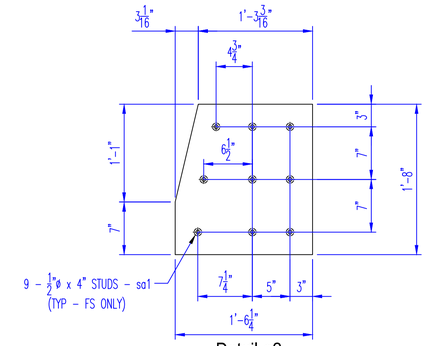

Detail-g2

MATERIAL: 1/2" PL

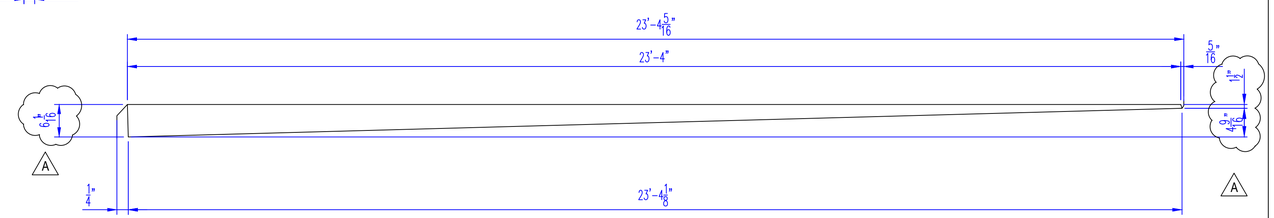

PLATE - pc1

MATERIAL: PL 1/2" x 8 5/8"

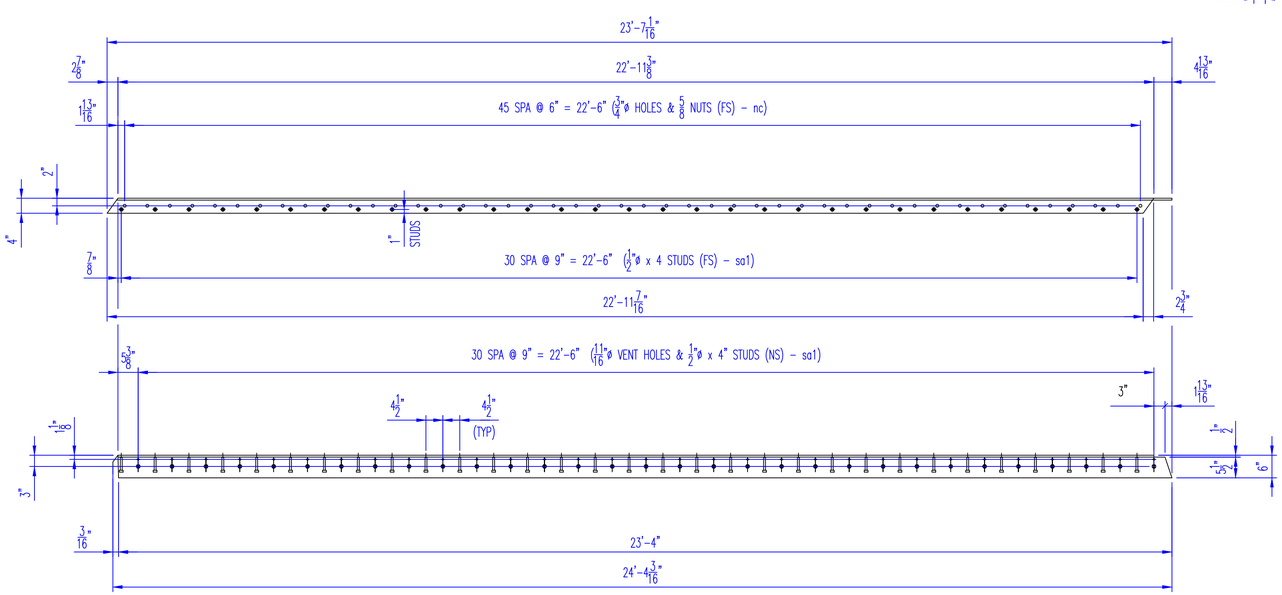

ANGLE - ab1

MATERIAL: L 6 x 4 x 1/2"

AISC CERTIFIED FABRICATOR

BRIDGE - INTERMEDIATE (MAJOR)
FRACTURE CRITICAL ENDORSEMENT
SOPHISTICATED PAINT ENDORSEMENT

REV. No.	REVISION
A	REVISED PER CONTRACTOR 2/11/20

SHOP INSPECTED BY:

KOKOSING CONSTRUCTION

- [x] NO EXCEPTIONS TAKEN
- [ ] MAKE CORRECTIONS AS NOTED
- [ ] REVISE AND RESUBMIT
- [ ] REJECTED
- [ ] FOR INFORMATION ONLY

REVIEW IS FOR GENERAL COMPLIANCE WITH CONTRACT DOCUMENTS
NO RESPONSIBILITY ASSUMED FOR CORRECTNESS OF DIMENSIONS OR DETAILS

BY mwf DATE 2/14/2020

OHIO STRUCTURES INC.
4030 Boardman Canfield Road, Ste. 200 D
Canfield, Ohio 44406
(330) 533-0084 FAX: (330) 533-0191

OHIO DEPARTMENT OF TRANSPORTATION
BRIDGE NO.: CUY - 010 - 1978R
OH-10 EASTBOUND OVER GCTRA BLUE AND GREEN LINES

SCALE: N.T.S.	KOKOSING CONST. CO. INC.	DRAWN: TJK
DATE: 1/20		CHECK: LF
EXPANSION JOINT SIDEWALK & PLATE DETAILS		
REF NO.: BU19a		ITEM NO.: 516
ODOT PROJ. NO.: 173000	CUYAHOGA COUNTY	DWG. NO.: D6
OSI PROJ. NO.: 19-22	PID NO.: 96833 SFN: 1801518	6 OF 11

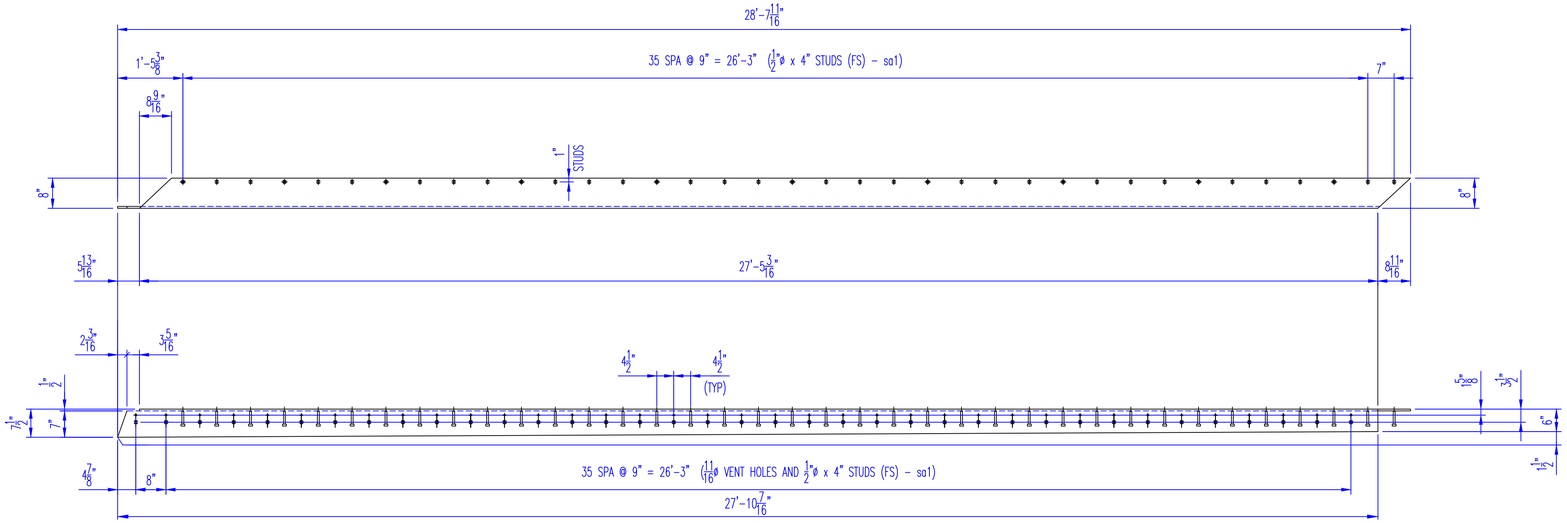

ANGLE - ac4

MATERIAL: 8 x 6 x 1/2"

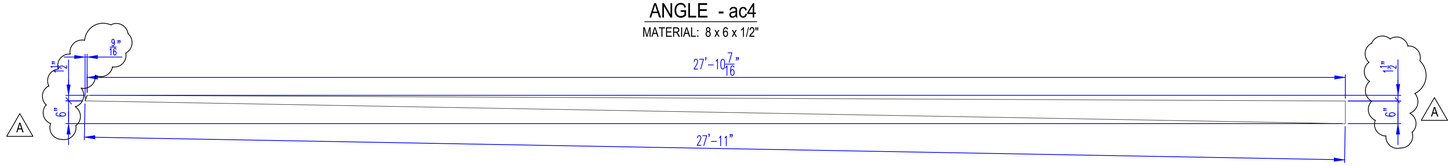

PLATE - ab4

MATERIAL: PL- 1/2"

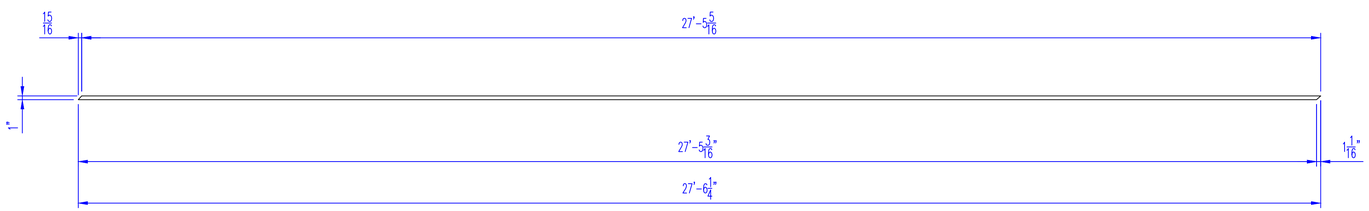

BAR - bc4

MATERIAL: BAR 1" x 1/2"

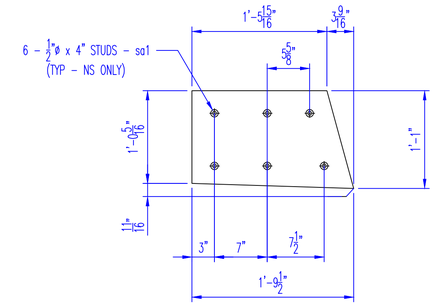

Detail-k3

MATERIAL: 1/2" PL

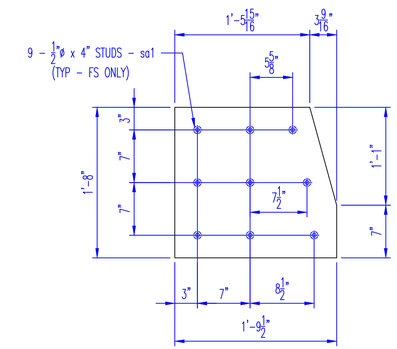

Detail-j3

MATERIAL: 1/2" PL

NOTE:

SEE SHEETS 1 THRU 4 FOR EXPANSION JOINT DETAILS

AISC CERTIFIED FABRICATOR

BRIDGE - INTERMEDIATE (MAJOR)
FRACTURE CRITICAL ENDORSEMENT
SOPHISTICATED PAINT ENDORSEMENT

REV. No.	REVISION
A	REVISED PER CONTRACTOR 2/11/20

SHOP INSPECTED BY:

KOKOSING CONSTRUCTION

- [x] NO EXCEPTIONS TAKEN
- [ ] MAKE CORRECTIONS AS NOTED
- [ ] REVISE AND RESUBMIT
- [ ] REJECTED
- [ ] FOR INFORMATION ONLY

REVIEW IS FOR GENERAL COMPLIANCE WITH CONTRACT DOCUMENTS
NO RESPONSIBILITY ASSUMED FOR CORRECTNESS OF DIMENSIONS OR DETAILS

BY mwf DATE 2/14/2020

OHIO STRUCTURES INC.
4030 Boardman Canfield Road, Ste. 200 D
Canfield, Ohio 44406
(330) 533-0084 FAX: (330) 533-0191

OHIO DEPARTMENT OF TRANSPORTATION
BRIDGE NO.: CUY - 010 - 1978R
OH-10 EASTBOUND OVER GCTRA BLUE AND GREEN LINES

SCALE: N.T.S.	KOKOSING CONST. CO. INC.	DRAWN: TJK
DATE: 1/20		CHECK: LF
EXPANSION JOINT SIDEWALK AND PLATE DETAILS		
REF NO.: BU19a		ITEM NO.: 516
ODOT PROJ. NO.: 173000	CUYAHOGA COUNTY	DWG. NO.: D7
OSI PROJ. NO.: 19-22	PID NO.: 96833 SFN: 1801518	7 OF 11

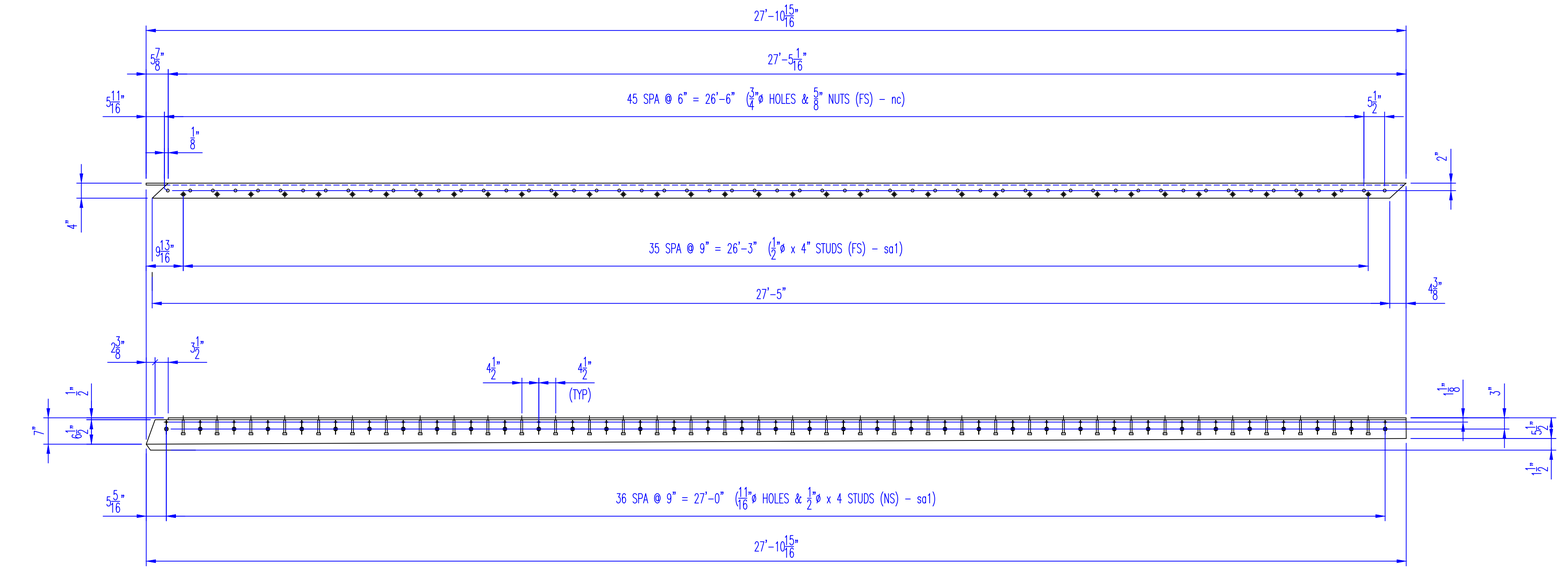

ANGLE - ad4

MATERIAL: L 8 x 4 x 1/2"

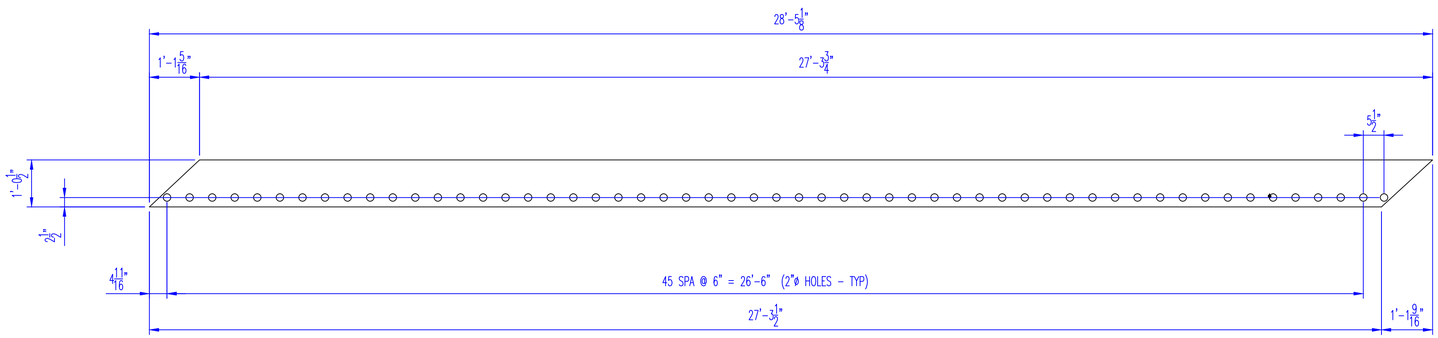

PLATE - pd4

MATERIAL: PL 1/2" x 12 1/2"

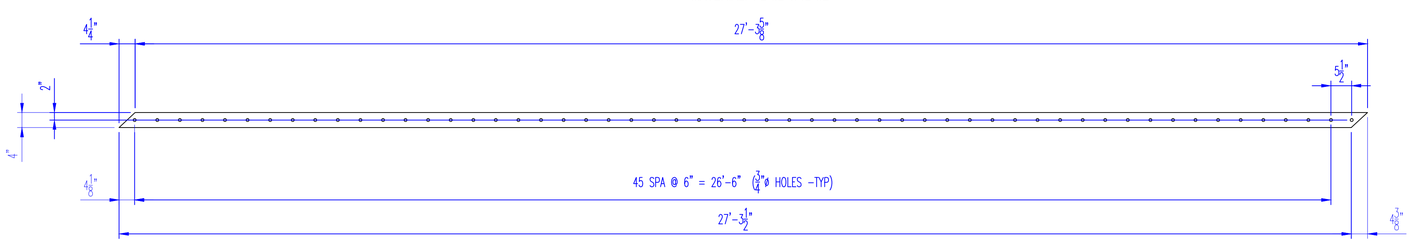

BAR - bd4

MATERIAL: BAR 4" x 1/2"

NOTE:

SEE SHEETS 1 THRU 4 FOR EXPANSION JOINT DETAILS

AISC CERTIFIED FABRICATOR

BRIDGE - INTERMEDIATE (MAJOR)
FRACTURE CRITICAL ENDORSEMENT
SOPHISTICATED PAINT ENDORSEMENT

REV. No.	REVISION
SHOP INSPECTED BY:	

KOKOSING CONSTRUCTION

- [x] NO EXCEPTIONS TAKEN
- [ ] MAKE CORRECTIONS AS NOTED
- [ ] REVISE AND RESUBMIT
- [ ] REJECTED
- [ ] FOR INFORMATION ONLY

REVIEW IS FOR GENERAL COMPLIANCE WITH CONTRACT DOCUMENTS
NO RESPONSIBILITY ASSUMED FOR CORRECTNESS OF DIMENSIONS OR DETAILS

BY mwf DATE 2/14/2020

OHIO STRUCTURES INC.
4030 Boardman Canfield Road, Ste. 200 D
Canfield, Ohio 44406
(330) 533-0084 FAX: (330) 533-0191

OHIO DEPARTMENT OF TRANSPORTATION
BRIDGE NO.: CUY - 010 - 1978R
OH-10 EASTBOUND OVER GCTRA BLUE AND GREEN LINES

SCALE: N.T.S.	KOKOSING CONST. CO. INC.	DRAWN: TJK
DATE: 1/20		CHECK: LF
EXPANSION JOINT SIDEWALK DETAILS		
REF NO.: BU19a		ITEM NO.: 516
ODOT PROJ. NO.: 173000	CUYAHOGA COUNTY	DWG. NO.: D8
OSI PROJ. NO.: 19-22	PID NO.: 96833 / SFN: 1801518	8 OF 11

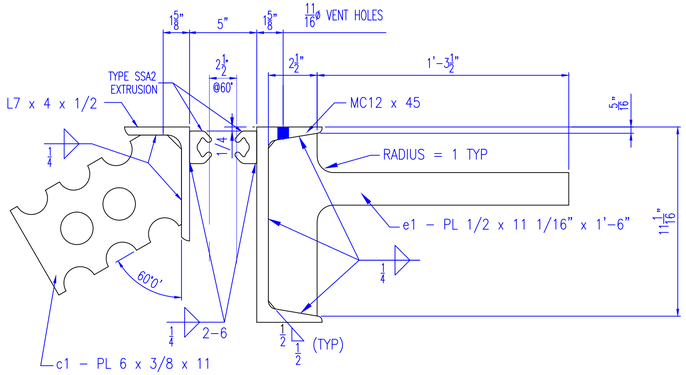

SECTION C 1 THRU 4

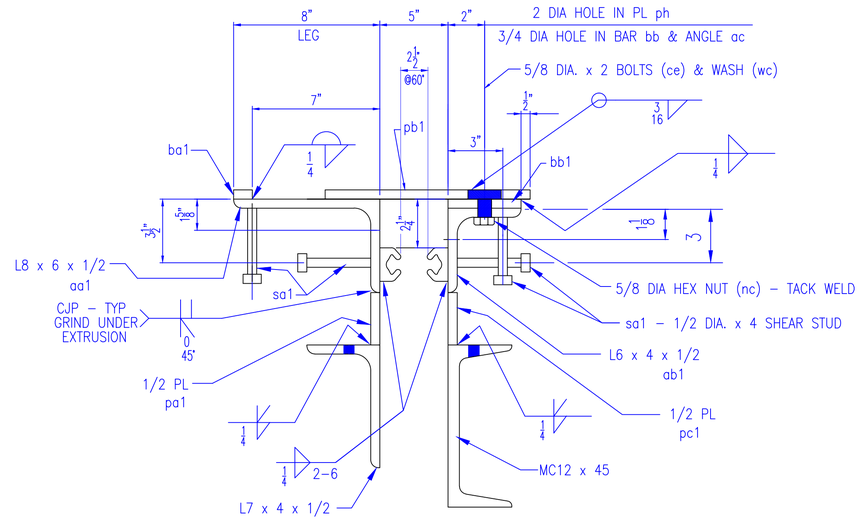

SECTION E 1 & 2

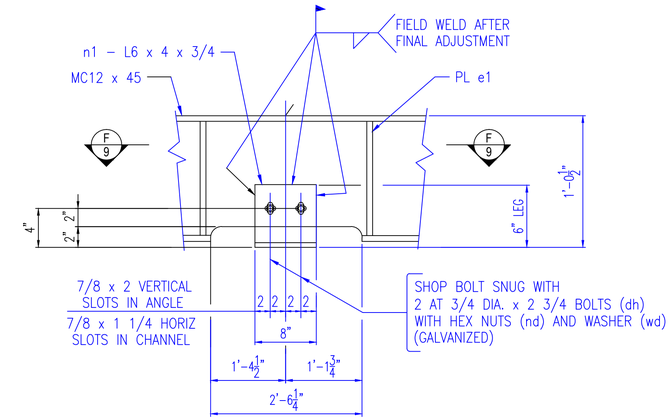

DETAIL '1'

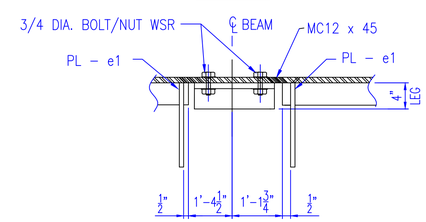

SECTION F 9

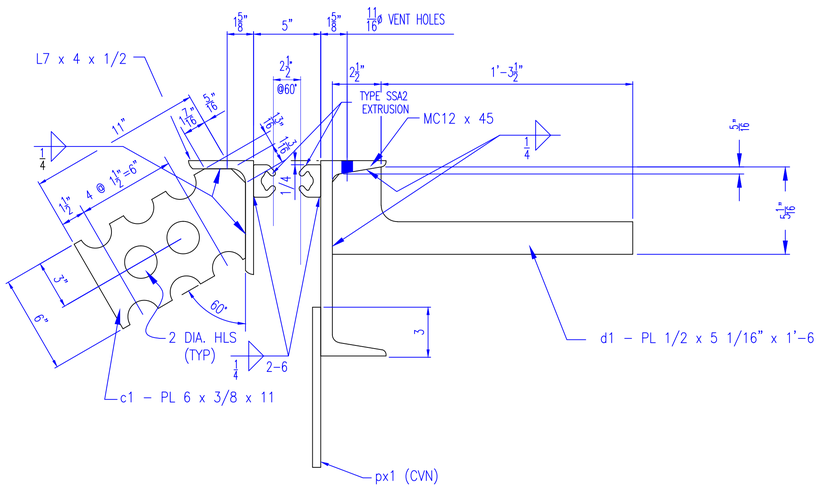

SECTION D 1 THRU 4

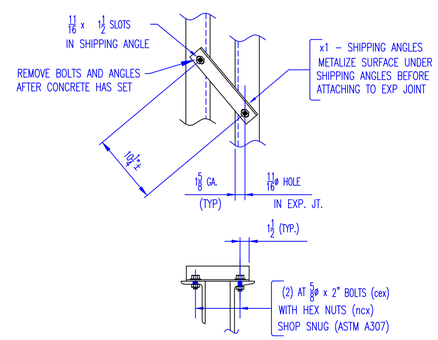

SHIPPING ANGLE DETAIL
FOR REAR ABUTMENT ONLY

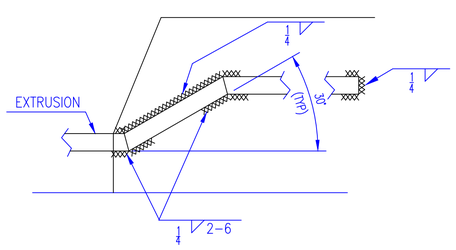

TYPICAL SIDEWALK/EXTRUSION WELD

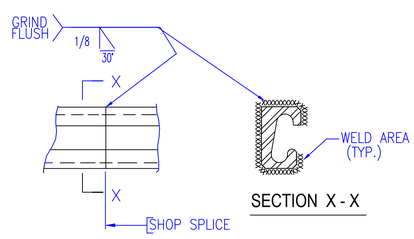

SECTION X - X

TYPICAL EXTRUSION
SHOP WELD SPLICE

NOTE:
SEE SHEETS 1 THRU 4 FOR EXPANSION JOINT DETAILS

AISC CERTIFIED FABRICATOR
BRIDGE - INTERMEDIATE (MAJOR)
FRACTURE CRITICAL ENDORSEMENT
SOPHISTICATED PAINT ENDORSEMENT

REV. No.	REVISION
SHOP INSPECTED BY:	

KOKOSING CONSTRUCTION
- [x] NO EXCEPTIONS TAKEN
- [ ] MAKE CORRECTIONS AS NOTED
- [ ] REVISE AND RESUBMIT
- [ ] REJECTED
- [ ] FOR INFORMATION ONLY

REVIEW IS FOR GENERAL COMPLIANCE WITH CONTRACT DOCUMENTS
NO RESPONSIBILITY ASSUMED FOR CORRECTNESS OF DIMENSIONS OR DETAILS

BY mwf DATE 2/14/2020

OHIO STRUCTURES INC.
4030 Boardman Canfield Road, Ste. 200D
Canfield, Ohio 44406
(330) 533-0084 FAX: (330) 533-0191

OHIO DEPARTMENT OF TRANSPORTATION
BRIDGE NO.: CUY - 010 - 1978R
OH-10 EASTBOUND OVER GCTRA BLUE AND GREEN LINES

SCALE: N.T.S.	KOKOSING CONST. CO. INC.	DRAWN: TJK
DATE: 1/20		CHECK: LF
EXPANSION JOINT SECTIONS AND DETAILS		
REF NO.: BU19a		ITEM NO.: 516
ODOT PROJ. NO.: 173000	CUYAHOGA COUNTY	DWG. NO.: D9
OSI PROJ. NO.: 19-22	PID NO.: 96833 / SFN: 1801518	9 OF 11

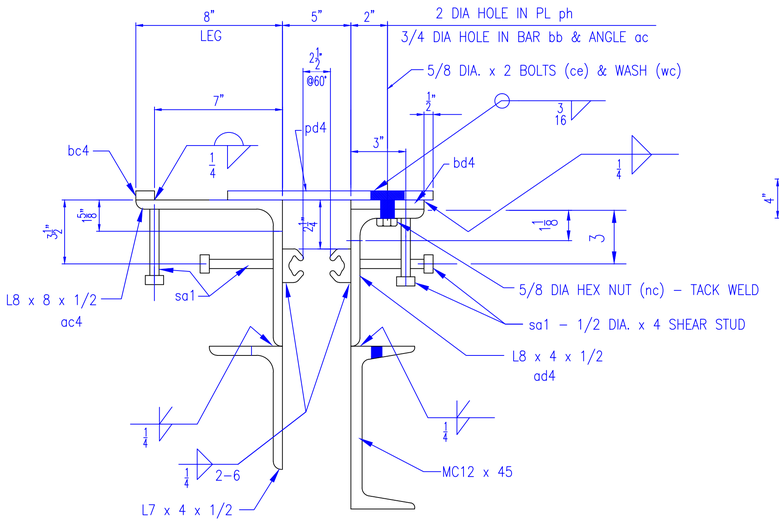

SECTION G 3 & 4

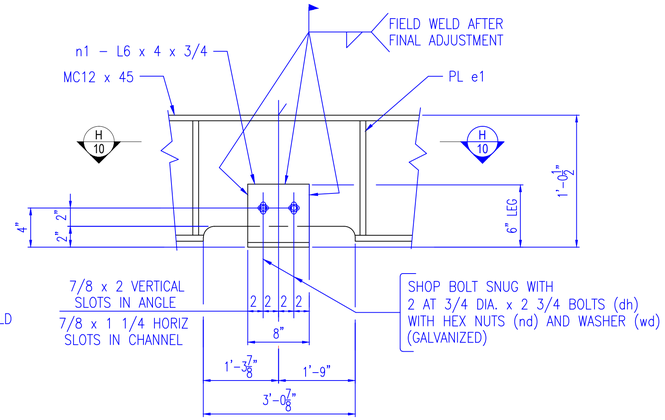

DETAIL '2'

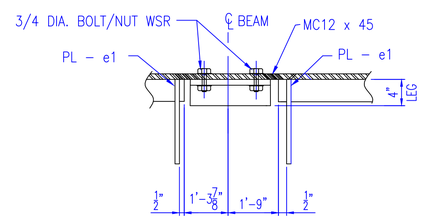

SECTION H 10

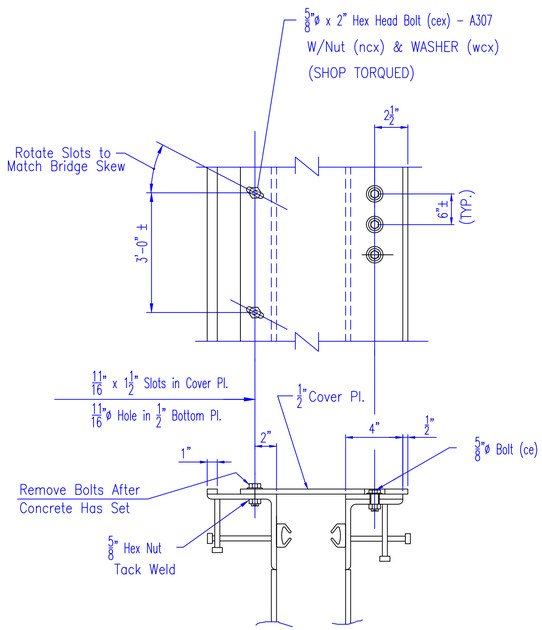

TYPICAL SIDEWALK SHIPPING CONNECTION DETAIL

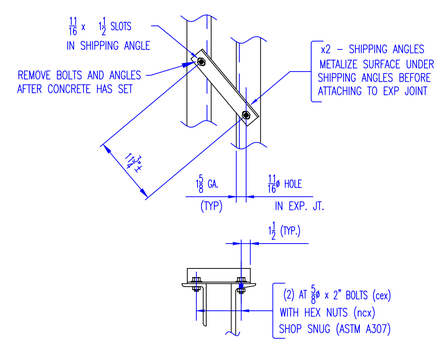

SHIPPING ANGLE DETAIL
FOR FORWARD ABUTMENT ONLY

GENERAL NOTES:

* MATERIAL AND WORKMANSHIP SHALL BE IN ACCORDANCE WITH ODOT-CMS-2016.
* WELDING SHALL BE IN ACCORDANCE WITH AWS/AASHTO D1.5-15 AND ODOT 1011.
* ALL MATERIAL TO BE METALIZED IN CONFORMANCE WITH O.D.O.T. STANDARD DRAWING EXJ-4-87 DATED 7/19/02.
* ALL INFORMATION & DIMENSIONS ARE TO BE APPROVED BY THE CONTRACTOR PRIOR TO COMMENCING FABRICATION.

NOTE:

SEE SHEETS 1 THRU 4 FOR EXPANSION JOINT DETAILS

ODOT PROJ NO. 173000	PID NO.: 96833	OSI PROJ #: 19-22	REF #: BU19a	ITEM#: 516

* * * EXPANSION JOINTS - EJ22A, EJ22B, EJ22C & EJ19D * * *

MATERIALS ONLY:

LINE	PO#	QTY	MARK	SECTION	LENGTH (FEET)	LENGTH (INCHES)	STL SPEC	PC WT (IN LBS)	NET WT (IN LBS)	HEAT #	REMARK
1		1	a1	ANGLE 7x4x1/2	35	2 1/4	A709-50	629.86	629.86		
2		1	a2	ANGLE 7x4x1/2	34	6 1/8	A709-50	617.74	617.74		
3		1	a3	ANGLE 7x4x1/2	41	4 3/8	A709-50	740.43	740.43		
4		1	a4	ANGLE 7x4x1/2	41	7 1/4	A709-50	744.71	744.71		
5		1	b1	MC12x45.0	35	2 3/4	A709-50	1,585.31	1,585.31		
6		1	b2	MC12x45.0	36	1/2	A709-50	1,621.88	1,621.88		
7		1	b3	MC12x45.0	43	1 3/4	A709-50	1,941.56	1,941.56		
8		1	b4	MC12x45.0	41	7 1/4	A709-50	1,872.19	1,872.19		
9											
10		24	e1	PLATE 1/2 x 14 3/16	1	6	A709-36	10.03	240.72		
11		75	d1	PLATE 1/2 x 5 3/8	1	6	A709-36	6.41	480.75		
12		104	c1	PLATE 3/8 x 6	0	11	A709-36	5.03	523.12		
13											
14		1	g2	PLATE 1/2 x 18 1/4	1	8	A709-36	51.75	51.75		
15		1	h2	PLATE 1/2 x 13	1	6 1/4	A709-36	33.64	33.64		
16		1	j3	PLATE 1/2 x 20	1	9 1/2	A709-36	60.97	60.97		
17		1	k3	PLATE 1/2 x 13	1	9 1/2	A709-36	39.63	39.63		
18											
19		1	aa1	ANGLE 8x6x1/2	23	4 1/16	A709-36	536.79	536.79		
20		1	pa1	PLATE 1/2 x 6	23	4 1/8	A709-36	178.73	178.73		
21		1	ba1	BAR 1 x 1/2	23	7/8	A709-36	29.44	29.44		
22		1	pb1	PLATE 1/2 x 12 1/2	23	7	A709-36	501.56	501.56		
23		1	bb1	BAR 4 x 1/2	23	15/16	A709-36	157.06	157.06		
24		1	ab1	ANGLE 6x4x5/8	23	7 1/16	A709-36	471.77	471.77		
25		1	pc1	PLATE 1/2 x 6	23	4 5/16	A709-36	180.71	180.71		
26											
27		1	ac4	ANGLE 8x6x1/2	27	10 7/16	A709-36	641.01	641.01		
28		1	bc4	BAR 1 x 1/2	27	6 1/4	A709-36	0.00	0.00		
29		1	ad4	ANGLE 8x4x1/2	27	11	A709-36	547.17	547.17		
30		1	pd4	PLATE 1/2 x 12 1/2	28	5 1/8	A709-36	0.00	0.00		
31		1	bd4	BAR 4 x 1/2	27	3 1/2	A709-36	0.00	0.00		
32											
33		10	px1	PLATE 1/2 x 11	2	6	A709-50-CVN	46.79	467.88		
34											
35		16	x1	ANGLE 2-1/2x2-1/2x1/4	1	1 1/4	A709-36	4.53	72.43		SHIPPING
36		19	x2	ANGLE 2-1/2x2-1/2x1/4	1	2 3/4	A709-36	5.04	95.75		SHIPPING
37											
38		12	n1	ANGLE 6x4x3/4	0	8	A709-50	15.73	188.80		
39											
40		* 1		A2R-XTRA STRIP SEAL	73	0					R ABUT - DS BROWN
41		* 1		A2R-XTRA STRIP SEAL	86	0					F ABUT - DS BROWN
42		* 13.6		SSA2 EXTRUSION	23	0	A709-36	122.23	1,662.33		DS BROWN
43		* 2.00		GAL OF GLUE							DS BROWN
44											
								SUB TOTAL	16,915.66		

HARDWARE ONLY:

LINE		QTY	MARK	DESCRIPTION		STL SPEC	WT PER (IN LBS)	NET WT (IN LBS)	HEAT #	REMARKS
45		86	cex	5/8x2 HEX HEAD BOLT		A307	0.26	22.02		SHIPPING
46		92	ce	5/8x2 HEX HEAD BOLT	A325	F3125 Galv	0.26	23.55		
47		92	wc	5/8 FLAT WASHER		F436 Galv	0.03	3.04		
		16	wcx	5/8 FLAT WASHER		F436	0.03	0.53		SHIPPING
48		92	nc	5/8 HEAVY HEX NUT		A563 Galv	0.12	11.04		
49		86	ncx	5/8 HEAVY HEX NUT		A563	0.12	10.32		SHIPPING
50										
51		24	ba	3/4x2-3/4 HEX HEAD BOLT	A325	F3125 Galv	0.48	11.54		
52		24	wa	3/4 FLAT WASHER		F436 Galv	0.04	0.98		
53		24	na	3/4 HEAVY HEX NUT		A563 Galv	0.20	4.80		
54										
55		301	sa1	1/2x4-1/8 CONCRETE ANCHOR		A108	0.28	84.88		
							SUB TOTAL	172.70		

* INDICATES AN ITEM THAT WILL BE SHIPPED LOOSE

TOTAL WT 17,088.36

AISC CERTIFIED FABRICATOR

BRIDGE - INTERMEDIATE (MAJOR)
FRACTURE CRITICAL ENDORSEMENT
SOPHISTICATED PAINT ENDORSEMENT

REV. No.	REVISION
SHOP INSPECTED BY:	

KOKOSING CONSTRUCTION
- [x] NO EXCEPTIONS TAKEN
- [ ] MAKE CORRECTIONS AS NOTED
- [ ] REVISE AND RESUBMIT
- [ ] REJECTED
- [ ] FOR INFORMATION ONLY

REVIEW IS FOR GENERAL COMPLIANCE WITH CONTRACT DOCUMENTS
NO RESPONSIBILITY ASSUMED FOR CORRECTNESS OF DIMENSIONS OR DETAILS

BY mwf DATE 2/14/2020

OHIO STRUCTURES INC.
4030 Boardman Canfield Road, Ste. 200D
Canfield, Ohio 44406
(330) 533-0084 FAX: (330) 533-0191

OHIO DEPARTMENT OF TRANSPORTATION
BRIDGE NO.: CUY - 010 - 1978R
OH-10 EASTBOUND OVER GCTRA BLUE AND GREEN LINES

SCALE: N.T.S.	KOKOSING CONST. CO. INC.	DRAWN: TJK
DATE: 1/20		CHECK: LF

EXPANSION JOINT SECTIONS, DETAILS & BOM

REF NO.: BU19a		ITEM NO.: 516
ODOT PROJ. NO.: 173000	CUYAHOGA COUNTY	DWG. NO.: D10
OSI PROJ. NO.: 19-22	PID NO.: 96833 / SFN: 1801518	10 OF 11

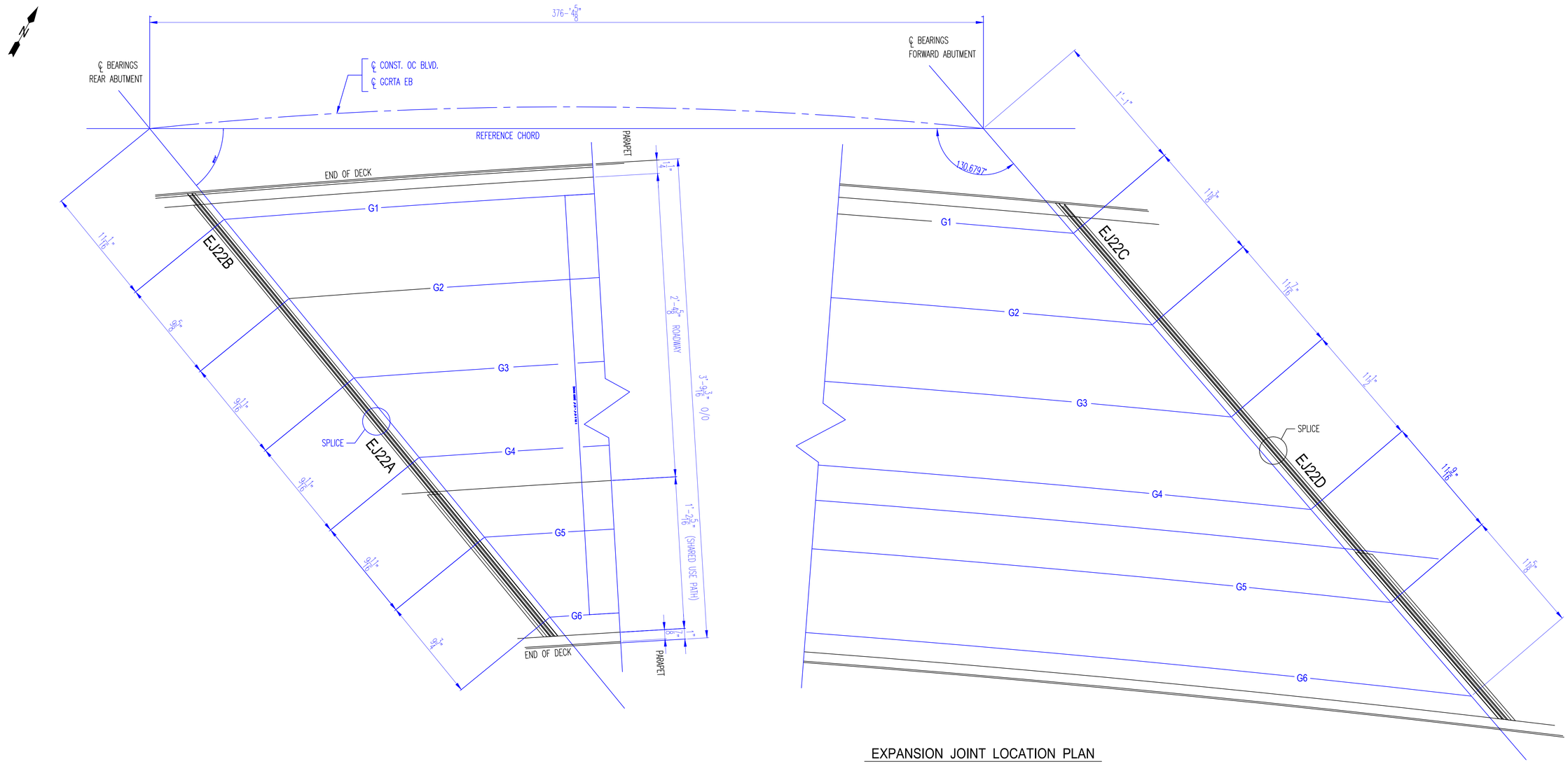

EXPANSION JOINT LOCATION PLAN

EASTBOUND

NOTES:

SEE SHEET E1 FOR EXPANSION JOINT LOCATION PLAN

SEE SHEET 3 FOR EXPANSION JOINT DETAILS, GENERAL NOTES & BILL OF MATERIAL

AISC CERTIFIED FABRICATOR

BRIDGE - INTERMEDIATE (MAJOR)
FRACTURE CRITICAL ENDORSEMENT
SOPHISTICATED PAINT ENDORSEMENT

REV. No.	REVISION

SHOP INSPECTED BY:

APPROVAL

KOKOSING CONSTRUCTION

- [x] NO EXCEPTIONS TAKEN
- [ ] MAKE CORRECTIONS AS NOTED
- [ ] REVISE AND RESUBMIT
- [ ] REJECTED
- [ ] FOR INFORMATION ONLY

REVIEW IS FOR GENERAL COMPLIANCE WITH CONTRACT DOCUMENTS
NO RESPONSIBILITY ASSUMED FOR CORRECTNESS OF DIMENSIONS OR DETAILS

BY mwf DATE 2/14/2020

OHIO STRUCTURES INC.
4030 Boardman Canfield Road, Ste. 200 D
Canfield, Ohio 44406
(330) 533-0084 FAX: (330) 533-0191

OHIO DEPARTMENT OF TRANSPORTATION
BRIDGE NO.: CUY - 010 - 1978R
OH-10 EASTBOUND OVER GCTRA BLUE AND GREEN LINES

SCALE: N.T.S.	KOKOSING CONST. CO. INC.	DRAWN: TJK
DATE: 1/20		CHECK: LF

EXPANSION JOINT LOCATION PLAN - EASTBOUND

REF NO.: BU19a			ITEM NO.: 516
ODOT PROJ. NO.: 173000	CUYAHOGA COUNTY		DWG. NO.: E1
OSI PROJ. NO.: 19-22	PID NO.: 96833	SFN: 1801518	11 OF 11

EASTBOUND

DWG NO.	DESCRIPTION	Detailer Initials	Detailer name	Checker Initials	Checker name	Revision
GN101	GENERAL NOTES	AM	Alexandru Marin	DP	David Pelchat	1
E101	ERECTION PLAN	AM	Alexandru Marin	DP	David Pelchat	1
E102	ERECTION PLAN	AM	Alexandru Marin	DP	David Pelchat	1
E103	ERECTION PLAN - SECTIONS	AM	Alexandru Marin	DP	David Pelchat	1
E104	ERECTION PLAN - SECTIONS	AM	Alexandru Marin	DP	David Pelchat	
E105	ERECTION PLAN - SECTIONS	AM	Alexandru Marin	DP	David Pelchat	1
E106	ERECTION PLAN - FIELD SPLICES	AM	Alexandru Marin	DP	David Pelchat	1
BD101	BLOCKING DIAGRAM	AM	Alexandru Marin	DP	David Pelchat	
BD102	BLOCKING DIAGRAM	AM	Alexandru Marin	DP	David Pelchat	
BD103	BLOCKING DIAGRAM	AM	Alexandru Marin	DP	David Pelchat	
BD104	BLOCKING DIAGRAM	AM	Alexandru Marin	DP	David Pelchat	
FA101	FULL ASSEMBLY DIAGRAM	AM	Alexandru Marin	EG	Eric Gingras	
BG101AB	CAMBER & FLANGES DIAGRAM	AM	Alexandru Marin	DP	David Pelchat	
BG101B	FLANGE DIAGRAM	AM	Alexandru Marin	DP	David Pelchat	
BG102AB	CAMBER & FLANGES DIAGRAM	AM	Alexandru Marin	DP	David Pelchat	
BG102B	FLANGE DIAGRAM	AM	Alexandru Marin	DP	David Pelchat	
BG103AB	CAMBER & FLANGES DIAGRAM	AM	Alexandru Marin	DP	David Pelchat	
BG103B	FLANGE DIAGRAM	AM	Alexandru Marin	DP	David Pelchat	
BG104AB	CAMBER & FLANGES DIAGRAM	AM	Alexandru Marin	DP	David Pelchat	
BG104B	FLANGE DIAGRAM	AM	Alexandru Marin	DP	David Pelchat	
BG105AB	CAMBER & FLANGES DIAGRAM	AM	Alexandru Marin	DP	David Pelchat	
BG105B	FLANGE DIAGRAM	AM	Alexandru Marin	DP	David Pelchat	
BG106AB	CAMBER & FLANGES DIAGRAM	AM	Alexandru Marin	DP	David Pelchat	
BG106B	FLANGE DIAGRAM	AM	Alexandru Marin	DP	David Pelchat	
BG107AB	CAMBER & FLANGES DIAGRAM	AM	Alexandru Marin	DP	David Pelchat	
BG107B	FLANGE DIAGRAM	AM	Alexandru Marin	DP	David Pelchat	
BG108AB	CAMBER & FLANGES DIAGRAM	AM	Alexandru Marin	DP	David Pelchat	
BG108B	FLANGE DIAGRAM	AM	Alexandru Marin	DP	David Pelchat	
BG109AB	CAMBER & FLANGES DIAGRAM	AM	Alexandru Marin	DP	David Pelchat	
BG109B	FLANGE DIAGRAM	AM	Alexandru Marin	DP	David Pelchat	
BG110AB	CAMBER & FLANGES DIAGRAM	AM	Alexandru Marin	DP	David Pelchat	
BG110B	FLANGE DIAGRAM	AM	Alexandru Marin	DP	David Pelchat	
BG111AB	CAMBER & FLANGES DIAGRAM	AM	Alexandru Marin	DP	David Pelchat	
BG111B	FLANGE DIAGRAM	AM	Alexandru Marin	DP	David Pelchat	
BG112AB	CAMBER & FLANGES DIAGRAM	AM	Alexandru Marin	DP	David Pelchat	
BG112B	FLANGE DIAGRAM	AM	Alexandru Marin	DP	David Pelchat	
BG113AB	CAMBER & FLANGES DIAGRAM	AM	Alexandru Marin	DP	David Pelchat	
BG113B	FLANGE DIAGRAM	AM	Alexandru Marin	DP	David Pelchat	
BG114AB	CAMBER & FLANGES DIAGRAM	AM	Alexandru Marin	DP	David Pelchat	
BG114B	FLANGE DIAGRAM	AM	Alexandru Marin	DP	David Pelchat	
BG115AB	CAMBER & FLANGES DIAGRAM	AM	Alexandru Marin	DP	David Pelchat	
BG115B	FLANGE DIAGRAM	AM	Alexandru Marin	DP	David Pelchat	
BG116AB	CAMBER & FLANGES DIAGRAM	AM	Alexandru Marin	DP	David Pelchat	
BG116B	FLANGE DIAGRAM	AM	Alexandru Marin	DP	David Pelchat	
BG117AB	CAMBER & FLANGES DIAGRAM	AM	Alexandru Marin	DP	David Pelchat	
BG117B	FLANGE DIAGRAM	AM	Alexandru Marin	DP	David Pelchat	
BG118AB	CAMBER & FLANGES DIAGRAM	AM	Alexandru Marin	DP	David Pelchat	
BG118B	FLANGE DIAGRAM	AM	Alexandru Marin	DP	David Pelchat	
BG119AB	CAMBER & FLANGES DIAGRAM	AM	Alexandru Marin	DP	David Pelchat	
BG119B	FLANGE DIAGRAM	AM	Alexandru Marin	DP	David Pelchat	
BG120AB	CAMBER & FLANGES DIAGRAM	AM	Alexandru Marin	DP	David Pelchat	
BG120B	FLANGE DIAGRAM	AM	Alexandru Marin	DP	David Pelchat	
BG121AB	CAMBER & FLANGES DIAGRAM	AM	Alexandru Marin	DP	David Pelchat	
BG121B	FLANGE DIAGRAM	AM	Alexandru Marin	DP	David Pelchat	
BG122AB	CAMBER & FLANGES DIAGRAM	AM	Alexandru Marin	DP	David Pelchat	
BG122B	FLANGE DIAGRAM	AM	Alexandru Marin	DP	David Pelchat	
BG123AB	CAMBER & FLANGES DIAGRAM	AM	Alexandru Marin	DP	David Pelchat	
BG123B	FLANGE DIAGRAM	AM	Alexandru Marin	DP	David Pelchat	
BG124AB	CAMBER & FLANGES DIAGRAM	AM	Alexandru Marin	DP	David Pelchat	
BG124B	FLANGE DIAGRAM	AM	Alexandru Marin	DP	David Pelchat	
BG125AB	CAMBER & FLANGES DIAGRAM	AM	Alexandru Marin	DP	David Pelchat	
BG125B	FLANGE DIAGRAM	AM	Alexandru Marin	DP	David Pelchat	
BG126AB	CAMBER & FLANGES DIAGRAM	AM	Alexandru Marin	DP	David Pelchat	
BG126B	FLANGE DIAGRAM	AM	Alexandru Marin	DP	David Pelchat	
BG127AB	CAMBER & FLANGES DIAGRAM	AM	Alexandru Marin	DP	David Pelchat	
BG127B	FLANGE DIAGRAM	AM	Alexandru Marin	DP	David Pelchat	
BG128AB	CAMBER & FLANGES DIAGRAM	AM	Alexandru Marin	DP	David Pelchat	
BG128B	FLANGE DIAGRAM	AM	Alexandru Marin	DP	David Pelchat	
BG129AB	CAMBER & FLANGES DIAGRAM	AM	Alexandru Marin	DP	David Pelchat	
BG129B	FLANGE DIAGRAM	AM	Alexandru Marin	DP	David Pelchat	
BG130AB	CAMBER & FLANGES DIAGRAM	AM	Alexandru Marin	DP	David Pelchat	
BG130B	FLANGE DIAGRAM	AM	Alexandru Marin	DP	David Pelchat	
FB101	FIELD BOLTS	AM	Alexandru Marin	DP	David Pelchat	1
HC101	HORIZONTAL CURVING DIAGRAMS	AM	Alexandru Marin	DP	David Pelchat	
HC102	HORIZONTAL CURVING DIAGRAMS	AM	Alexandru Marin	DP	David Pelchat	
HC103	HORIZONTAL CURVING DIAGRAMS	AM	Alexandru Marin	DP	David Pelchat	
HC104	HORIZONTAL CURVING DIAGRAMS	AM	Alexandru Marin	DP	David Pelchat	
HC105	HORIZONTAL CURVING DIAGRAMS	AM	Alexandru Marin	DP	David Pelchat	
P101	PAINT NOTES	AM	Alexandru Marin	DP	David Pelchat	1
X101	FIELD SPLICE DETAILS	AM	Alexandru Marin	DP	David Pelchat	1
X102	FIELD SPLICE DETAILS	AM	Alexandru Marin	DP	David Pelchat	1
X103	GIRDER DETAILS	AM	Alexandru Marin	DP	David Pelchat	
X104	ABUTMENT K-FRAME DETAILS	AM	Alexandru Marin	DP	David Pelchat	
X105	ABUTMENT K-FRAME DETAILS	AM	Alexandru Marin	DP	David Pelchat	
X106	ABUTMENT K-FRAME DETAILS	AM	Alexandru Marin	DP	David Pelchat	1
X107	PIER K-FRAME DETAILS	AM	Alexandru Marin	DP	David Pelchat	
X108	PIER K-FRAME DETAILS	AM	Alexandru Marin	DP	David Pelchat	
X109	PIER K-FRAME DETAILS	AM	Alexandru Marin	DP	David Pelchat	1
X110	PIER K-FRAME DETAILS	AM	Alexandru Marin	DP	David Pelchat	
X111	INTERMEDIATE K-FRAME DETAILS	AM	Alexandru Marin	DP	David Pelchat	1
X112	UTILITY SUPPORT & LEAN ON BRACING DETAILS	AM	Alexandru Marin	DP	David Pelchat	1
101	GIRDER 101A1	AM	Alexandru Marin	DP	David Pelchat	1
102AB	GIRDER 102B1	AM	Alexandru Marin	DP	David Pelchat	1
102B	GIRDER 102B1	AM	Alexandru Marin	DP	David Pelchat	
103AB	GIRDER 103C1	AM	Alexandru Marin	DP	David Pelchat	1
103B	GIRDER 103C1	AM	Alexandru Marin	DP	David Pelchat	
104AB	GIRDER 104D1	AM	Alexandru Marin	DP	David Pelchat	1
104B	GIRDER 104D1	AM	Alexandru Marin	DP	David Pelchat	
105AB	GIRDER 105E1	AM	Alexandru Marin	DP	David Pelchat	1
105B	GIRDER 105E1	AM	Alexandru Marin	DP	David Pelchat	
106	GIRDER 106F1	AM	Alexandru Marin	DP	David Pelchat	1
107	GIRDER 107A2	AM	Alexandru Marin	DP	David Pelchat	
108	GIRDER 108B2	AM	Alexandru Marin	DP	David Pelchat	
109	GIRDER 109C2	AM	Alexandru Marin	DP	David Pelchat	
110AB	GIRDER 110D2	AM	Alexandru Marin	DP	David Pelchat	
110B	GIRDER 110D2	AM	Alexandru Marin	DP	David Pelchat	
111	GIRDER 111E2	AM	Alexandru Marin	DP	David Pelchat	
112	GIRDER 112F2	AM	Alexandru Marin	DP	David Pelchat	
113	GIRDER 113A3	AM	Alexandru Marin	DP	David Pelchat	
114	GIRDER 114B3	AM	Alexandru Marin	DP	David Pelchat	
115	GIRDER 115C3	AM	Alexandru Marin	DP	David Pelchat	
116AB	GIRDER 116D3	AM	Alexandru Marin	DP	David Pelchat	
116B	GIRDER 116D3	AM	Alexandru Marin	DP	David Pelchat	
117	GIRDER 117E3	AM	Alexandru Marin	DP	David Pelchat	
118	GIRDER 118F3	AM	Alexandru Marin	DP	David Pelchat	
119	GIRDER 119A4	AM	Alexandru Marin	DP	David Pelchat	
120	GIRDER 120B4	AM	Alexandru Marin	DP	David Pelchat	
121	GIRDER 121C4	AM	Alexandru Marin	DP	David Pelchat	
122AB	GIRDER 122D4	AM	Alexandru Marin	DP	David Pelchat	
122B	GIRDER 122D4	AM	Alexandru Marin	DP	David Pelchat	
123	GIRDER 123E4	AM	Alexandru Marin	DP	David Pelchat	
124	GIRDER 124F4	AM	Alexandru Marin	DP	David Pelchat	
125	GIRDER 125A5	AM	Alexandru Marin	DP	David Pelchat	1
126AB	GIRDER 126B5	AM	Alexandru Marin	DP	David Pelchat	1
126B	GIRDER 126B5	AM	Alexandru Marin	DP	David Pelchat	
127AB	GIRDER 127C5	AM	Alexandru Marin	DP	David Pelchat	1
127B	GIRDER 127C5	AM	Alexandru Marin	DP	David Pelchat	
128AB	GIRDER 128D5	AM	Alexandru Marin	DP	David Pelchat	1
128B	GIRDER 128D5	AM	Alexandru Marin	DP	David Pelchat	
129AB	GIRDER 129E5	AM	Alexandru Marin	DP	David Pelchat	1
129B	GIRDER 129E5	AM	Alexandru Marin	DP	David Pelchat	
130	GIRDER 130F5	AM	Alexandru Marin	DP	David Pelchat	1
131	REAR ABUTMENT K-FRAME	AM	Alexandru Marin	DP	David Pelchat	
132	REAR ABUTMENT K-FRAME	AM	Alexandru Marin	DP	David Pelchat	
133	REAR ABUTMENT K-FRAME	AM	Alexandru Marin	DP	David Pelchat	
134	REAR ABUTMENT K-FRAME	AM	Alexandru Marin	DP	David Pelchat	
135	REAR ABUTMENT K-FRAME	AM	Alexandru Marin	DP	David Pelchat	
136	FORWARD ABUTMENT K-FRAME	AM	Alexandru Marin	DP	David Pelchat	
137	FORWARD ABUTMENT K-FRAME	AM	Alexandru Marin	DP	David Pelchat	
138	FORWARD ABUTMENT K-FRAME	AM	Alexandru Marin	DP	David Pelchat	
139	FORWARD ABUTMENT K-FRAME	AM	Alexandru Marin	DP	David Pelchat	
140	FORWARD ABUTMENT K-FRAME	AM	Alexandru Marin	DP	David Pelchat	
141	PIER 1 K-FRAME	AM	Alexandru Marin	DP	David Pelchat	
142	PIER 1 K-FRAME	AM	Alexandru Marin	DP	David Pelchat	
143	PIER 1 K-FRAME	AM	Alexandru Marin	DP	David Pelchat	
144	PIER 1 K-FRAME	AM	Alexandru Marin	DP	David Pelchat	
145	PIER 1 K-FRAME	AM	Alexandru Marin	DP	David Pelchat	
146	PIER 2 K-FRAME	AM	Alexandru Marin	DP	David Pelchat	
147	PIER 2 K-FRAME	AM	Alexandru Marin	DP	David Pelchat	
148	PIER 2 K-FRAME	AM	Alexandru Marin	DP	David Pelchat	
149	PIER 2 K-FRAME	AM	Alexandru Marin	DP	David Pelchat	
150	PIER 2 K-FRAME	AM	Alexandru Marin	DP	David Pelchat	
151	INTERMEDIATE K-FRAME	AM	Alexandru Marin	DP	David Pelchat	
152	INTERMEDIATE K-FRAME	AM	Alexandru Marin	DP	David Pelchat	
153	INTERMEDIATE K-FRAME	AM	Alexandru Marin	DP	David Pelchat	
154	INTERMEDIATE K-FRAME	AM	Alexandru Marin	DP	David Pelchat	
155	INTERMEDIATE K-FRAME	AM	Alexandru Marin	DP	David Pelchat	
156	INTERMEDIATE K-FRAME	AM	Alexandru Marin	DP	David Pelchat	
157	INTERMEDIATE K-FRAME	AM	Alexandru Marin	DP	David Pelchat	
158	INTERMEDIATE K-FRAME	AM	Alexandru Marin	DP	David Pelchat	
159	INTERMEDIATE K-FRAME	AM	Alexandru Marin	DP	David Pelchat	
160	INTERMEDIATE K-FRAME	AM	Alexandru Marin	DP	David Pelchat	
161	INTERMEDIATE K-FRAME	AM	Alexandru Marin	DP	David Pelchat	
162	INTERMEDIATE K-FRAME	AM	Alexandru Marin	DP	David Pelchat	
163	INTERMEDIATE K-FRAME	AM	Alexandru Marin	DP	David Pelchat	
164	INTERMEDIATE K-FRAME	AM	Alexandru Marin	DP	David Pelchat	
165	INTERMEDIATE K-FRAME	AM	Alexandru Marin	DP	David Pelchat	
166	INTERMEDIATE K-FRAME	AM	Alexandru Marin	DP	David Pelchat	
167	INTERMEDIATE K-FRAME	AM	Alexandru Marin	DP	David Pelchat	
168	INTERMEDIATE K-FRAME	AM	Alexandru Marin	DP	David Pelchat	
169	INTERMEDIATE K-FRAME	AM	Alexandru Marin	DP	David Pelchat	
170	GAS LINE UTILITY SUPPORT	AM	Alexandru Marin	DP	David Pelchat	1
171	CONDUIT UTILITY SUPPORT	AM	Alexandru Marin	DP	David Pelchat	1
172	LEAN ON BRACING	AM	Alexandru Marin	DP	David Pelchat	
173	LEAN ON BRACING	AM	Alexandru Marin	DP	David Pelchat	

SHOP DRAWING REVIEW

REVIEW IS FOR GENERAL COMPLIANCE WITH CONTRACT DOCUMENTS NO RESPONSIBILITY ASSUMED FOR CORRECTNESS OF DIMENSIONS OR DETAILS

NO EXCEPTIONS TAKEN	DFT
MAKE CORRECTIONS NOTED	
AMEND & RESUBMIT	
REJECTED – SEE REMARKS	

E.L. ROBINSON ENGINEERING

Date 11-8-19 By [signature]

STATE OF OHIO
DAVID F. TRAINI
E-48751
REGISTERED
PROFESSIONAL ENGINEER

[signature]

NO.	DATE	REMARKS	BY
2	11-01-19	REVISION 1 ADDED	DP
1	08-01-19	DRAWING FA101 ADDED	EG

REVISIONS

Veritas STEEL
2-EAU CLAIRE, WI 3-WAUSAU, WI 4-PALATKA, FL
TENCA 1605

STRUCTURE	CUY-010-1978R, OH-10 EASTBOUND OVER GCRTA BLUE AND GREEN LINES
LOCATION	CLEVELAND, OHIO CUYAHOGA COUNTY
PROJECT NO.	17-3000
ENGINEER	MICHAEL BAKER INTERNATIONAL
CONTRACTOR	KOKOSING
ITEM	INDEX SHEET
SURFACE PREP.	SEE P101 — OPEN HOLES $1\frac{1}{16}$"ø (U.N.O.)
PAINT	SEE P101

APPROVAL	DRAWN AM	05/09/19	SHEET NO.	PLANT	ORDER NO.
SHOP	CHECKED DP	06/12/19	INDEX	3	317023A

EASTBOUND

DWG NO.	DESCRIPTION	Detailer initials	Detailer name	Checker inititals	Checker name	Revision
GN101	GENERAL NOTES	AM	Alexandru Marin	DP	David Pelchat	1
E101	ERECTION PLAN	AM	Alexandru Marin	DP	David Pelchat	1
E102	ERECTION PLAN	AM	Alexandru Marin	DP	David Pelchat	1
E103	ERECTION PLAN - SECTIONS	AM	Alexandru Marin	DP	David Pelchat	1
E104	ERECTION PLAN - SECTIONS	AM	Alexandru Marin	DP	David Pelchat	
E105	ERECTION PLAN - SECTIONS	AM	Alexandru Marin	DP	David Pelchat	1
E106	ERECTION PLAN - FIELD SPLICES	AM	Alexandru Marin	DP	David Pelchat	1
BD101	BLOCKING DIAGRAM	AM	Alexandru Marin	DP	David Pelchat	
BD102	BLOCKING DIAGRAM	AM	Alexandru Marin	DP	David Pelchat	
BD103	BLOCKING DIAGRAM	AM	Alexandru Marin	DP	David Pelchat	
BD104	BLOCKING DIAGRAM	AM	Alexandru Marin	DP	David Pelchat	
FA101	FULL ASSEMBLY DIAGRAM	AM	Alexandru Marin	EG	Eric Gingras	
BG101AB	CAMBER & FLANGES DIAGRAM	AM	Alexandru Marin	DP	David Pelchat	
BG101B	FLANGE DIAGRAM	AM	Alexandru Marin	DP	David Pelchat	
BG102AB	CAMBER & FLANGES DIAGRAM	AM	Alexandru Marin	DP	David Pelchat	
BG102B	FLANGE DIAGRAM	AM	Alexandru Marin	DP	David Pelchat	
BG103AB	CAMBER & FLANGES DIAGRAM	AM	Alexandru Marin	DP	David Pelchat	
BG103B	FLANGE DIAGRAM	AM	Alexandru Marin	DP	David Pelchat	
BG104AB	CAMBER & FLANGES DIAGRAM	AM	Alexandru Marin	DP	David Pelchat	
BG104B	FLANGE DIAGRAM	AM	Alexandru Marin	DP	David Pelchat	
BG105AB	CAMBER & FLANGES DIAGRAM	AM	Alexandru Marin	DP	David Pelchat	
BG105B	FLANGE DIAGRAM	AM	Alexandru Marin	DP	David Pelchat	
BG106AB	CAMBER & FLANGES DIAGRAM	AM	Alexandru Marin	DP	David Pelchat	
BG106B	FLANGE DIAGRAM	AM	Alexandru Marin	DP	David Pelchat	
BG107AB	CAMBER & FLANGES DIAGRAM	AM	Alexandru Marin	DP	David Pelchat	
BG107B	FLANGE DIAGRAM	AM	Alexandru Marin	DP	David Pelchat	
BG108AB	CAMBER & FLANGES DIAGRAM	AM	Alexandru Marin	DP	David Pelchat	
BG108B	FLANGE DIAGRAM	AM	Alexandru Marin	DP	David Pelchat	
BG109AB	CAMBER & FLANGES DIAGRAM	AM	Alexandru Marin	DP	David Pelchat	
BG109B	FLANGE DIAGRAM	AM	Alexandru Marin	DP	David Pelchat	
BG110AB	CAMBER & FLANGES DIAGRAM	AM	Alexandru Marin	DP	David Pelchat	
BG110B	FLANGE DIAGRAM	AM	Alexandru Marin	DP	David Pelchat	
BG111AB	CAMBER & FLANGES DIAGRAM	AM	Alexandru Marin	DP	David Pelchat	
BG111B	FLANGE DIAGRAM	AM	Alexandru Marin	DP	David Pelchat	
BG112AB	CAMBER & FLANGES DIAGRAM	AM	Alexandru Marin	DP	David Pelchat	
BG112B	FLANGE DIAGRAM	AM	Alexandru Marin	DP	David Pelchat	
BG113AB	CAMBER & FLANGES DIAGRAM	AM	Alexandru Marin	DP	David Pelchat	
BG113B	FLANGE DIAGRAM	AM	Alexandru Marin	DP	David Pelchat	
BG114AB	CAMBER & FLANGES DIAGRAM	AM	Alexandru Marin	DP	David Pelchat	
BG114B	FLANGE DIAGRAM	AM	Alexandru Marin	DP	David Pelchat	
BG115AB	CAMBER & FLANGES DIAGRAM	AM	Alexandru Marin	DP	David Pelchat	
BG115B	FLANGE DIAGRAM	AM	Alexandru Marin	DP	David Pelchat	
BG116AB	CAMBER & FLANGES DIAGRAM	AM	Alexandru Marin	DP	David Pelchat	
BG116B	FLANGE DIAGRAM	AM	Alexandru Marin	DP	David Pelchat	
BG117AB	CAMBER & FLANGES DIAGRAM	AM	Alexandru Marin	DP	David Pelchat	
BG117B	FLANGE DIAGRAM	AM	Alexandru Marin	DP	David Pelchat	
BG118AB	CAMBER & FLANGES DIAGRAM	AM	Alexandru Marin	DP	David Pelchat	
BG118B	FLANGE DIAGRAM	AM	Alexandru Marin	DP	David Pelchat	
BG119AB	CAMBER & FLANGES DIAGRAM	AM	Alexandru Marin	DP	David Pelchat	
BG119B	FLANGE DIAGRAM	AM	Alexandru Marin	DP	David Pelchat	
BG120AB	CAMBER & FLANGES DIAGRAM	AM	Alexandru Marin	DP	David Pelchat	
BG120B	FLANGE DIAGRAM	AM	Alexandru Marin	DP	David Pelchat	
BG121AB	CAMBER & FLANGES DIAGRAM	AM	Alexandru Marin	DP	David Pelchat	
BG121B	FLANGE DIAGRAM	AM	Alexandru Marin	DP	David Pelchat	
BG122AB	CAMBER & FLANGES DIAGRAM	AM	Alexandru Marin	DP	David Pelchat	
BG122B	FLANGE DIAGRAM	AM	Alexandru Marin	DP	David Pelchat	
BG123AB	CAMBER & FLANGES DIAGRAM	AM	Alexandru Marin	DP	David Pelchat	
BG123B	FLANGE DIAGRAM	AM	Alexandru Marin	DP	David Pelchat	
BG124AB	CAMBER & FLANGES DIAGRAM	AM	Alexandru Marin	DP	David Pelchat	
BG124B	FLANGE DIAGRAM	AM	Alexandru Marin	DP	David Pelchat	
BG125AB	CAMBER & FLANGES DIAGRAM	AM	Alexandru Marin	DP	David Pelchat	
BG125B	FLANGE DIAGRAM	AM	Alexandru Marin	DP	David Pelchat	
BG126AB	CAMBER & FLANGES DIAGRAM	AM	Alexandru Marin	DP	David Pelchat	
BG126B	FLANGE DIAGRAM	AM	Alexandru Marin	DP	David Pelchat	
BG127AB	CAMBER & FLANGES DIAGRAM	AM	Alexandru Marin	DP	David Pelchat	
BG127B	FLANGE DIAGRAM	AM	Alexandru Marin	DP	David Pelchat	
BG128AB	CAMBER & FLANGES DIAGRAM	AM	Alexandru Marin	DP	David Pelchat	
BG128B	FLANGE DIAGRAM	AM	Alexandru Marin	DP	David Pelchat	
BG129AB	CAMBER & FLANGES DIAGRAM	AM	Alexandru Marin	DP	David Pelchat	
BG129B	FLANGE DIAGRAM	AM	Alexandru Marin	DP	David Pelchat	
BG130AB	CAMBER & FLANGES DIAGRAM	AM	Alexandru Marin	DP	David Pelchat	
BG130B	FLANGE DIAGRAM	AM	Alexandru Marin	DP	David Pelchat	
FB101	FIELD BOLTS	AM	Alexandru Marin	DP	David Pelchat	1
HC101	HORIZONTAL CURVING DIAGRAMS	AM	Alexandru Marin	DP	David Pelchat	
HC102	HORIZONTAL CURVING DIAGRAMS	AM	Alexandru Marin	DP	David Pelchat	
HC103	HORIZONTAL CURVING DIAGRAMS	AM	Alexandru Marin	DP	David Pelchat	
HC104	HORIZONTAL CURVING DIAGRAMS	AM	Alexandru Marin	DP	David Pelchat	
HC105	HORIZONTAL CURVING DIAGRAMS	AM	Alexandru Marin	DP	David Pelchat	
P101	PAINT NOTES	AM	Alexandru Marin	DP	David Pelchat	1
X101	FIELD SPLICE DETAILS	AM	Alexandru Marin	DP	David Pelchat	1
X102	FIELD SPLICE DETAILS	AM	Alexandru Marin	DP	David Pelchat	1
X103	GIRDER DETAILS	AM	Alexandru Marin	DP	David Pelchat	
X104	ABUTMENT K-FRAME DETAILS	AM	Alexandru Marin	DP	David Pelchat	
X105	ABUTMENT K-FRAME DETAILS	AM	Alexandru Marin	DP	David Pelchat	
X106	ABUTMENT K-FRAME DETAILS	AM	Alexandru Marin	DP	David Pelchat	1
X107	PIER K-FRAME DETAILS	AM	Alexandru Marin	DP	David Pelchat	
X108	PIER K-FRAME DETAILS	AM	Alexandru Marin	DP	David Pelchat	
X109	PIER K-FRAME DETAILS	AM	Alexandru Marin	DP	David Pelchat	1
X110	PIER K-FRAME DETAILS	AM	Alexandru Marin	DP	David Pelchat	
X111	INTERMEDIATE K-FRAME DETAILS	AM	Alexandru Marin	DP	David Pelchat	1
X112	UTILITY SUPPORT & LEAN ON BRACING DETAILS	AM	Alexandru Marin	DP	David Pelchat	1
101	GIRDER 101A1	AM	Alexandru Marin	DP	David Pelchat	1
102AB	GIRDER 102B1	AM	Alexandru Marin	DP	David Pelchat	1
102B	GIRDER 102B1	AM	Alexandru Marin	DP	David Pelchat	
103AB	GIRDER 103C1	AM	Alexandru Marin	DP	David Pelchat	1
103B	GIRDER 103C1	AM	Alexandru Marin	DP	David Pelchat	
104AB	GIRDER 104D1	AM	Alexandru Marin	DP	David Pelchat	1
104B	GIRDER 104D1	AM	Alexandru Marin	DP	David Pelchat	
105AB	GIRDER 105E1	AM	Alexandru Marin	DP	David Pelchat	1
105B	GIRDER 105E1	AM	Alexandru Marin	DP	David Pelchat	
106	GIRDER 106F1	AM	Alexandru Marin	DP	David Pelchat	1
107	GIRDER 107A2	AM	Alexandru Marin	DP	David Pelchat	
108	GIRDER 108B2	AM	Alexandru Marin	DP	David Pelchat	
109	GIRDER 109C2	AM	Alexandru Marin	DP	David Pelchat	
110AB	GIRDER 110D2	AM	Alexandru Marin	DP	David Pelchat	
110B	GIRDER 110D2	AM	Alexandru Marin	DP	David Pelchat	
111	GIRDER 111E2	AM	Alexandru Marin	DP	David Pelchat	
112	GIRDER 112F2	AM	Alexandru Marin	DP	David Pelchat	
113	GIRDER 113A3	AM	Alexandru Marin	DP	David Pelchat	
114	GIRDER 114B3	AM	Alexandru Marin	DP	David Pelchat	
115	GIRDER 115C3	AM	Alexandru Marin	DP	David Pelchat	
116AB	GIRDER 116D3	AM	Alexandru Marin	DP	David Pelchat	
116B	GIRDER 116D3	AM	Alexandru Marin	DP	David Pelchat	
117	GIRDER 117E3	AM	Alexandru Marin	DP	David Pelchat	
118	GIRDER 118F3	AM	Alexandru Marin	DP	David Pelchat	
119	GIRDER 119A4	AM	Alexandru Marin	DP	David Pelchat	
120	GIRDER 120B4	AM	Alexandru Marin	DP	David Pelchat	
121	GIRDER 121C4	AM	Alexandru Marin	DP	David Pelchat	
122AB	GIRDER 122D4	AM	Alexandru Marin	DP	David Pelchat	
122B	GIRDER 122D4	AM	Alexandru Marin	DP	David Pelchat	
123	GIRDER 123E4	AM	Alexandru Marin	DP	David Pelchat	
124	GIRDER 124F4	AM	Alexandru Marin	DP	David Pelchat	
125	GIRDER 125A5	AM	Alexandru Marin	DP	David Pelchat	1
126AB	GIRDER 126B5	AM	Alexandru Marin	DP	David Pelchat	1
126B	GIRDER 126B5	AM	Alexandru Marin	DP	David Pelchat	
127AB	GIRDER 127C5	AM	Alexandru Marin	DP	David Pelchat	1
127B	GIRDER 127C5	AM	Alexandru Marin	DP	David Pelchat	
128AB	GIRDER 128D5	AM	Alexandru Marin	DP	David Pelchat	1
128B	GIRDER 128D5	AM	Alexandru Marin	DP	David Pelchat	
129AB	GIRDER 129E5	AM	Alexandru Marin	DP	David Pelchat	1
129B	GIRDER 129E5	AM	Alexandru Marin	DP	David Pelchat	
130	GIRDER 130F5	AM	Alexandru Marin	DP	David Pelchat	1
131	REAR ABUTMENT K-FRAME	AM	Alexandru Marin	DP	David Pelchat	
132	REAR ABUTMENT K-FRAME	AM	Alexandru Marin	DP	David Pelchat	
133	REAR ABUTMENT K-FRAME	AM	Alexandru Marin	DP	David Pelchat	
134	REAR ABUTMENT K-FRAME	AM	Alexandru Marin	DP	David Pelchat	
135	REAR ABUTMENT K-FRAME	AM	Alexandru Marin	DP	David Pelchat	
136	FORWARD ABUTMENT K-FRAME	AM	Alexandru Marin	DP	David Pelchat	
137	FORWARD ABUTMENT K-FRAME	AM	Alexandru Marin	DP	David Pelchat	
138	FORWARD ABUTMENT K-FRAME	AM	Alexandru Marin	DP	David Pelchat	
139	FORWARD ABUTMENT K-FRAME	AM	Alexandru Marin	DP	David Pelchat	
140	FORWARD ABUTMENT K-FRAME	AM	Alexandru Marin	DP	David Pelchat	
141	PIER 1 K-FRAME	AM	Alexandru Marin	DP	David Pelchat	
142	PIER 1 K-FRAME	AM	Alexandru Marin	DP	David Pelchat	
143	PIER 1 K-FRAME	AM	Alexandru Marin	DP	David Pelchat	
144	PIER 1 K-FRAME	AM	Alexandru Marin	DP	David Pelchat	
145	PIER 1 K-FRAME	AM	Alexandru Marin	DP	David Pelchat	
146	PIER 2 K-FRAME	AM	Alexandru Marin	DP	David Pelchat	
147	PIER 2 K-FRAME	AM	Alexandru Marin	DP	David Pelchat	
148	PIER 2 K-FRAME	AM	Alexandru Marin	DP	David Pelchat	
149	PIER 2 K-FRAME	AM	Alexandru Marin	DP	David Pelchat	
150	PIER 2 K-FRAME	AM	Alexandru Marin	DP	David Pelchat	
151	INTERMEDIATE K-FRAME	AM	Alexandru Marin	DP	David Pelchat	
152	INTERMEDIATE K-FRAME	AM	Alexandru Marin	DP	David Pelchat	
153	INTERMEDIATE K-FRAME	AM	Alexandru Marin	DP	David Pelchat	
154	INTERMEDIATE K-FRAME	AM	Alexandru Marin	DP	David Pelchat	
155	INTERMEDIATE K-FRAME	AM	Alexandru Marin	DP	David Pelchat	
156	INTERMEDIATE K-FRAME	AM	Alexandru Marin	DP	David Pelchat	
157	INTERMEDIATE K-FRAME	AM	Alexandru Marin	DP	David Pelchat	
158	INTERMEDIATE K-FRAME	AM	Alexandru Marin	DP	David Pelchat	
159	INTERMEDIATE K-FRAME	AM	Alexandru Marin	DP	David Pelchat	
160	INTERMEDIATE K-FRAME	AM	Alexandru Marin	DP	David Pelchat	
161	INTERMEDIATE K-FRAME	AM	Alexandru Marin	DP	David Pelchat	
162	INTERMEDIATE K-FRAME	AM	Alexandru Marin	DP	David Pelchat	
163	INTERMEDIATE K-FRAME	AM	Alexandru Marin	DP	David Pelchat	
164	INTERMEDIATE K-FRAME	AM	Alexandru Marin	DP	David Pelchat	
165	INTERMEDIATE K-FRAME	AM	Alexandru Marin	DP	David Pelchat	
166	INTERMEDIATE K-FRAME	AM	Alexandru Marin	DP	David Pelchat	
167	INTERMEDIATE K-FRAME	AM	Alexandru Marin	DP	David Pelchat	
168	INTERMEDIATE K-FRAME	AM	Alexandru Marin	DP	David Pelchat	
169	INTERMEDIATE K-FRAME	AM	Alexandru Marin	DP	David Pelchat	
170	GAS LINE UTILITY SUPPORT	AM	Alexandru Marin	DP	David Pelchat	1
171	CONDUIT UTILITY SUPPORT	AM	Alexandru Marin	DP	David Pelchat	1
172	LEAN ON BRACING	AM	Alexandru Marin	DP	David Pelchat	
173	LEAN ON BRACING	AM	Alexandru Marin	DP	David Pelchat	

NO.	DATE	REMARKS	BY
2	11-01-19	REVISION 1 ADDED	DP
1	08-01-19	DRAWING FA101 ADDED	EG

REVISIONS

Veritas STEEL

2-EAU CLAIRE, WI 3-WAUSAU, WI 4-PALATKA, FL

1605

STRUCTURE: CUY-010-1978R, OH-10 EASTBOUND OVER GCRTA BLUE AND GREEN LINES

LOCATION: CLEVELAND, OHIO CUYAHOGA COUNTY

PROJECT NO.: 17-3000

ENGINEER: MICHAEL BAKER INTERNATIONAL

CONTRACTOR: KOKOSING

ITEM: INDEX SHEET

SURFACE PREP.: SEE P101 OPEN HOLES: $1\frac{1}{16}$"Ø (U.N.O.)

PAINT: SEE P101

APPROVAL	DRAWN AM 05/09/19	SHEET NO.	PLANT	ORDER NO.
SHOP	CHECKED DP 06/12/19	INDEX	3	317023A

LINE	SHIP MARK	NO. OF PCS.	ASS'Y MARK	MATERIAL SHAPE	LENGTH FT.	LENGTH IN.	MATERIAL SPEC.	ITEM NO.	REMARKS
1	101A1	ONE		GIRDER					PART. PAINTED 27925
2		1	101TF	PL 1 x 20	85	5 3/8	A709-50WT2	1001	CVN 5810
3		1	101WB	PL 5/8 x 56	85	2 5/8	A709-50WT2	1007	CVN 10141
4		1	101BF1	PL 1 5/8 x 24	20	5 7/16	A709-50WT2	1177	CVN 2712
5		1	101BF2	PL 1 5/8 x 24	64	11 11/16	A709-50WT2	1013	CVN 8616
6		1	x103a	PL 1/2 x 9	4	8	A709-50WT2	1095	CVN 71
7		2	x103d	PL 1 1/8 x 9	4	8	A709-50WT2	1091	CVN MIE 321
8		4	x103g	PL 1/2 x 8	4	8	A709-50WT2	1092	CVN 254

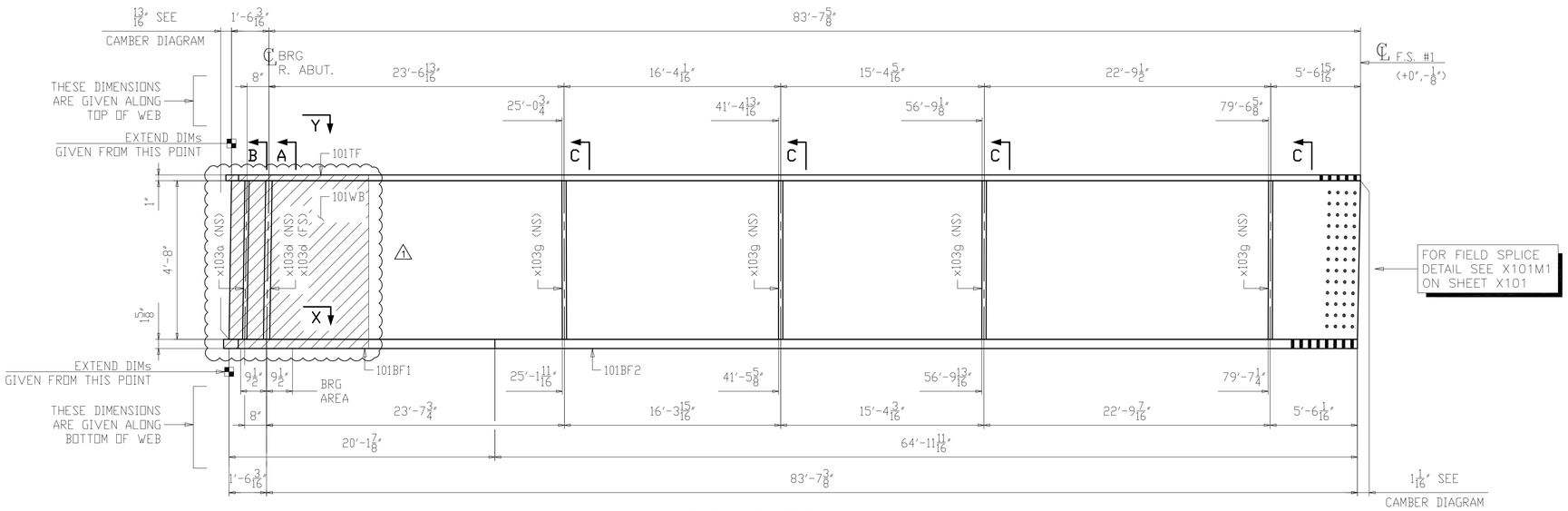

ONE ~ GIRDER ~ 101A1

(PARTIALLY PAINTED)

1. FOR GENERAL NOTES SEE SHEET GN101.
2. FOR PAINT NOTES SEE SHEET P101.
3. FOR CAMBER AND FLANGE DIAGRAM SEE SHEET BG101.
4. FOR HORIZONTAL CURVING DIAGRAMS SEE SHEET HC101.
5. FOR GIRDER STANDARD DETAILS SEE SHEET X103.
6. FOR FIELD SPLICE DETAILS SEE X101.
7. T2 - DENOTES MATERIAL SUBJECT TO CHARPY V-NOTCH TESTING (ZONE 2).
8. ALL MATERIAL A709-50WT2 (UN).
9. BRG AREA - DENOTES AREA TO BE FLAT AND TRUE TO RECEIVE SOLE PLATE.
10. ▨ - DENOTES PAINTED ZONE.

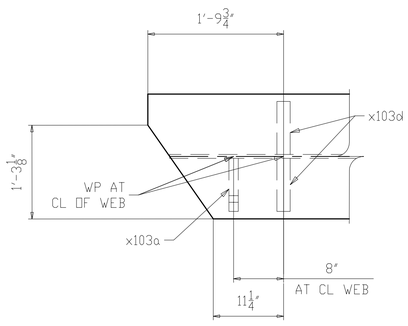

SECTION Y

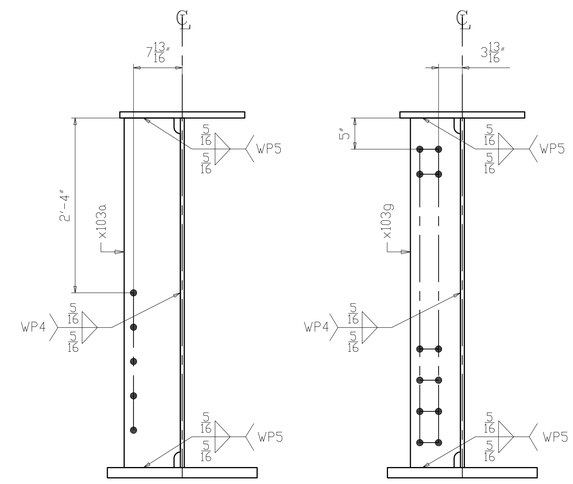

SECTION B

(REAR ABUTMENT K-FRAME)

SECTION C

(INTERMEDIATE K-FRAME)

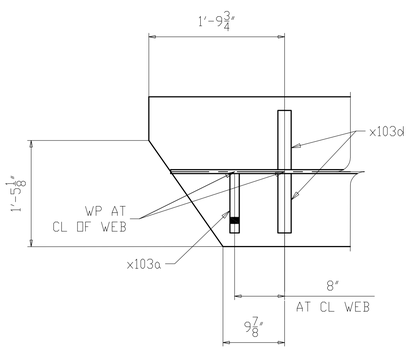

SECTION X

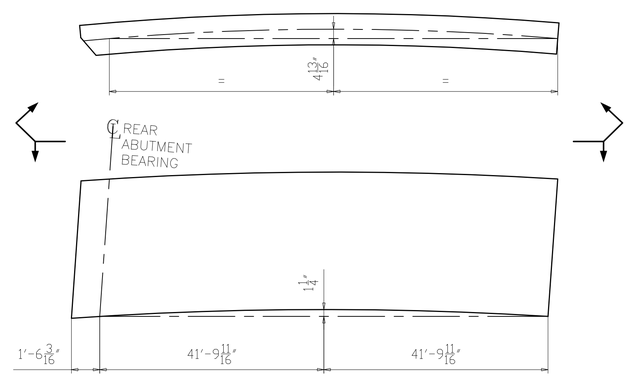

CAMBER & CURVE DIAGRAM

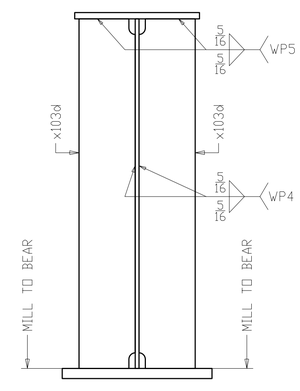

SECTION A

(BEARING REAR ABUTMENT)

NO.	DATE	REMARKS	BY
1	11/01/19	AS PER APPROVAL COMMENTS	DP

REVISIONS

Veritas STEEL

2-EAU CLAIRE, WI 3-WAUSAU, WI 4-PALATKA, FL

IAS 1605

STRUCTURE	CUY-010-1978R, OH-10 EASTBOUND OVER GCRTA BLUE AND GREEN LINES
LOCATION	CLEVELAND, OHIO CUYAHOGA COUNTY
PROJECT NO.	17-3000
ENGINEER	MICHAEL BAKER INTERNATIONAL
CONTRACTOR	KOKOSING
ITEM	GIRDER 101A1
SURFACE PREP.	SEE P101
OPEN HOLES	1 1/16"Ø (U.N.O.)
PAINT	SEE P101

APPROVAL	DRAWN AM 05/17/19	SHEET NO.	PLANT	ORDER NO.
SHOP	CHECKED DP 06/05/19	101	3	317023A-20

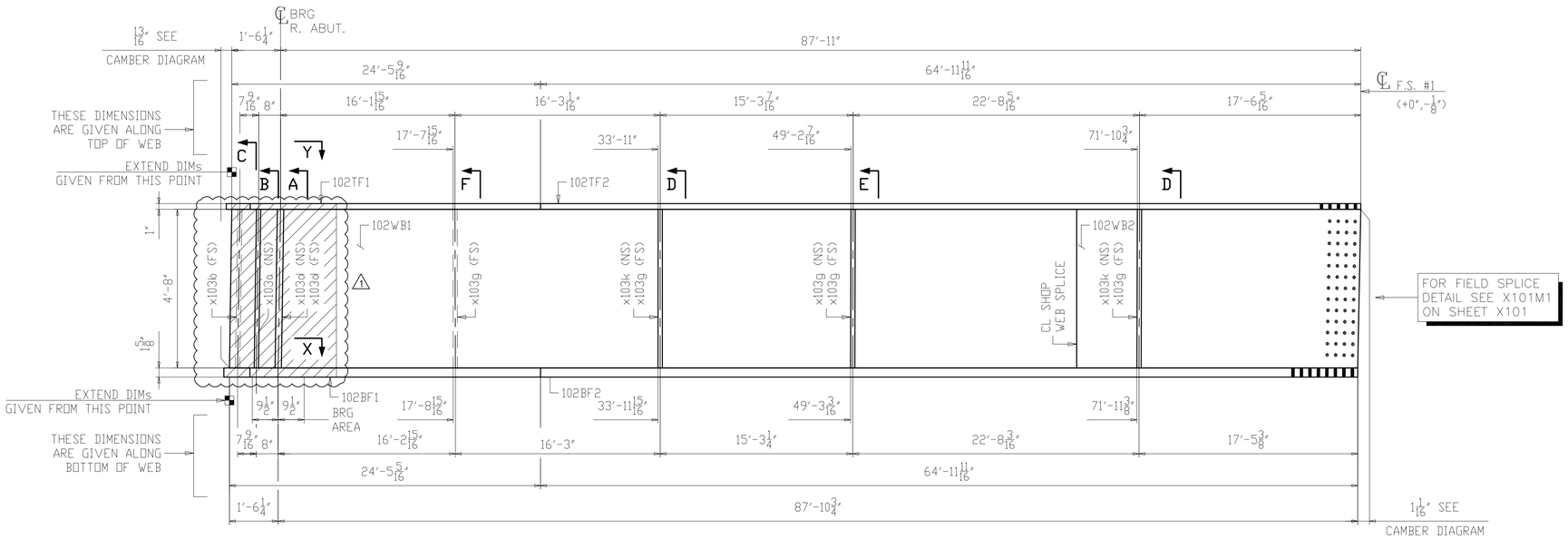

ONE ~ GIRDER ~ 102B1

(PARTIALLY PAINTED)

1. FOR GENERAL NOTES SEE SHEET GN101.
2. FOR PAINT NOTES SEE SHEET P101.
3. FOR CAMBER AND FLANGE DIAGRAM SEE SHEET BG102.
4. FOR HORIZONTAL CURVING DIAGRAMS SEE SHEET HC101.
5. FOR GIRDER STANDARD DETAILS SEE SHEET X103.
6. FOR FIELD SPLICE DETAILS SEE X101.
7. T2 - DENOTES MATERIAL SUBJECT TO CHARPY V-NOTCH TESTING (ZONE 2).
8. ALL MATERIAL A709-50WT2 (UN).
9. BRG AREA - DENOTES AREA TO BE FLAT AND TRUE TO RECEIVE SOLE PLATE.
10. - DENOTES PAINTED ZONE.

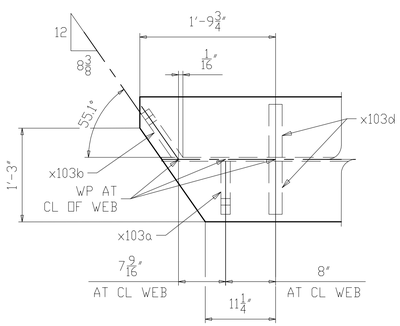

SECTION Y

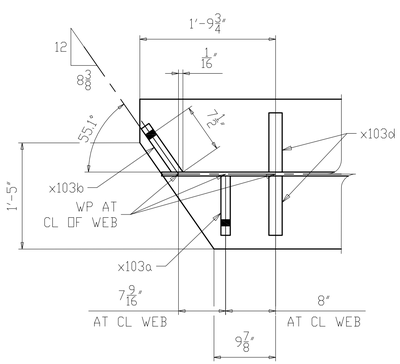

SECTION X

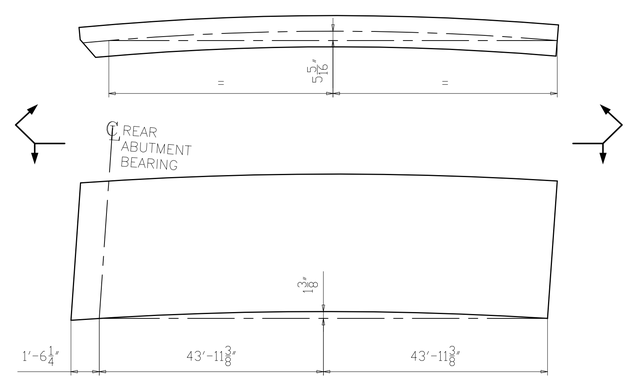

CAMBER & CURVE DIAGRAM

NO.	DATE	REMARKS	BY
1	11/01/19	AS PER APPROVAL COMMENTS	DP

REVISIONS

Veritas STEEL
2-EAU CLAIRE, WI 3-WAUSAU, WI 4-PALATKA, FL
IAS 1605

STRUCTURE	CUY-010-1978R, OH-10 EASTBOUND OVER GCRTA BLUE AND GREEN LINES
LOCATION	CLEVELAND, OHIO CUYAHOGA COUNTY
PROJECT NO.	17-3000
ENGINEER	MICHAEL BAKER INTERNATIONAL
CONTRACTOR	KOKOSING
ITEM	GIRDER 102B1
SURFACE PREP.	SEE P101
OPEN HOLES	1 1/16"Ø (U.N.O.)
PAINT	SEE P101

APPROVAL	DRAWN AM 06/05/19	SHEET NO.	PLANT	ORDER NO.
SHOP	CHECKED DP 06/20/19	102AB	3	317023A-20

LINE	SHIP MARK	NO. OF PCS.	ASS'Y MARK	MATERIAL					
				SHAPE	LENGTH FT.	LENGTH IN.	MATERIAL SPEC.	ITEM NO.	REMARKS
1	102B1	ONE		GIRDER					PART. PAINTED 29555
2		1	102TF1	PL 1 x 20	24	9 1/16	A709-50WT2	1167	CVN 1683
3		1	102TF2	PL 1 x 20	64	11 11/16	A709-50WT2	1002	CVN 4418
4		1	102WB1	PL 5/8 x 56	67	0	A709-50WT2	1008	CVN 7973
5		1	102WB2	PL 5/8 x 56	22	6 1/16	A709-50WT2	1172	CVN 2678
6		1	102BF1	PL 1 5/8 x 24	24	8 13/16	A709-50WT2	1178	CVN 3280
7		1	102BF2	PL 1 5/8 x 24	64	11 11/16	A709-50WT2	1014	CVN 8616
8		1	x103a	PL 1/2 x 9	4	8	A709-50WT2	1095	CVN 71
9		1	x103b	PL 1/2 x 9	4	8	A709-50WT2	1095	CVN 71
10		2	x103d	PL 1 1/8 x 9	4	8	A709-50WT2	1091	CVN M1E 321
11		5	x103g	PL 1/2 x 8	4	8	A709-50WT2	1092	CVN 317
12		2	x103k	PL 1/2 x 8	4	8	A709-50WT2	1094	CVN 127

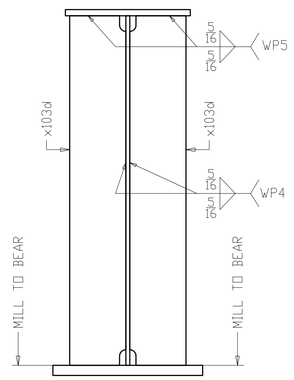

SECTION A
(BEARING REAR ABUTMENT)

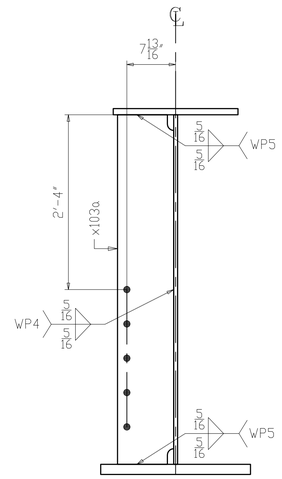

SECTION B
(REAR ABUTMENT K-FRAME)

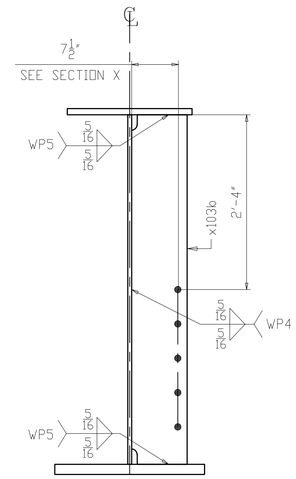

SECTION C
(REAR ABUTMENT K-FRAME)

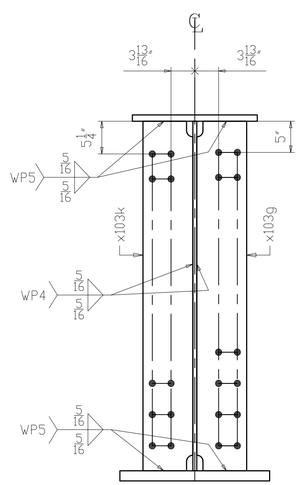

SECTION D
(INTERMEDIATE K-FRAME
& LEAN ON BRACING)

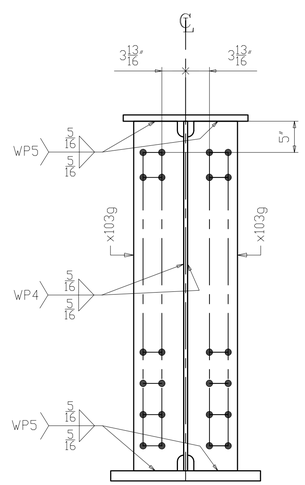

SECTION E
(INTERMEDIATE K-FRAME)

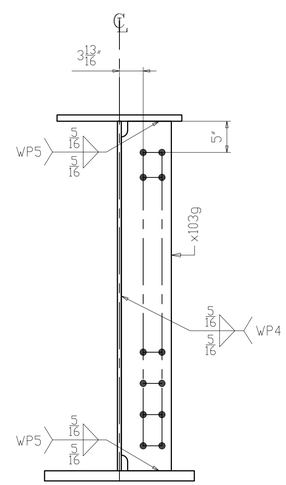

SECTION F
(INTERMEDIATE K-FRAME)

NO.	DATE	REMARKS	BY

REVISIONS

Veritas STEEL
2-EAU CLAIRE, WI 3-WAUSAU, WI 4-PALATKA, FL
TENCA 1605

STRUCTURE: CUY-010-1978R, OH-10 EASTBOUND OVER GCRTA BLUE AND GREEN LINES
LOCATION: CLEVELAND, OHIO CUYAHOGA COUNTY
PROJECT NO.: 17-3000
ENGINEER: MICHAEL BAKER INTERNATIONAL
CONTRACTOR: KOKOSING

ITEM: GIRDER 102B1
SURFACE PREP.: SEE P101 OPEN HOLES: 1 1/16"ø (U.N.O.)
PAINT: SEE P101

APPROVAL	DRAWN AM 06/05/19	SHEET NO.	PLANT	ORDER NO.
SHOP	CHECKED DP 06/20/19	102B	3	317023A-20

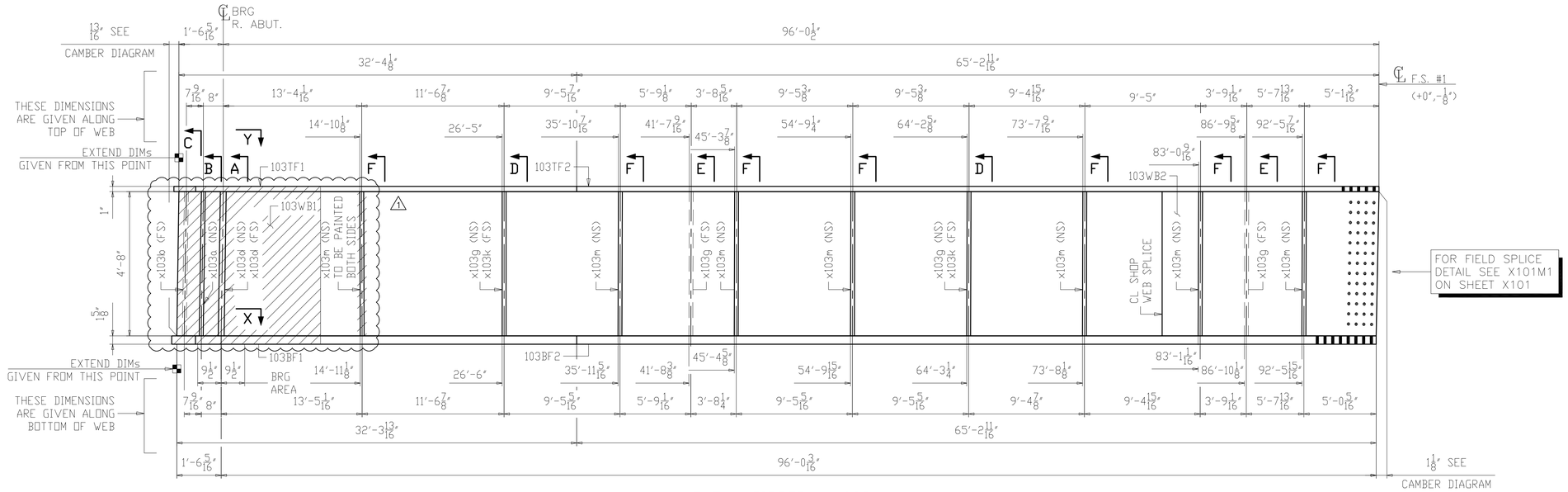

ONE ~ GIRDER ~ 103C1

(PARTIALLY PAINTED)

1. FOR GENERAL NOTES SEE SHEET GN101.
2. FOR PAINT NOTES SEE SHEET P101.
3. FOR CAMBER AND FLANGE DIAGRAM SEE SHEET BG103.
4. FOR HORIZONTAL CURVING DIAGRAMS SEE SHEET HC101.
5. FOR GIRDER STANDARD DETAILS SEE SHEET X103.
6. FOR FIELD SPLICE DETAILS SEE X101.
7. T2 - DENOTES MATERIAL SUBJECT TO CHARPY V-NOTCH TESTING (ZONE 2).
8. ALL MATERIAL A709-50WT2 (UN).
9. BRG AREA - DENOTES AREA TO BE FLAT AND TRUE TO RECEIVE SOLE PLATE.
10. ▨ - DENOTES PAINTED ZONE. (1)

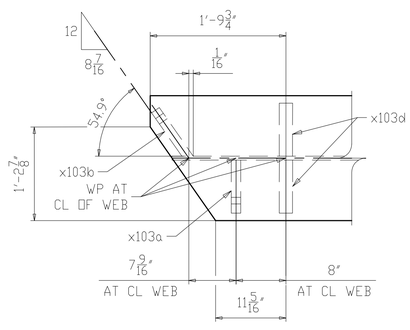

SECTION Y

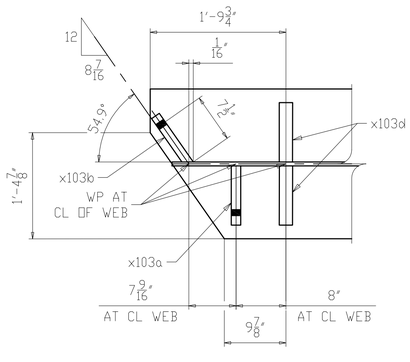

SECTION X

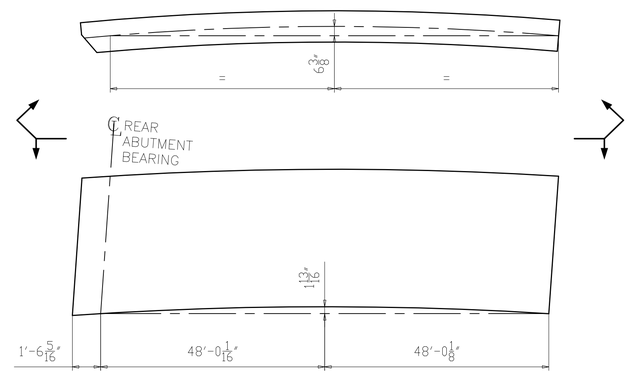

CAMBER & CURVE DIAGRAM

NO.	DATE	REMARKS	BY
1	11/01/19	AS PER APPROVAL COMMENTS	DP

REVISIONS

Veritas STEEL
2-EAU CLAIRE, WI 3-WAUSAU, WI 4-PALATKA, FL
IAS 1605

STRUCTURE	CUY-010-1978R, OH-10 EASTBOUND OVER GCRTA BLUE AND GREEN LINES
LOCATION	CLEVELAND, OHIO CUYAHOGA COUNTY
PROJECT NO.	17-3000
ENGINEER	MICHAEL BAKER INTERNATIONAL
CONTRACTOR	KOKOSING
ITEM	GIRDER 103C1
SURFACE PREP.	SEE P101
OPEN HOLES	1 1/16"Ø (U.N.O.)
PAINT	SEE P101

APPROVAL	DRAWN AM 06/05/19	SHEET NO.	PLANT	ORDER NO.
SHOP	CHECKED DP 06/20/19	103AB	3	317023A-20

LINE	SHIP MARK	NO. OF PCS.	ASS'Y MARK	MATERIAL SHAPE	LENGTH FT.	LENGTH IN.	MATERIAL SPEC.	ITEM NO.	REMARKS
1	103C1	ONE		GIRDER					PART. PAINTED 32533
2		1	103TF1	PL 1 x 20	32	7 9/16	A709-50WT2	1168	CVN 2219
3		1	103TF2	PL 1 x 20	65	2 11/16	A709-50WT2	1003	CVN 4435
4		1	103WB1	PL 5/8 x 56	80	0	A709-50WT2	1009	CVN 9520
5		1	103WB2	PL 5/8 x 56	17	7 5/8	A709-50WT2	1173	CVN 2099
6		1	103BF1	PL 1 5/8 x 24	32	7 1/4	A709-50WT2	1179	CVN 4323
7		1	103BF2	PL 1 5/8 x 24	65	2 11/16	A709-50WT2	1015	CVN 8649
8		1	x103a	PL 1/2 x 9	4	8	A709-50WT2	1095	CVN 71
9		1	x103b	PL 1/2 x 9	4	8	A709-50WT2	1095	CVN 71
10		2	x103d	PL 1 1/8 x 9	4	8	A709-50WT2	1091	CVN M1E 321
11		4	x103g	PL 1/2 x 8	4	8	A709-50WT2	1092	CVN 254
12		2	x103k	PL 1/2 x 8	4	8	A709-50WT2	1094	CVN 127
13		7	x103m	PL 1/2 x 8	4	8	A709-50WT2	1093	CVN 444

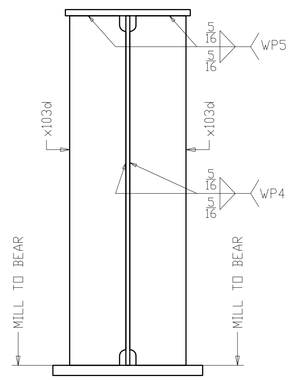

SECTION A
(BEARING REAR ABUTMENT)

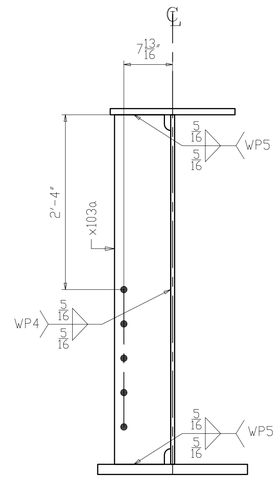

SECTION B
(REAR ABUTMENT K-FRAME)

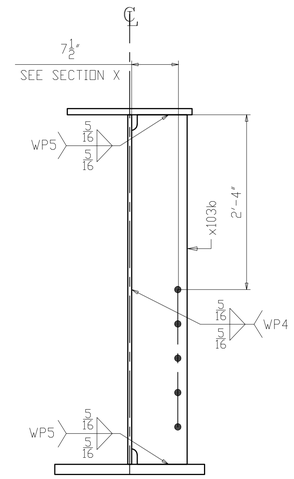

SECTION C
(REAR ABUTMENT K-FRAME)

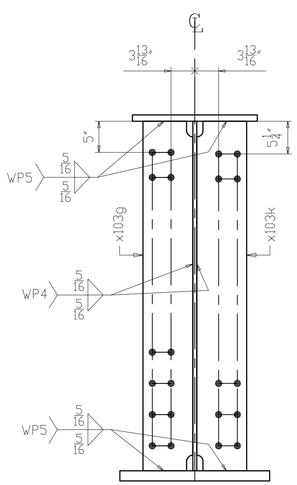

SECTION D
(INTERMEDIATE K-FRAME
& LEAN ON BRACING)

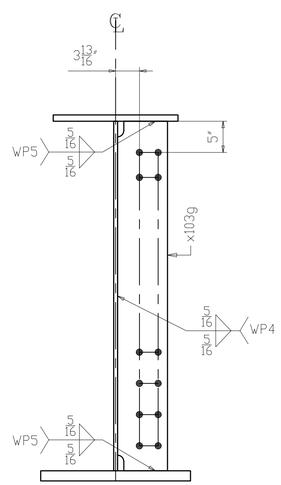

SECTION E
(INTERMEDIATE K-FRAME)

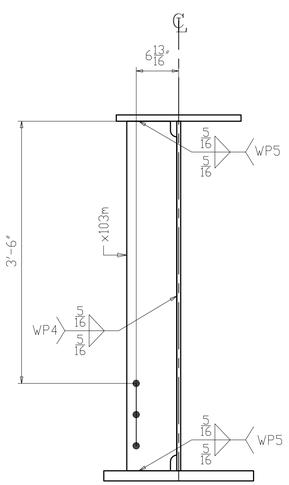

SECTION F
(UTILITY SUPPORT)

NO.	DATE	REMARKS	BY

REVISIONS

Veritas STEEL
2-EAU CLAIRE, WI 3-WAUSAU, WI 4-PALATKA, FL
TENCA 1605

STRUCTURE: CUY-010-1978R, OH-10 EASTBOUND OVER GCRTA BLUE AND GREEN LINES
LOCATION: CLEVELAND, OHIO CUYAHOGA COUNTY
PROJECT NO.: 17-3000
ENGINEER: MICHAEL BAKER INTERNATIONAL
CONTRACTOR: KOKOSING

ITEM: GIRDER 103C1
SURFACE PREP.: SEE P101 OPEN HOLES: 1 1/16"ø (U.N.O.)
PAINT: SEE P101

APPROVAL	DRAWN AM 06/05/19	SHEET NO.	PLANT	ORDER NO.
SHOP	CHECKED DP 06/20/19	103B	3	317023A-20

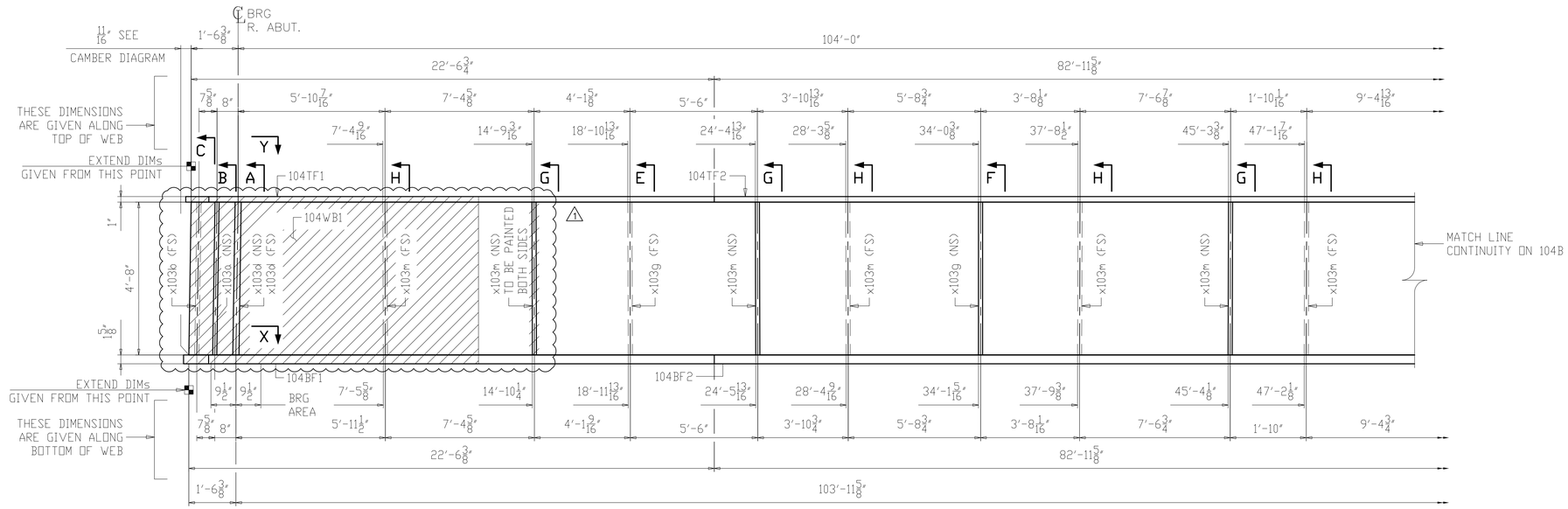

ONE ~ GIRDER ~ 104D1

(PARTIALLY PAINTED)

1. FOR GENERAL NOTES SEE SHEET GN101.
2. FOR PAINT NOTES SEE SHEET P101.
3. FOR CAMBER AND FLANGE DIAGRAM SEE SHEET BG104.
4. FOR HORIZONTAL CURVING DIAGRAMS SEE SHEET HC101.
5. FOR GIRDER STANDARD DETAILS SEE SHEET X103.
6. FOR FIELD SPLICE DETAILS SEE X101.
7. T2 - DENOTES MATERIAL SUBJECT TO CHARPY V-NOTCH TESTING (ZONE 2).
8. ALL MATERIAL A709-50WT2 (UN).
9. BRG AREA - DENOTES AREA TO BE FLAT AND TRUE TO RECEIVE SOLE PLATE.
10. - DENOTES PAINTED ZONE.

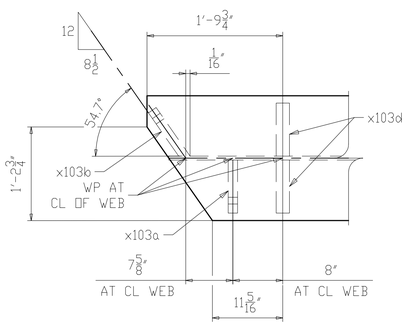

SECTION Y

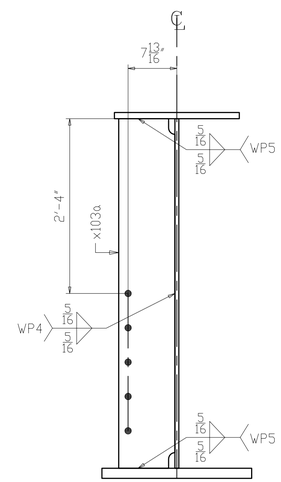

SECTION B

(REAR ABUTMENT K-FRAME)

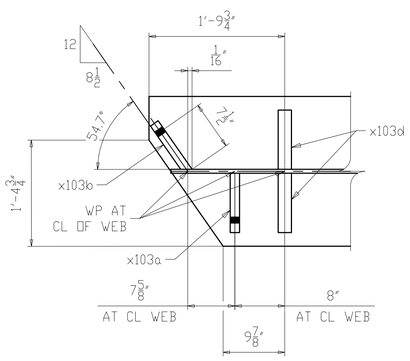

SECTION X

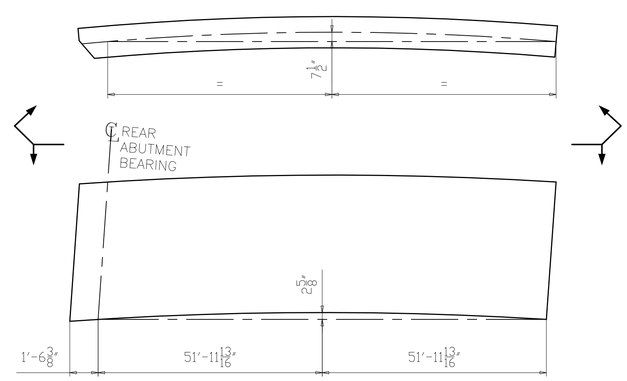

CAMBER & CURVE DIAGRAM

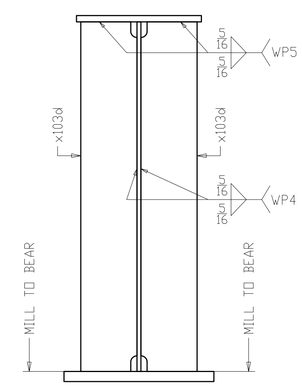

SECTION A

(BEARING REAR ABUTMENT)

NO.	DATE	REMARKS	BY
1	11/01/19	AS PER APPROVAL COMMENTS	DP

REVISIONS

Veritas STEEL

2-EAU CLAIRE, WI 3-WAUSAU, WI 4-PALATKA, FL

TENCA 1605

STRUCTURE	CUY-010-1978R, OH-10 EASTBOUND OVER GCRTA BLUE AND GREEN LINES
LOCATION	CLEVELAND, OHIO CUYAHOGA COUNTY
PROJECT NO.	17-3000
ENGINEER	MICHAEL BAKER INTERNATIONAL
CONTRACTOR	KOKOSING
ITEM	GIRDER 104D1
SURFACE PREP.	SEE P101
OPEN HOLES	1 1/16"Ø (U.N.O.)
PAINT	SEE P101

APPROVAL	DRAWN AM 06/05/19	SHEET NO.	PLANT	ORDER NO.
SHOP	CHECKED DP 06/20/19	104AB	3	317023A-20

LINE	SHIP MARK	NO. OF PCS.	ASS'Y MARK	MATERIAL SHAPE	LENGTH FT.	LENGTH IN.	MATERIAL SPEC.	ITEM NO.	REMARKS
1	104D1	ONE		GIRDER					PART. PAINTED 35519
2		1	104TF1	PL 1 x 20	22	10 1/8	A709-50WT2	1169	CVN 1553
3		1	104TF2	PL 1 x 20	82	11 5/8	A709-50WT2	1004	CVN 5642
4		1	104WB1	PL 5/8 x 56	80	2	A709-50WT2	1010	CVN 9540
5		1	104WB2	PL 5/8 x 56	25	5 1/16	A709-50WT2	1174	CVN 3025
6		1	104BF1	PL 1 5/8 x 24	22	9 3/4	A709-50WT2	1180	CVN 3025
7		1	104BF2	PL 1 5/8 x 24	82	11 5/8	A709-50WT2	1016	CVN 11002
8		1	x103a	PL 1/2 x 9	4	8	A709-50WT2	1095	CVN 71
9		1	x103b	PL 1/2 x 9	4	8	A709-50WT2	1095	CVN 71
10		2	x103d	PL 1 1/8 x 9	4	8	A709-50WT2	1091	CVN MIE 321
11		5	x103g	PL 1/2 x 8	4	8	A709-50WT2	1092	CVN 317
12		1	x103k	PL 1/2 x 8	4	8	A709-50WT2	1094	CVN 63
13		14	x103m	PL 1/2 x 8	4	8	A709-50WT2	1093	CVN 889

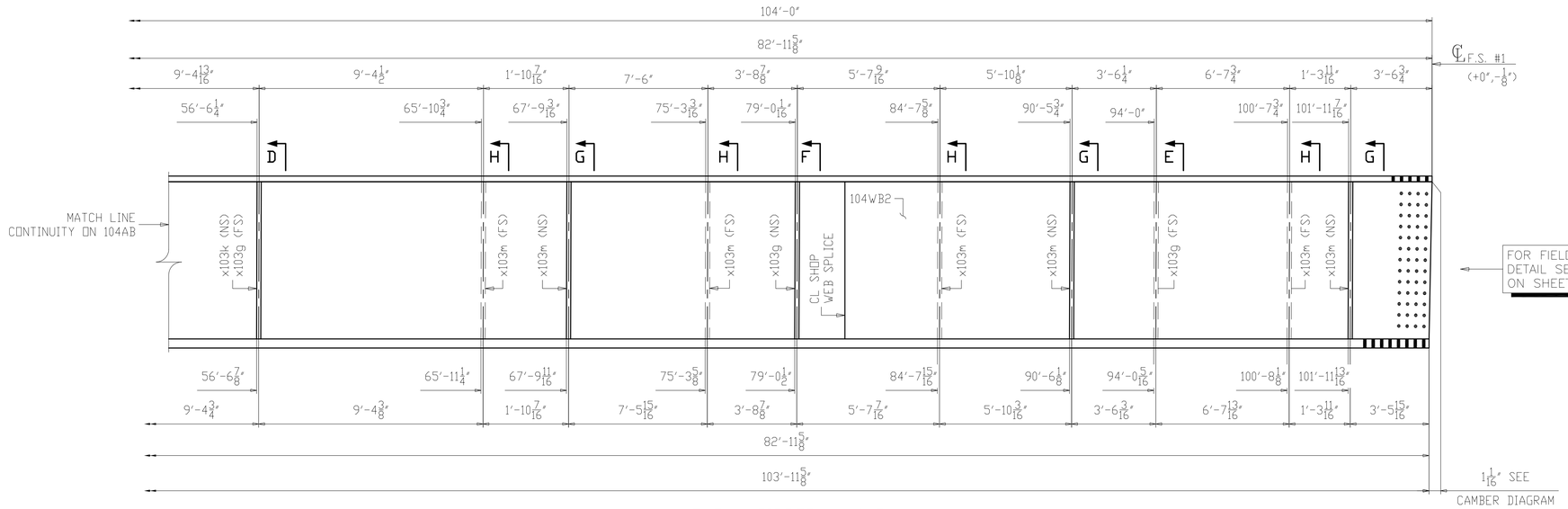

ONE ~ GIRDER ~ 104D1

(PARTIALLY PAINTED)
(CONTINUATION)

1. FOR GENERAL NOTES SEE SHEET GN101.
2. FOR PAINT NOTES SEE SHEET P101.
3. FOR CAMBER AND FLANGE DIAGRAM SEE SHEET BG104.
4. FOR HORIZONTAL CURVING DIAGRAMS SEE SHEET HC101.
5. FOR GIRDER STANDARD DETAILS SEE SHEET X103.
6. FOR FIELD SPLICE DETAILS SEE X101.
7. T2 - DENOTES MATERIAL SUBJECT TO CHARPY V-NOTCH TESTING (ZONE 2).
8. ALL MATERIAL A709-50WT2 (UN).
9. BRG AREA - DENOTES AREA TO BE FLAT AND TRUE TO RECEIVE SOLE PLATE.

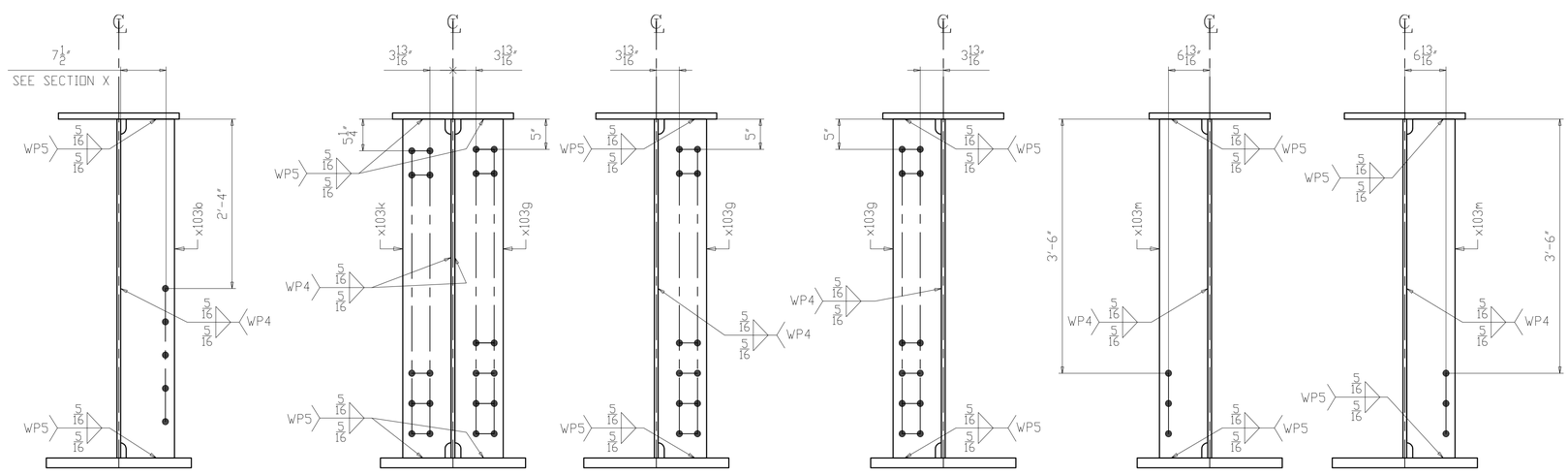

SECTION C (REAR ABUTMENT K-FRAME)

SECTION D (INTERMEDIATE K-FRAME & LEAN ON BRACING)

SECTION E (INTERMEDIATE K-FRAME)

SECTION F (INTERMEDIATE K-FRAME)

SECTION G (UTILITY SUPPORT)

SECTION H (UTILITY SUPPORT)

NO.	DATE	REMARKS	BY

REVISIONS

Veritas STEEL
2-EAU CLAIRE, WI 3-WAUSAU, WI 4-PALATKA, FL
TENCA 1605

STRUCTURE: CUY-010-1978R, OH-10 EASTBOUND OVER GCRTA BLUE AND GREEN LINES
LOCATION: CLEVELAND, OHIO CUYAHOGA COUNTY
PROJECT NO.: 17-3000
ENGINEER: MICHAEL BAKER INTERNATIONAL
CONTRACTOR: KOKOSING

ITEM: GIRDER 104D1
SURFACE PREP.: SEE P101 OPEN HOLES: 1 1/16"Ø (U.N.O.)
PAINT: SEE P101

APPROVAL	DRAWN AM 06/05/19	SHEET NO.	PLANT	ORDER NO.
SHOP	CHECKED DP 06/20/19	104B	3	317023A-20

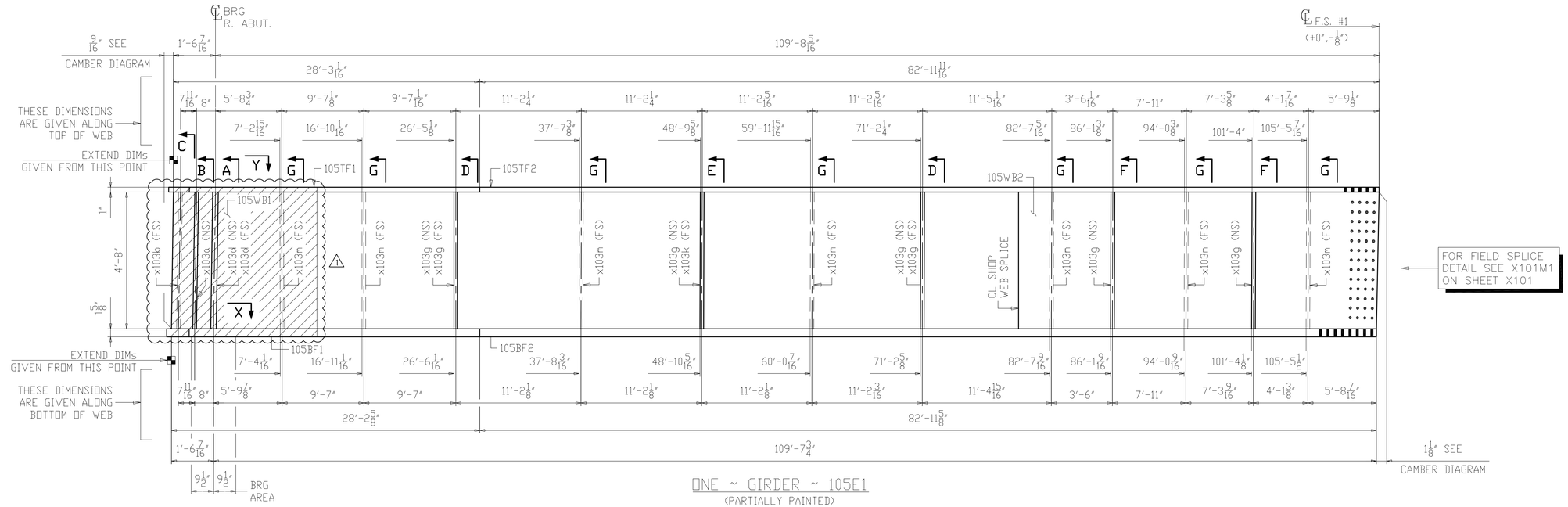

ONE ~ GIRDER ~ 105E1

(PARTIALLY PAINTED)

1. FOR GENERAL NOTES SEE SHEET GN101.
2. FOR PAINT NOTES SEE SHEET P101.
3. FOR CAMBER AND FLANGE DIAGRAM SEE SHEET BG105.
4. FOR HORIZONTAL CURVING DIAGRAMS SEE SHEET HC101.
5. FOR GIRDER STANDARD DETAILS SEE SHEET X103.
6. FOR FIELD SPLICE DETAILS SEE X101.
7. T2 - DENOTES MATERIAL SUBJECT TO CHARPY V-NOTCH TESTING (ZONE 2).
8. ALL MATERIAL A709-50WT2 (UN).
9. BRG AREA - DENOTES AREA TO BE FLAT AND TRUE TO RECEIVE SOLE PLATE.
10. ▨ - DENOTES PAINTED ZONE.

△1

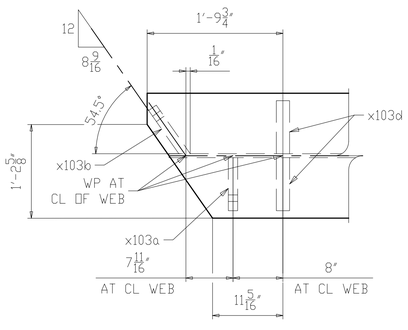

SECTION Y

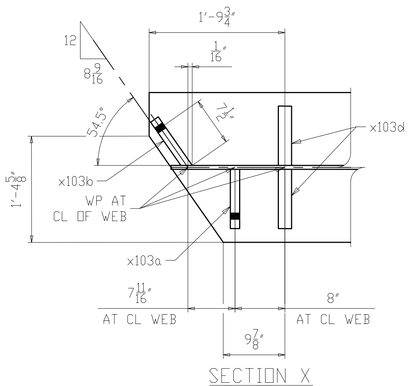

SECTION X

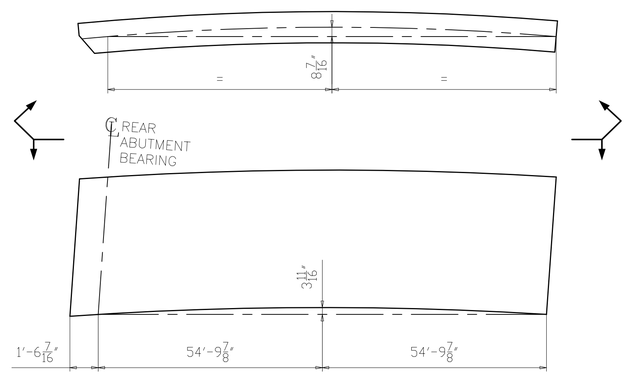

CAMBER & CURVE DIAGRAM

NO.	DATE	REMARKS	BY
1	11/01/19	AS PER APPROVAL COMMENTS	DP

REVISIONS

Veritas STEEL
2-EAU CLAIRE, WI 3-WAUSAU, WI 4-PALATKA, FL
TENCA 1605

STRUCTURE	CUY-010-1978R, OH-10 EASTBOUND OVER GCRTA BLUE AND GREEN LINES
LOCATION	CLEVELAND, OHIO CUYAHOGA COUNTY
PROJECT NO.	17-3000
ENGINEER	MICHAEL BAKER INTERNATIONAL
CONTRACTOR	KOKOSING
ITEM	GIRDER 105E1
SURFACE PREP.	SEE P101 OPEN HOLES 1 1/16"Ø (U.N.O.)
PAINT	SEE P101

APPROVAL	DRAWN AM 06/05/19	SHEET NO.	PLANT	ORDER NO.
SHOP	CHECKED DP 06/20/19	105AB	3	317023A-20

LINE	SHIP MARK	NO. OF PCS.	ASS'Y MARK	MATERIAL SHAPE	LENGTH FT.	LENGTH IN.	MATERIAL SPEC.	ITEM NO.	REMARKS
1	105E1	ONE		GIRDER					PART. PAINTED 37018
2		1	105TF1	PL 1 x 20	28	6 3/8	A709-50WT2	1170	CVN 1940
3		1	105TF2	PL 1 x 20	82	11 11/16	A709-50WT2	1005	CVN 5642
4		1	105WB1	PL 5/8 x 56	80	0	A709-50WT2	1011	CVN 9520
5		1	105WB2	PL 5/8 x 56	31	3 5/16	A709-50WT2	1175	CVN 3722
6		1	105BF1	PL 1 5/8 x 24	28	5 7/8	A709-50WT2	1181	CVN 3778
7		1	105BF2	PL 1 5/8 x 24	82	11 5/8	A709-50WT2	1017	CVN 11002
8		1	x103a	PL 1/2 x 9	4	8	A709-50WT2	1095	CVN 71
9		1	x103b	PL 1/2 x 9	4	8	A709-50WT2	1095	CVN 71
10		2	x103d	PL 1 1/8 x 9	4	8	A709-50WT2	1091	CVN M1E 321
11		7	x103g	PL 1/2 x 8	4	8	A709-50WT2	1092	CVN 444
12		1	x103k	PL 1/2 x 8	4	8	A709-50WT2	1094	CVN 63
13		7	x103m	PL 1/2 x 8	4	8	A709-50WT2	1093	CVN 444

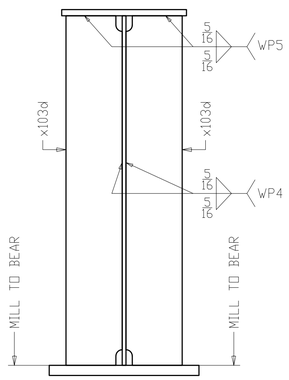

SECTION A
(BEARING REAR ABUTMENT)

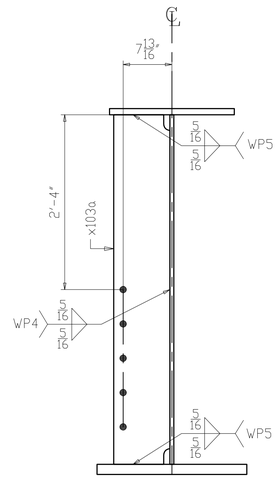

SECTION B
(REAR ABUTMENT K-FRAME)

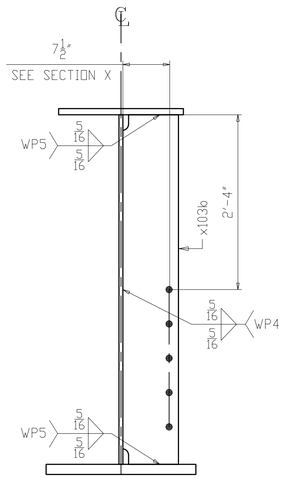

SECTION C
(REAR ABUTMENT K-FRAME)

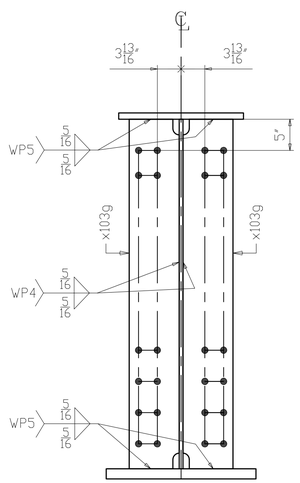

SECTION D
(INTERMEDIATE K-FRAME)

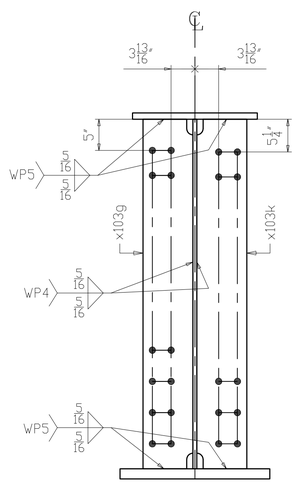

SECTION E
(INTERMEDIATE K-FRAME
& LEAN ON BRACING)

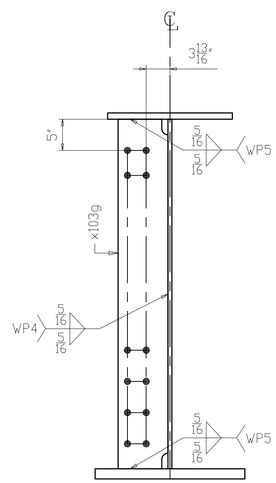

SECTION F
(INTERMEDIATE K-FRAME)

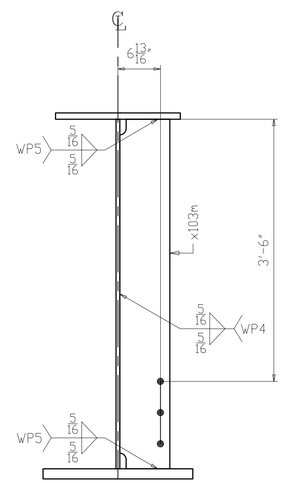

SECTION G
(UTILITY SUPPORT)

NO.	DATE	REMARKS	BY

REVISIONS

Veritas STEEL
2-EAU CLAIRE, WI 3-WAUSAU, WI 4-PALATKA, FL
TENCA 1605

STRUCTURE: CUY-010-1978R, OH-10 EASTBOUND OVER GCRTA BLUE AND GREEN LINES
LOCATION: CLEVELAND, OHIO CUYAHOGA COUNTY
PROJECT NO.: 17-3000
ENGINEER: MICHAEL BAKER INTERNATIONAL
CONTRACTOR: KOKOSING

ITEM: GIRDER 105E1
SURFACE PREP.: SEE P101 OPEN HOLES: 1 1/16"ø (U.N.O.)
PAINT: SEE P101

APPROVAL	DRAWN AM 06/05/19	SHEET NO.	PLANT	ORDER NO.
SHOP	CHECKED DP 06/20/19	105B	3	317023A-20

LINE	SHIP MARK	NO. OF PCS.	ASS'Y MARK	MATERIAL SHAPE	LENGTH FT.	LENGTH IN.	MATERIAL SPEC.	ITEM NO.	REMARKS
1	106F1	ONE		GIRDER					PART. PAINTED 40725
2		1	106TF1	PL 1 x 20	83	8 11/16	A709-50WT2	1006	CVN 5693
3		1	106TF2	PL 1 x 20	41	4 13/16	A709-50WT2	1171	CVN 2815
4		1	106WB1	PL 5/8 x 56	44	10 9/16	A709-50WT2	1176	CVN 5341
5		1	106WB2	PL 5/8 x 56	80	0	A709-50WT2	1012	CVN 9520
6		1	106BF1	PL 1 5/8 x 24	83	8	A709-50WT2	1018	CVN 11094
7		1	106BF2	PL 1 5/8 x 24	41	4 3/4	A709-50WT2	1182	CVN 5489
8		1	x103b	PL 1/2 x 9	4	8	A709-50WT2	1095	CVN 71
9		2	x103d	PL 1 1/8 x 9	4	8	A709-50WT2	1091	CVN MIE 321
10		6	x103g	PL 1/2 x 8	4	8	A709-50WT2	1092	CVN 381

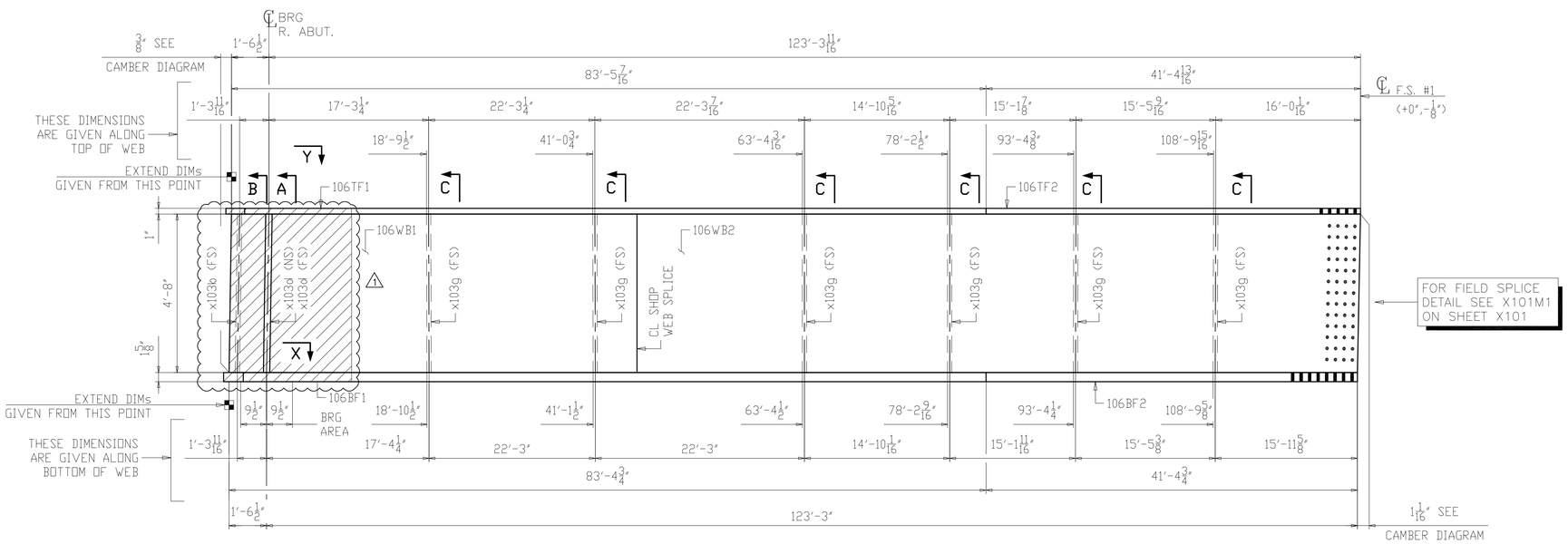

ONE ~ GIRDER ~ 106F1

(PARTIALLY PAINTED)

1. FOR GENERAL NOTES SEE SHEET GN101.
2. FOR PAINT NOTES SEE SHEET P101.
3. FOR CAMBER AND FLANGE DIAGRAM SEE SHEET BG106.
4. FOR HORIZONTAL CURVING DIAGRAMS SEE SHEET HC101.
5. FOR GIRDER STANDARD DETAILS SEE SHEET X103.
6. FOR FIELD SPLICE DETAILS SEE X101.
7. T2 - DENOTES MATERIAL SUBJECT TO CHARPY V-NOTCH TESTING (ZONE 2).
8. ALL MATERIAL A709-50WT2 (UN).
9. BRG AREA - DENOTES AREA TO BE FLAT AND TRUE TO RECEIVE SOLE PLATE.
10. - DENOTES PAINTED ZONE.

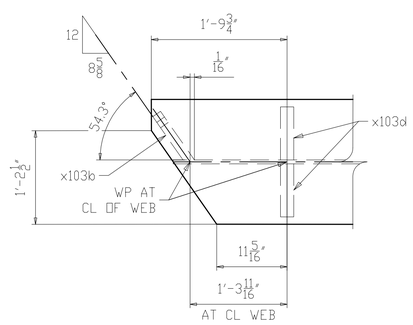

SECTION Y

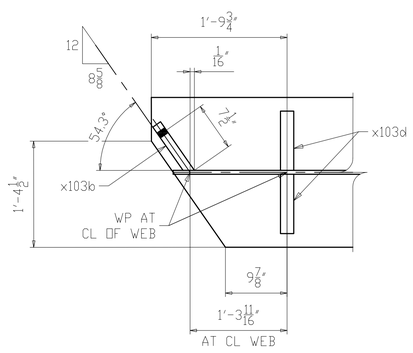

SECTION X

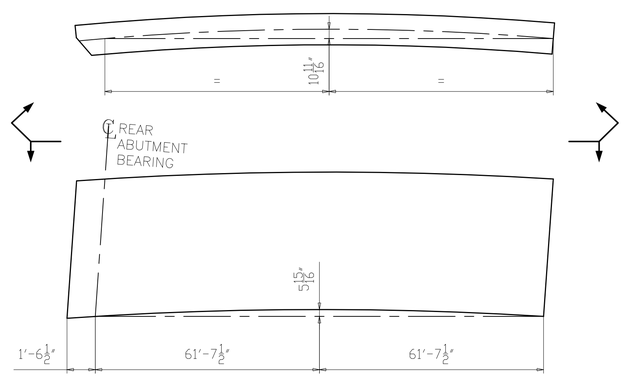

CAMBER & CURVE DIAGRAM

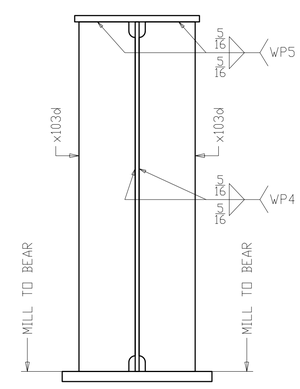

SECTION A

(BEARING REAR ABUTMENT)

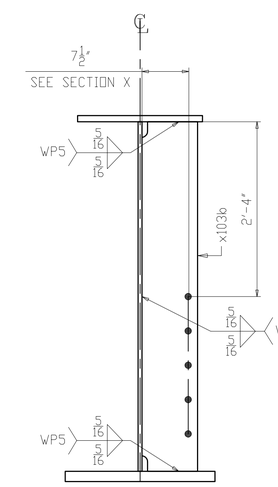

SECTION B

(REAR ABUTMENT K-FRAME)

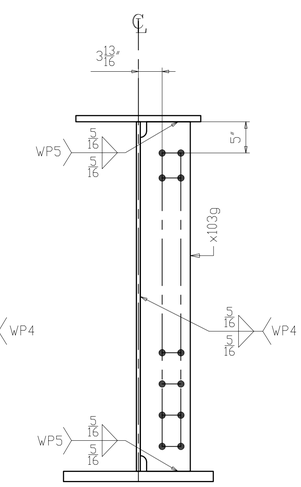

SECTION C

(INTERMEDIATE K-FRAME)

NO.	DATE	REMARKS	BY
1	11/01/19	AS PER APPROVAL COMMENTS	DP

REVISIONS

Veritas STEEL
2-EAU CLAIRE, WI 3-WAUSAU, WI 4-PALATKA, FL
IAS NDT 1605

STRUCTURE: CUY-010-1978R, OH-10 EASTBOUND OVER GCRTA BLUE AND GREEN LINES
LOCATION: CLEVELAND, OHIO CUYAHOGA COUNTY
PROJECT NO.: 17-3000
ENGINEER: MICHAEL BAKER INTERNATIONAL
CONTRACTOR: KOKOSING

ITEM: GIRDER 106F1
SURFACE PREP.: SEE P101 OPEN HOLES: 1 1/16"Ø (U.N.O.)
PAINT: SEE P101

APPROVAL	DRAWN AM 06/05/19	SHEET NO.	PLANT	ORDER NO.
SHOP	CHECKED DP 06/20/19	106	3	317023A-20

LINE	SHIP MARK	NO. OF PCS.	ASS'Y MARK	MATERIAL SHAPE	LENGTH FT.	LENGTH IN.	MATERIAL SPEC.	ITEM NO.	REMARKS	
1	107A2	ONE		GIRDER						33317
2		1	107TF	PL 2 1/2 x 28	54	1 11/16	A709-50WT2	1019	CVN	12885
3		1	107WB	PL 5/8 x 56	54	2 3/4	A709-50WT2	1025	CVN	6453
4		1	107BF	PL 2 5/8 x 28	54	1 11/16	A709-50WT2	1031	CVN	13530
5		1	x103d	PL 1 1/8 x 9	4	8	A709-50WT2	1091	CVN MIE	161
6		1	x103f	PL 1 1/8 x 9	4	8	A709-50WT2	1091	CVN MIE	161
7		2	x103g	PL 1/2 x 8	4	8	A709-50WT2	1092	CVN	127

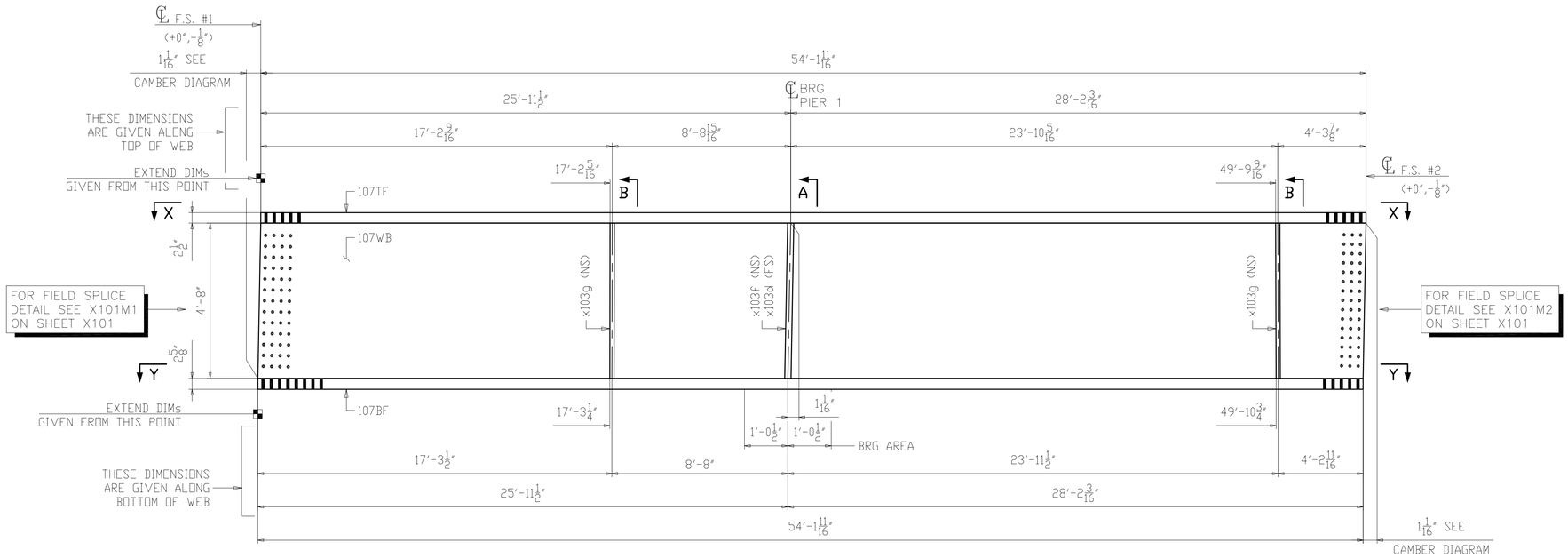

ONE ~ GIRDER ~ 107A2

1. FOR GENERAL NOTES SEE SHEET GN101.
2. FOR CAMBER AND FLANGE DIAGRAM SEE SHEET BG107.
3. FOR HORIZONTAL CURVING DIAGRAMS SEE SHEET HC102.
4. FOR GIRDER STANDARD DETAILS SEE SHEET X103.
5. FOR FIELD SPLICE DETAILS SEE X101.
6. T2 - DENOTES MATERIAL SUBJECT TO CHARPY V-NOTCH TESTING (ZONE 2).
7. ALL MATERIAL A709-50WT2 (UN).
8. BRG AREA - DENOTES AREA TO BE FLAT AND TRUE TO RECEIVE SOLE PLATE.

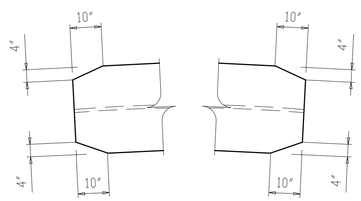

SECTION X-X

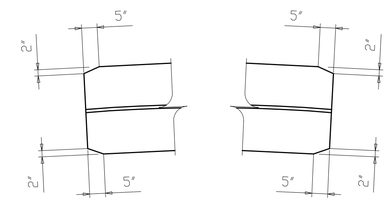

SECTION Y-Y

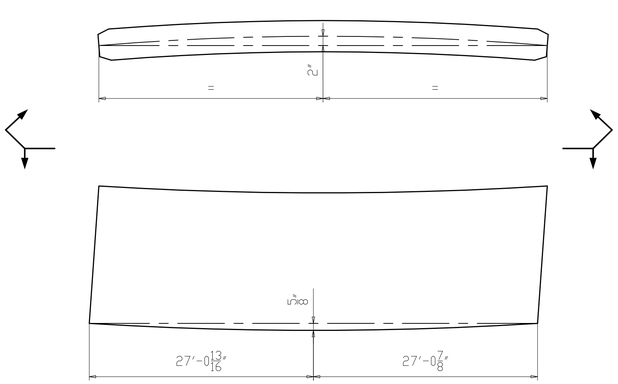

CAMBER & CURVE DIAGRAM

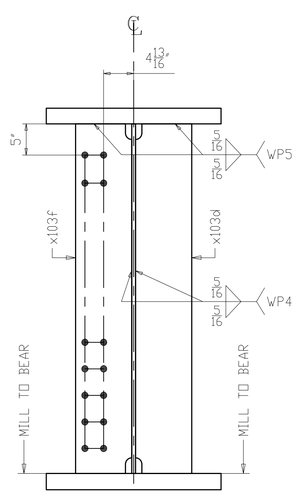

SECTION A
(K-FRAME PIER 1)

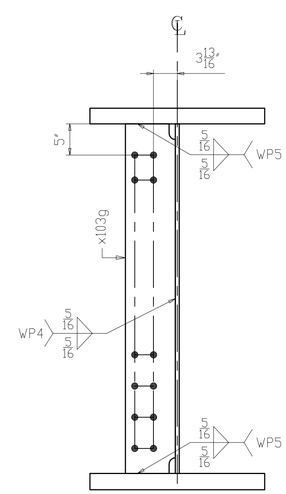

SECTION B
(INTERMEDIATE K-FRAME)

NO.	DATE	REMARKS	BY
△			

REVISIONS

Veritas STEEL
2-EAU CLAIRE, WI 3-WAUSAU, WI 4-PALATKA, FL
IENCA 1605

STRUCTURE: CUY-010-1978R, OH-10 EASTBOUND OVER GCRTA BLUE AND GREEN LINES
LOCATION: CLEVELAND, OHIO CUYAHOGA COUNTY
PROJECT NO.: 17-3000
ENGINEER: MICHAEL BAKER INTERNATIONAL
CONTRACTOR: KOKOSING

ITEM: GIRDER 107A2
SURFACE PREP.: SEE P101 OPEN HOLES: 1 1/16"Ø (U.N.O.)
PAINT: SEE P101

APPROVAL	DRAWN AM 05/17/19	SHEET NO.	PLANT	ORDER NO.
SHOP	CHECKED DP 06/05/19	107	3	317023A-20

LINE	SHIP MARK	NO. OF PCS.	ASS'Y MARK	MATERIAL SHAPE	LENGTH FT.	LENGTH IN.	MATERIAL SPEC.	ITEM NO.	REMARKS	
1	108B2	ONE		GIRDER						35833
2		1	108TF	PL 2 1/2 x 28	57	10 7/16	A709-50WT2	1020	CVN	13773
3		1	108WB	PL 5/8 x 56	57	11 7/16	A709-50WT2	1026	CVN	6896
4		1	108BF	PL 2 5/8 x 28	57	10 7/16	A709-50WT2	1032	CVN	14462
5		2	x103F	PL 1 1/8 x 9	4	8	A709-50WT2	1091	CVN MIE	321
6		6	x103g	PL 1/2 x 8	4	8	A709-50WT2	1092	CVN	381

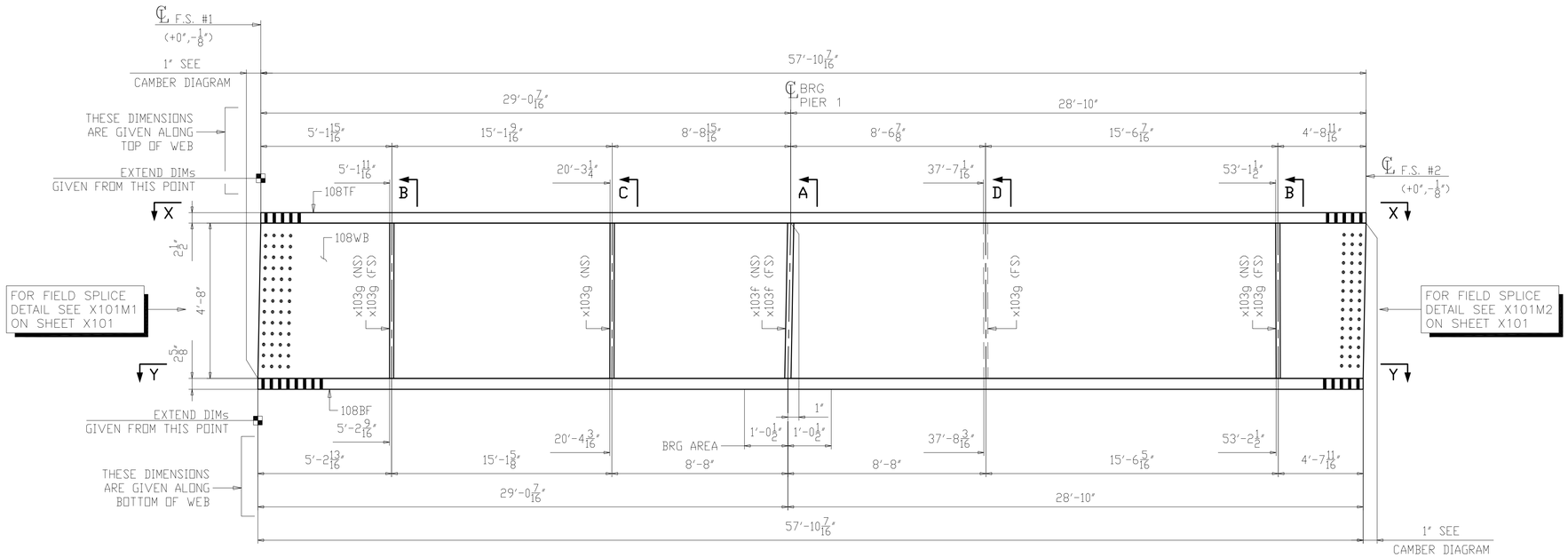

ONE ~ GIRDER ~ 108B2

1. FOR GENERAL NOTES SEE SHEET GN101.
2. FOR CAMBER AND FLANGE DIAGRAM SEE SHEET BG108.
3. FOR HORIZONTAL CURVING DIAGRAMS SEE SHEET HC102.
4. FOR GIRDER STANDARD DETAILS SEE SHEET X103.
5. FOR FIELD SPLICE DETAILS SEE X101.
6. T2 - DENOTES MATERIAL SUBJECT TO CHARPY V-NOTCH TESTING (ZONE 2).
7. ALL MATERIAL A709-50WT2 (UN).
8. BRG AREA - DENOTES AREA TO BE FLAT AND TRUE TO RECEIVE SOLE PLATE.

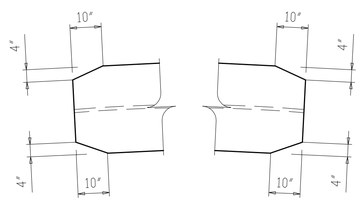

SECTION X-X

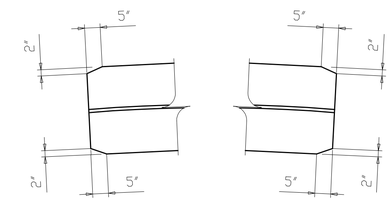

SECTION Y-Y

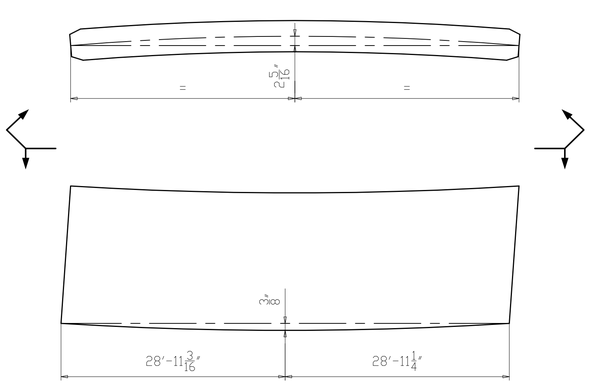

CAMBER & CURVE DIAGRAM

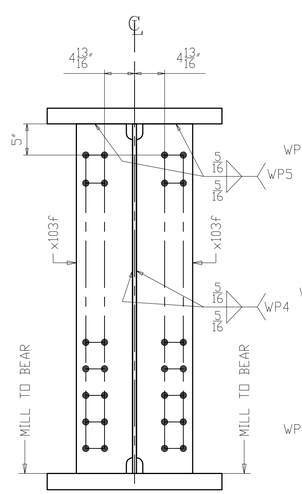

SECTION A
(K-FRAME PIER 1)

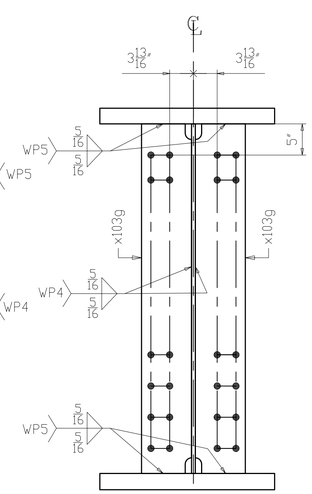

SECTION B
(INTERMEDIATE K-FRAME)

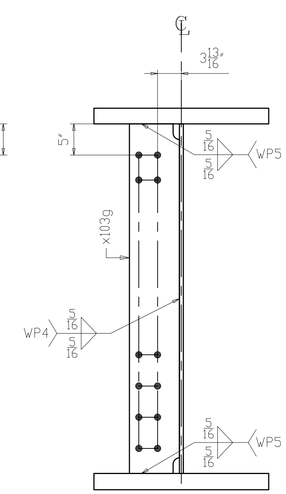

SECTION C
(INTERMEDIATE K-FRAME)

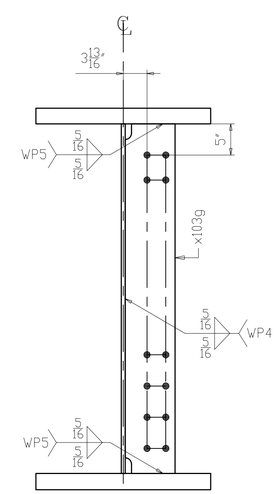

SECTION D
(INTERMEDIATE K-FRAME)

NO.	DATE	REMARKS	BY

REVISIONS

Veritas STEEL
2-EAU CLAIRE, WI 3-WAUSAU, WI 4-PALATKA, FL
IAS TENCA 1605

STRUCTURE	CUY-010-1978R, OH-10 EASTBOUND OVER GCRTA BLUE AND GREEN LINES
LOCATION	CLEVELAND, OHIO CUYAHOGA COUNTY
PROJECT NO.	17-3000
ENGINEER	MICHAEL BAKER INTERNATIONAL
CONTRACTOR	KOKOSING
ITEM	GIRDER 108B2
SURFACE PREP.	SEE P101 OPEN HOLES 1 1/16"Ø (U.N.O.)
PAINT	SEE P101

APPROVAL	DRAWN AM 06/05/19	SHEET NO.	PLANT	ORDER NO.
SHOP	CHECKED DP 06/20/19	108	3	317023A-20

LINE	SHIP MARK	NO. OF PCS.	ASS'Y MARK	MATERIAL SHAPE	LENGTH FT.	LENGTH IN.	MATERIAL SPEC.	ITEM NO.	REMARKS	
1	109C2	ONE		GIRDER						35784
2		1	109TF	PL 2 1/2 x 28	57	7	A709-50WT2	1021	CVN	13705
3		1	109WB	PL 5/8 x 56	57	7 7/8	A709-50WT2	1027	CVN	6861
4		1	109BF	PL 2 5/8 x 28	57	7	A709-50WT2	1033	CVN	14390
5		2	x103F	PL 1 1/8 x 9	4	8	A709-50WT2	1091	CVN MIE	321
6		5	x103g	PL 1/2 x 8	4	8	A709-50WT2	1092	CVN	317
7		3	x103m	PL 1/2 x 8	4	8	A709-50WT2	1093	CVN	190

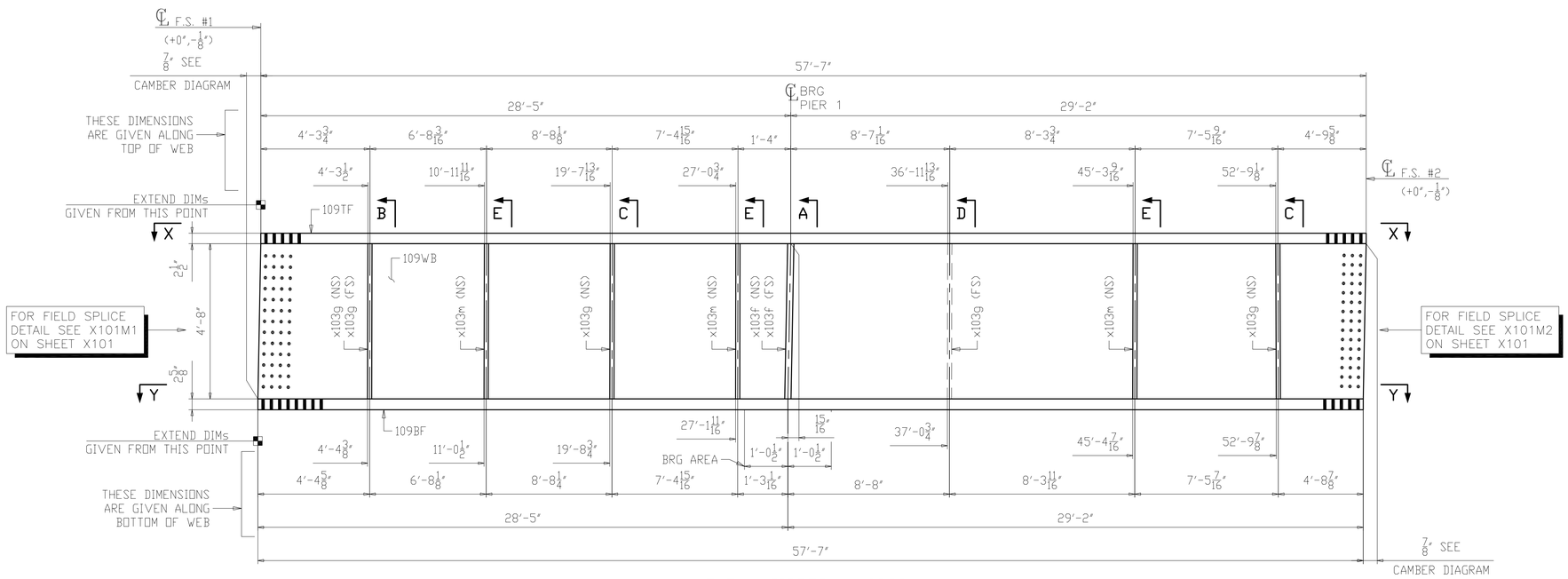

ONE ~ GIRDER ~ 109C2

1. FOR GENERAL NOTES SEE SHEET GN101.
2. FOR CAMBER AND FLANGE DIAGRAM SEE SHEET BG109.
3. FOR HORIZONTAL CURVING DIAGRAMS SEE SHEET HC102.
4. FOR GIRDER STANDARD DETAILS SEE SHEET X103.
5. FOR FIELD SPLICE DETAILS SEE X101.
6. T2 - DENOTES MATERIAL SUBJECT TO CHARPY V-NOTCH TESTING (ZONE 2).
7. ALL MATERIAL A709-50WT2 (UN).
8. BRG AREA - DENOTES AREA TO BE FLAT AND TRUE TO RECEIVE SOLE PLATE.

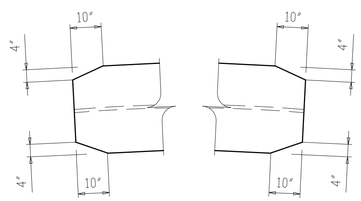

SECTION X-X

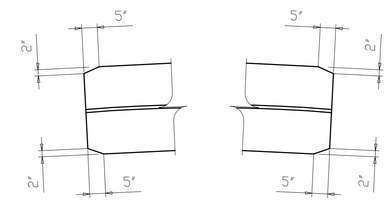

SECTION Y-Y

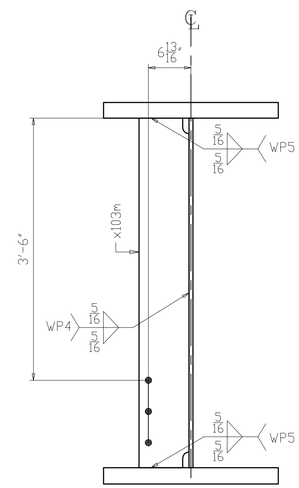

SECTION E
(UTILITY SUPPORT)

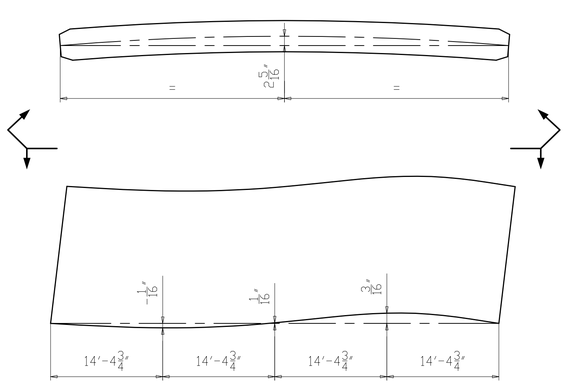

CAMBER & CURVE DIAGRAM

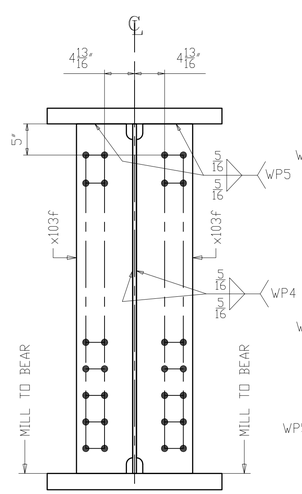

SECTION A
(K-FRAME PIER 1)

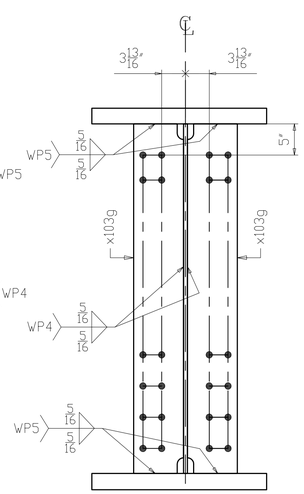

SECTION B
(INTERMEDIATE K-FRAME)

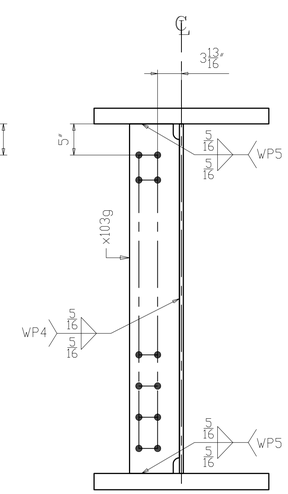

SECTION C
(INTERMEDIATE K-FRAME)

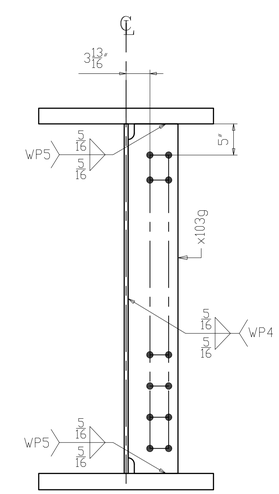

SECTION D
(INTERMEDIATE K-FRAME)

NO.	DATE	REMARKS	BY

REVISIONS

Veritas STEEL
2-EAU CLAIRE, WI 3-WAUSAU, WI 4-PALATKA, FL
TENCA 1605

STRUCTURE	CUY-010-1978R, OH-10 EASTBOUND OVER GCRTA BLUE AND GREEN LINES
LOCATION	CLEVELAND, OHIO CUYAHOGA COUNTY
PROJECT NO.	17-3000
ENGINEER	MICHAEL BAKER INTERNATIONAL
CONTRACTOR	KOKOSING
ITEM	GIRDER 109C2
SURFACE PREP.	SEE P101 OPEN HOLES 1 1/16"Ø (U.N.O.)
PAINT	SEE P101

APPROVAL	DRAWN AM 06/05/19	SHEET NO.	PLANT	ORDER NO.
SHOP	CHECKED DP 06/20/19	109	3	317023A-20

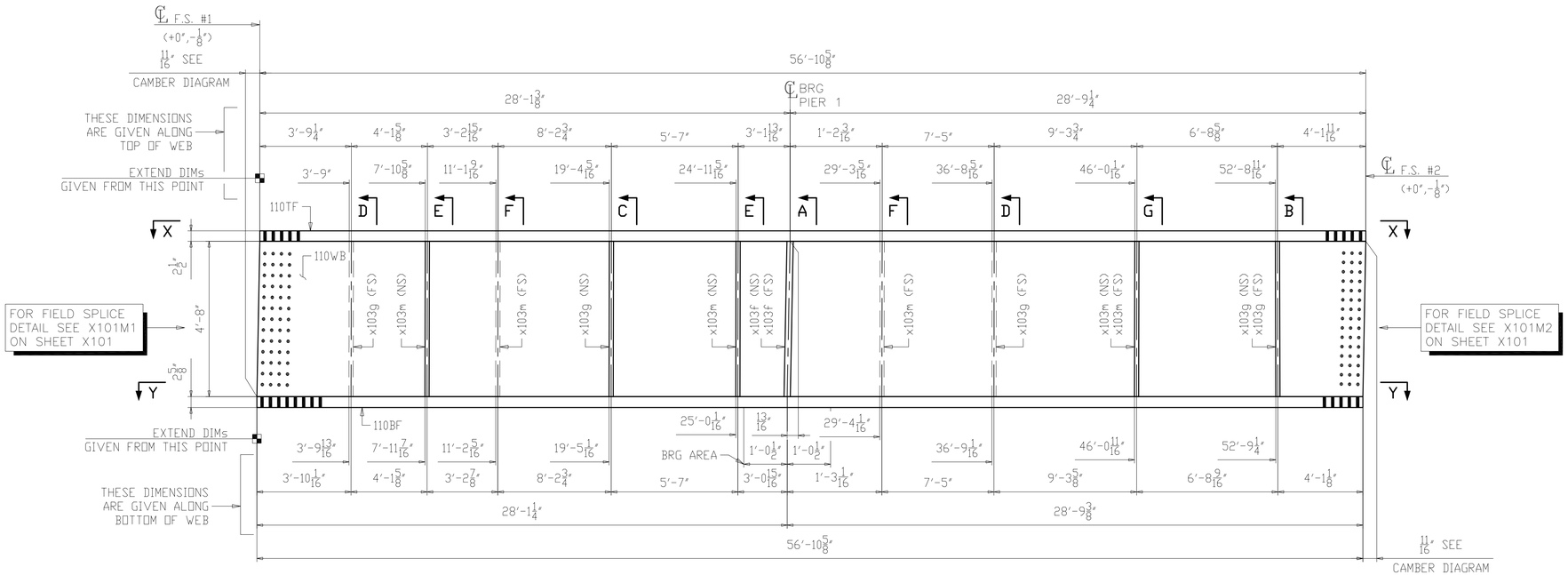

ONE ~ GIRDER ~ 110D2

1. FOR GENERAL NOTES SEE SHEET GN101.
2. FOR CAMBER AND FLANGE DIAGRAM SEE SHEET BG110.
3. FOR HORIZONTAL CURVING DIAGRAMS SEE SHEET HC102.
4. FOR GIRDER STANDARD DETAILS SEE SHEET X103.
5. FOR FIELD SPLICE DETAILS SEE X101.
6. T2 - DENOTES MATERIAL SUBJECT TO CHARPY V-NOTCH TESTING (ZONE 2).
7. ALL MATERIAL A709-50WT2 (UN).
8. BRG AREA - DENOTES AREA TO BE FLAT AND TRUE TO RECEIVE SOLE PLATE.

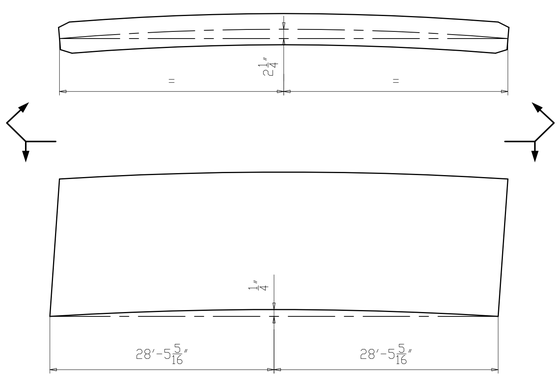

CAMBER & CURVE DIAGRAM

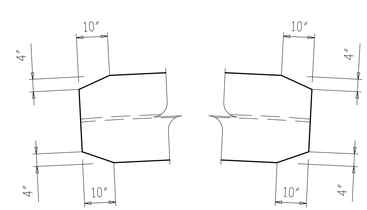

SECTION X-X

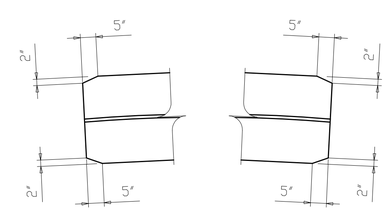

SECTION Y-Y

NO.	DATE	REMARKS	BY

REVISIONS

Veritas STEEL
2-EAU CLAIRE, WI 3-WAUSAU, WI 4-PALATKA, FL
IAS 1605

STRUCTURE	CUY-010-1978R, OH-10 EASTBOUND OVER GCRTA BLUE AND GREEN LINES
LOCATION	CLEVELAND, OHIO CUYAHOGA COUNTY
PROJECT NO.	17-3000
ENGINEER	MICHAEL BAKER INTERNATIONAL
CONTRACTOR	KOKOSING
ITEM	GIRDER 110D2
SURFACE PREP.	SEE P101 OPEN HOLES 1 1/16"Ø (U.N.O.)
PAINT	SEE P101

APPROVAL	DRAWN AM 06/05/19	SHEET NO.	PLANT	ORDER NO.
SHOP	CHECKED DP 06/20/19	110AB	3	317023A-20

LINE	SHIP MARK	NO. OF PCS.	ASS'Y MARK	MATERIAL					
				SHAPE	LENGTH FT.	LENGTH IN.	MATERIAL SPEC.	ITEM NO.	REMARKS
1	110D2	ONE		GIRDER					35550
2		1	110TF	PL 2 1/2 x 28	56	10 5/8	A709-50WT2	1022	CVN 13539
3		1	110WB	PL 5/8 x 56	56	11 5/16	A709-50WT2	1028	CVN 6776
4		1	110BF	PL 2 5/8 x 28	56	10 5/8	A709-50WT2	1034	CVN 14216
5		2	x103f	PL 1 1/8 x 9	4	8	A709-50WT2	1091	CVN M1E 321
6		5	x103g	PL 1/2 x 8	4	8	A709-50WT2	1092	CVN 317
7		6	x103m	PL 1/2 x 8	4	8	A709-50WT2	1093	CVN 381

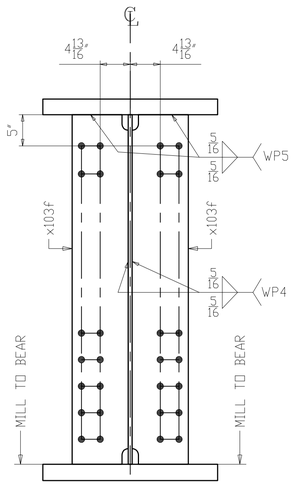

SECTION A
(K-FRAME PIER 1)

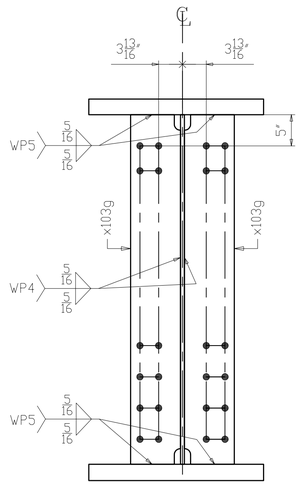

SECTION B
(INTERMEDIATE K-FRAME)

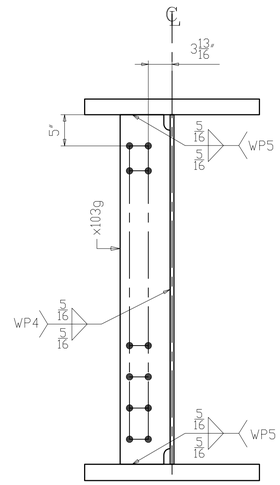

SECTION C
(INTERMEDIATE K-FRAME)

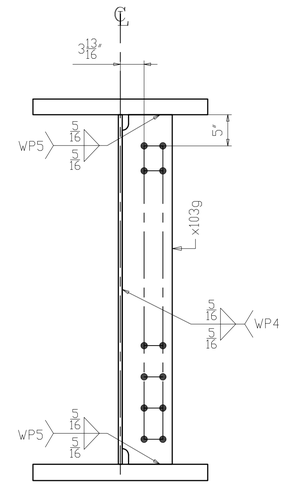

SECTION D
(INTERMEDIATE K-FRAME)

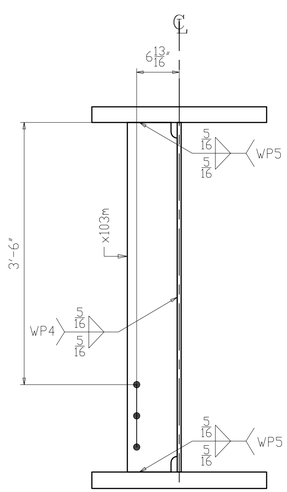

SECTION E
(UTILITY SUPPORT)

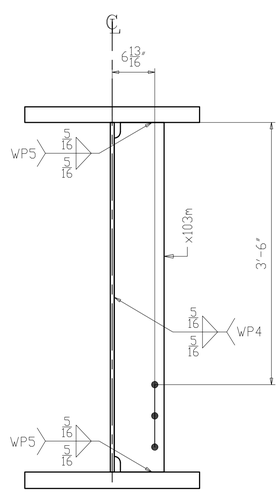

SECTION F
(UTILITY SUPPORT)

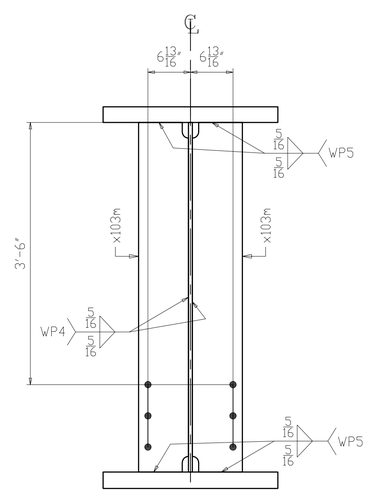

SECTION G
(UTILITY SUPPORT)

NO.	DATE	REMARKS	BY

REVISIONS

Veritas STEEL
2-EAU CLAIRE, WI 3-WAUSAU, WI 4-PALATKA, FL
TENCA 1605

STRUCTURE: CUY-010-1978R, OH-10 EASTBOUND OVER GCRTA BLUE AND GREEN LINES
LOCATION: CLEVELAND, OHIO CUYAHOGA COUNTY
PROJECT NO.: 17-3000
ENGINEER: MICHAEL BAKER INTERNATIONAL
CONTRACTOR: KOKOSING

ITEM: GIRDER 110D2
SURFACE PREP.: SEE P101 OPEN HOLES: 1 1/16"ø (U.N.O.)
PAINT: SEE P101

APPROVAL	DRAWN AM 06/05/19	SHEET NO.	PLANT	ORDER NO.
SHOP	CHECKED DP 06/20/19	110B	3	317023A-20

LINE	SHIP MARK	NO. OF PCS.	ASS'Y MARK	MATERIAL SHAPE	LENGTH FT.	LENGTH IN.	MATERIAL SPEC.	ITEM NO.	REMARKS	
1	111E2	ONE		GIRDER						36771
2		1	111TF	PL 2 1/2 x 28	59	1 5/16	A709-50WT2	1023	CVN	14068
3		1	111WB	PL 5/8 x 56	59	1 7/8	A709-50WT2	1029	CVN	7040
4		1	111BF	PL 2 5/8 x 28	59	1 5/16	A709-50WT2	1035	CVN	14771
5		2	x103f	PL 1 1/8 x 9	4	8	A709-50WT2	1091	CVN MIE	321
6		6	x103g	PL 1/2 x 8	4	8	A709-50WT2	1092	CVN	381
7		3	x103m	PL 1/2 x 8	4	8	A709-50WT2	1093	CVN	190

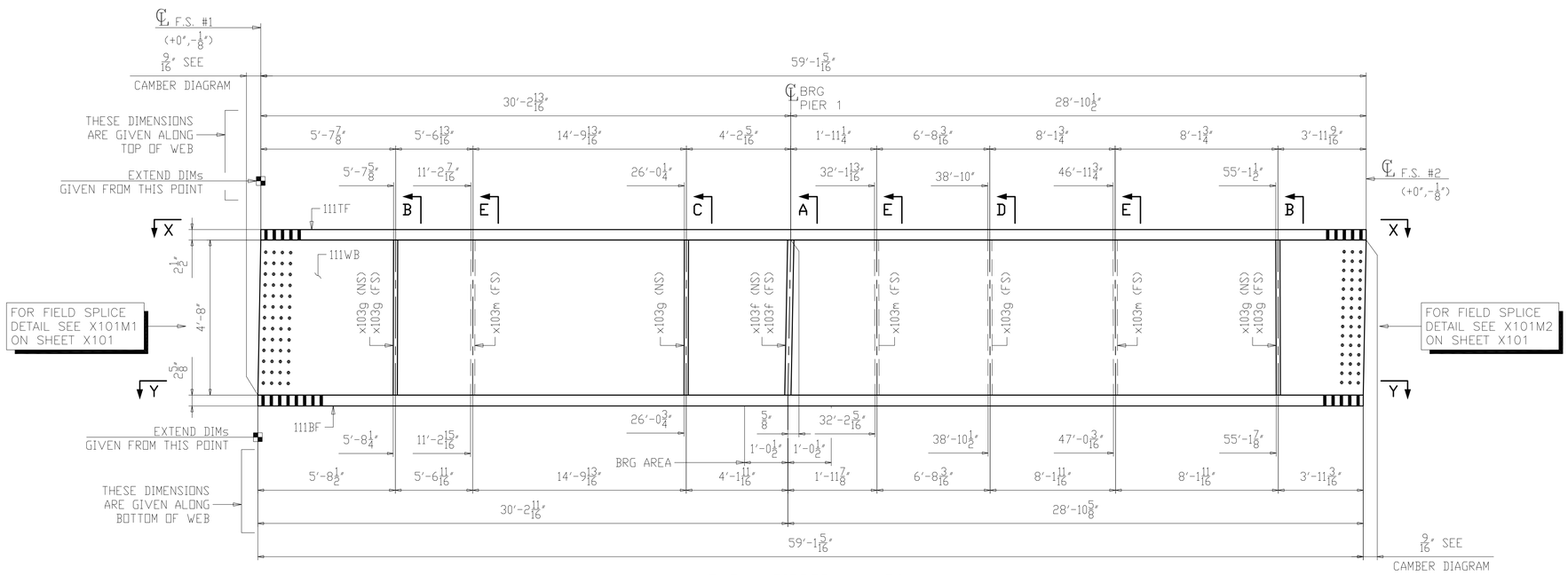

ONE ~ GIRDER ~ 111E2

1. FOR GENERAL NOTES SEE SHEET GN101.
2. FOR CAMBER AND FLANGE DIAGRAM SEE SHEET BG111.
3. FOR HORIZONTAL CURVING DIAGRAMS SEE SHEET HC102.
4. FOR GIRDER STANDARD DETAILS SEE SHEET X103.
5. FOR FIELD SPLICE DETAILS SEE X101.
6. T2 - DENOTES MATERIAL SUBJECT TO CHARPY V-NOTCH TESTING (ZONE 2).
7. ALL MATERIAL A709-50WT2 (UN).
8. BRG AREA - DENOTES AREA TO BE FLAT AND TRUE TO RECEIVE SOLE PLATE.

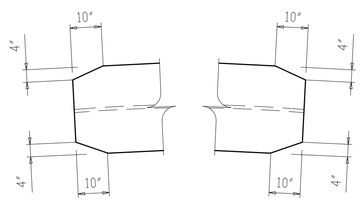

SECTION X-X

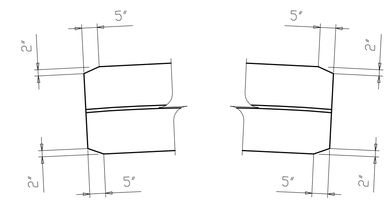

SECTION Y-Y

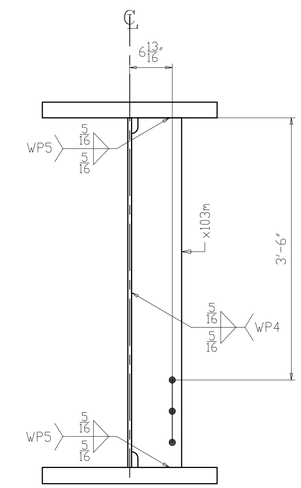

SECTION E
(UTILITY SUPPORT)

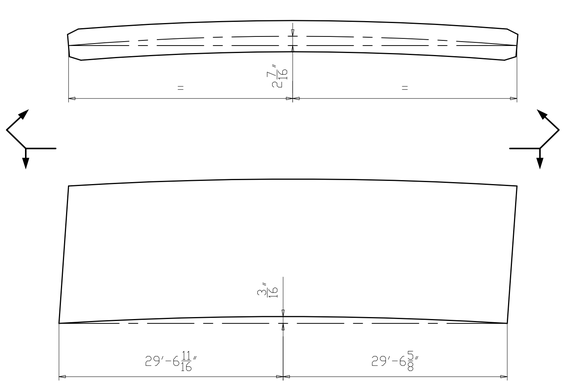

CAMBER & CURVE DIAGRAM

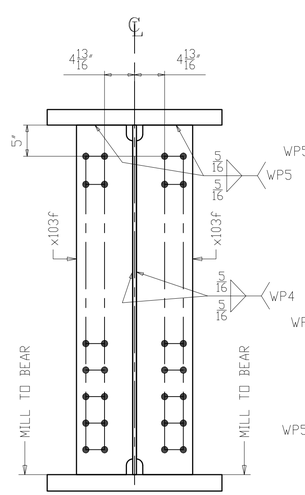

SECTION A
(K-FRAME PIER 1)

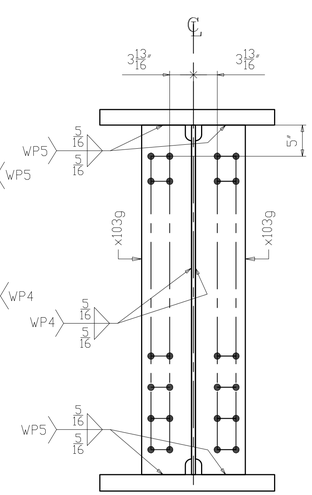

SECTION B
(INTERMEDIATE K-FRAME)

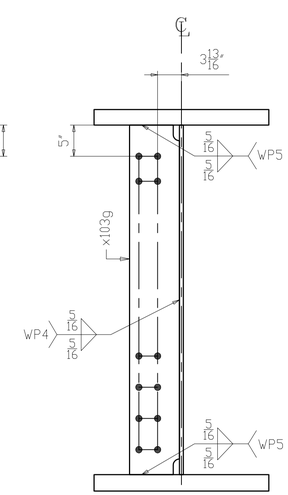

SECTION C
(INTERMEDIATE K-FRAME)

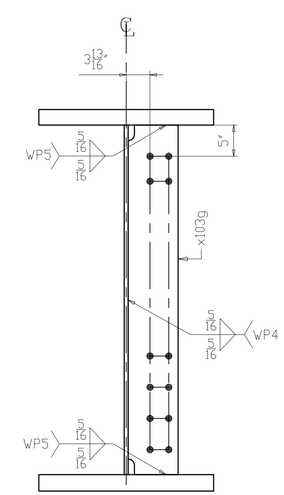

SECTION D
(INTERMEDIATE K-FRAME)

NO.	DATE	REMARKS	BY
△			

REVISIONS

Veritas STEEL
2-EAU CLAIRE, WI 3-WAUSAU, WI 4-PALATKA, FL
IENCA 1605

STRUCTURE	CUY-010-1978R, OH-10 EASTBOUND OVER GCRTA BLUE AND GREEN LINES
LOCATION	CLEVELAND, OHIO CUYAHOGA COUNTY
PROJECT NO.	17-3000
ENGINEER	MICHAEL BAKER INTERNATIONAL
CONTRACTOR	KOKOSING
ITEM	GIRDER 111E2
SURFACE PREP.	SEE P101
OPEN HOLES	1 1/16"ø (U.N.O.)
PAINT	SEE P101

APPROVAL	DRAWN AM 06/05/19	SHEET NO.	PLANT	ORDER NO.
SHOP	CHECKED DP 06/20/19	111	3	317023A-20

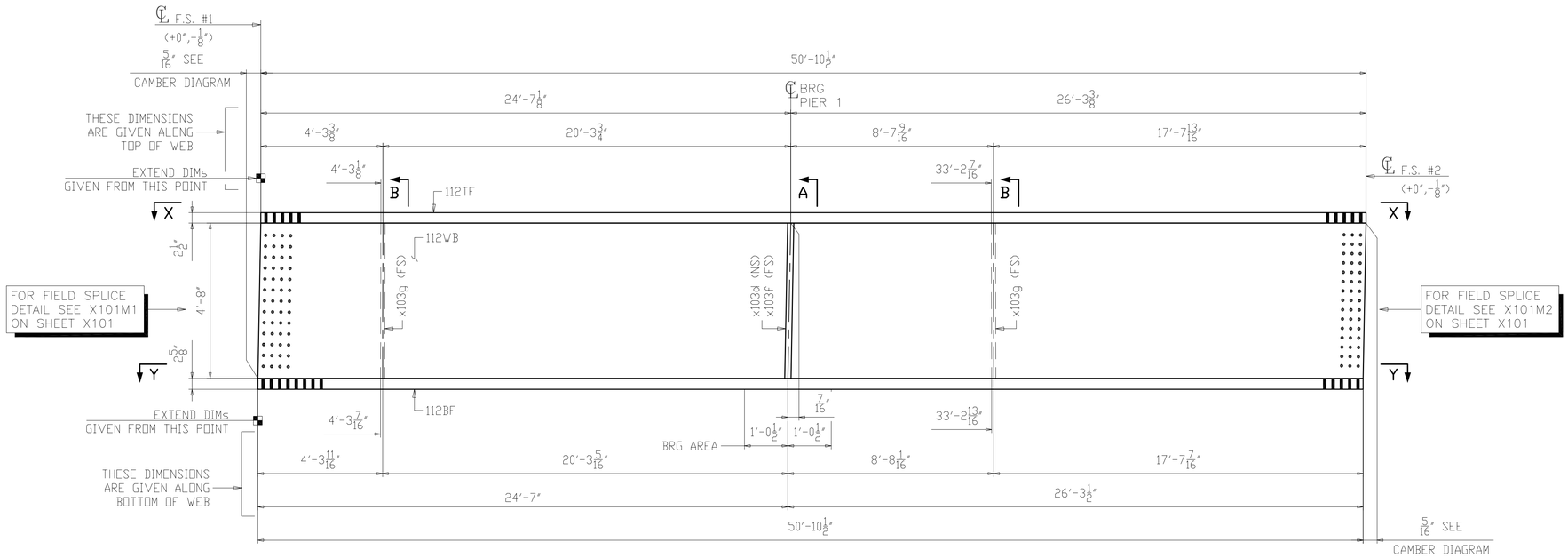

ONE ~ GIRDER ~ 112F2

LINE	SHIP MARK	NO. OF PCS.	ASS'Y MARK	MATERIAL SHAPE	LENGTH FT.	LENGTH IN.	MATERIAL SPEC.	ITEM NO.	REMARKS	
1	112F2	ONE		GIRDER						31328
2		1	112TF	PL 2 1/2 x 28	50	10 1/2	A709-50WT2	1024	CVN	12108
3		1	112WB	PL 5/8 x 56	50	10 13/16	A709-50WT2	1030	CVN	6057
4		1	112BF	PL 2 5/8 x 28	50	10 1/2	A709-50WT2	1036	CVN	12714
5		1	x103d	PL 1 1/8 x 9	4	8	A709-50WT2	1091	CVN MIE	161
6		1	x103f	PL 1 1/8 x 9	4	8	A709-50WT2	1091	CVN MIE	161
7		2	x103g	PL 1/2 x 8	4	8	A709-50WT2	1092	CVN	127

1. FOR GENERAL NOTES SEE SHEET GN101.
2. FOR CAMBER AND FLANGE DIAGRAM SEE SHEET BG112.
3. FOR HORIZONTAL CURVING DIAGRAMS SEE SHEET HC102.
4. FOR GIRDER STANDARD DETAILS SEE SHEET X103.
5. FOR FIELD SPLICE DETAILS SEE X101.
6. T2 - DENOTES MATERIAL SUBJECT TO CHARPY V-NOTCH TESTING (ZONE 2).
7. ALL MATERIAL A709-50WT2 (UN).
8. BRG AREA - DENOTES AREA TO BE FLAT AND TRUE TO RECEIVE SOLE PLATE.

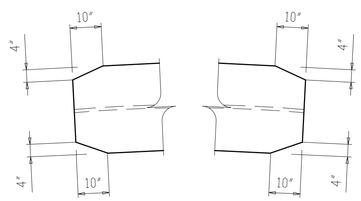

SECTION X-X

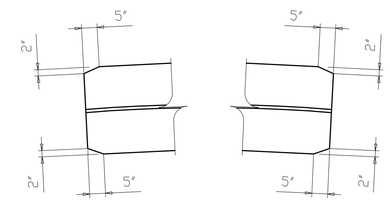

SECTION Y-Y

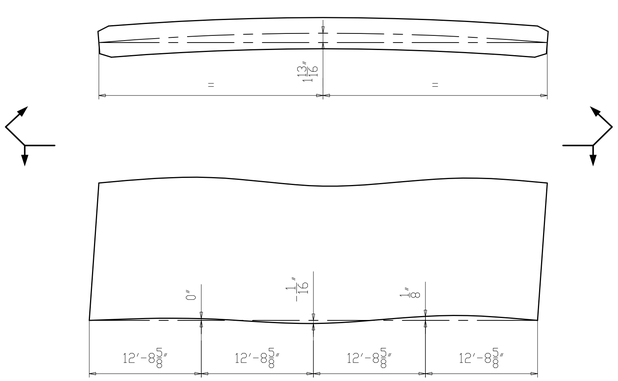

CAMBER & CURVE DIAGRAM

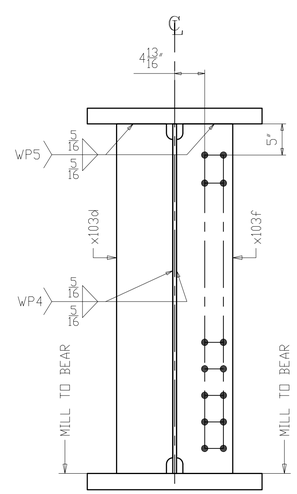

SECTION A
(K-FRAME PIER 1)

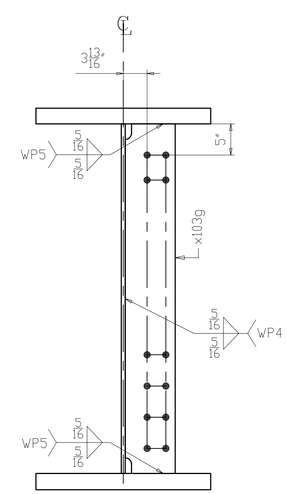

SECTION B
(INTERMEDIATE K-FRAME)

NO.	DATE	REMARKS	BY
△			

REVISIONS

Veritas STEEL
2-EAU CLAIRE, WI 3-WAUSAU, WI 4-PALATKA, FL
TENCA 1605

STRUCTURE: CUY-010-1978R, OH-10 EASTBOUND OVER GCRTA BLUE AND GREEN LINES
LOCATION: CLEVELAND, OHIO CUYAHOGA COUNTY
PROJECT NO.: 17-3000
ENGINEER: MICHAEL BAKER INTERNATIONAL
CONTRACTOR: KOKOSING

ITEM: GIRDER 112F2
SURFACE PREP.: SEE P101 OPEN HOLES: 1 1/16"Ø (U.N.O.)
PAINT: SEE P101

APPROVAL	DRAWN AM 06/05/19	SHEET NO.	PLANT	ORDER NO.
SHOP	CHECKED DP 06/20/19	112	3	317023A-20

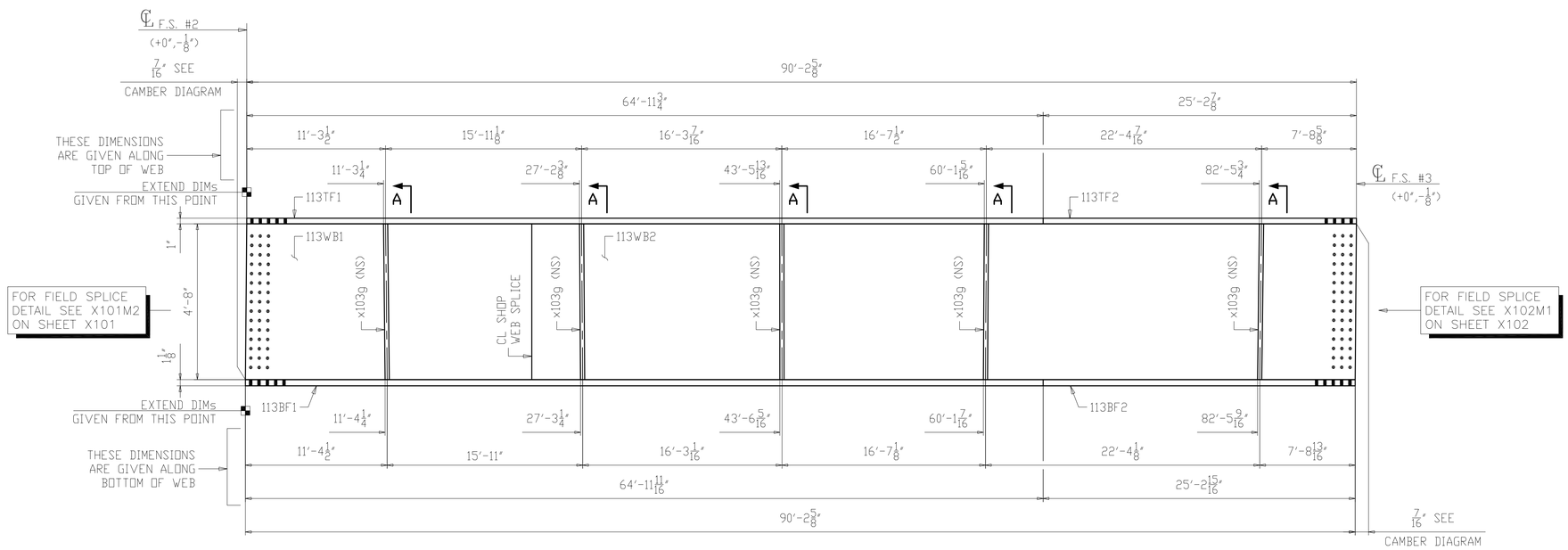

ONE ~ GIRDER ~ 113A3

1. FOR GENERAL NOTES SEE SHEET GN101.
2. FOR CAMBER AND FLANGE DIAGRAM SEE SHEET BG113.
3. FOR HORIZONTAL CURVING DIAGRAMS SEE SHEET HC103.
4. FOR GIRDER STANDARD DETAILS SEE SHEET X103.
5. FOR FIELD SPLICE DETAILS SEE X101 & X102.
6. T2 - DENOTES MATERIAL SUBJECT TO CHARPY V-NOTCH TESTING (ZONE 2).
7. ALL MATERIAL A709-50WT2 (UN).

LINE	SHIP MARK	NO. OF PCS.	ASS'Y MARK	MATERIAL SHAPE	LENGTH FT.	LENGTH IN.	MATERIAL SPEC.	ITEM NO.	REMARKS
1	113A3	ONE		GIRDER					25474
2		1	113TF1	PL 1 x 20	64	11 3/4	A709-50WT2	1037	CVN 4419
3		1	113TF2	PL 1 x 20	25	2 7/8	A709-50WT2	1183	CVN 1716
4		1	113WB1	PL 5/8 x 56	23	3 1/16	A709-50WT2	1184	CVN 2767
5		1	113WB2	PL 5/8 x 56	67	0	A709-50WT2	1043	CVN 7973
6		1	113BF1	PL 1 1/8 x 24	64	11 11/16	A709-50WT2	1049	CVN 5965
7		1	113BF2	PL 1 1/8 x 24	25	2 15/16	A709-50WT2	1185	CVN 2317
8		5	x103g	PL 1/2 x 8	4	8	A709-50WT2	1092	CVN 317

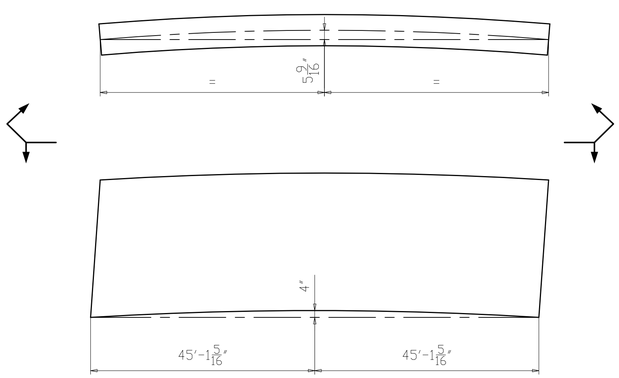

CAMBER & CURVE DIAGRAM

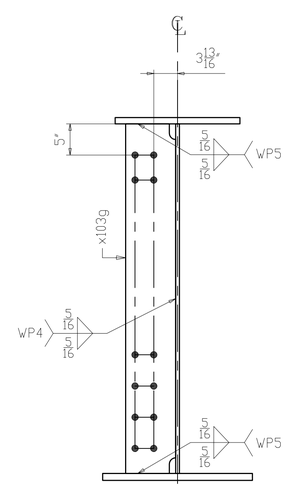

SECTION A
(INTERMEDIATE K-FRAME)

NO.	DATE	REMARKS	BY

REVISIONS

Veritas STEEL
2-EAU CLAIRE, WI 3-WAUSAU, WI 4-PALATKA, FL
TENCA 1605

STRUCTURE: CUY-010-1978R, OH-10 EASTBOUND OVER GCRTA BLUE AND GREEN LINES
LOCATION: CLEVELAND, OHIO CUYAHOGA COUNTY
PROJECT NO.: 17-3000
ENGINEER: MICHAEL BAKER INTERNATIONAL
CONTRACTOR: KOKOSING

ITEM: GIRDER 113A3
SURFACE PREP.: SEE P101 OPEN HOLES: 1 1/16"ø (U.N.O.)
PAINT: SEE P101

APPROVAL	DRAWN AM 05/17/19	SHEET NO.	PLANT	ORDER NO.
SHOP	CHECKED DP 06/05/19	113	3	317023A-20

LINE	SHIP MARK	NO. OF PCS.	ASS'Y MARK	MATERIAL SHAPE	LENGTH FT.	LENGTH IN.	MATERIAL SPEC.	ITEM NO.	REMARKS	
1	114B3	ONE		GIRDER						23811
2		1	114TF	PL 1 x 20	83	9 5/8	A709-50WT2	1038	CVN	5699
3		1	114WB	PL 5/8 x 56	83	9 7/8	A709-50WT2	1044	CVN	9975
4		1	114BF1	PL 1 1/8 x 24	18	9 15/16	A709-50WT2	1186	CVN	1728
5		1	114BF2	PL 1 1/8 x 24	64	11 11/16	A709-50WT2	1050	CVN	5965
6		5	x103g	PL 1/2 x 8	4	8	A709-50WT2	1092	CVN	317
7		2	x103k	PL 1/2 x 8	4	8	A709-50WT2	1094	CVN	127

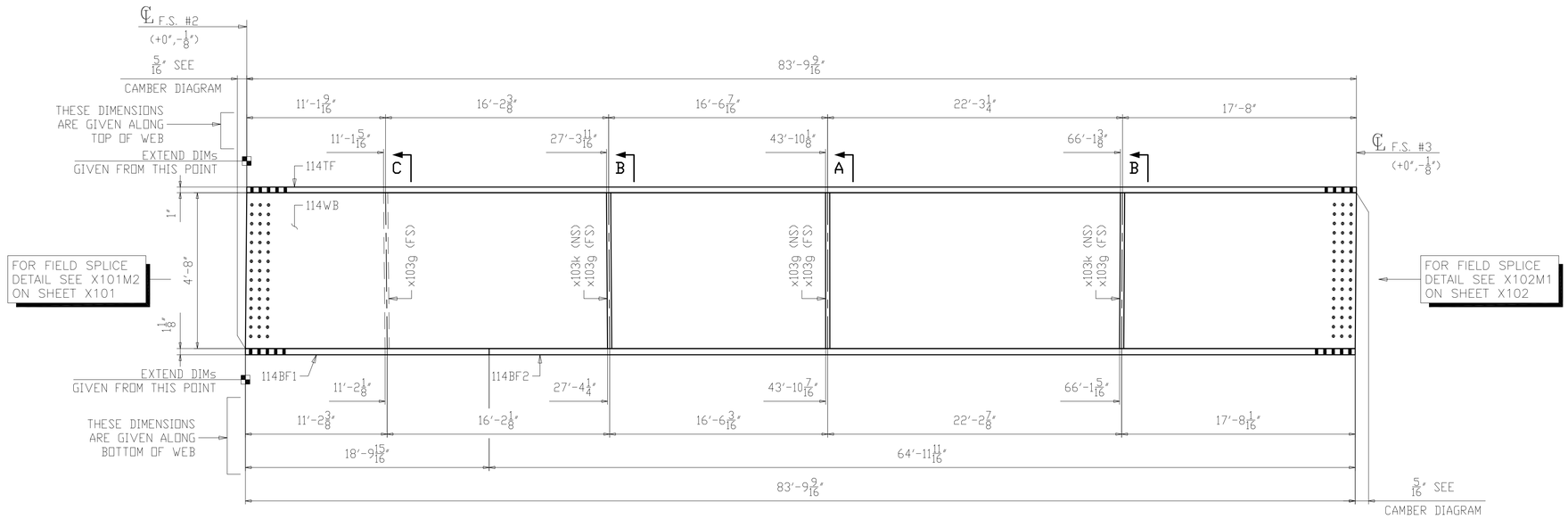

ONE ~ GIRDER ~ 114B3

1. FOR GENERAL NOTES SEE SHEET GN101.
2. FOR CAMBER AND FLANGE DIAGRAM SEE SHEET BG114.
3. FOR HORIZONTAL CURVING DIAGRAMS SEE SHEET HC103.
4. FOR GIRDER STANDARD DETAILS SEE SHEET X103.
5. FOR FIELD SPLICE DETAILS SEE X101 & X102.
6. T2 - DENOTES MATERIAL SUBJECT TO CHARPY V-NOTCH TESTING (ZONE 2).
7. ALL MATERIAL A709-50WT2 (UN).

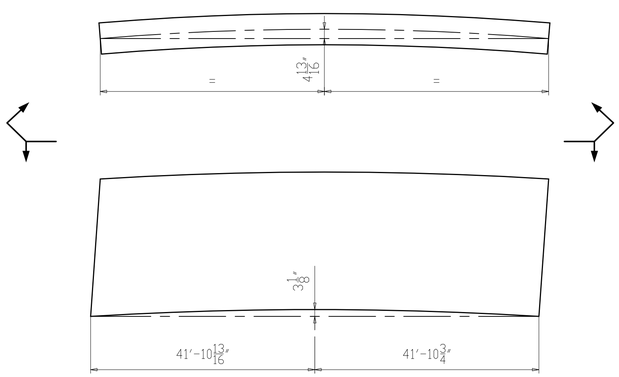

CAMBER & CURVE DIAGRAM

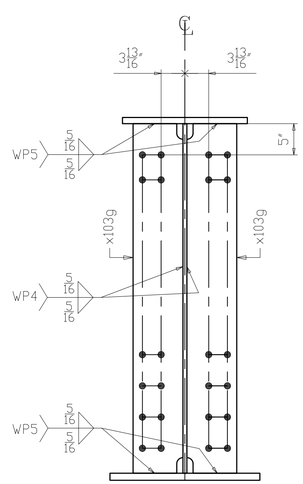

SECTION A
(INTERMEDIATE K-FRAME)

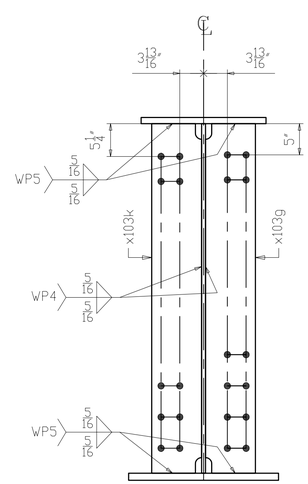

SECTION B
(INTERMEDIATE K-FRAME
& LEAN ON BRACING)

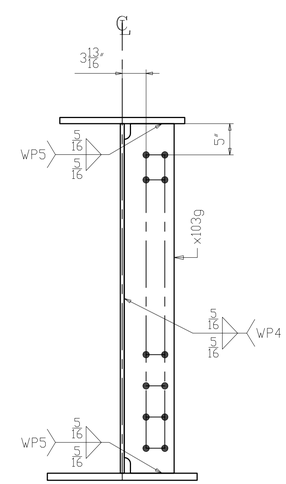

SECTION C
(INTERMEDIATE K-FRAME)

NO.	DATE	REMARKS	BY

REVISIONS

Veritas STEEL
2-EAU CLAIRE, WI 3-WAUSAU, WI 4-PALATKA, FL
IAS NCA 1605

STRUCTURE: CUY-010-1978R, OH-10 EASTBOUND OVER GCRTA BLUE AND GREEN LINES
LOCATION: CLEVELAND, OHIO CUYAHOGA COUNTY
PROJECT NO.: 17-3000
ENGINEER: MICHAEL BAKER INTERNATIONAL
CONTRACTOR: KOKOSING

ITEM: GIRDER 114B3
SURFACE PREP.: SEE P101 OPEN HOLES: 1 1/16"Ø (U.N.O.)
PAINT: SEE P101

APPROVAL	DRAWN AM 06/05/19	SHEET NO.	PLANT	ORDER NO.
SHOP	CHECKED DP 06/20/19	114	3	317023A-20

LINE	SHIP MARK	NO. OF PCS.	ASS'Y MARK	MATERIAL SHAPE	LENGTH FT.	LENGTH IN.	MATERIAL SPEC.	ITEM NO.	REMARKS	
1	115C3	ONE		GIRDER						22907
2		1	115TF	PL 1 x 20	79	5 1/16	A709-50WT2	1039	CVN	5401
3		1	115WB	PL 5/8 x 56	79	5 1/4	A709-50WT2	1045	CVN	9453
4		1	115BF1	PL 1 1/8 x 24	14	5 7/16	A709-50WT2	1187	CVN	1327
5		1	115BF2	PL 1 1/8 x 24	64	11 5/8	A709-50WT2	1051	CVN	5964
6		4	x103g	PL 1/2 x 8	4	8	A709-50WT2	1092	CVN	254
7		2	x103k	PL 1/2 x 8	4	8	A709-50WT2	1094	CVN	127
8		6	x103m	PL 1/2 x 8	4	8	A709-50WT2	1093	CVN	381

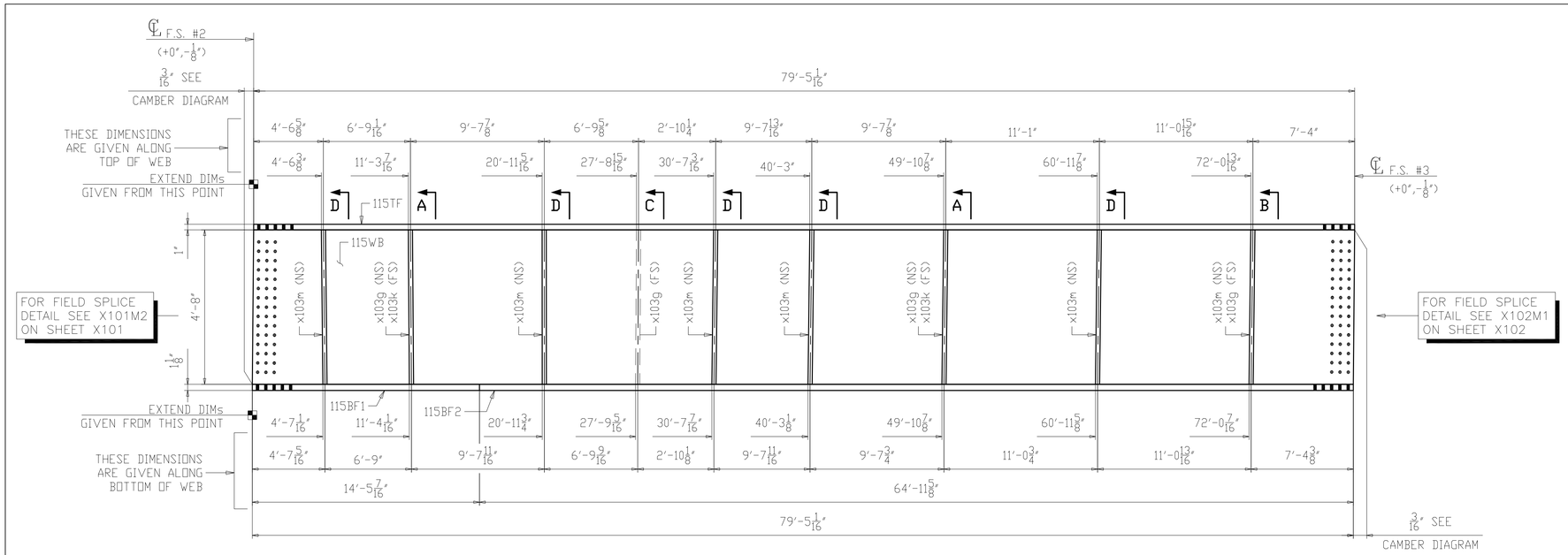

ONE ~ GIRDER ~ 115C3

1. FOR GENERAL NOTES SEE SHEET GN101.
2. FOR CAMBER AND FLANGE DIAGRAM SEE SHEET BG115.
3. FOR HORIZONTAL CURVING DIAGRAMS SEE SHEET HC103.
4. FOR GIRDER STANDARD DETAILS SEE SHEET X103.
5. FOR FIELD SPLICE DETAILS SEE X101 & X102.
6. T2 - DENOTES MATERIAL SUBJECT TO CHARPY V-NOTCH TESTING (ZONE 2).
7. ALL MATERIAL A709-50WT2 (UN).

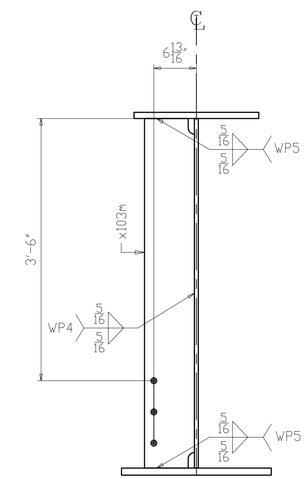

SECTION D
(UTILITY SUPPORT)

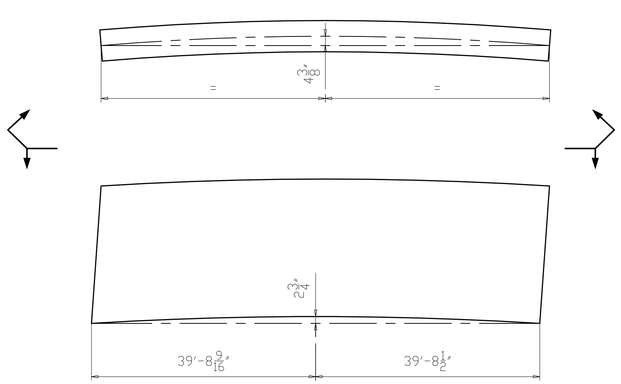

CAMBER & CURVE DIAGRAM

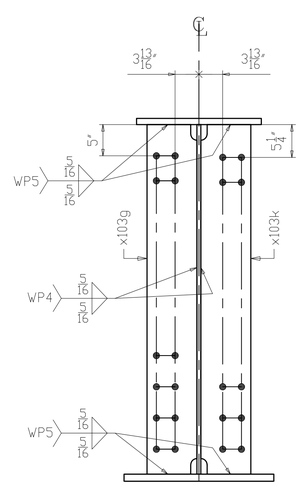

SECTION A
(INTERMEDIATE K-FRAME
& LEAN ON BRACING)

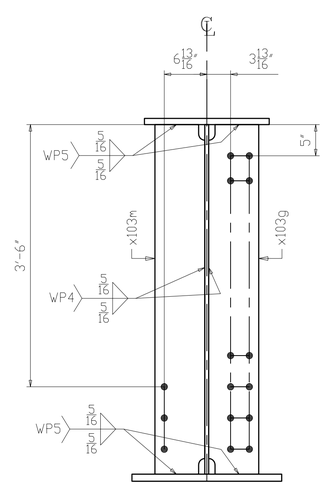

SECTION B
(INTERMEDIATE K-FRAME
& UTILITY SUPPORT)

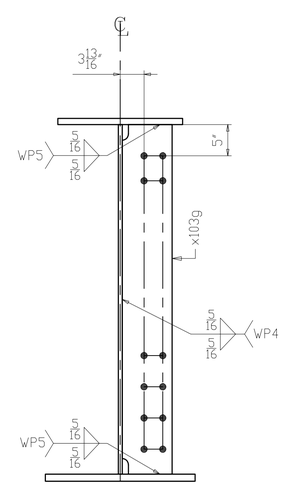

SECTION C
(INTERMEDIATE K-FRAME)

NO.	DATE	REMARKS	BY

REVISIONS

Veritas STEEL
2-EAU CLAIRE, WI 3-WAUSAU, WI 4-PALATKA, FL
TENCA 1605

STRUCTURE	CUY-010-1978R, OH-10 EASTBOUND OVER GCRTA BLUE AND GREEN LINES
LOCATION	CLEVELAND, OHIO CUYAHOGA COUNTY
PROJECT NO.	17-3000
ENGINEER	MICHAEL BAKER INTERNATIONAL
CONTRACTOR	KOKOSING
ITEM	GIRDER 115C3
SURFACE PREP.	SEE P101 OPEN HOLES 1 1/16"Ø (U.N.O.)
PAINT	SEE P101

APPROVAL	DRAWN AM 06/05/19	SHEET NO.	PLANT	ORDER NO.
SHOP	CHECKED DP 06/20/19	115	3	317023A-20

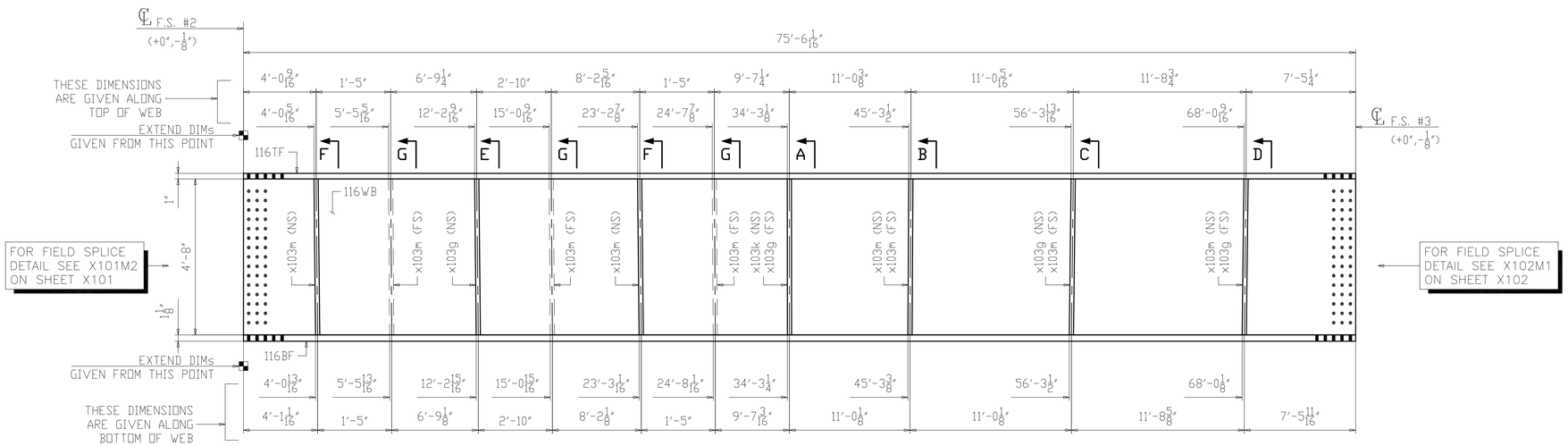

ONE ~ GIRDER ~ 116D3

1. FOR GENERAL NOTES SEE SHEET GN101.
2. FOR CAMBER AND FLANGE DIAGRAM SEE SHEET BG116.
3. FOR HORIZONTAL CURVING DIAGRAMS SEE SHEET HC103.
4. FOR GIRDER STANDARD DETAILS SEE SHEET X103.
5. FOR FIELD SPLICE DETAILS SEE X101 & X102.
6. T2 - DENOTES MATERIAL SUBJECT TO CHARPY V-NOTCH TESTING (ZONE 2).
7. ALL MATERIAL A709-50WT2 (UN).

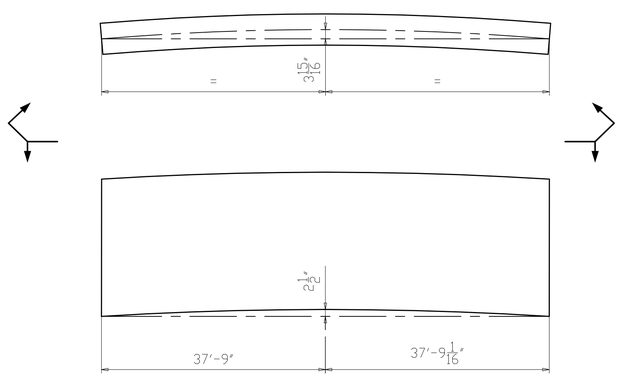

CAMBER & CURVE DIAGRAM

NO.	DATE	REMARKS	BY

REVISIONS

Veritas STEEL
2-EAU CLAIRE, WI 3-WAUSAU, WI 4-PALATKA, FL

STRUCTURE	CUY-010-1978R, OH-10 EASTBOUND OVER GCRTA BLUE AND GREEN LINES
LOCATION	CLEVELAND, OHIO CUYAHOGA COUNTY
PROJECT NO.	17-3000
ENGINEER	MICHAEL BAKER INTERNATIONAL
CONTRACTOR	KOKOSING
ITEM	GIRDER 116D3
SURFACE PREP.	SEE P101 OPEN HOLES 1 1/16"Ø (U.N.O.)
PAINT	SEE P101

APPROVAL	DRAWN AM 06/05/19	SHEET NO.	PLANT	ORDER NO.
SHOP	CHECKED DP 06/20/19	116AB	3	317023A-20

LINE	SHIP MARK	NO. OF PCS.	ASS'Y MARK	MATERIAL						
				SHAPE	LENGTH FT.	LENGTH IN.	MATERIAL SPEC.	ITEM NO.	REMARKS	
1	116D3	ONE		GIRDER						21938
2		1	116TF	PL 1 x 20	75	6 1/16	A709-50WT2	1040	CVN	5134
3		1	116WB	PL 5/8 x 56	75	6 1/16	A709-50WT2	1046	CVN	8985
4		1	116BF	PL 1 1/8 x 24	75	6 1/16	A709-50WT2	1052	CVN	6931
5		4	x103g	PL 1/2 x 8	4	8	A709-50WT2	1092	CVN	254
6		1	x103k	PL 1/2 x 8	4	8	A709-50WT2	1094	CVN	63
7		9	x103m	PL 1/2 x 8	4	8	A709-50WT2	1093	CVN	571

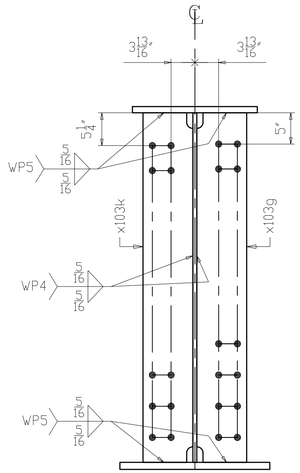

SECTION A
(INTERMEDIATE K-FRAME
& LEAN ON BRACING)

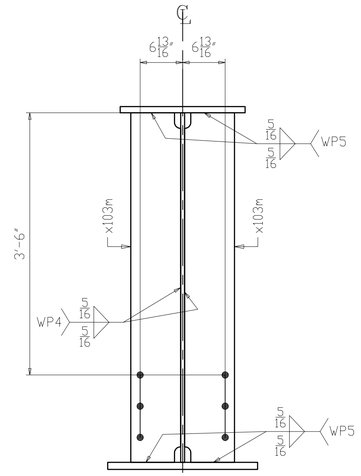

SECTION B
(UTILITY SUPPORT)

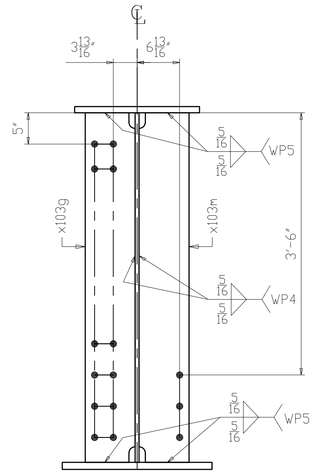

SECTION C
(INTERMEDIATE K-FRAME
& UTILITY SUPPORT)

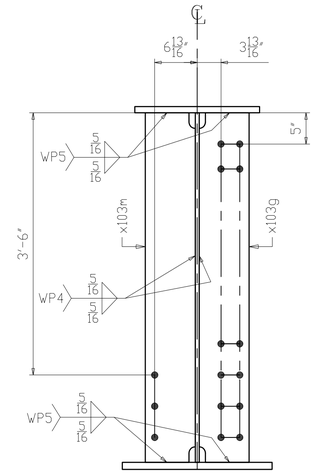

SECTION D
(INTERMEDIATE K-FRAME
& UTILITY SUPPORT)

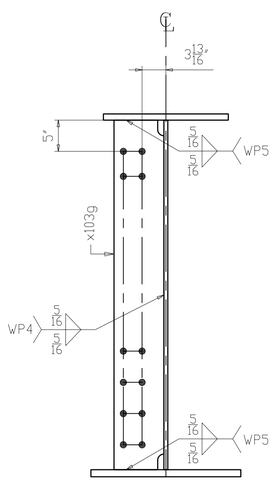

SECTION E
(INTERMEDIATE K-FRAME)

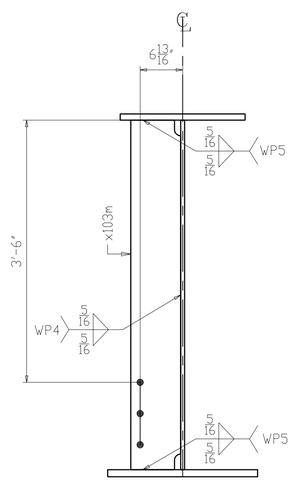

SECTION F
(UTILITY SUPPORT)

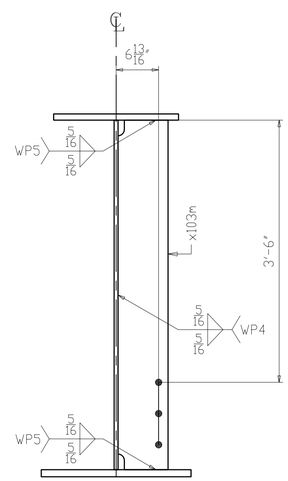

SECTION G
(UTILITY SUPPORT)

NO.	DATE	REMARKS	BY

REVISIONS

Veritas STEEL
2-EAU CLAIRE, WI 3-WAUSAU, WI 4-PALATKA, FL

TENCA 1605

STRUCTURE: CUY-010-1978R, OH-10 EASTBOUND OVER GCRTA BLUE AND GREEN LINES
LOCATION: CLEVELAND, OHIO CUYAHOGA COUNTY
PROJECT NO.: 17-3000
ENGINEER: MICHAEL BAKER INTERNATIONAL
CONTRACTOR: KOKOSING

ITEM: GIRDER 116D3
SURFACE PREP.: SEE P101 OPEN HOLES: $1\frac{1}{16}$"Ø (U.N.O.)
PAINT: SEE P101

APPROVAL	DRAWN AM 06/05/19	SHEET NO.	PLANT	ORDER NO.
SHOP	CHECKED DP 06/20/19	116B	3	317023A-20

LINE	SHIP MARK	NO. OF PCS.	ASS'Y MARK	MATERIAL SHAPE	LENGTH FT.	LENGTH IN.	MATERIAL SPEC.	ITEM NO.	REMARKS
1	117E3	ONE		GIRDER					20705
2		1	117TF	PL 1 x 20	71	11 13/16	A709-50WT2	1041	CVN 4895
3		1	117WB	PL 5/8 x 56	72	0	A709-50WT2	1047	CVN 8568
4		1	117BF	PL 1 1/8 x 24	71	11 13/16	A709-50WT2	1053	CVN 6608
5		5	x103g	PL 1/2 x 8	4	8	A709-50WT2	1092	CVN 317
6		1	x103k	PL 1/2 x 8	4	8	A709-50WT2	1094	CVN 63
7		4	x103m	PL 1/2 x 8	4	8	A709-50WT2	1093	CVN 254

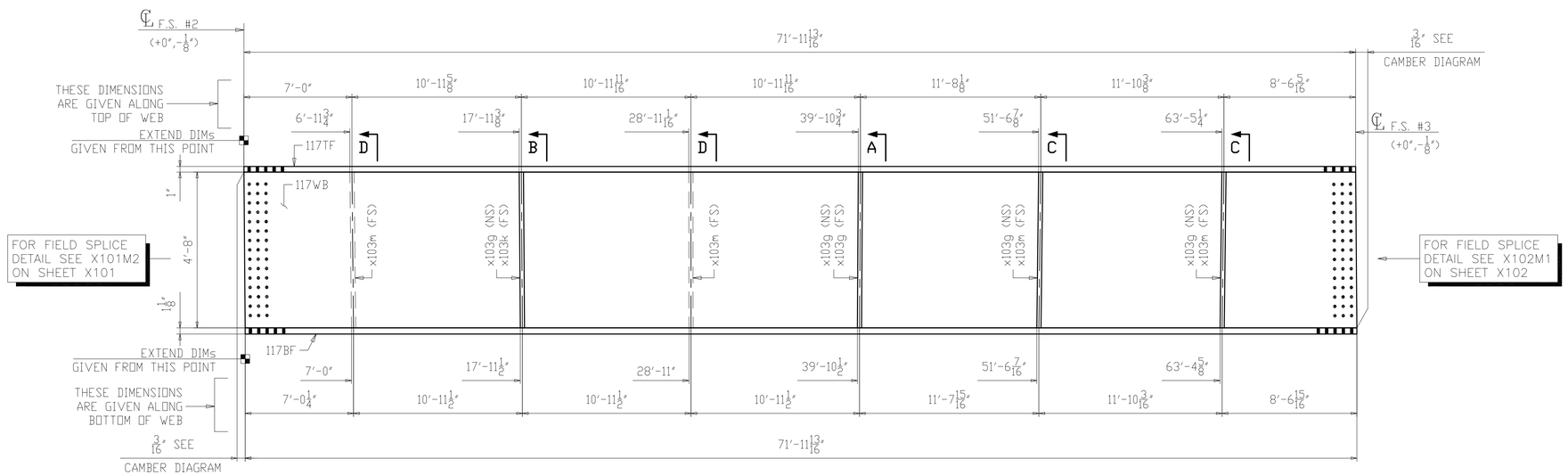

ONE ~ GIRDER ~ 117E3

1. FOR GENERAL NOTES SEE SHEET GN101.
2. FOR CAMBER AND FLANGE DIAGRAM SEE SHEET BG117.
3. FOR HORIZONTAL CURVING DIAGRAMS SEE SHEET HC103.
4. FOR GIRDER STANDARD DETAILS SEE SHEET X103.
5. FOR FIELD SPLICE DETAILS SEE X101 & X102.
6. T2 - DENOTES MATERIAL SUBJECT TO CHARPY V-NOTCH TESTING (ZONE 2).
7. ALL MATERIAL A709-50WT2 (UN).

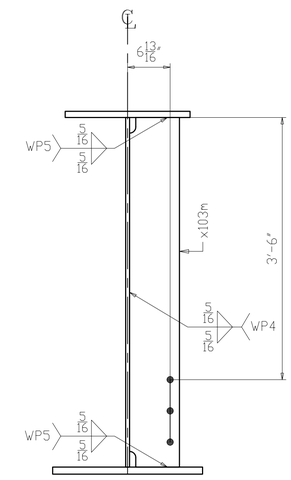

SECTION D
(UTILITY SUPPORT)

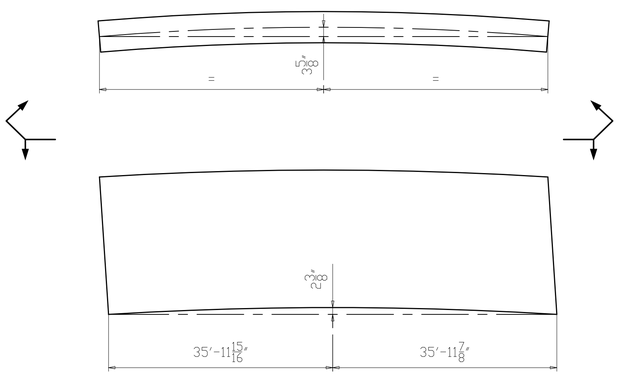

CAMBER & CURVE DIAGRAM

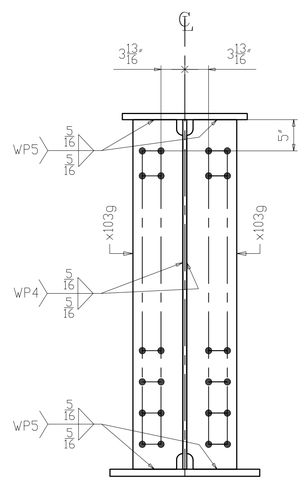

SECTION A
(INTERMEDIATE K-FRAME)

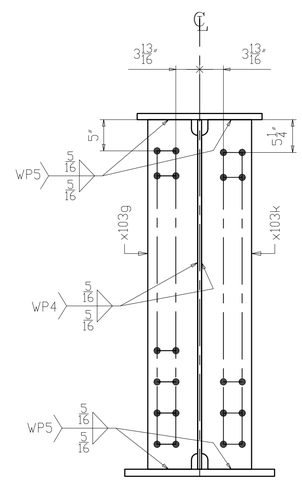

SECTION B
(INTERMEDIATE K-FRAME
& LEAN ON BRACING)

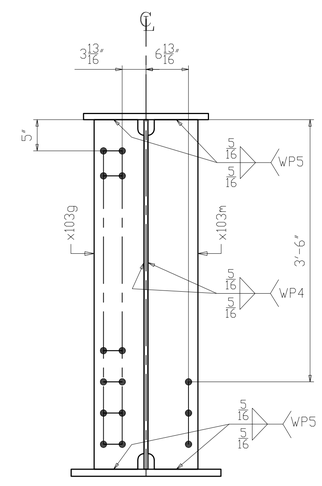

SECTION C
(INTERMEDIATE K-FRAME
& UTILITY SUPPORT)

NO.	DATE	REMARKS	BY

REVISIONS

Veritas STEEL
2-EAU CLAIRE, WI 3-WAUSAU, WI 4-PALATKA, FL
IAS NDT 1605

STRUCTURE	CUY-010-1978R, OH-10 EASTBOUND OVER GCRTA BLUE AND GREEN LINES
LOCATION	CLEVELAND, OHIO CUYAHOGA COUNTY
PROJECT NO.	17-3000
ENGINEER	MICHAEL BAKER INTERNATIONAL
CONTRACTOR	KOKOSING
ITEM	GIRDER 117E3
SURFACE PREP.	SEE P101
OPEN HOLES	1 1/16"Ø (U.N.O.)
PAINT	SEE P101

APPROVAL	DRAWN AM 06/05/19	SHEET NO.	PLANT	ORDER NO.
SHOP	CHECKED DP 06/20/19	117	3	317023A-20

LINE	SHIP MARK	NO. OF PCS.	ASS'Y MARK	MATERIAL SHAPE	LENGTH FT.	LENGTH IN.	MATERIAL SPEC.	ITEM NO.	REMARKS	
1	118F3	ONE		GIRDER						19827
2		1	118TF	PL 1 x 20	69	11 5/8	A709-50WT2	1042	CVN	4758
3		1	118WB	PL 5/8 x 56	69	11 15/16	A709-50WT2	1048	CVN	8329
4		1	118BF	PL 1 1/8 x 24	69	11 5/8	A709-50WT2	1054	CVN	6423
5		5	x103g	PL 1/2 x 8	4	8	A709-50WT2	1092	CVN	317

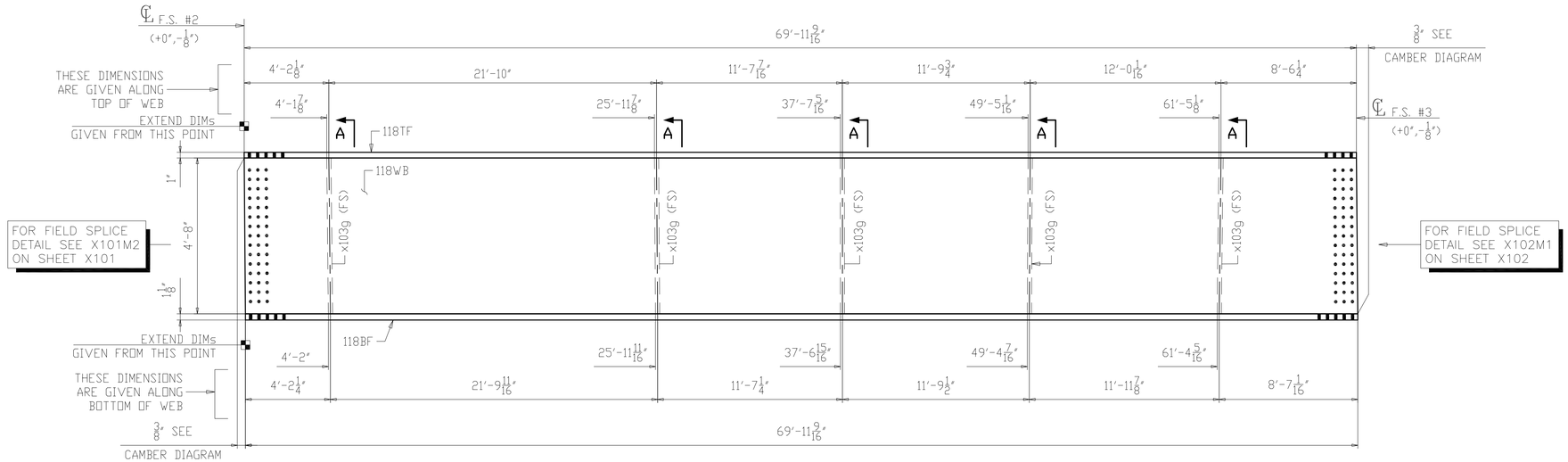

ONE ~ GIRDER ~ 118F3

1. FOR GENERAL NOTES SEE SHEET GN101.
2. FOR CAMBER AND FLANGE DIAGRAM SEE SHEET BG118.
3. FOR HORIZONTAL CURVING DIAGRAMS SEE SHEET HC103.
4. FOR GIRDER STANDARD DETAILS SEE SHEET X103.
5. FOR FIELD SPLICE DETAILS SEE X101 & X102.
6. T2 - DENOTES MATERIAL SUBJECT TO CHARPY V-NOTCH TESTING (ZONE 2).
7. ALL MATERIAL A709-50WT2 (UN).

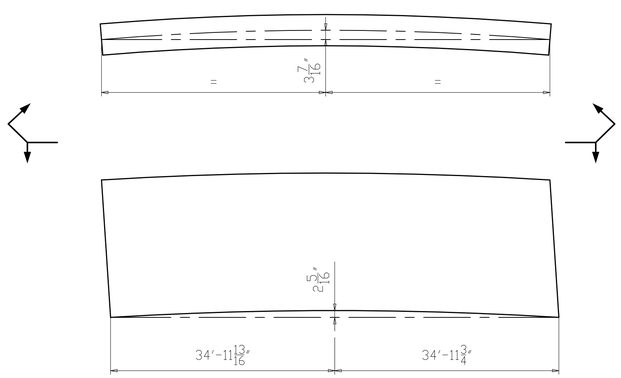

CAMBER & CURVE DIAGRAM

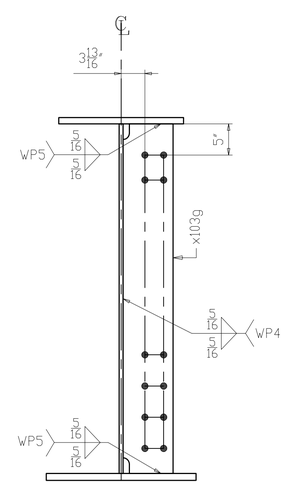

SECTION A
(INTERMEDIATE K-FRAME)

NO.	DATE	REMARKS	BY

REVISIONS

Veritas STEEL
2-EAU CLAIRE, WI 3-WAUSAU, WI 4-PALATKA, FL
IAENCA 1605

STRUCTURE: CUY-010-1978R, OH-10 EASTBOUND OVER GCRTA BLUE AND GREEN LINES
LOCATION: CLEVELAND, OHIO CUYAHOGA COUNTY
PROJECT NO.: 17-3000
ENGINEER: MICHAEL BAKER INTERNATIONAL
CONTRACTOR: KOKOSING

ITEM: GIRDER 118F3
SURFACE PREP.: SEE P101 OPEN HOLES: 1 1/16"Ø (U.N.O.)
PAINT: SEE P101

APPROVAL	DRAWN AM 06/05/19	SHEET NO.	PLANT	ORDER NO.
SHOP	CHECKED DP 06/20/19	118	3	317023A-20

LINE	SHIP MARK	NO. OF PCS.	ASS'Y MARK	MATERIAL SHAPE	LENGTH FT.	LENGTH IN.	MATERIAL SPEC.	ITEM NO.	REMARKS
1	119A4	ONE		GIRDER					22659
2		1	119TF	PL 1 3/4 x 26	48	1 3/8	A709-50WT2	1055	CVN 7443
3		1	119WB	PL 5/8 x 56	48	1 11/16	A709-50WT2	1061	CVN 5729
4		1	119BF	PL 2 1/8 x 26	48	1 3/8	A709-50WT2	1067	CVN 9038
5		1	x103d	PL 1 1/8 x 9	4	8	A709-50WT2	1091	CVN MIE 161
6		1	x103f	PL 1 1/8 x 9	4	8	A709-50WT2	1091	CVN MIE 161
7		2	x103g	PL 1/2 x 8	4	8	A709-50WT2	1092	CVN 127

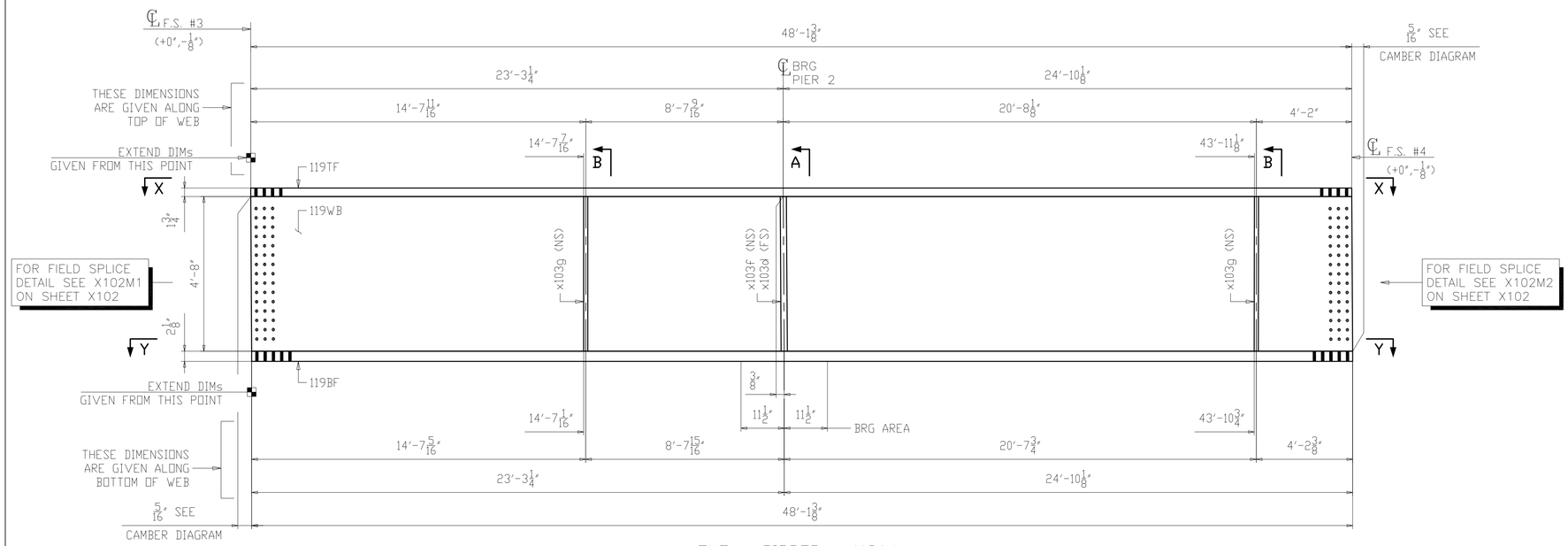

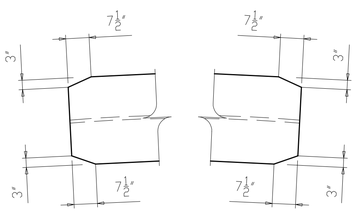

SECTION X-X

ONE ~ GIRDER ~ 119A4

1. FOR GENERAL NOTES SEE SHEET GN101.
2. FOR CAMBER AND FLANGE DIAGRAM SEE SHEET BG119.
3. FOR HORIZONTAL CURVING DIAGRAMS SEE SHEET HC104.
4. FOR GIRDER STANDARD DETAILS SEE SHEET X103.
5. FOR FIELD SPLICE DETAILS SEE X102.
6. T2 - DENOTES MATERIAL SUBJECT TO CHARPY V-NOTCH TESTING (ZONE 2).
7. ALL MATERIAL A709-50WT2 (UN).
8. BRG AREA - DENOTES AREA TO BE FLAT AND TRUE TO RECEIVE SOLE PLATE.

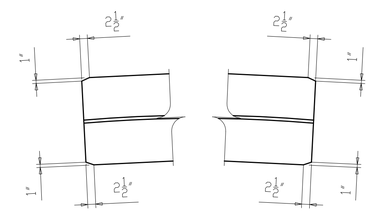

SECTION Y-Y

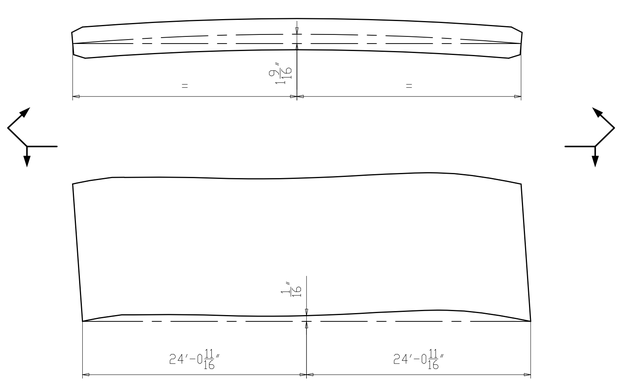

CAMBER & CURVE DIAGRAM

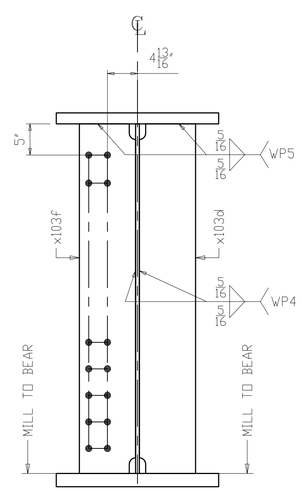

SECTION A
(K-FRAME PIER 2)

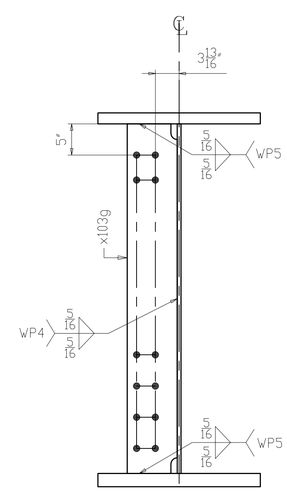

SECTION B
(INTERMEDIATE K-FRAME)

NO.	DATE	REMARKS	BY

REVISIONS

Veritas STEEL
2-EAU CLAIRE, WI 3-WAUSAU, WI 4-PALATKA, FL
IAS NDT 1605

STRUCTURE	CUY-010-1978R, OH-10 EASTBOUND OVER GCRTA BLUE AND GREEN LINES
LOCATION	CLEVELAND, OHIO CUYAHOGA COUNTY
PROJECT NO.	17-3000
ENGINEER	MICHAEL BAKER INTERNATIONAL
CONTRACTOR	KOKOSING
ITEM	GIRDER 119A4
SURFACE PREP.	SEE P101
OPEN HOLES	1 1/16"Ø (U.N.O.)
PAINT	SEE P101

APPROVAL	DRAWN AM 05/17/19	SHEET NO.	PLANT	ORDER NO.
SHOP	CHECKED DP 06/05/19	119	3	317023A-20

LINE	SHIP MARK	NO. OF PCS.	ASS'Y MARK	MATERIAL SHAPE	LENGTH FT.	LENGTH IN.	MATERIAL SPEC.	ITEM NO.	REMARKS
1	120B4	ONE		GIRDER					23729
2		1	120TF	PL 1 3/4 x 26	49	10 9/16	A709-50WT2	1056	CVN 7716
3		1	120WB	PL 5/8 x 56	49	11 1/16	A709-50WT2	1062	CVN 5941
4		1	120BF	PL 2 1/8 x 26	49	10 9/16	A709-50WT2	1068	CVN 9370
5		2	x103F	PL 1 1/8 x 9	4	8	A709-50WT2	1091	CVN MIE 321
6		6	x103g	PL 1/2 x 8	4	8	A709-50WT2	1092	CVN 381

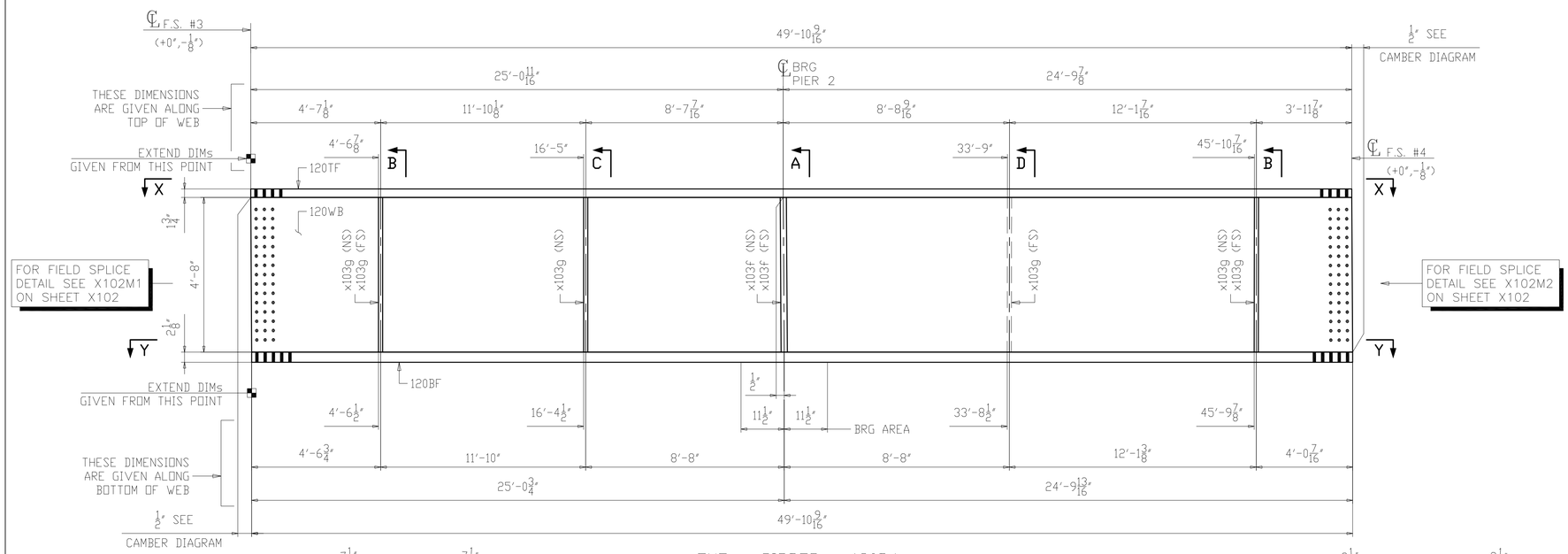

ONE ~ GIRDER ~ 120B4

1. FOR GENERAL NOTES SEE SHEET GN101.
2. FOR CAMBER AND FLANGE DIAGRAM SEE SHEET BG120.
3. FOR HORIZONTAL CURVING DIAGRAMS SEE SHEET HC104.
4. FOR GIRDER STANDARD DETAILS SEE SHEET X103.
5. FOR FIELD SPLICE DETAILS SEE X102.
6. T2 - DENOTES MATERIAL SUBJECT TO CHARPY V-NOTCH TESTING (ZONE 2).
7. ALL MATERIAL A709-50WT2 (UN).
8. BRG AREA - DENOTES AREA TO BE FLAT AND TRUE TO RECEIVE SOLE PLATE.

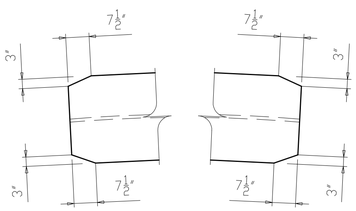

SECTION X-X

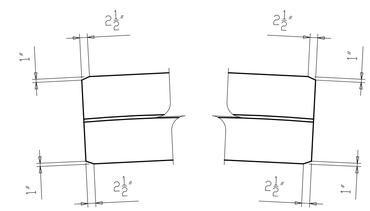

SECTION Y-Y

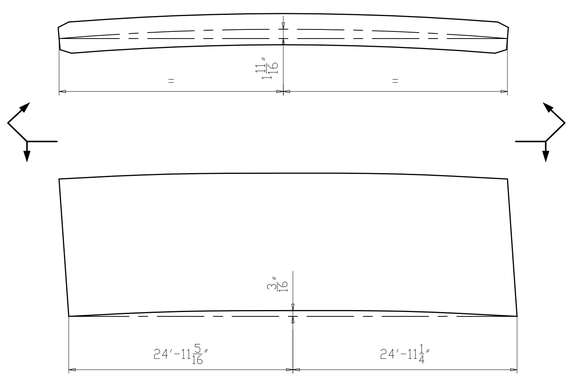

CAMBER & CURVE DIAGRAM

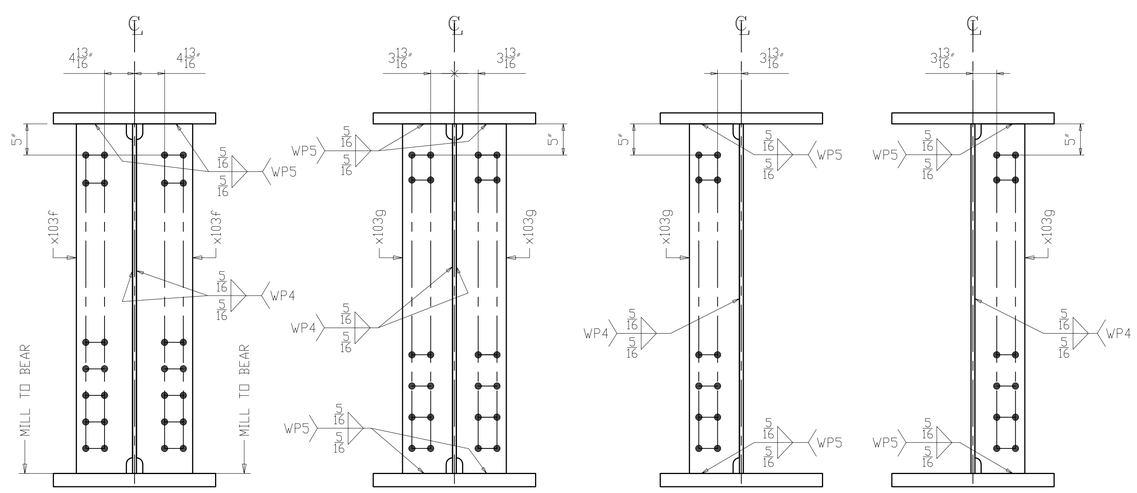

SECTION A
(K-FRAME PIER 2)

SECTION B
(INTERMEDIATE K-FRAME)

SECTION C
(INTERMEDIATE K-FRAME)

SECTION D
(INTERMEDIATE K-FRAME)

NO.	DATE	REMARKS	BY
△			

REVISIONS

Veritas STEEL
2-EAU CLAIRE, WI 3-WAUSAU, WI 4-PALATKA, FL
IAS 1605

STRUCTURE	CUY-010-1978R, OH-10 EASTBOUND OVER GCRTA BLUE AND GREEN LINES
LOCATION	CLEVELAND, OHIO CUYAHOGA COUNTY
PROJECT NO.	17-3000
ENGINEER	MICHAEL BAKER INTERNATIONAL
CONTRACTOR	KOKOSING
ITEM	GIRDER 120B4
SURFACE PREP.	SEE P101
OPEN HOLES	1 1/16"Ø (U.N.O.)
PAINT	SEE P101

APPROVAL	DRAWN AM 06/05/19	SHEET NO.	PLANT	ORDER NO.
SHOP	CHECKED DP 06/20/19	120	3	317023A-20

LINE	SHIP MARK	NO. OF PCS.	ASS'Y MARK	MATERIAL SHAPE	LENGTH FT.	LENGTH IN.	MATERIAL SPEC.	ITEM NO.	REMARKS
1	121C4	ONE		GIRDER					23685
2		1	121TF	PL 1 3/4 x 26	49	7 3/4	A709-50WT2	1057	CVN 7680
3		1	121WB	PL 5/8 x 56	49	8 3/8	A709-50WT2	1063	CVN 5914
4		1	121BF	PL 2 1/8 x 26	49	7 3/4	A709-50WT2	1069	CVN 9326
5		2	x103f	PL 1 1/8 x 9	4	8	A709-50WT2	1091	CVN MIE 321
6		5	x103g	PL 1/2 x 8	4	8	A709-50WT2	1092	CVN 317
7		2	x103m	PL 1/2 x 8	4	8	A709-50WT2	1093	CVN 127

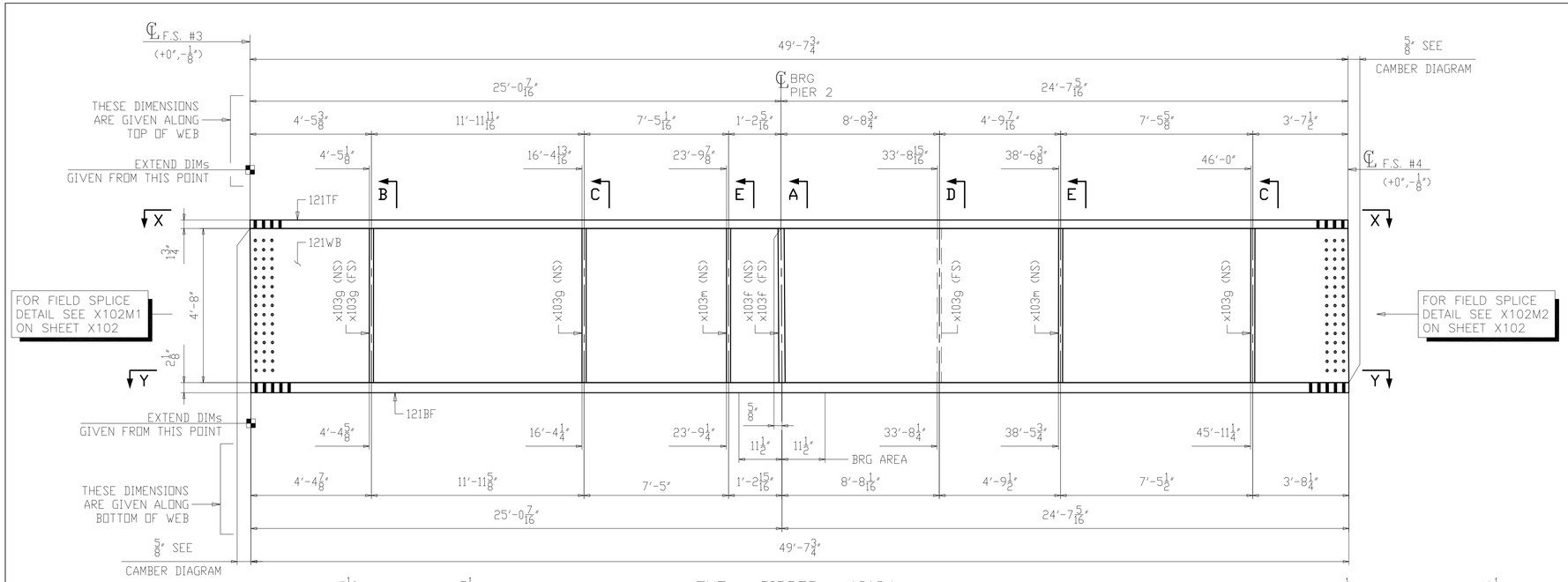

ONE ~ GIRDER ~ 121C4

1. FOR GENERAL NOTES SEE SHEET GN101.
2. FOR CAMBER AND FLANGE DIAGRAM SEE SHEET BG121.
3. FOR HORIZONTAL CURVING DIAGRAMS SEE SHEET HC104.
4. FOR GIRDER STANDARD DETAILS SEE SHEET X103.
5. FOR FIELD SPLICE DETAILS SEE X102.
6. T2 - DENOTES MATERIAL SUBJECT TO CHARPY V-NOTCH TESTING (ZONE 2).
7. ALL MATERIAL A709-50WT2 (UN).
8. BRG AREA - DENOTES AREA TO BE FLAT AND TRUE TO RECEIVE SOLE PLATE.

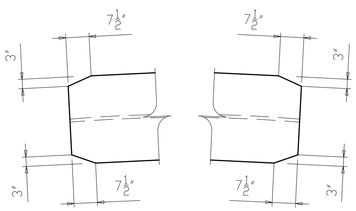

SECTION X-X

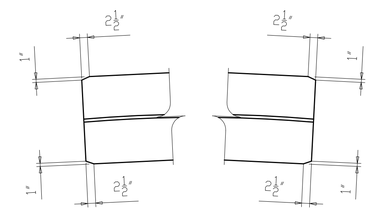

SECTION Y-Y

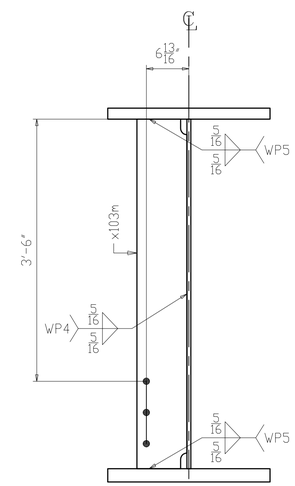

SECTION E
(UTILITY SUPPORT)

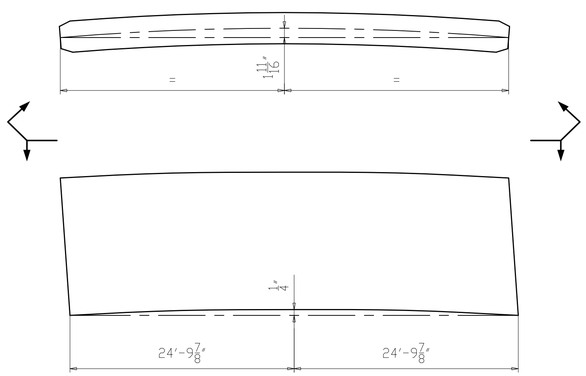

CAMBER & CURVE DIAGRAM

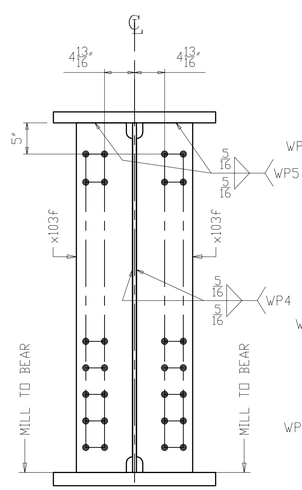

SECTION A
(K-FRAME PIER 2)

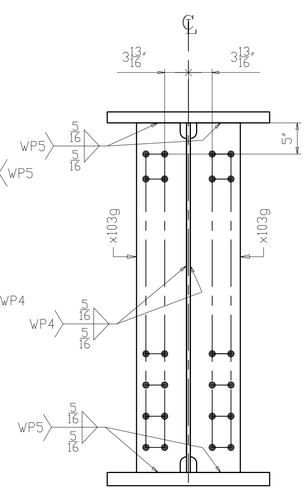

SECTION B
(INTERMEDIATE K-FRAME)

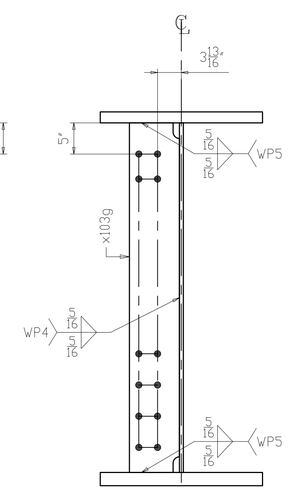

SECTION C
(INTERMEDIATE K-FRAME)

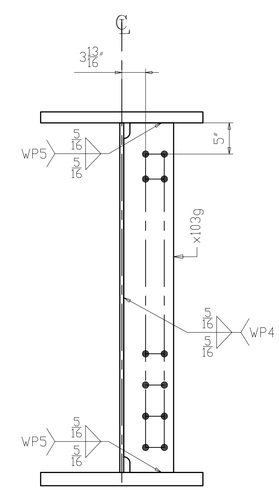

SECTION D
(INTERMEDIATE K-FRAME)

NO.	DATE	REMARKS	BY

REVISIONS

Veritas STEEL
2-EAU CLAIRE, WI 3-WAUSAU, WI 4-PALATKA, FL
IENCA 1605

STRUCTURE	CUY-010-1978R, OH-10 EASTBOUND OVER GCRTA BLUE AND GREEN LINES
LOCATION	CLEVELAND, OHIO CUYAHOGA COUNTY
PROJECT NO.	17-3000
ENGINEER	MICHAEL BAKER INTERNATIONAL
CONTRACTOR	KOKOSING
ITEM	GIRDER 121C4
SURFACE PREP.	SEE P101 OPEN HOLES 1 1/16"ø (U.N.O.)
PAINT	SEE P101

APPROVAL	DRAWN AM 06/05/19	SHEET NO.	PLANT	ORDER NO.
SHOP	CHECKED DP 06/20/19	121	3	317023A-20

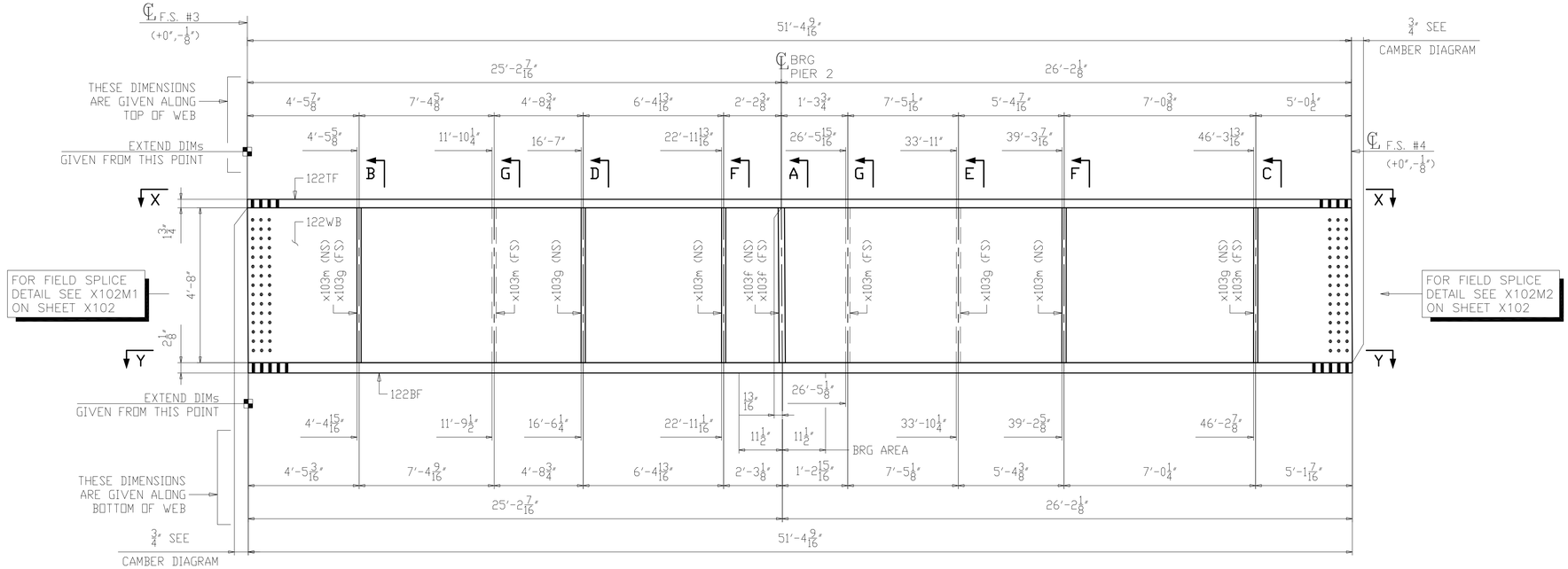

ONE ~ GIRDER ~ 122D4

1. FOR GENERAL NOTES SEE SHEET GN101.
2. FOR CAMBER AND FLANGE DIAGRAM SEE SHEET BG122.
3. FOR HORIZONTAL CURVING DIAGRAMS SEE SHEET HC104.
4. FOR GIRDER STANDARD DETAILS SEE SHEET X103.
5. FOR FIELD SPLICE DETAILS SEE X102.
6. T2 - DENOTES MATERIAL SUBJECT TO CHARPY V-NOTCH TESTING (ZONE 2).
7. ALL MATERIAL A709-50WT2 (UN).
8. BRG AREA - DENOTES AREA TO BE FLAT AND TRUE TO RECEIVE SOLE PLATE.

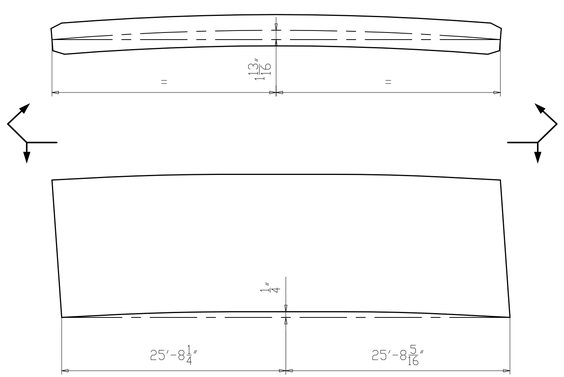

CAMBER & CURVE DIAGRAM

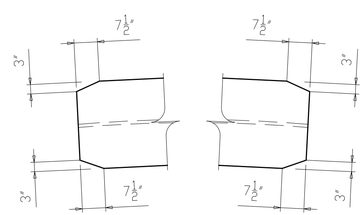

SECTION X-X

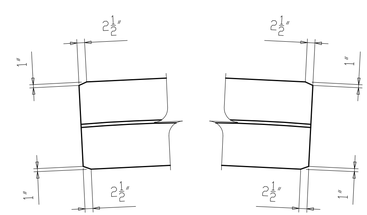

SECTION Y-Y

NO.	DATE	REMARKS	BY

REVISIONS

Veritas STEEL
2-EAU CLAIRE, WI 3-WAUSAU, WI 4-PALATKA, FL
TENCA 1605

STRUCTURE	CUY-010-1978R, OH-10 EASTBOUND OVER GCRTA BLUE AND GREEN LINES
LOCATION	CLEVELAND, OHIO CUYAHOGA COUNTY
PROJECT NO.	17-3000
ENGINEER	MICHAEL BAKER INTERNATIONAL
CONTRACTOR	KOKOSING
ITEM	GIRDER 122D4
SURFACE PREP.	SEE P101 OPEN HOLES 1 1/16"ø (U.N.O.)
PAINT	SEE P101

APPROVAL	DRAWN AM 06/05/19	SHEET NO.	PLANT	ORDER NO.
SHOP	CHECKED DP 06/20/19	122AB	3	317023A-20

LINE	SHIP MARK	NO. OF PCS.	ASS'Y MARK	MATERIAL					
				SHAPE	LENGTH FT.	LENGTH IN.	MATERIAL SPEC.	ITEM NO.	REMARKS
1	122D4	ONE		GIRDER					24679
2		1	122TF	PL 1 3/4 x 26	51	4 9/16	A709-50WT2	1058	CVN 7949
3		1	122WB	PL 5/8 x 56	51	5 5/16	A709-50WT2	1064	CVN 6122
4		1	122BF	PL 2 1/8 x 26	51	4 9/16	A709-50WT2	1070	CVN 9652
5		2	x103f	PL 1 1/8 x 9	4	8	A709-50WT2	1091	CVN M1E 321
6		4	x103g	PL 1/2 x 8	4	8	A709-50WT2	1092	CVN 254
7		6	x103m	PL 1/2 x 8	4	8	A709-50WT2	1093	CVN 381

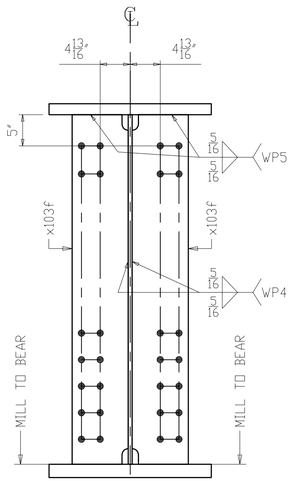

SECTION A
(K-FRAME PIER 2)

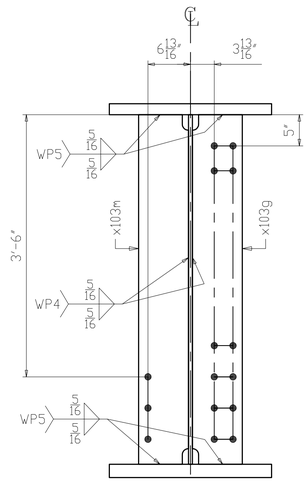

SECTION B
(INTERMEDIATE K-FRAME & UTILITY SUPPORT)

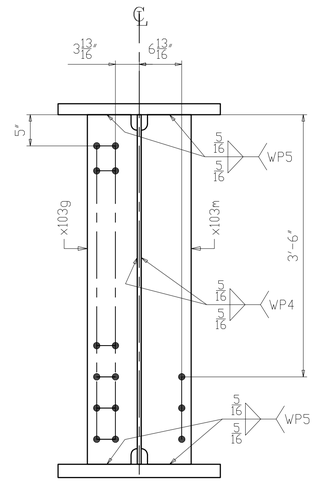

SECTION C
(INTERMEDIATE K-FRAME & UTILITY SUPPORT)

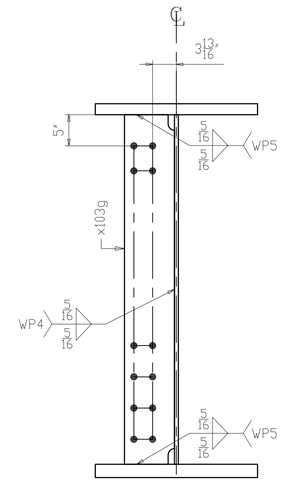

SECTION D
(INTERMEDIATE K-FRAME)

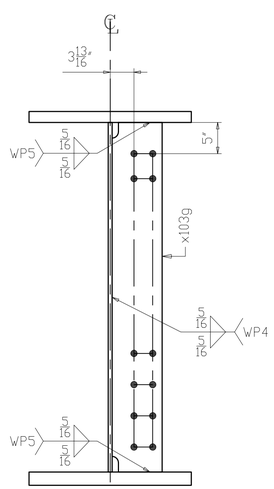

SECTION E
(INTERMEDIATE K-FRAME)

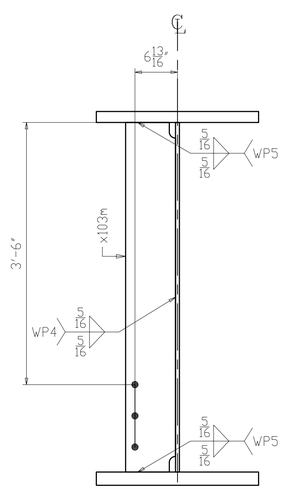

SECTION F
(UTILITY SUPPORT)

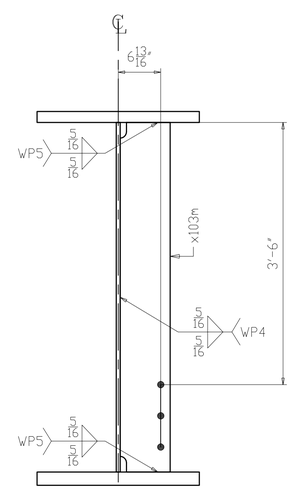

SECTION G
(UTILITY SUPPORT)

NO.	DATE	REMARKS	BY

REVISIONS

Veritas STEEL
2-EAU CLAIRE, WI 3-WAUSAU, WI 4-PALATKA, FL
TENCA 1605

STRUCTURE: CUY-010-1978R, OH-10 EASTBOUND OVER GCRTA BLUE AND GREEN LINES
LOCATION: CLEVELAND, OHIO CUYAHOGA COUNTY
PROJECT NO.: 17-3000
ENGINEER: MICHAEL BAKER INTERNATIONAL
CONTRACTOR: KOKOSING

ITEM: GIRDER 122D4
SURFACE PREP.: SEE P101 OPEN HOLES: $1\frac{1}{16}$"Ø (U.N.O.)
PAINT: SEE P101

APPROVAL	DRAWN AM 06/05/19	SHEET NO.	PLANT	ORDER NO.
SHOP	CHECKED DP 06/20/19	122B	3	317023A-20

LINE	SHIP MARK	NO. OF PCS.	ASS'Y MARK	MATERIAL SHAPE	LENGTH FT.	LENGTH IN.	MATERIAL SPEC.	ITEM NO.	REMARKS
1	123E4	ONE		GIRDER					23703
2		1	123TF	PL 1 3/4 x 26	49	6 1/2	A709-50WT2	1059	CVN 7664
3		1	123WB	PL 5/8 x 56	49	7 7/16	A709-50WT2	1065	CVN 5905
4		1	123BF	PL 2 1/8 x 26	49	6 1/2	A709-50WT2	1071	CVN 9306
5		2	x103f	PL 1 1/8 x 9	4	8	A709-50WT2	1091	CVN MIE 321
6		5	x103g	PL 1/2 x 8	4	8	A709-50WT2	1092	CVN 317
7		3	x103m	PL 1/2 x 8	4	8	A709-50WT2	1093	CVN 190

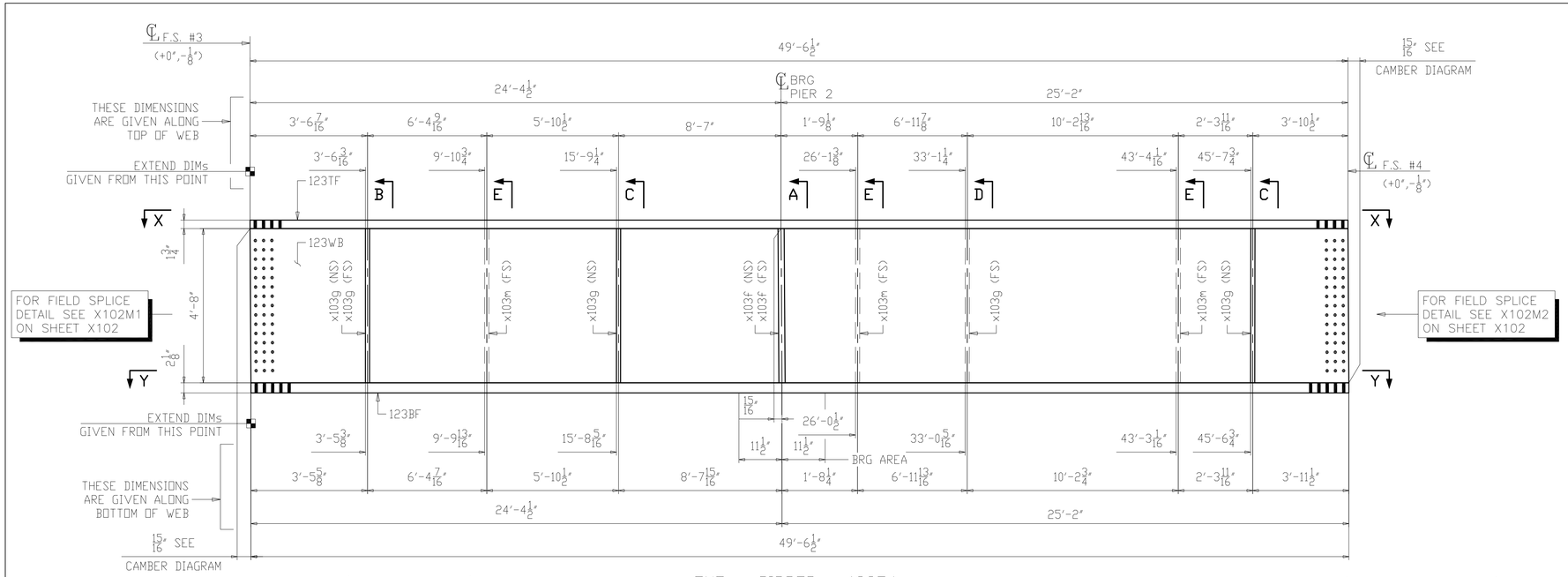

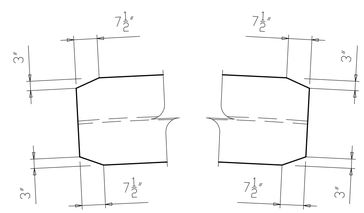

SECTION X-X

ONE ~ GIRDER ~ 123E4

1. FOR GENERAL NOTES SEE SHEET GN101.
2. FOR CAMBER AND FLANGE DIAGRAM SEE SHEET BG123.
3. FOR HORIZONTAL CURVING DIAGRAMS SEE SHEET HC104.
4. FOR GIRDER STANDARD DETAILS SEE SHEET X103.
5. FOR FIELD SPLICE DETAILS SEE X102.
6. T2 - DENOTES MATERIAL SUBJECT TO CHARPY V-NOTCH TESTING (ZONE 2).
7. ALL MATERIAL A709-50WT2 (UN).
8. BRG AREA - DENOTES AREA TO BE FLAT AND TRUE TO RECEIVE SOLE PLATE.

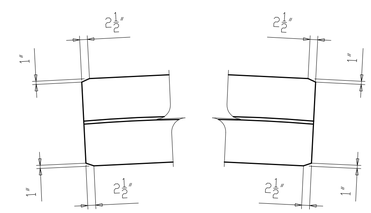

SECTION Y-Y

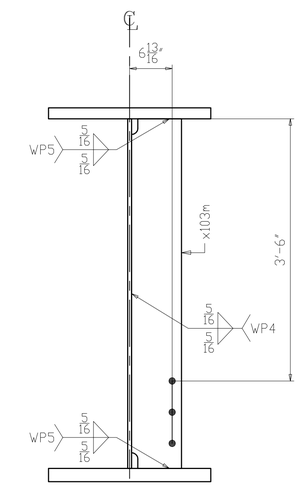

SECTION E
(UTILITY SUPPORT)

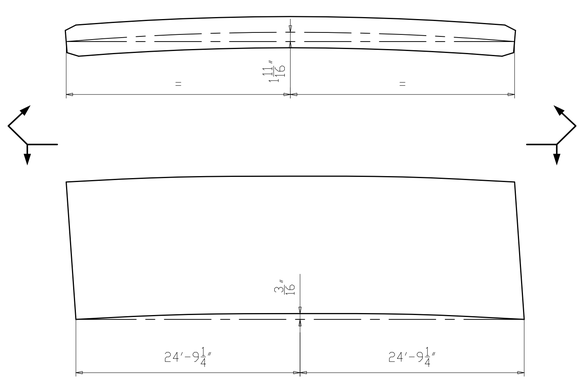

CAMBER & CURVE DIAGRAM

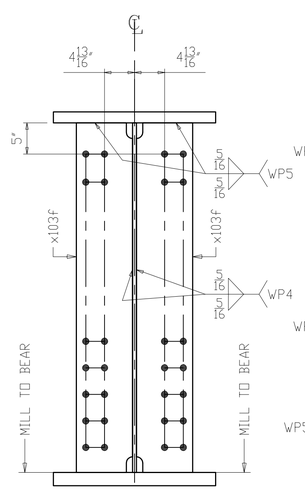

SECTION A
(K-FRAME PIER 2)

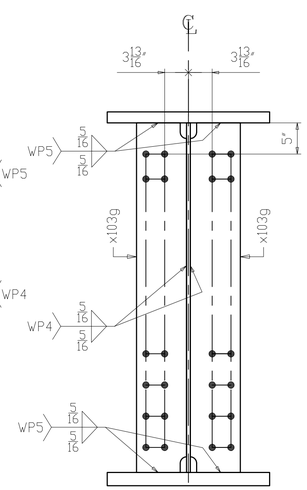

SECTION B
(INTERMEDIATE K-FRAME)

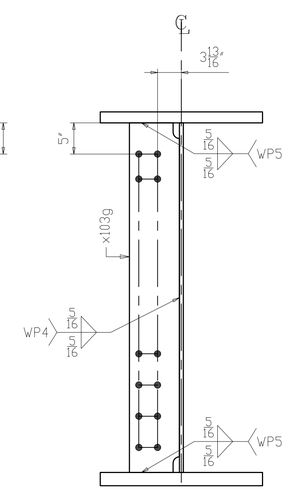

SECTION C
(INTERMEDIATE K-FRAME)

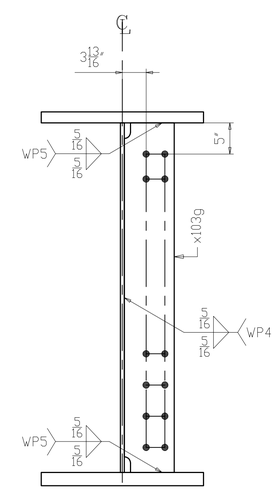

SECTION D
(INTERMEDIATE K-FRAME)

NO.	DATE	REMARKS	BY

REVISIONS

Veritas STEEL
2-EAU CLAIRE, WI 3-WAUSAU, WI 4-PALATKA, FL
IENCA 1605

STRUCTURE	CUY-010-1978R, OH-10 EASTBOUND OVER GCRTA BLUE AND GREEN LINES
LOCATION	CLEVELAND, OHIO CUYAHOGA COUNTY
PROJECT NO.	17-3000
ENGINEER	MICHAEL BAKER INTERNATIONAL
CONTRACTOR	KOKOSING
ITEM	GIRDER 123E4
SURFACE PREP.	SEE P101 OPEN HOLES 1 1/16"Ø (U.N.O.)
PAINT	SEE P101

APPROVAL	DRAWN AM 06/05/19	SHEET NO.	PLANT	ORDER NO.
SHOP	CHECKED DP 06/20/19	123	3	317023A-20

LINE	SHIP MARK	NO. OF PCS.	ASS'Y MARK	MATERIAL SHAPE	LENGTH FT.	LENGTH IN.	MATERIAL SPEC.	ITEM NO.	REMARKS
1	124F4	ONE		GIRDER					22359
2		1	124TF	PL 1 3/4 x 26	47	5 3/8	A709-50WT2	1060	CVN 7340
3		1	124WB	PL 5/8 x 56	47	6 7/16	A709-50WT2	1066	CVN 5657
4		1	124BF	PL 2 1/8 x 26	47	5 3/8	A709-50WT2	1072	CVN 8913
5		1	x103d	PL 1 1/8 x 9	4	8	A709-50WT2	1091	CVN MIE 161
6		1	x103f	PL 1 1/8 x 9	4	8	A709-50WT2	1091	CVN MIE 161
7		2	x103g	PL 1/2 x 8	4	8	A709-50WT2	1092	CVN 127

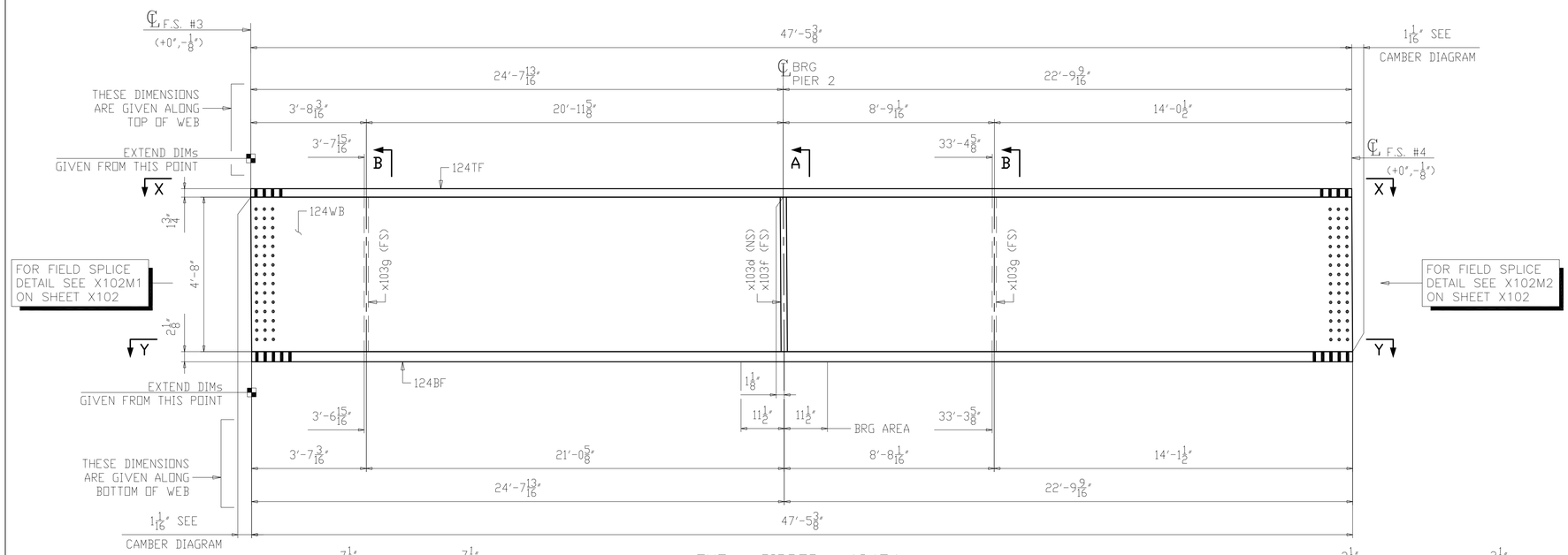

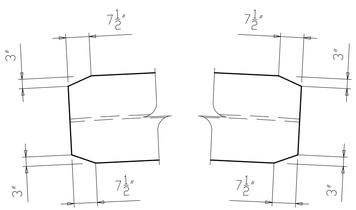

SECTION X-X

ONE ~ GIRDER ~ 124F4

1. FOR GENERAL NOTES SEE SHEET GN101.
2. FOR CAMBER AND FLANGE DIAGRAM SEE SHEET BG124.
3. FOR HORIZONTAL CURVING DIAGRAMS SEE SHEET HC104.
4. FOR GIRDER STANDARD DETAILS SEE SHEET X103.
5. FOR FIELD SPLICE DETAILS SEE X102.
6. T2 - DENOTES MATERIAL SUBJECT TO CHARPY V-NOTCH TESTING (ZONE 2).
7. ALL MATERIAL A709-50WT2 (UN).
8. BRG AREA - DENOTES AREA TO BE FLAT AND TRUE TO RECEIVE SOLE PLATE.

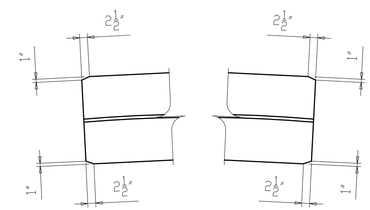

SECTION Y-Y

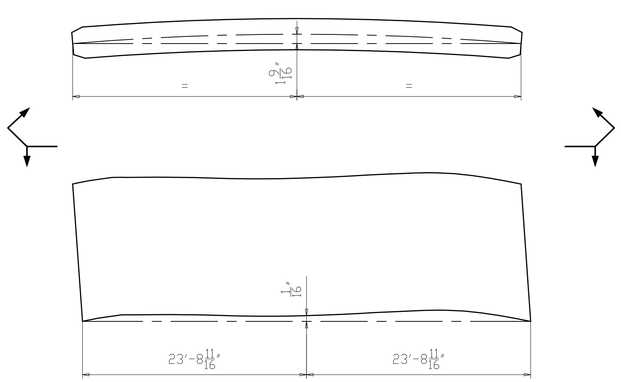

CAMBER & CURVE DIAGRAM

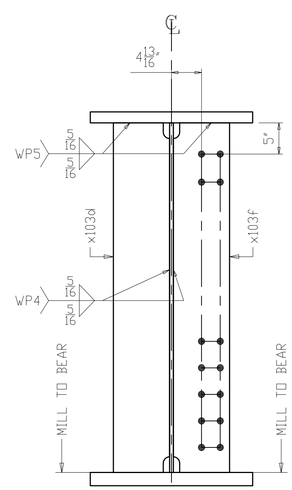

SECTION A
(K-FRAME PIER 2)

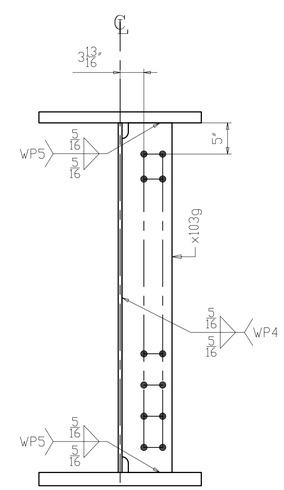

SECTION B
(INTERMEDIATE K-FRAME)

NO.	DATE	REMARKS	BY
△			

REVISIONS

Veritas STEEL
2-EAU CLAIRE, WI 3-WAUSAU, WI 4-PALATKA, FL
IENCA 1605

STRUCTURE: CUY-010-1978R, OH-10 EASTBOUND OVER GCRTA BLUE AND GREEN LINES
LOCATION: CLEVELAND, OHIO CUYAHOGA COUNTY
PROJECT NO.: 17-3000
ENGINEER: MICHAEL BAKER INTERNATIONAL
CONTRACTOR: KOKOSING

ITEM: GIRDER 124F4
SURFACE PREP.: SEE P101 OPEN HOLES: 1 1/16"Ø (U.N.O.)
PAINT: SEE P101

APPROVAL	DRAWN AM 06/05/19	SHEET NO.	PLANT	ORDER NO.
SHOP	CHECKED DP 06/20/19	124	3	317023A-20

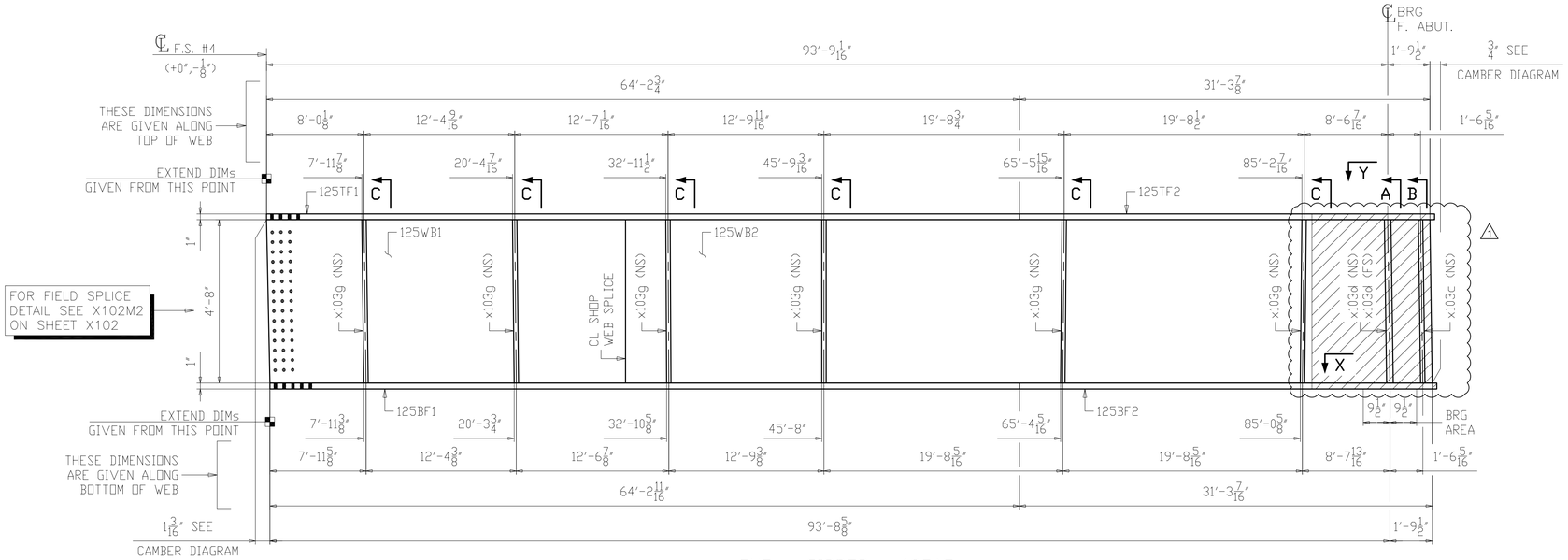

ONE ~ GIRDER ~ 125A5

(PARTIALLY PAINTED)

1. FOR GENERAL NOTES SEE SHEET GN101.
2. FOR PAINT NOTES SEE SHEET P101.
3. FOR CAMBER AND FLANGE DIAGRAM SEE SHEET BG125.
4. FOR HORIZONTAL CURVING DIAGRAMS SEE SHEET HC105.
5. FOR GIRDER STANDARD DETAILS SEE SHEET X103.
6. FOR FIELD SPLICE DETAILS SEE X102.
7. T2 - DENOTES MATERIAL SUBJECT TO CHARPY V-NOTCH TESTING (ZONE 2).
8. ALL MATERIAL A709-50WT2 (UN).
9. BRG AREA - DENOTES AREA TO BE FLAT AND TRUE TO RECEIVE SOLE PLATE.
10. ▨ - DENOTES PAINTED ZONE. △1

LINE	SHIP MARK	NO. OF PCS.	ASS'Y MARK	MATERIAL SHAPE	LENGTH FT.	LENGTH IN.	MATERIAL SPEC.	ITEM NO.	REMARKS
1	125A5	ONE		GIRDER					PART. PAINTED 26501
2		1	125TF1	PL 1 x 20	64	2 3/4	A709-50WT2	1073	CVN 4368
3		1	125TF2	PL 1 x 20	31	8 1/2	A709-50WT2	1188	CVN 2156
4		1	125WB1	PL 5/8 x 56	29	7 5/16	A709-50WT2	1194	CVN 3524
5		1	125WB2	PL 5/8 x 56	66	0	A709-50WT2	1079	CVN 7854
6		1	125BF1	PL 1 x 24	64	2 11/16	A709-50WT2	1085	CVN 5241
7		1	125BF2	PL 1 x 24	31	8 3/16	A709-50WT2	1200	CVN 2585
8		1	x103c	PL 1/2 x 9	4	8	A709-50WT2	1095	CVN 71
9		2	x103d	PL 1 1/8 x 9	4	8	A709-50WT2	1091	CVN MIE 321
10		6	x103g	PL 1/2 x 8	4	8	A709-50WT2	1092	CVN 381

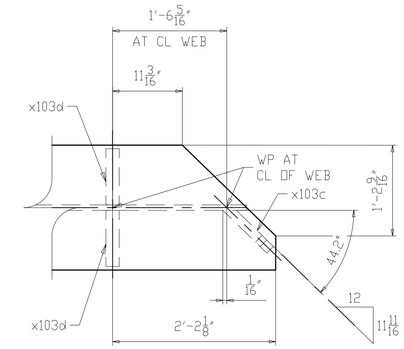

SECTION Y

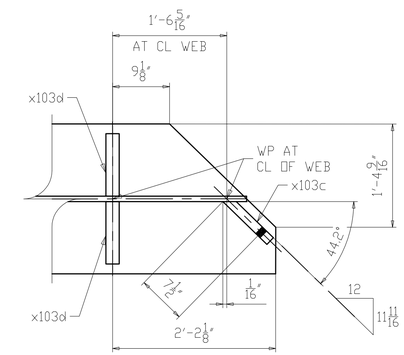

SECTION X

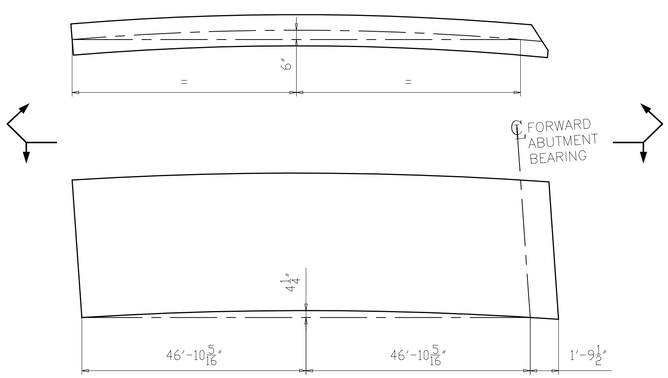

CAMBER & CURVE DIAGRAM

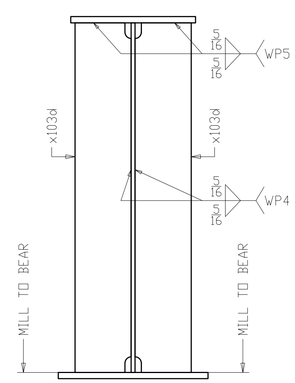

SECTION A
(BEARING FORWARD ABUTMENT)

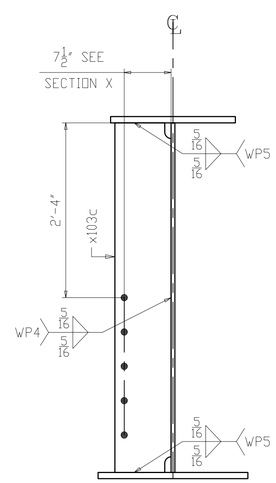

SECTION B
(FORWARD ABUTMENT K-FRAME)

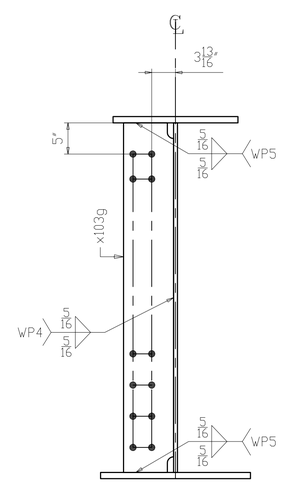

SECTION C
(INTERMEDIATE K-FRAME)

NO.	DATE	REMARKS	BY
△1	11/01/19	AS PER APPROVAL COMMENTS	DP

REVISIONS

Veritas STEEL
2-EAU CLAIRE, WI 3-WAUSAU, WI 4-PALATKA, FL

STRUCTURE	CUY-010-1978R, OH-10 EASTBOUND OVER GCRTA BLUE AND GREEN LINES
LOCATION	CLEVELAND, OHIO CUYAHOGA COUNTY
PROJECT NO.	17-3000
ENGINEER	MICHAEL BAKER INTERNATIONAL
CONTRACTOR	KOKOSING
ITEM	GIRDER 125A5
SURFACE PREP.	SEE P101 OPEN HOLES 1 1/16"Ø (U.N.O.)
PAINT	SEE P101

APPROVAL	DRAWN AM 05/17/19	SHEET NO.	PLANT	ORDER NO.
SHOP	CHECKED DP 06/05/19	125	3	317023A-20

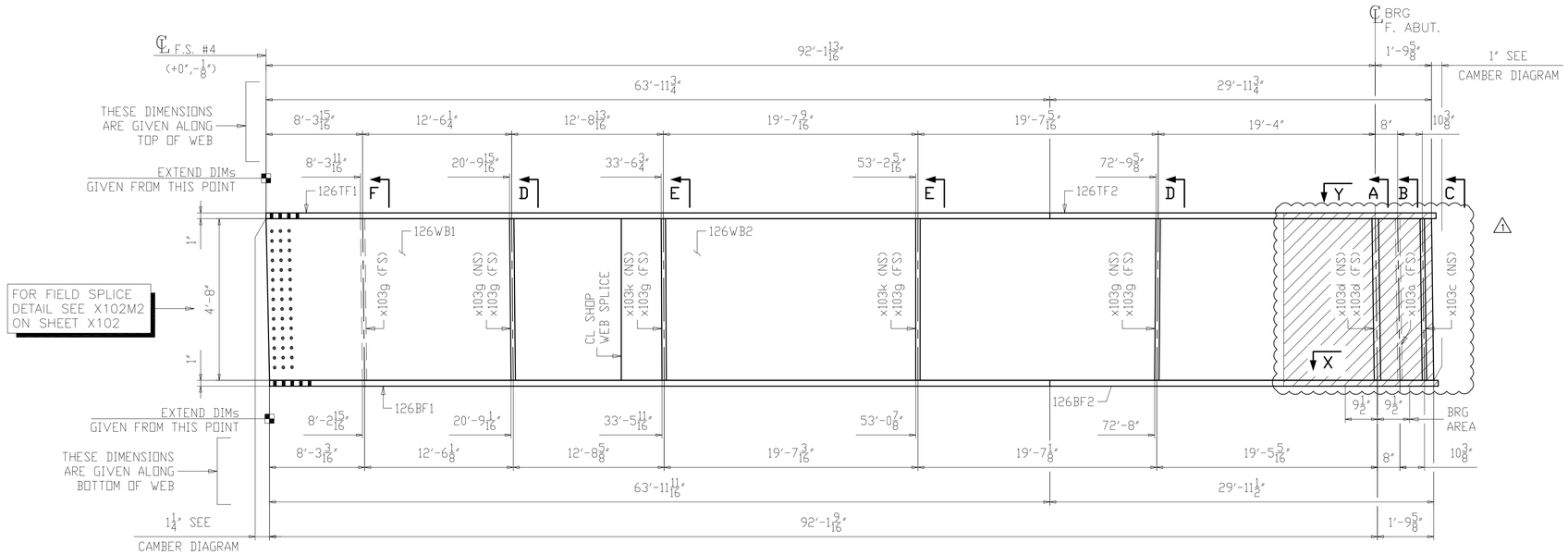

ONE ~ GIRDER ~ 126B5

(PARTIALLY PAINTED)

1. FOR GENERAL NOTES SEE SHEET GN101.
2. FOR PAINT NOTES SEE SHEET P101.
3. FOR CAMBER AND FLANGE DIAGRAM SEE SHEET BG126.
4. FOR HORIZONTAL CURVING DIAGRAMS SEE SHEET HC105.
5. FOR GIRDER STANDARD DETAILS SEE SHEET X103.
6. FOR FIELD SPLICE DETAILS SEE X102.
7. T2 - DENOTES MATERIAL SUBJECT TO CHARPY V-NOTCH TESTING (ZONE 2).
8. ALL MATERIAL A709-50WT2 (UN).
9. BRG AREA - DENOTES AREA TO BE FLAT AND TRUE TO RECEIVE SOLE PLATE.
10. - DENOTES PAINTED ZONE.

1

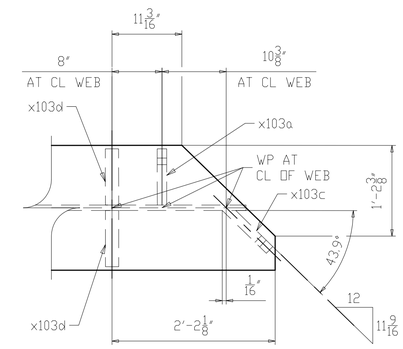

SECTION Y

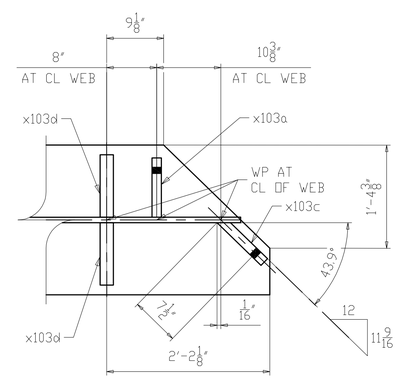

SECTION X

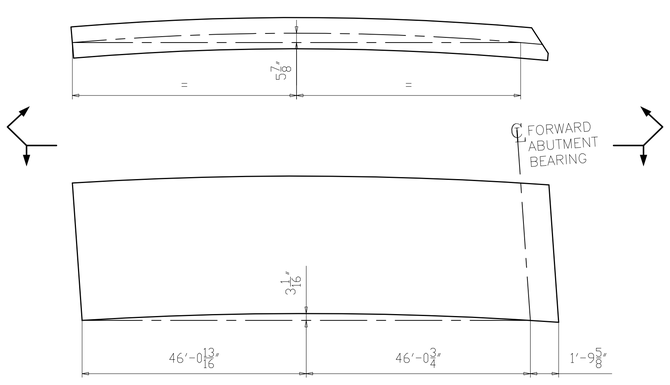

CAMBER & CURVE DIAGRAM

NO.	DATE	REMARKS	BY
1	11/01/19	AS PER APPROVAL COMMENTS	DP

REVISIONS

Veritas STEEL
2-EAU CLAIRE, WI 3-WAUSAU, WI 4-PALATKA, FL
IAS NCA 1605

STRUCTURE	CUY-010-1978R, OH-10 EASTBOUND OVER GCRTA BLUE AND GREEN LINES
LOCATION	CLEVELAND, OHIO CUYAHOGA COUNTY
PROJECT NO.	17-3000
ENGINEER	MICHAEL BAKER INTERNATIONAL
CONTRACTOR	KOKOSING
ITEM	GIRDER 126B5
SURFACE PREP.	SEE P101
OPEN HOLES	1 1/16"Ø (U.N.O.)
PAINT	SEE P101

APPROVAL	DRAWN AM 06/05/19	SHEET NO.	PLANT	ORDER NO.
SHOP	CHECKED DP 06/20/19	126AB	3	317023A-20

LINE	SHIP MARK	NO. OF PCS.	ASS'Y MARK	MATERIAL					
				SHAPE	LENGTH FT.	LENGTH IN.	MATERIAL SPEC.	ITEM NO.	REMARKS
1	126B5	ONE		GIRDER					PART. PAINTED 26335
2		1	126TF1	PL 1 x 20	63	11 3/4	A709-50WT2	1074	CVN 4351
3		1	126TF2	PL 1 x 20	30	4 5/16	A709-50WT2	1189	CVN 2064
4		1	126WB1	PL 5/8 x 56	28	0 7/16	A709-50WT2	1195	CVN 3336
5		1	126WB2	PL 5/8 x 56	66	0	A709-50WT2	1080	CVN 7854
6		1	126BF1	PL 1 x 24	63	11 11/16	A709-50WT2	1086	CVN 5220
7		1	126BF2	PL 1 x 24	30	4 1/16	A709-50WT2	1201	CVN 2476
8		1	x103a	PL 1/2 x 9	4	8	A709-50WT2	1095	CVN 71
9		1	x103c	PL 1/2 x 9	4	8	A709-50WT2	1095	CVN 71
10		2	x103d	PL 1 1/8 x 9	4	8	A709-50WT2	1091	CVN MIE 321
11		7	x103g	PL 1/2 x 8	4	8	A709-50WT2	1092	CVN 444
12		2	x103k	PL 1/2 x 8	4	8	A709-50WT2	1094	CVN 127

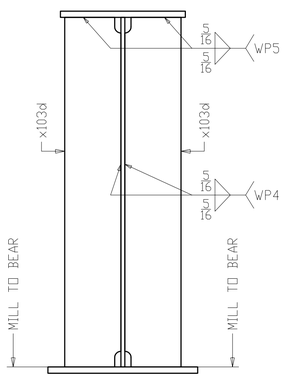

SECTION A
(BEARING FORWARD ABUTMENT)

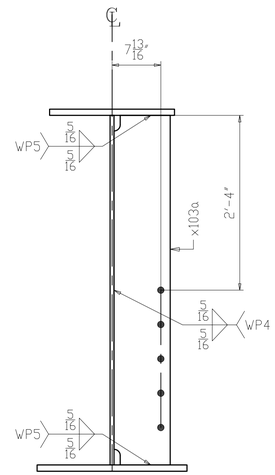

SECTION B
(FORWARD ABUTMENT K-FRAME)

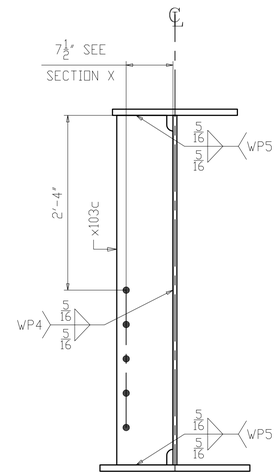

SECTION C
(FORWARD ABUTMENT K-FRAME)

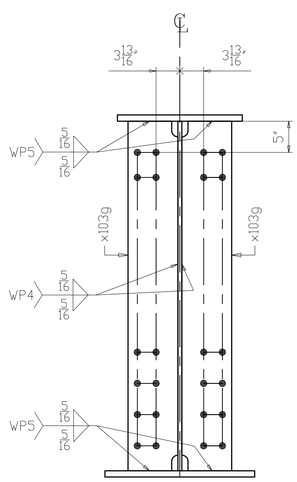

SECTION D
(INTERMEDIATE K-FRAME)

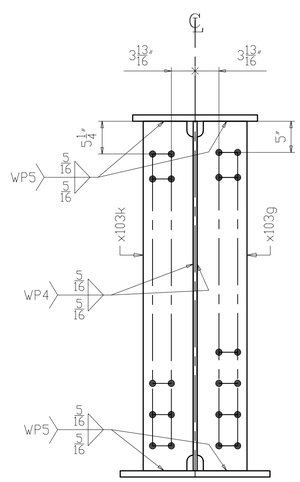

SECTION E
(INTERMEDIATE K-FRAME
& LEAN ON BRACING)

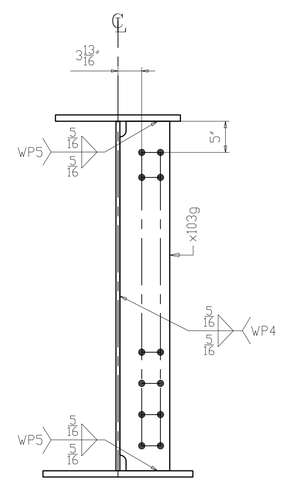

SECTION F
(INTERMEDIATE K-FRAME)

NO.	DATE	REMARKS	BY

REVISIONS

Veritas STEEL
2-EAU CLAIRE, WI 3-WAUSAU, WI 4-PALATKA, FL

STRUCTURE	CUY-010-1978R, OH-10 EASTBOUND OVER GCRTA BLUE AND GREEN LINES
LOCATION	CLEVELAND, OHIO CUYAHOGA COUNTY
PROJECT NO.	17-3000
ENGINEER	MICHAEL BAKER INTERNATIONAL
CONTRACTOR	KOKOSING
ITEM	GIRDER 126B5
SURFACE PREP.	SEE P101 OPEN HOLES $1\frac{1}{16}$"Ø (U.N.O.)
PAINT	SEE P101

APPROVAL	DRAWN AM 06/05/19	SHEET NO.	PLANT	ORDER NO.
SHOP	CHECKED DP 06/20/19	126B	3	317023A-20

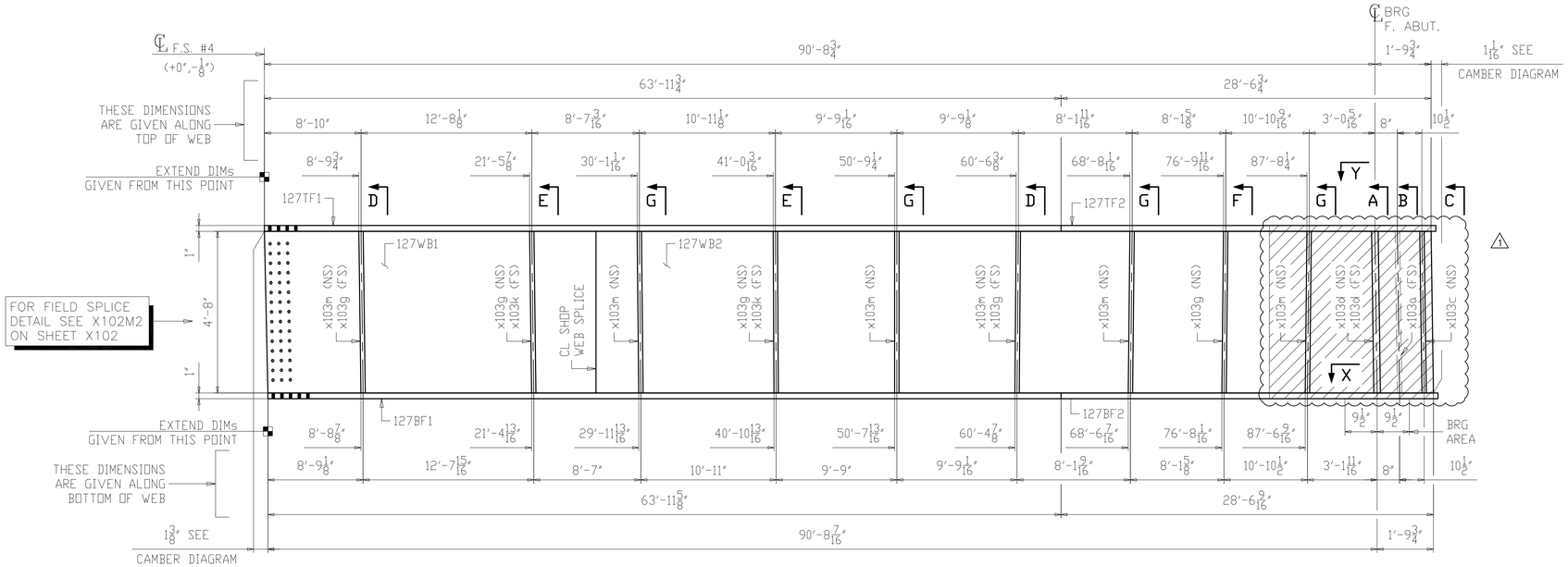

ONE ~ GIRDER ~ 127C5

(PARTIALLY PAINTED)

1. FOR GENERAL NOTES SEE SHEET GN101.
2. FOR PAINT NOTES SEE SHEET P101.
3. FOR CAMBER AND FLANGE DIAGRAM SEE SHEET BG127.
4. FOR HORIZONTAL CURVING DIAGRAMS SEE SHEET HC105.
5. FOR GIRDER STANDARD DETAILS SEE SHEET X103.
6. FOR FIELD SPLICE DETAILS SEE X102.
7. T2 - DENOTES MATERIAL SUBJECT TO CHARPY V-NOTCH TESTING (ZONE 2).
8. ALL MATERIAL A709-50WT2 (UN).
9. BRG AREA - DENOTES AREA TO BE FLAT AND TRUE TO RECEIVE SOLE PLATE.
10. - DENOTES PAINTED ZONE. 1

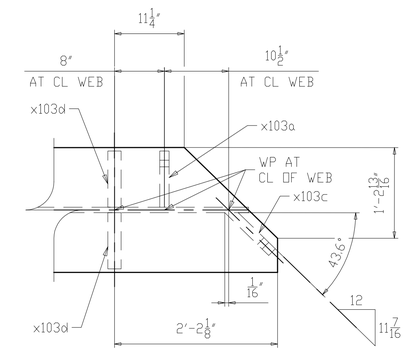

SECTION Y

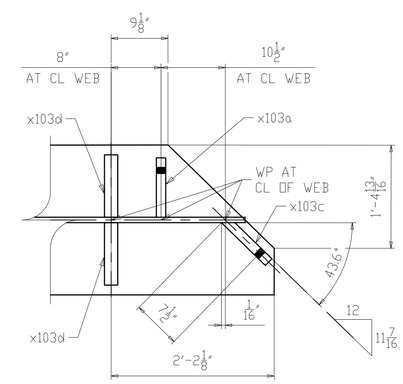

SECTION X

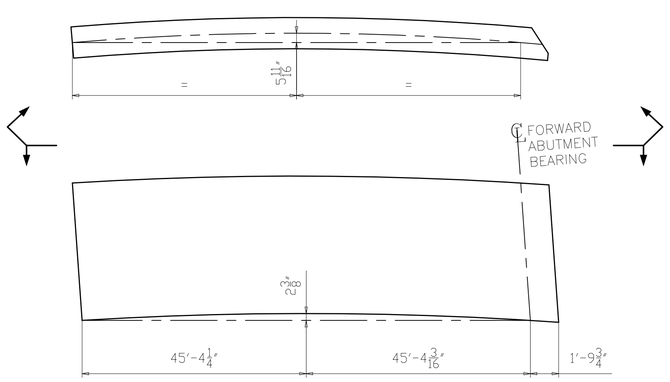

CAMBER & CURVE DIAGRAM

NO.	DATE	REMARKS	BY
1	11/01/19	AS PER APPROVAL COMMENTS	DP

REVISIONS

Veritas STEEL
2-EAU CLAIRE, WI 3-WAUSAU, WI 4-PALATKA, FL
IENCA 1605

STRUCTURE	CUY-010-1978R, OH-10 EASTBOUND OVER GCRTA BLUE AND GREEN LINES
LOCATION	CLEVELAND, OHIO CUYAHOGA COUNTY
PROJECT NO.	17-3000
ENGINEER	MICHAEL BAKER INTERNATIONAL
CONTRACTOR	KOKOSING
ITEM	GIRDER 127C5
SURFACE PREP.	SEE P101
OPEN HOLES	1 1/16"Ø (U.N.O.)
PAINT	SEE P101

APPROVAL	DRAWN AM 06/05/19	SHEET NO.	PLANT	ORDER NO.
SHOP	CHECKED DP 06/20/19	127AB	3	317023A-20

LINE	SHIP MARK	NO. OF PCS.	ASS'Y MARK	MATERIAL SHAPE	LENGTH FT.	LENGTH IN.	MATERIAL SPEC.	ITEM NO.	REMARKS
1	127C5	ONE		GIRDER					PART. PAINTED 26209
2		1	127TF1	PL 1 x 20	63	11 3/4	A709-50WT2	1075	CVN 4351
3		1	127TF2	PL 1 x 20	28	11 3/16	A709-50WT2	1190	CVN 1967
4		1	127WB1	PL 5/8 x 56	26	7 9/16	A709-50WT2	1196	CVN 3169
5		1	127WB2	PL 5/8 x 56	66	0	A709-50WT2	1081	CVN 7854
6		1	127BF1	PL 1 x 24	63	11 5/8	A709-50WT2	1087	CVN 5220
7		1	127BF2	PL 1 x 24	28	11	A709-50WT2	1202	CVN 2360
8		1	x103a	PL 1/2 x 9	4	8	A709-50WT2	1095	CVN 71
9		1	x103c	PL 1/2 x 9	4	8	A709-50WT2	1095	CVN 71
10		2	x103d	PL 1 1/8 x 9	4	8	A709-50WT2	1091	CVN M1E 321
11		5	x103g	PL 1/2 x 8	4	8	A709-50WT2	1092	CVN 317
12		2	x103k	PL 1/2 x 8	4	8	A709-50WT2	1094	CVN 127
13		6	x103m	PL 1/2 x 8	4	8	A709-50WT2	1093	CVN 381

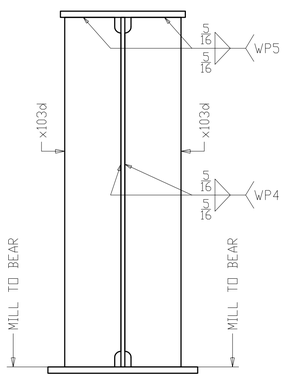

SECTION A
(BEARING FORWARD ABUTMENT)

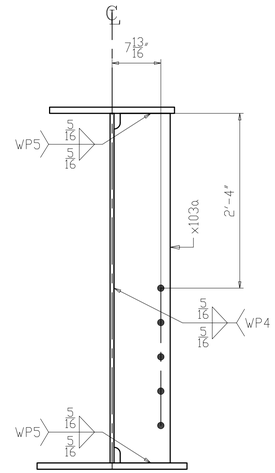

SECTION B
(FORWARD ABUTMENT K-FRAME)

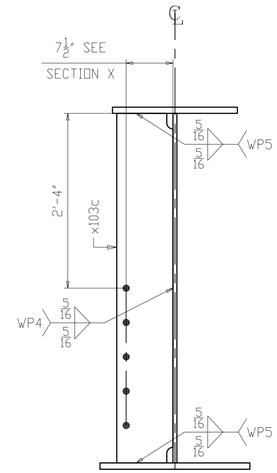

SECTION C
(FORWARD ABUTMENT K-FRAME)

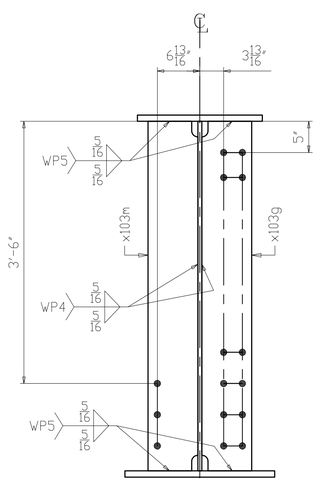

SECTION D
(INTERMEDIATE K-FRAME
& UTILITY SUPPORT)

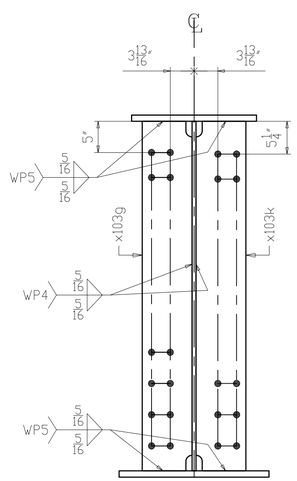

SECTION E
(INTERMEDIATE K-FRAME
& LEAN ON BRACING)

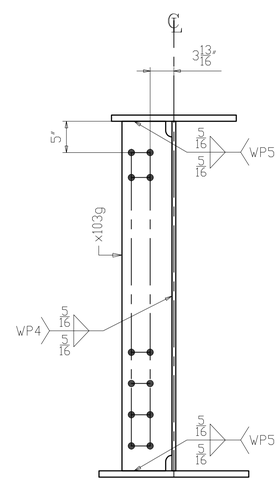

SECTION F
(INTERMEDIATE K-FRAME)

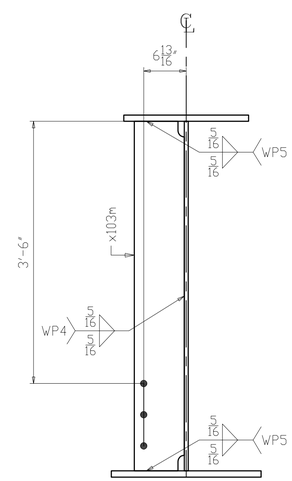

SECTION G
(UTILITY SUPPORT)

NO.	DATE	REMARKS	BY

REVISIONS

Veritas STEEL
2-EAU CLAIRE, WI 3-WAUSAU, WI 4-PALATKA, FL
TENCA 1605

STRUCTURE: CUY-010-1978R, OH-10 EASTBOUND OVER GCRTA BLUE AND GREEN LINES
LOCATION: CLEVELAND, OHIO CUYAHOGA COUNTY
PROJECT NO.: 17-3000
ENGINEER: MICHAEL BAKER INTERNATIONAL
CONTRACTOR: KOKOSING

ITEM: GIRDER 127C5
SURFACE PREP.: SEE P101 OPEN HOLES: 1 1/16"ø (U.N.O.)
PAINT: SEE P101

APPROVAL	DRAWN AM 06/05/19	SHEET NO.	PLANT	ORDER NO.
SHOP	CHECKED DP 06/20/19	127B	3	317023A-20

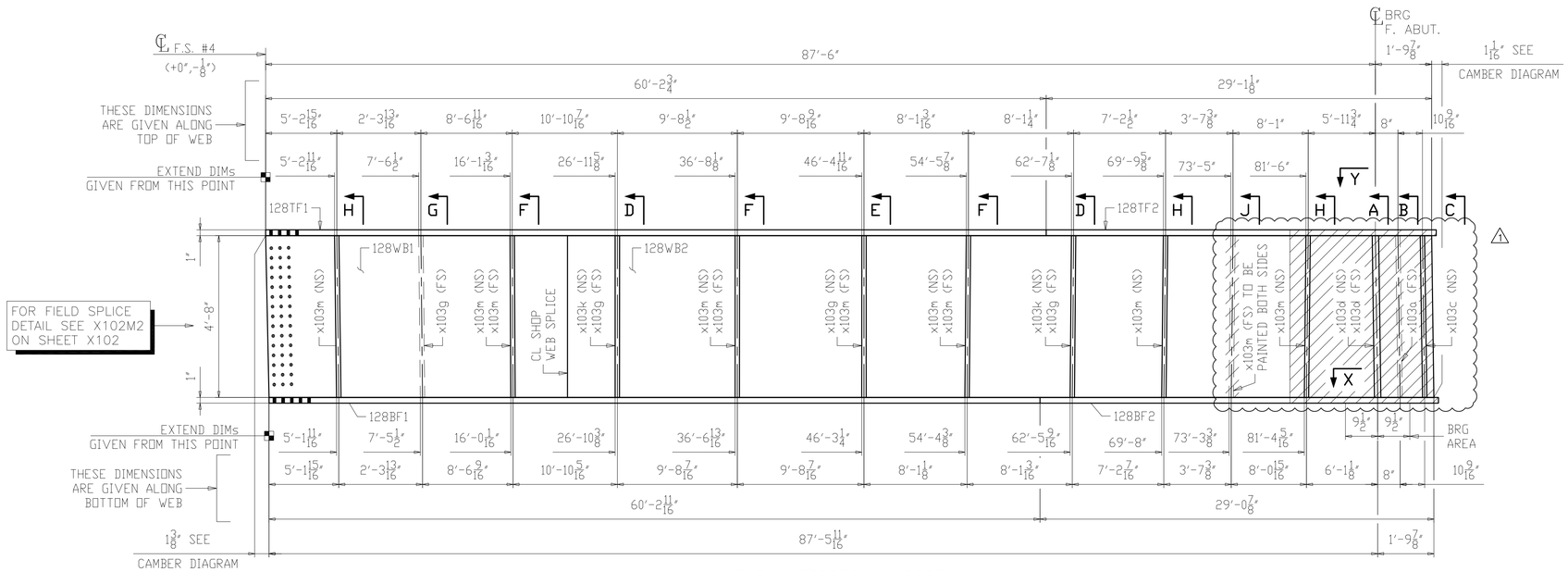

ONE ~ GIRDER ~ 128D5

(PARTIALLY PAINTED)

1. FOR GENERAL NOTES SEE SHEET GN101.
2. FOR PAINT NOTES SEE SHEET P101.
3. FOR CAMBER AND FLANGE DIAGRAM SEE SHEET BG128.
4. FOR HORIZONTAL CURVING DIAGRAMS SEE SHEET HC105.
5. FOR GIRDER STANDARD DETAILS SEE SHEET X103.
6. FOR FIELD SPLICE DETAILS SEE X102.
7. T2 - DENOTES MATERIAL SUBJECT TO CHARPY V-NOTCH TESTING (ZONE 2).
8. ALL MATERIAL A709-50WT2 (UN).
9. BRG AREA - DENOTES AREA TO BE FLAT AND TRUE TO RECEIVE SOLE PLATE.
10. - DENOTES PAINTED ZONE.

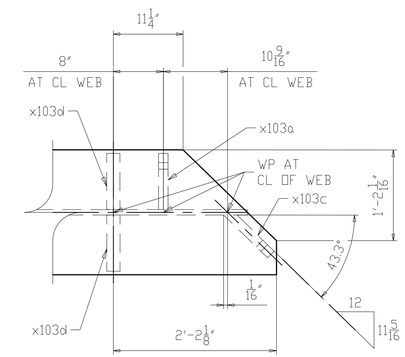

SECTION Y

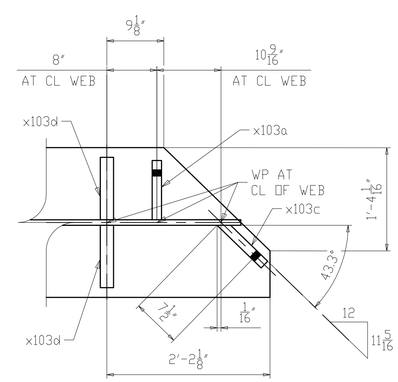

SECTION X

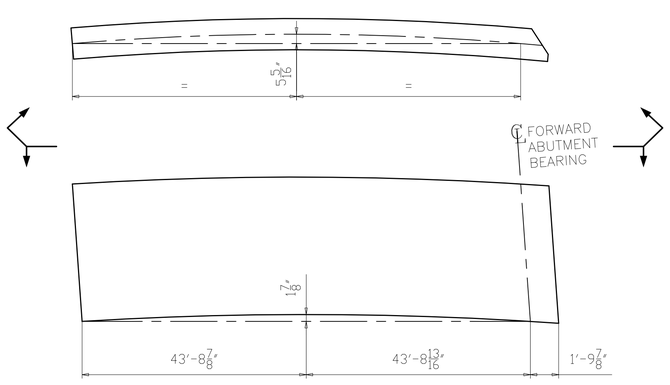

CAMBER & CURVE DIAGRAM

NO.	DATE	REMARKS	BY
1	11/01/19	AS PER APPROVAL COMMENTS	DP

REVISIONS

Veritas STEEL
2-EAU CLAIRE, WI 3-WAUSAU, WI 4-PALATKA, FL
TENCA 1605

STRUCTURE	CUY-010-1978R, OH-10 EASTBOUND OVER GCRTA BLUE AND GREEN LINES
LOCATION	CLEVELAND, OHIO CUYAHOGA COUNTY
PROJECT NO.	17-3000
ENGINEER	MICHAEL BAKER INTERNATIONAL
CONTRACTOR	KOKOSING
ITEM	GIRDER 128D5
SURFACE PREP.	SEE P101
OPEN HOLES	1 1/16"ø (U.N.O.)
PAINT	SEE P101

APPROVAL	DRAWN AM 06/05/19	SHEET NO.	PLANT	ORDER NO.
SHOP	CHECKED DP 06/20/19	128AB	3	317023A-20

LINE	SHIP MARK	NO. OF PCS.	ASS'Y MARK	MATERIAL					
				SHAPE	LENGTH FT.	LENGTH IN.	MATERIAL SPEC.	ITEM NO.	REMARKS
1	128D5	ONE		GIRDER					PART. PAINTED 25597
2		1	128TF1	PL 1 x 20	60	2 3/4	A709-50WT2	1076	CVN 4096
3		1	128TF2	PL 1 x 20	29	5 7/16	A709-50WT2	1191	CVN 2003
4		1	128WB1	PL 5/8 x 56	23	4 15/16	A709-50WT2	1197	CVN 2786
5		1	128WB2	PL 5/8 x 56	66	0	A709-50WT2	1082	CVN 7854
6		1	128BF1	PL 1 x 24	60	2 11/16	A709-50WT2	1088	CVN 4914
7		1	128BF2	PL 1 x 24	29	5 3/16	A709-50WT2	1203	CVN 2402
8		1	x103a	PL 1/2 x 9	4	8	A709-50WT2	1095	CVN 71
9		1	x103c	PL 1/2 x 9	4	8	A709-50WT2	1095	CVN 71
10		2	x103d	PL 1 1/8 x 9	4	8	A709-50WT2	1091	CVN M1E 321
11		4	x103g	PL 1/2 x 8	4	8	A709-50WT2	1092	CVN 254
12		2	x103k	PL 1/2 x 8	4	8	A709-50WT2	1094	CVN 127
13		11	x103m	PL 1/2 x 8	4	8	A709-50WT2	1093	CVN 698

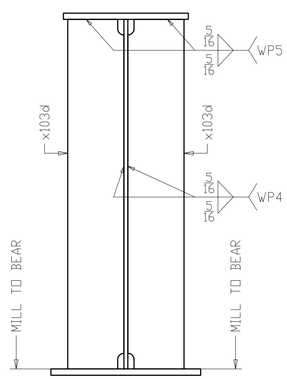

SECTION A
(BEARING FORWARD ABUTMENT)

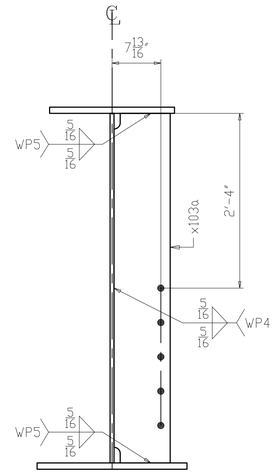

SECTION B
(FORWARD ABUTMENT K-FRAME)

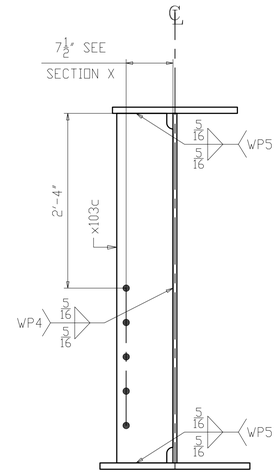

SECTION C
(FORWARD ABUTMENT K-FRAME)

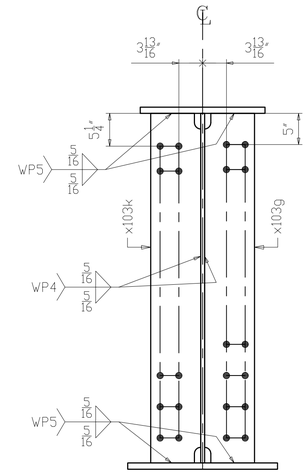

SECTION D
(INTERMEDIATE K-FRAME
& LEAN ON BRACING)

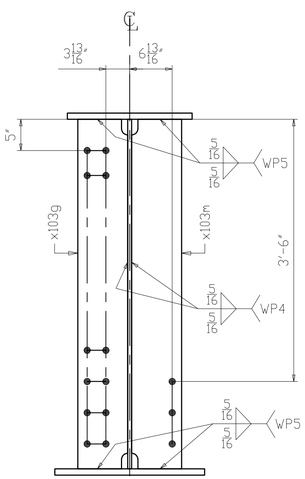

SECTION E
(INTERMEDIATE K-FRAME
& UTILITY SUPPORT)

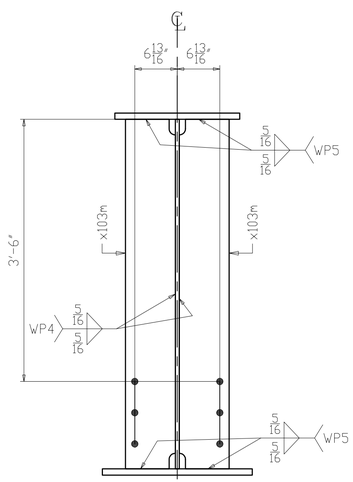

SECTION F
(UTILITY SUPPORT)

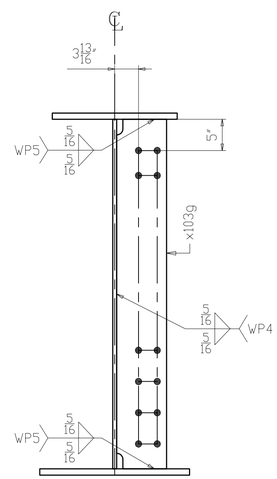

SECTION G
(INTERMEDIATE K-FRAME)

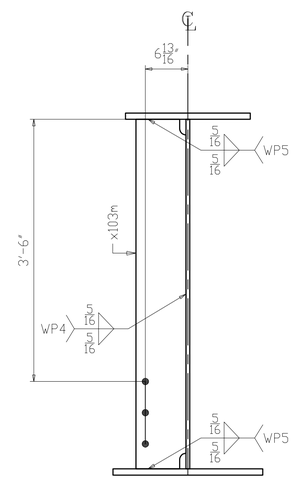

SECTION H
(UTILITY SUPPORT)

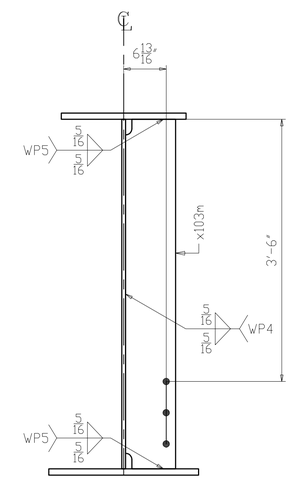

SECTION J
(UTILITY SUPPORT)

NO.	DATE	REMARKS	BY

REVISIONS

Veritas STEEL
2-EAU CLAIRE, WI 3-WAUSAU, WI 4-PALATKA, FL
TENCA 1605

STRUCTURE: CUY-010-1978R, OH-10 EASTBOUND OVER GCRTA BLUE AND GREEN LINES
LOCATION: CLEVELAND, OHIO CUYAHOGA COUNTY
PROJECT NO.: 17-3000
ENGINEER: MICHAEL BAKER INTERNATIONAL
CONTRACTOR: KOKOSING

ITEM: GIRDER 128D5
SURFACE PREP.: SEE P101 OPEN HOLES: 1 1/16"ø (U.N.O.)
PAINT: SEE P101

APPROVAL	DRAWN AM 06/05/19	SHEET NO.	PLANT	ORDER NO.
SHOP	CHECKED DP 06/20/19	128B	3	317023A-20

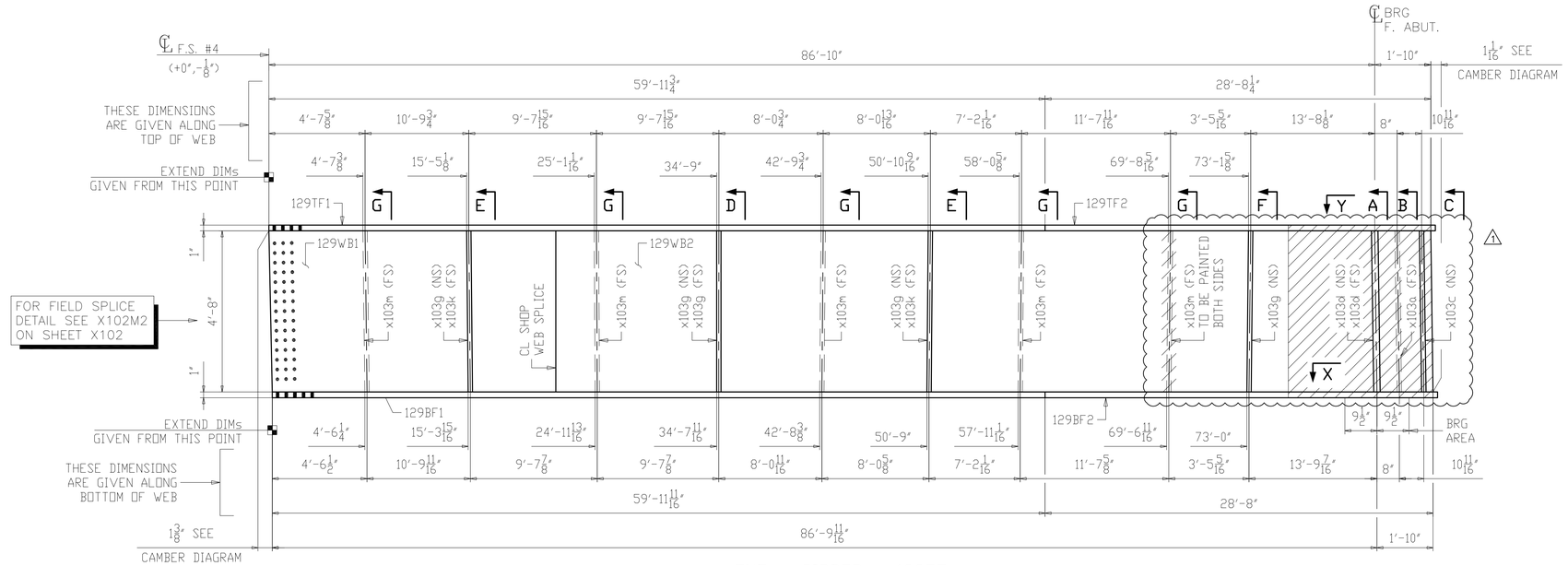

ONE ~ GIRDER ~ 129E5

(PARTIALLY PAINTED)

1. FOR GENERAL NOTES SEE SHEET GN101.
2. FOR PAINT NOTES SEE SHEET P101.
3. FOR CAMBER AND FLANGE DIAGRAM SEE SHEET BG129.
4. FOR HORIZONTAL CURVING DIAGRAMS SEE SHEET HC105.
5. FOR GIRDER STANDARD DETAILS SEE SHEET X103.
6. FOR FIELD SPLICE DETAILS SEE X102.
7. T2 - DENOTES MATERIAL SUBJECT TO CHARPY V-NOTCH TESTING (ZONE 2).
8. ALL MATERIAL A709-50WT2 (UN).
9. BRG AREA - DENOTES AREA TO BE FLAT AND TRUE TO RECEIVE SOLE PLATE.
10. ▨ - DENOTES PAINTED ZONE. 1

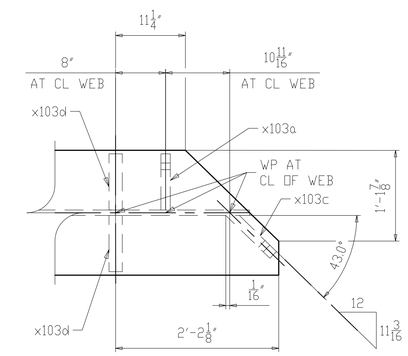

SECTION Y

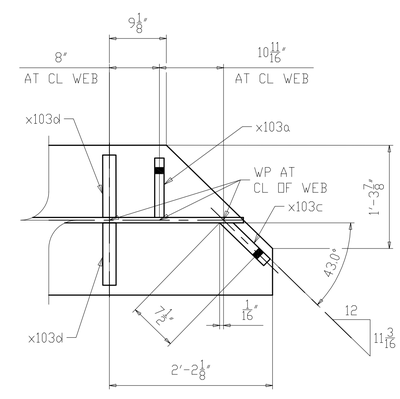

SECTION X

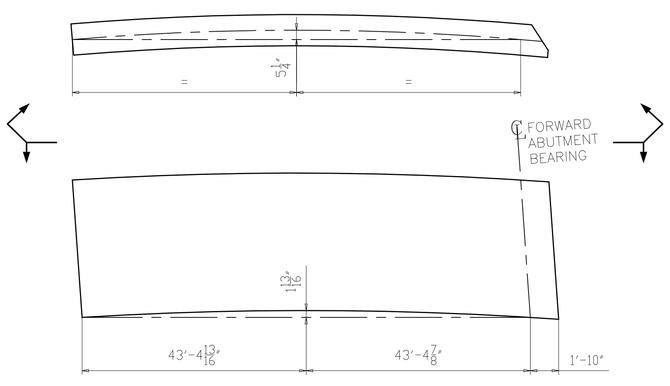

CAMBER & CURVE DIAGRAM

NO.	DATE	REMARKS	BY
1	11/01/19	AS PER APPROVAL COMMENTS	DP

REVISIONS

Veritas STEEL
2-EAU CLAIRE, WI 3-WAUSAU, WI 4-PALATKA, FL
IENCA 1605

STRUCTURE	CUY-010-1978R, OH-10 EASTBOUND OVER GCRTA BLUE AND GREEN LINES
LOCATION	CLEVELAND, OHIO CUYAHOGA COUNTY
PROJECT NO.	17-3000
ENGINEER	MICHAEL BAKER INTERNATIONAL
CONTRACTOR	KOKOSING
ITEM	GIRDER 129E5
SURFACE PREP.	SEE P101
OPEN HOLES	1 1/16"Ø (U.N.O.)
PAINT	SEE P101

APPROVAL	DRAWN AM 06/05/19	SHEET NO.	PLANT	ORDER NO.
SHOP	CHECKED DP 06/20/19	129AB	3	317023A-20

LINE	SHIP MARK	NO. OF PCS.	ASS'Y MARK	MATERIAL					
				SHAPE	LENGTH FT.	LENGTH IN.	MATERIAL SPEC.	ITEM NO.	REMARKS
1	129E5	ONE		GIRDER					PART. PAINTED 25100
2		1	129TF1	PL 1 x 20	59	11 3/4	A709-50WT2	1077	CVN 4079
3		1	129TF2	PL 1 x 20	29	0 3/8	A709-50WT2	1192	CVN 1974
4		1	129WB1	PL 5/8 x 56	22	9 1/16	A709-50WT2	1198	CVN 2708
5		1	129WB2	PL 5/8 x 56	66	0	A709-50WT2	1083	CVN 7854
6		1	129BF1	PL 1 x 24	59	11 11/16	A709-50WT2	1089	CVN 4894
7		1	129BF2	PL 1 x 24	29	0 1/8	A709-50WT2	1204	CVN 2367
8		1	x103a	PL 1/2 x 9	4	8	A709-50WT2	1095	CVN 71
9		1	x103c	PL 1/2 x 9	4	8	A709-50WT2	1095	CVN 71
10		2	x103d	PL 1 1/8 x 9	4	8	A709-50WT2	1091	CVN MIE 321
11		5	x103g	PL 1/2 x 8	4	8	A709-50WT2	1092	CVN 317
12		2	x103k	PL 1/2 x 8	4	8	A709-50WT2	1094	CVN 127
13		5	x103m	PL 1/2 x 8	4	8	A709-50WT2	1093	CVN 317

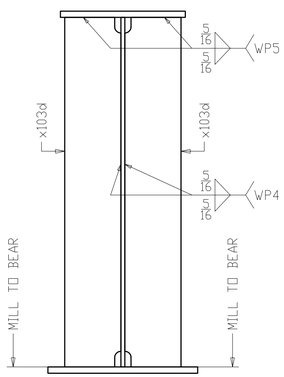

SECTION A
(BEARING FORWARD ABUTMENT)

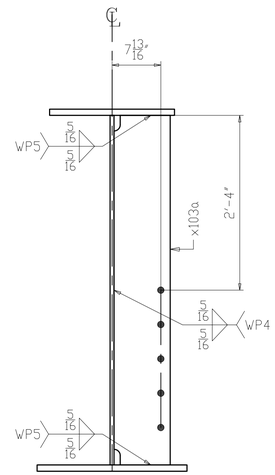

SECTION B
(FORWARD ABUTMENT K-FRAME)

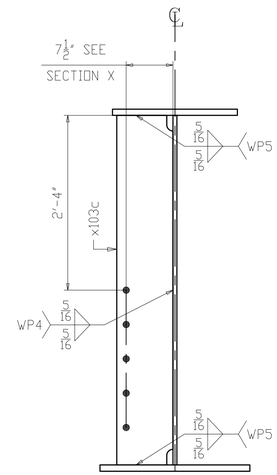

SECTION C
(FORWARD ABUTMENT K-FRAME)

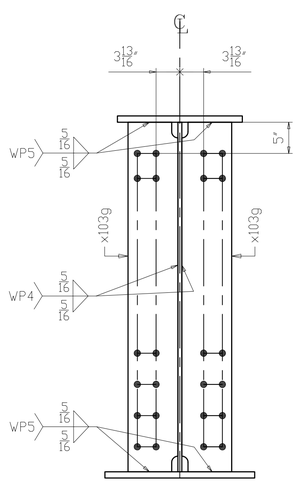

SECTION D
(INTERMEDIATE K-FRAME)

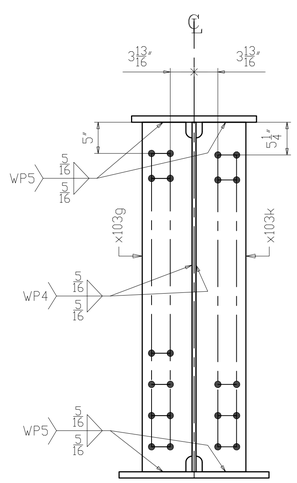

SECTION E
(INTERMEDIATE K-FRAME
& LEAN ON BRACING)

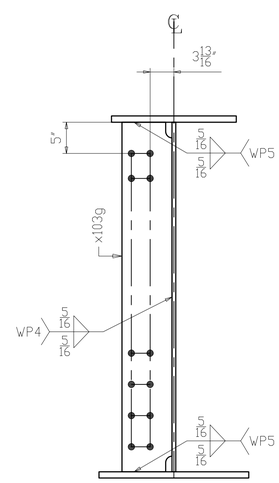

SECTION F
(INTERMEDIATE K-FRAME)

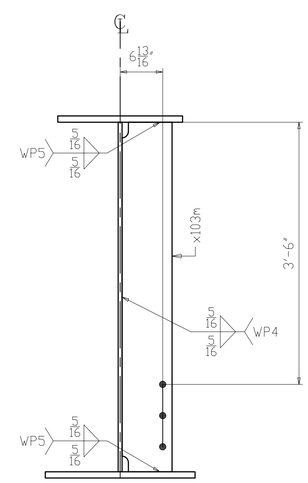

SECTION G
(UTILITY SUPPORT)

NO.	DATE	REMARKS	BY

REVISIONS

Veritas STEEL
2-EAU CLAIRE, WI 3-WAUSAU, WI 4-PALATKA, FL
IAS NCA 1605

STRUCTURE: CUY-010-1978R, OH-10 EASTBOUND OVER GCRTA BLUE AND GREEN LINES
LOCATION: CLEVELAND, OHIO CUYAHOGA COUNTY
PROJECT NO. 17-3000
ENGINEER: MICHAEL BAKER INTERNATIONAL
CONTRACTOR: KOKOSING

ITEM: GIRDER 129E5
SURFACE PREP.: SEE P101 OPEN HOLES: $1\frac{1}{16}$"Ø (U.N.O.)
PAINT: SEE P101

APPROVAL	DRAWN AM 06/05/19	SHEET NO.	PLANT	ORDER NO.
SHOP	CHECKED DP 06/20/19	129B	3	317023A-20

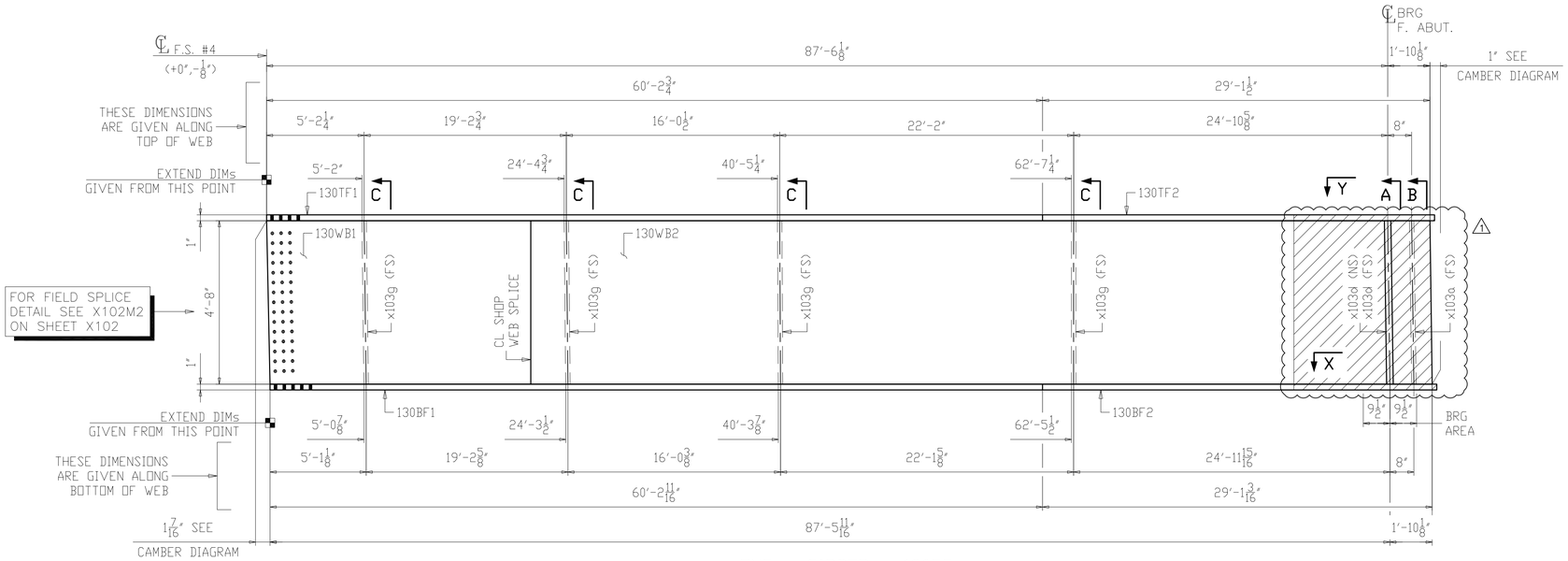

ONE ~ GIRDER ~ 130F5

(PARTIALLY PAINTED)

1. FOR GENERAL NOTES SEE SHEET GN101.
2. FOR PAINT NOTES SEE SHEET P101.
3. FOR CAMBER AND FLANGE DIAGRAM SEE SHEET BG130.
4. FOR HORIZONTAL CURVING DIAGRAMS SEE SHEET HC105.
5. FOR GIRDER STANDARD DETAILS SEE SHEET X103.
6. FOR FIELD SPLICE DETAILS SEE X102.
7. T2 - DENOTES MATERIAL SUBJECT TO CHARPY V-NOTCH TESTING (ZONE 2).
8. ALL MATERIAL A709-50WT2 (UN).
9. BRG AREA - DENOTES AREA TO BE FLAT AND TRUE TO RECEIVE SOLE PLATE.
10. ▨ - DENOTES PAINTED ZONE. (1)

LINE	SHIP MARK	NO. OF PCS.	ASS'Y MARK	MATERIAL SHAPE	LENGTH FT.	LENGTH IN.	MATERIAL SPEC.	ITEM NO.	REMARKS
1	130F5	ONE		GIRDER					PART. PAINTED 24704
2		1	130TF1	PL 1 x 20	60	2 3/4	A709-50WT2	1078	CVN 4096
3		1	130TF2	PL 1 x 20	29	5 1/2	A709-50WT2	1193	CVN 2003
4		1	130WB1	PL 5/8 x 56	23	3 1/4	A709-50WT2	1199	CVN 2769
5		1	130WB2	PL 5/8 x 56	66	2	A709-50WT2	1084	CVN 7874
6		1	130BF1	PL 1 x 24	60	2 11/16	A709-50WT2	1090	CVN 4914
7		1	130BF2	PL 1 x 24	29	5 3/16	A709-50WT2	1205	CVN 2402
8		1	x103a	PL 1/2 x 9	4	8	A709-50WT2	1095	CVN 71
9		2	x103d	PL 1 1/8 x 9	4	8	A709-50WT2	1091	CVN MIE 321
10		4	x103g	PL 1/2 x 8	4	8	A709-50WT2	1092	CVN 254

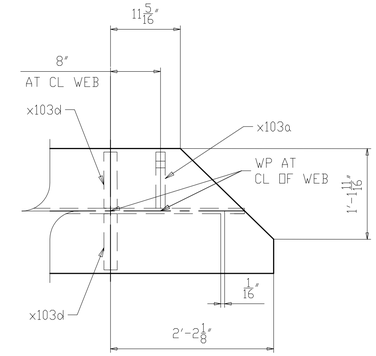

SECTION Y

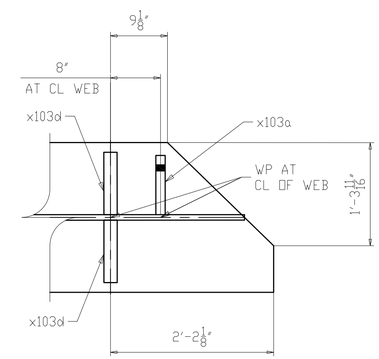

SECTION X

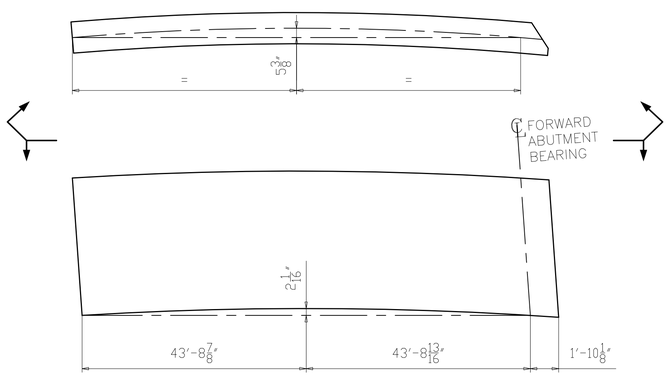

CAMBER & CURVE DIAGRAM

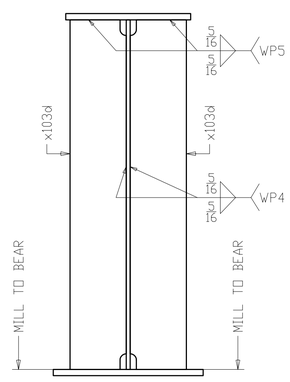

SECTION A
(BEARING FORWARD ABUTMENT)

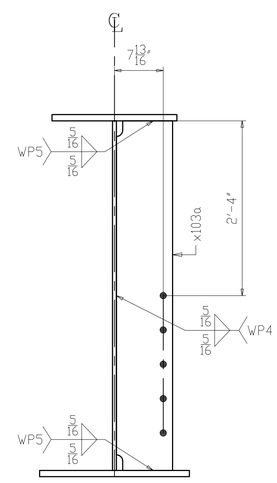

SECTION B
(FORWARD ABUTMENT K-FRAME)

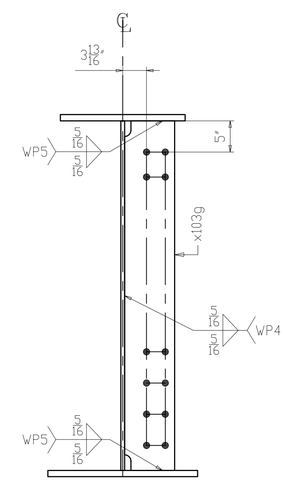

SECTION C
(INTERMEDIATE K-FRAME)

NO.	DATE	REMARKS	BY
1	11/01/19	AS PER APPROVAL COMMENTS	DP

REVISIONS

Veritas STEEL
2-EAU CLAIRE, WI 3-WAUSAU, WI 4-PALATKA, FL
IAENCA 1605

STRUCTURE	CUY-010-1978R, OH-10 EASTBOUND OVER GCRTA BLUE AND GREEN LINES
LOCATION	CLEVELAND, OHIO CUYAHOGA COUNTY
PROJECT NO.	17-3000
ENGINEER	MICHAEL BAKER INTERNATIONAL
CONTRACTOR	KOKOSING
ITEM	GIRDER 130F5
SURFACE PREP.	SEE P101 OPEN HOLES 1 1/16"Ø (U.N.O.)
PAINT	SEE P101

APPROVAL	DRAWN AM 06/05/19	SHEET NO.	PLANT	ORDER NO.
SHOP	CHECKED DP 06/20/19	130	3	317023A-20

LINE	SHIP MARK	NO. OF PCS.	ASS'Y MARK	MATERIAL SHAPE	LENGTH FT.	LENGTH IN.	MATERIAL SPEC.	ITEM NO.	REMARKS	
1	131CF1	ONE		ABUTMENT K-FRAME					PAINTED	886
2		1	x104a	PL 1/2 x 25	2	2 1/2	A709-50WT2	1133	CVN	94
3		1	x104b	PL 1/2 x 25	2	2 1/2	A709-50WT2	1132	CVN BENT	94
4		1	x104k	MC12 x 50	10	5 3/4	A709-50WT2	1124	CVN	524
5		1	x104w	L5 x 5 x 1/2	5	4 1/8	A709-50WT2	1128	CVN	87
6		1	x104y	L5 x 5 x 1/2	5	4 9/16	A709-50WT2	1128	CVN	87

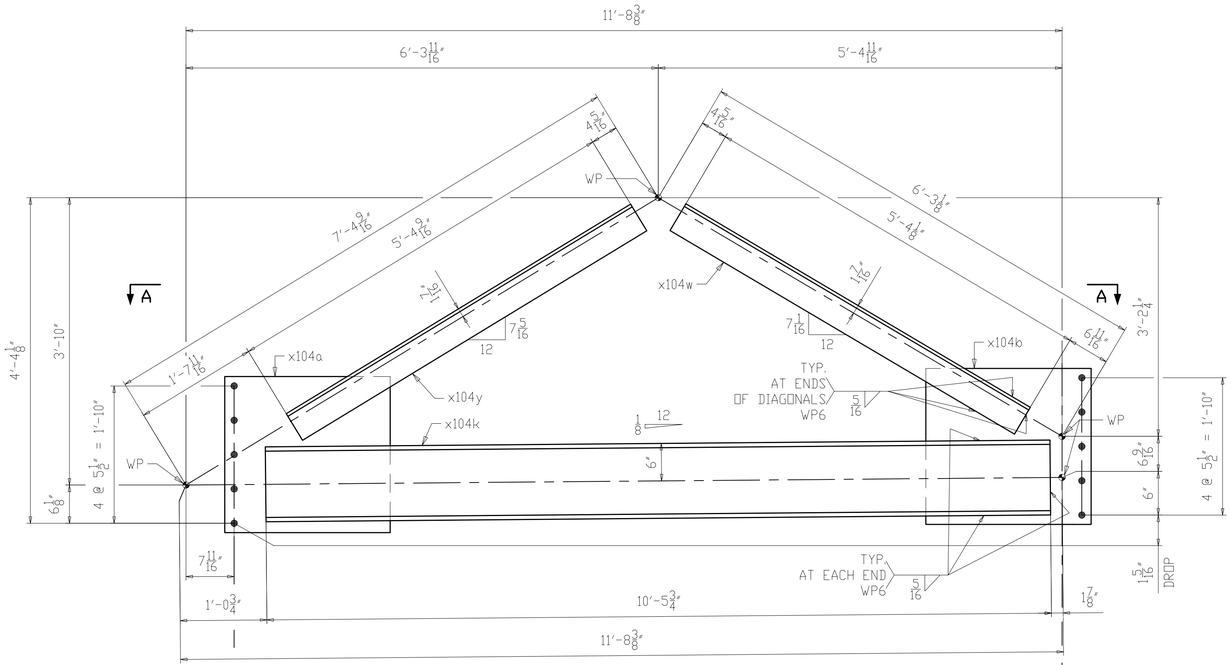

ONE ~ ABUTMENT K-FRAME ~ 131CF1

(REAR ABUTMENT)

(PAINTED)

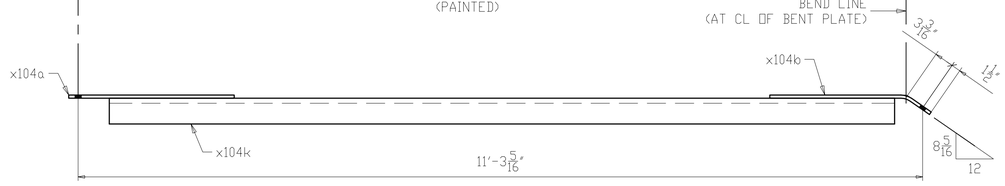

SECTION A-A

NOTES:
1. FOR GENERAL NOTES SEE SHEET GN101.
2. FOR PAINT NOTES SEE SHEET P101.
3. ALL MATERIAL A709-50WT2 (UN).
4. T2 - DENOTES MATERIAL SUBJECT TO CHARPY V-NOTCH TESTING.
5. FOR K-FRAME STANDARD DETAILS SEE X104.

NO.	DATE	REMARKS	BY

REVISIONS

Veritas STEEL

2-EAU CLAIRE, WI 3-WAUSAU, WI 4-PALATKA, FL

TENCA 1605

STRUCTURE: CUY-010-1978R, OH-10 EASTBOUND OVER GCRTA BLUE AND GREEN LINES

LOCATION: CLEVELAND, OHIO CUYAHOGA COUNTY

PROJECT NO. 17-3000

ENGINEER MICHAEL BAKER INTERNATIONAL

CONTRACTOR KOKOSING

ITEM REAR ABUTMENT K-FRAME

SURFACE PREP. SEE P101 OPEN HOLES 1 1/16"Ø (U.N.O.)

PAINT SEE P101

APPROVAL	DRAWN AM 05/22/19	SHEET NO.	PLANT	ORDER NO.
SHOP	CHECKED DP 06/21/19	131	3	317023A-37

LINE	SHIP MARK	NO. OF PCS.	ASS'Y MARK	MATERIAL SHAPE	LENGTH FT.	LENGTH IN.	MATERIAL SPEC.	ITEM NO.	REMARKS
1	132CF1	ONE		ABUTMENT K-FRAME					PAINTED 887
2		1	x104a	PL 1/2 x 25	2	2 1/2	A709-50WT2	1133	CVN 94
3		1	x104c	PL 1/2 x 25	2	2 1/2	A709-50WT2	1132	CVN BENT 94
4		1	x104m	MC12 x 50	10	6 1/16	A709-50WT2	1124	CVN 525
5		1	x104aa	L5 x 5 x 1/2	5	4 11/16	A709-50WT2	1128	CVN 87
6		1	x104ay	L5 x 5 x 1/2	5	4 3/16	A709-50WT2	1128	CVN 87

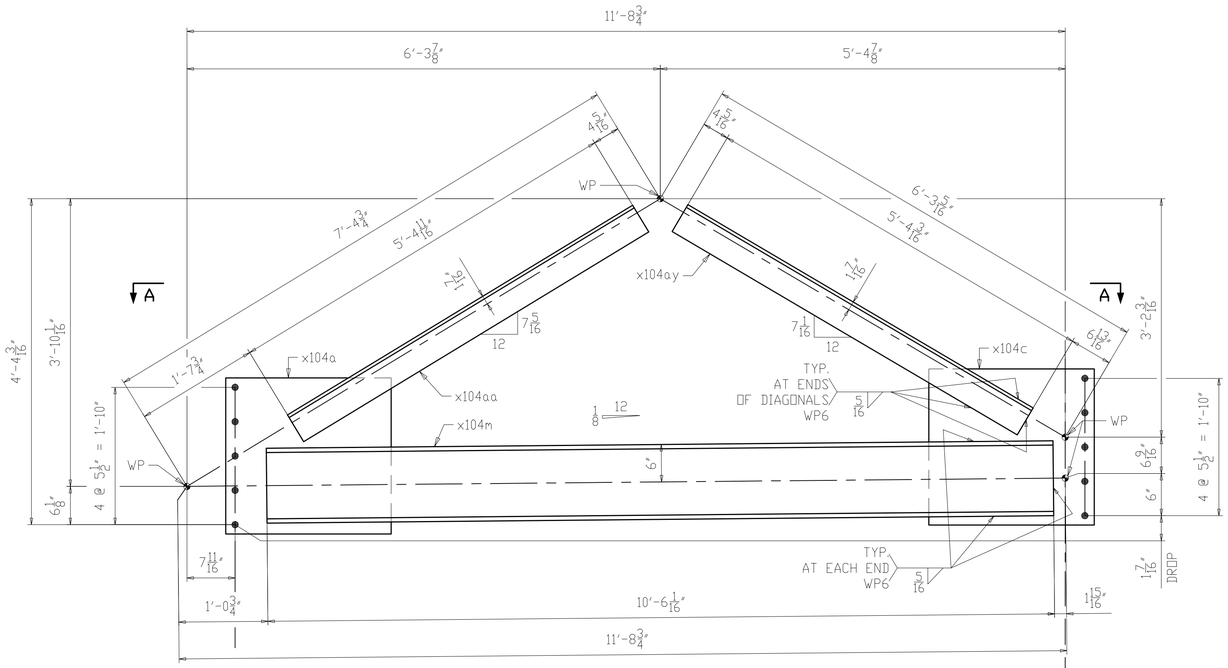

ONE ~ ABUTMENT K-FRAME ~ 132CF1

(REAR ABUTMENT)
(PAINTED)

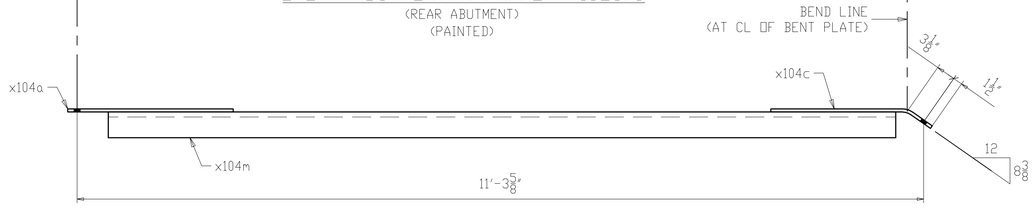

SECTION A-A

NOTES:
1. FOR GENERAL NOTES SEE SHEET GN101.
2. FOR PAINT NOTES SEE SHEET P101.
3. ALL MATERIAL A709-50WT2 (UN).
4. T2 - DENOTES MATERIAL SUBJECT TO CHARPY V-NOTCH TESTING.
5. FOR K-FRAME STANDARD DETAILS SEE X104.

NO.	DATE	REMARKS	BY

REVISIONS

Veritas STEEL
2-EAU CLAIRE, WI 3-WAUSAU, WI 4-PALATKA, FL
IENCA 1605

STRUCTURE: CUY-010-1978R, OH-10 EASTBOUND OVER GCRTA BLUE AND GREEN LINES
LOCATION: CLEVELAND, OHIO CUYAHOGA COUNTY
PROJECT NO. 17-3000
ENGINEER: MICHAEL BAKER INTERNATIONAL
CONTRACTOR: KOKOSING

ITEM: REAR ABUTMENT K-FRAME
SURFACE PREP. SEE P101 OPEN HOLES 1 1/16"Ø (U.N.O.)
PAINT: SEE P101

APPROVAL	DRAWN AM 05/22/19	SHEET NO.	PLANT	ORDER NO.
SHOP	CHECKED DP 06/21/19	132	3	317023A-37

LINE	SHIP MARK	NO. OF PCS.	ASS'Y MARK	MATERIAL SHAPE	LENGTH FT.	LENGTH IN.	MATERIAL SPEC.	ITEM NO.	REMARKS	
1	133CF1	ONE		ABUTMENT K-FRAME					PAINTED	783
2		1	x104a	PL 1/2 x 25	2	2 1/2	A709-50WT2	1133	CVN	94
3		1	x104d	PL 1/2 x 25	2	2 1/2	A709-50WT2	1132	CVN BENT	94
4		1	x104ab	L5 x 5 x 1/2	5	8 1/8	A709-50WT2	1129	CVN	92
5		1	x104ac	L5 x 5 x 1/2	5	8 7/8	A709-50WT2	1129	CVN	93
6		1	x105a	L8 x 8 x 3/4	10	6 7/16	A709-50WT2	1126	CVN	410

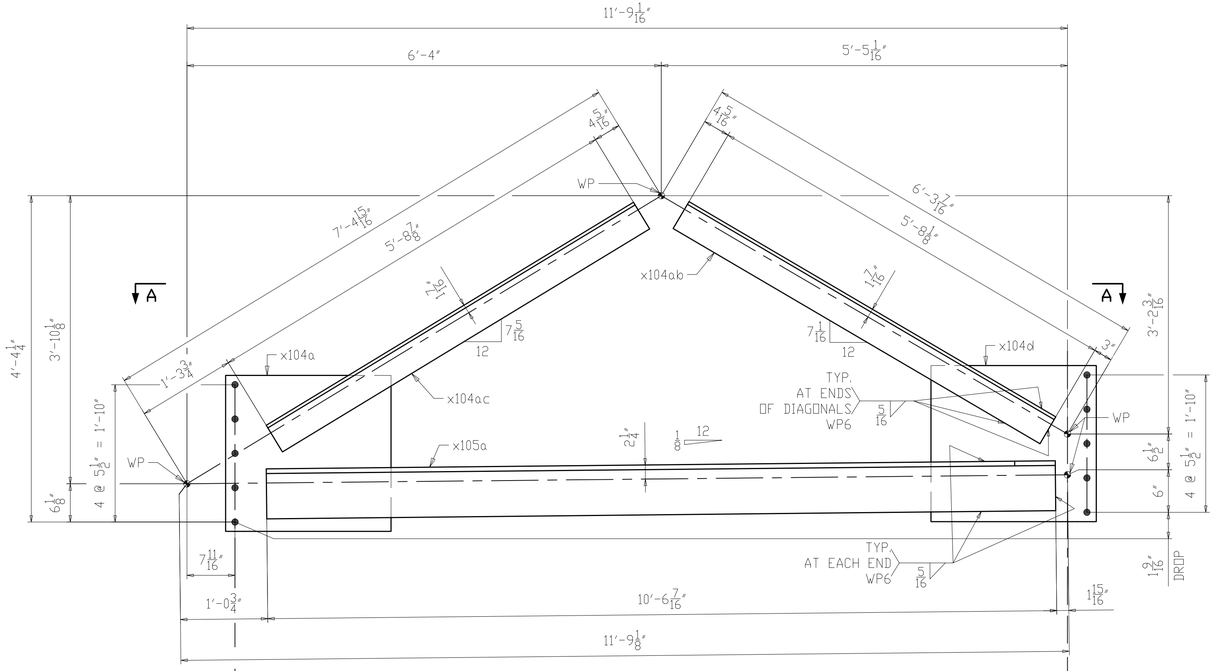

ONE ~ ABUTMENT K-FRAME ~ 133CF1

(REAR ABUTMENT)

(PAINTED)

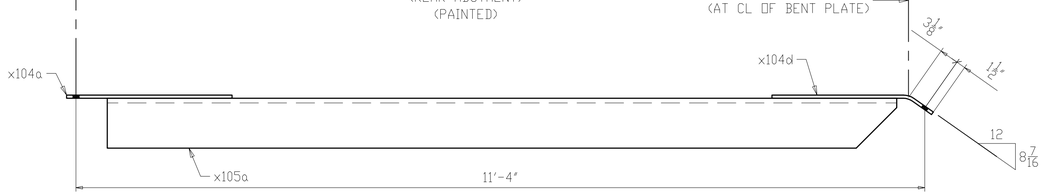

SECTION A-A

NOTES:
1. FOR GENERAL NOTES SEE SHEET GN101.
2. FOR PAINT NOTES SEE SHEET P101.
3. ALL MATERIAL A709-50WT2 (UN).
4. T2 - DENOTES MATERIAL SUBJECT TO CHARPY V-NOTCH TESTING.
5. FOR K-FRAME STANDARD DETAILS SEE X104 & X105.

NO.	DATE	REMARKS	BY

REVISIONS

Veritas STEEL
2-EAU CLAIRE, WI 3-WAUSAU, WI 4-PALATKA, FL
IENCA 1605

STRUCTURE: CUY-010-1978R, OH-10 EASTBOUND OVER GCRTA BLUE AND GREEN LINES
LOCATION: CLEVELAND, OHIO CUYAHOGA COUNTY
PROJECT NO. 17-3000
ENGINEER: MICHAEL BAKER INTERNATIONAL
CONTRACTOR: KOKOSING

ITEM: REAR ABUTMENT K-FRAME
SURFACE PREP. SEE P101 OPEN HOLES $1\frac{1}{16}$"Ø (U.N.O.)
PAINT: SEE P101

APPROVAL	DRAWN AM 05/22/19	SHEET NO.	PLANT	ORDER NO.
SHOP	CHECKED DP 06/21/19	133	3	317023A-37

LINE	SHIP MARK	NO. OF PCS.	ASS'Y MARK	MATERIAL SHAPE	LENGTH FT.	LENGTH IN.	MATERIAL SPEC.	ITEM NO.	REMARKS	
1	134CF1	ONE		ABUTMENT K-FRAME					PAINTED	784
2		1	x104a	PL 1/2 x 25	2	2 1/2	A709-50WT2	1133	CVN	94
3		1	x104f	PL 1/2 x 25	2	2 1/2	A709-50WT2	1132	CVN BENT	94
4		1	x104ad	L5 x 5 x 1/2	5	8 1/2	A709-50WT2	1129	CVN	92
5		1	x104bb	L5 x 5 x 1/2	5	8 3/4	A709-50WT2	1129	CVN	93
6		1	x105b	L8 x 8 x 3/4	10	6 13/16	A709-50WT2	1126	CVN	411

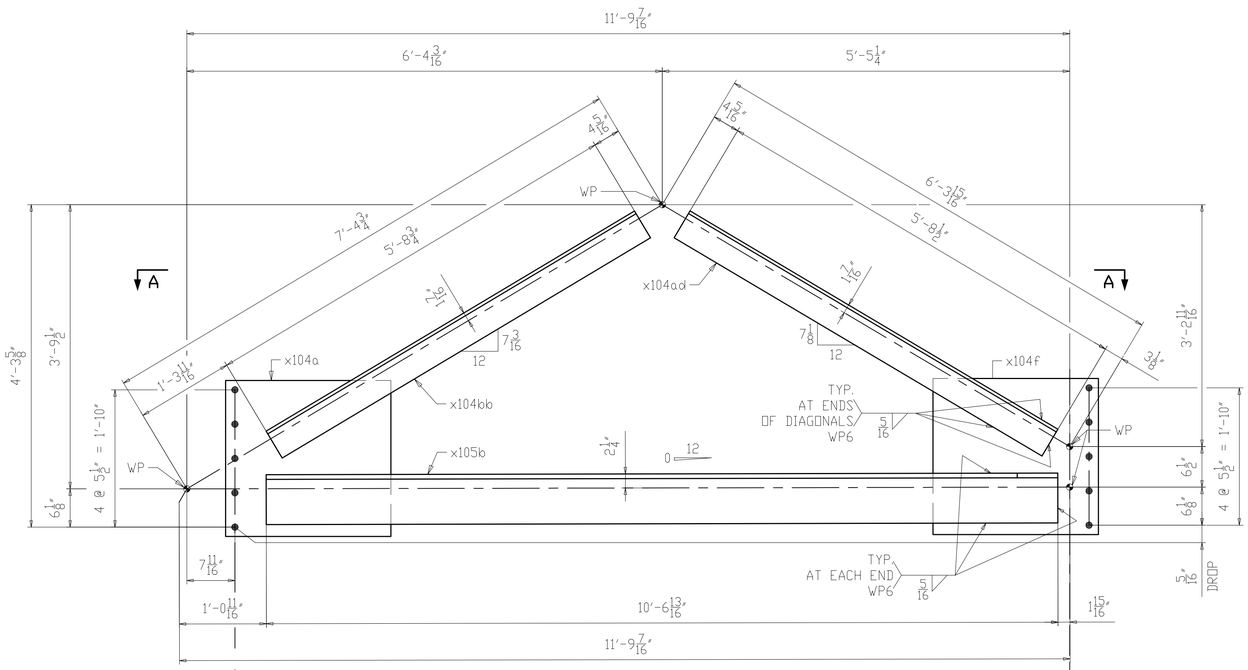

ONE ~ ABUTMENT K-FRAME ~ 134CF1
(REAR ABUTMENT)
(PAINTED)

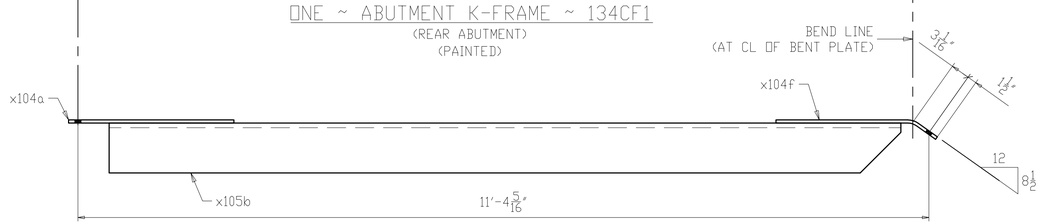

SECTION A-A

NOTES:
1. FOR GENERAL NOTES SEE SHEET GN101.
2. FOR PAINT NOTES SEE SHEET P101.
3. ALL MATERIAL A709-50WT2 (UN).
4. T2 - DENOTES MATERIAL SUBJECT TO CHARPY V-NOTCH TESTING.
5. FOR K-FRAME STANDARD DETAILS SEE X104 & X105.

NO.	DATE	REMARKS	BY

REVISIONS

Veritas STEEL
2-EAU CLAIRE, WI 3-WAUSAU, WI 4-PALATKA, FL
TENCA 1605

STRUCTURE: CUY-010-1978R, OH-10 EASTBOUND OVER GCRTA BLUE AND GREEN LINES
LOCATION: CLEVELAND, OHIO CUYAHOGA COUNTY
PROJECT NO. 17-3000
ENGINEER MICHAEL BAKER INTERNATIONAL
CONTRACTOR KOKOSING

ITEM REAR ABUTMENT K-FRAME
SURFACE PREP. SEE P101 OPEN HOLES 1 1/16"Ø (U.N.O.)
PAINT SEE P101

APPROVAL	DRAWN AM 05/22/19	SHEET NO.	PLANT	ORDER NO.
SHOP	CHECKED DP 06/21/19	134	3	317023A-37

LINE	SHIP MARK	NO. OF PCS.	ASS'Y MARK	MATERIAL SHAPE	LENGTH FT.	LENGTH IN.	MATERIAL SPEC.	ITEM NO.	REMARKS	
1	135CF1	ONE		ABUTMENT K-FRAME					PAINTED	892
2		1	x104a	PL 1/2 x 25	2	2 1/2	A709-50WT2	1133	CVN	94
3		1	x104g	PL 1/2 x 25	2	2 1/2	A709-50WT2	1132	CVN BENT	94
4		1	x104n	MC12 x 50	10	7 3/16	A709-50WT2	1124	CVN	530
5		1	x104aa	L5 x 5 x 1/2	5	4 11/16	A709-50WT2	1128	CVN	87
6		1	x104ba	L5 x 5 x 1/2	5	4 13/16	A709-50WT2	1128	CVN	87

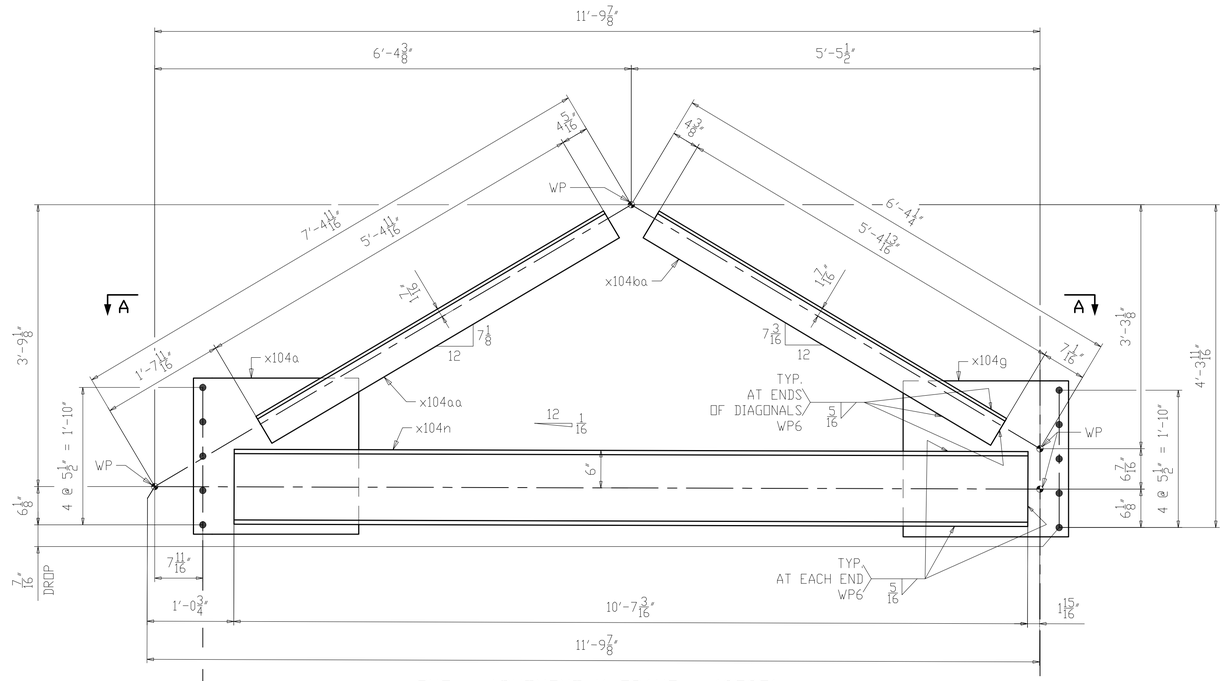

ONE ~ ABUTMENT K-FRAME ~ 135CF1
(REAR ABUTMENT)
(PAINTED)

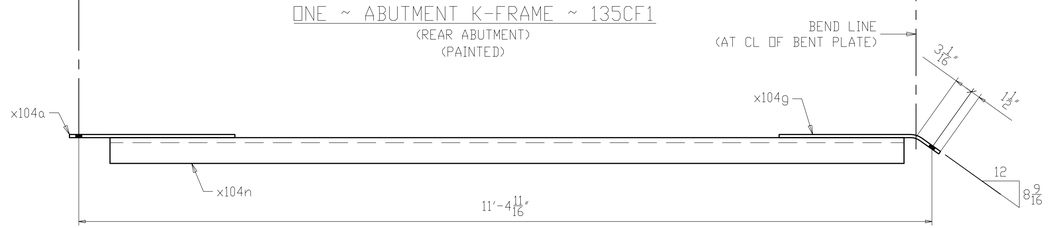

SECTION A-A

NOTES:
1. FOR GENERAL NOTES SEE SHEET GN101.
2. FOR PAINT NOTES SEE SHEET P101.
3. ALL MATERIAL A709-50WT2 (UN).
4. T2 - DENOTES MATERIAL SUBJECT TO CHARPY V-NOTCH TESTING.
5. FOR K-FRAME STANDARD DETAILS SEE X104.

NO.	DATE	REMARKS	BY

REVISIONS

Veritas STEEL
2-EAU CLAIRE, WI 3-WAUSAU, WI 4-PALATKA, FL
TENCA 1605

STRUCTURE	CUY-010-1978R, OH-10 EASTBOUND OVER GCRTA BLUE AND GREEN LINES
LOCATION	CLEVELAND, OHIO CUYAHOGA COUNTY
PROJECT NO.	17-3000
ENGINEER	MICHAEL BAKER INTERNATIONAL
CONTRACTOR	KOKOSING
ITEM	REAR ABUTMENT K-FRAME
SURFACE PREP.	SEE P101
OPEN HOLES	1 1/16"Ø (U.N.O.)
PAINT	SEE P101

APPROVAL	DRAWN AM 05/22/19	SHEET NO.	PLANT	ORDER NO.
SHOP	CHECKED DP 06/21/19	135	3	317023A-37

LINE	SHIP MARK	NO. OF PCS.	ASS'Y MARK	MATERIAL SHAPE	LENGTH FT.	LENGTH IN.	MATERIAL SPEC.	ITEM NO.	REMARKS
1	136CF1	ONE		ABUTMENT K-FRAME					PAINTED 1014
2		1	x104a	PL 1/2 x 25	2	2 1/2	A709-50WT2	1133	CVN 94
3		1	x104p	MC12 x 50	12	7 3/8	A709-50WT2	1125	CVN 631
4		1	x104af	L5 x 5 x 1/2	5	11 7/16	A709-50WT2	1130	CVN 96
5		1	x104ag	L5 x 5 x 1/2	6	1	A709-50WT2	1130	CVN 99
6		1	x105c	PL 1/2 x 25	2	2 1/2	A709-50WT2	1132	CVN BENT 94

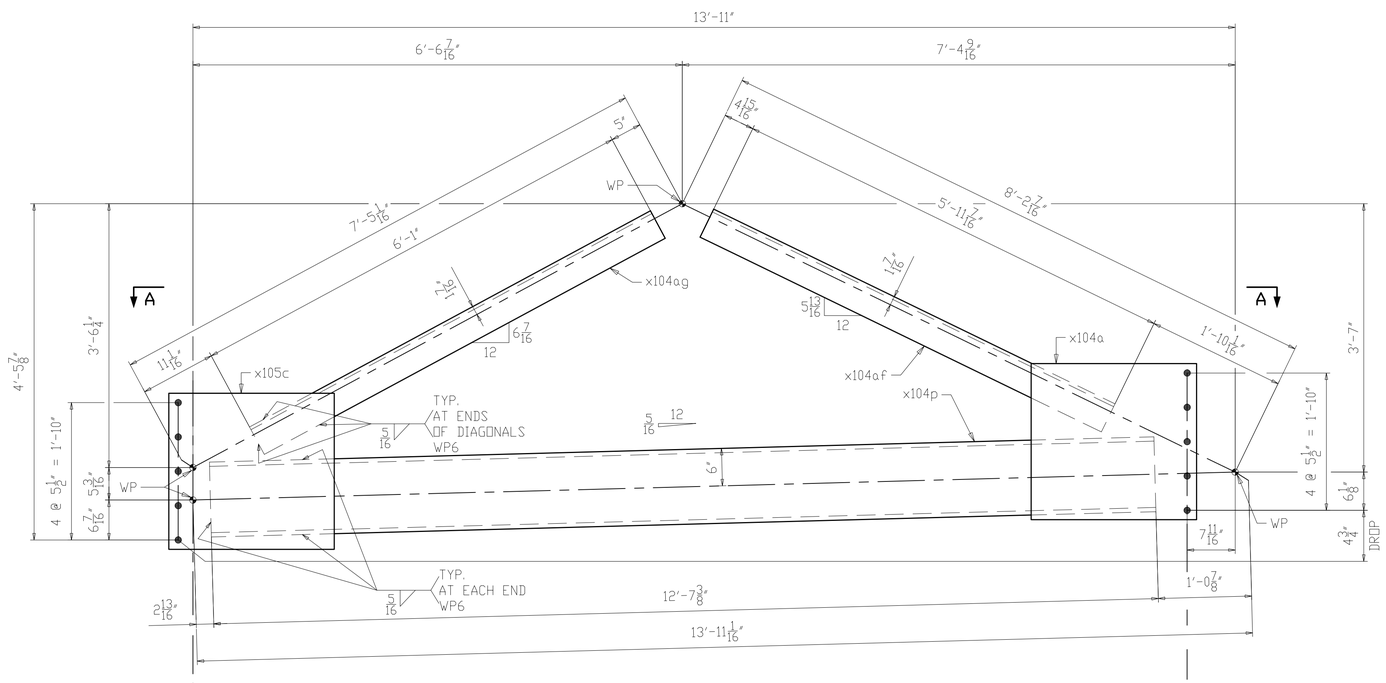

ONE ~ ABUTMENT K-FRAME ~ 136CF1
(FORWARD ABUTMENT)
(PAINTED)

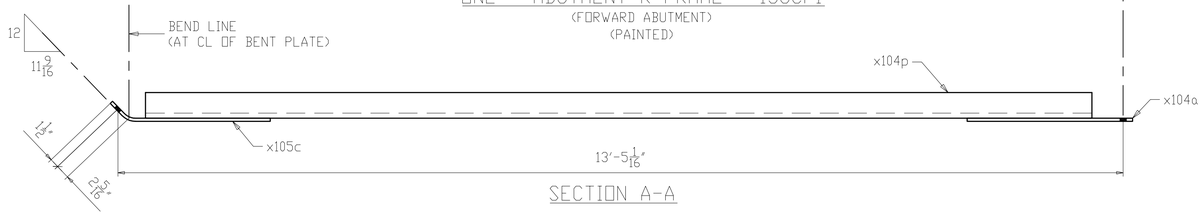

SECTION A-A

NOTES:
1. FOR GENERAL NOTES SEE SHEET GN101.
2. FOR PAINT NOTES SEE SHEET P101.
3. ALL MATERIAL A709-50WT2 (UN).
4. T2 - DENOTES MATERIAL SUBJECT TO CHARPY V-NOTCH TESTING.
5. FOR K-FRAME STANDARD DETAILS SEE X104 & X105.

NO.	DATE	REMARKS	BY

REVISIONS

Veritas STEEL
2-EAU CLAIRE, WI 3-WAUSAU, WI 4-PALATKA, FL
TENCA 1605

STRUCTURE	CUY-010-1978R, OH-10 EASTBOUND OVER GCRTA BLUE AND GREEN LINES
LOCATION	CLEVELAND, OHIO CUYAHOGA COUNTY
PROJECT NO.	17-3000
ENGINEER	MICHAEL BAKER INTERNATIONAL
CONTRACTOR	KOKOSING
ITEM	FORWARD ABUTMENT K-FRAME
SURFACE PREP.	SEE P101 OPEN HOLES 1 1/16"Ø (U.N.O.)
PAINT	SEE P101

APPROVAL	DRAWN AM 05/22/19	SHEET NO.	PLANT	ORDER NO.
SHOP	CHECKED DP 06/21/19	136	3	317023A-37

LINE	SHIP MARK	NO. OF PCS.	ASS'Y MARK	MATERIAL SHAPE	LENGTH FT.	LENGTH IN.	MATERIAL SPEC.	ITEM NO.	REMARKS
1	137CF1	ONE		ABUTMENT K-FRAME					PAINTED 1018
2		1	x104a	PL 1/2 x 25	2	2 1/2	A709-50WT2	1133	CVN 94
3		1	x104t	MC12 x 50	12	8 1/4	A709-50WT2	1125	CVN 634
4		1	x104ak	L5 x 5 x 1/2	5	11 11/16	A709-50WT2	1130	CVN 97
5		1	x104am	L5 x 5 x 1/2	6	1 1/4	A709-50WT2	1130	CVN 99
6		1	x105d	PL 1/2 x 25	2	2 1/2	A709-50WT2	1132	CVN BENT 94

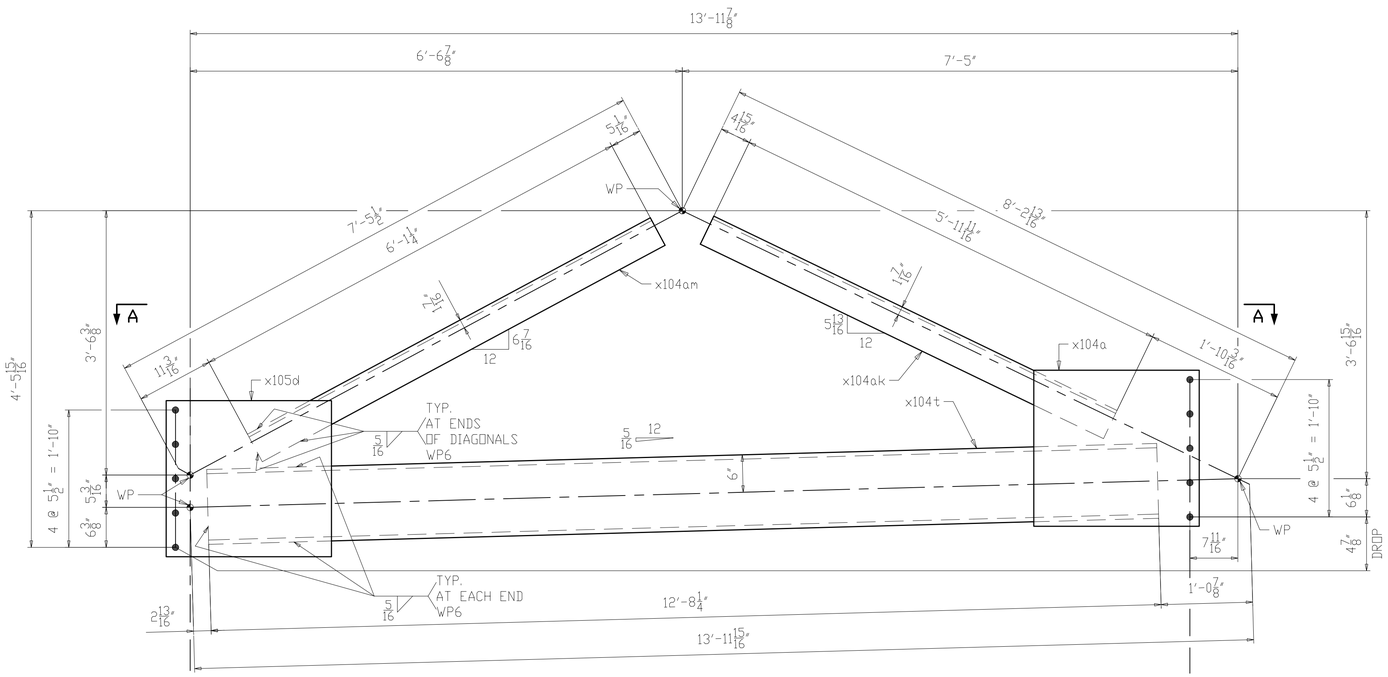

ONE ~ ABUTMENT K-FRAME ~ 137CF1
(FORWARD ABUTMENT)
(PAINTED)

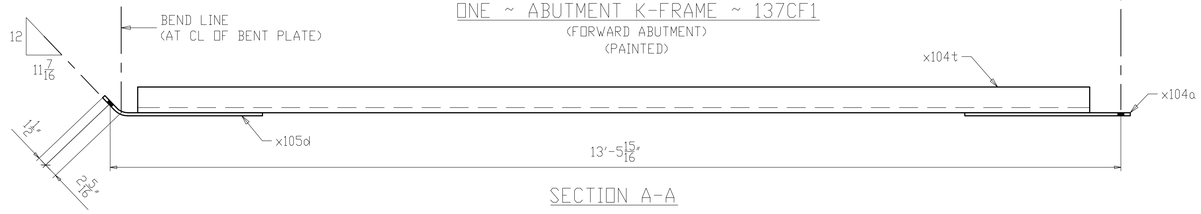

SECTION A-A

NOTES:
1. FOR GENERAL NOTES SEE SHEET GN101.
2. FOR PAINT NOTES SEE SHEET P101.
3. ALL MATERIAL A709-50WT2 (UN).
4. T2 - DENOTES MATERIAL SUBJECT TO CHARPY V-NOTCH TESTING.
5. FOR K-FRAME STANDARD DETAILS SEE X104 & X105.

NO.	DATE	REMARKS	BY

REVISIONS

Veritas STEEL
2-EAU CLAIRE, WI 3-WAUSAU, WI 4-PALATKA, FL
TENGA 1605

STRUCTURE: CUY-010-1978R, OH-10 EASTBOUND OVER GCRTA BLUE AND GREEN LINES
LOCATION: CLEVELAND, OHIO CUYAHOGA COUNTY
PROJECT NO.: 17-3000
ENGINEER: MICHAEL BAKER INTERNATIONAL
CONTRACTOR: KOKOSING

ITEM: FORWARD ABUTMENT K-FRAME
SURFACE PREP.: SEE P101 OPEN HOLES: 1 1/16"Ø (U.N.O.)
PAINT: SEE P101

APPROVAL	DRAWN AM 05/22/19	SHEET NO.	PLANT	ORDER NO.
SHOP	CHECKED DP 06/21/19	137	3	317023A-37

LINE	SHIP MARK	NO. OF PCS.	ASS'Y MARK	MATERIAL SHAPE	LENGTH FT.	LENGTH IN.	MATERIAL SPEC.	ITEM NO.	REMARKS
1	138CF1	ONE		ABUTMENT K-FRAME					PAINTED 901
2		1	x104a	PL 1/2 x 25	2	2 1/2	A709-50WT2	1133	CVN 94
3		1	x104an	L5 x 5 x 1/2	6	7 1/2	A709-50WT2	1131	CVN 107
4		1	x104ap	L5 x 5 x 1/2	6	9 1/16	A709-50WT2	1131	CVN 109
5		1	x105f	PL 1/2 x 25	2	2 1/2	A709-50WT2	1132	CVN BENT 94
6		1	x106a	L8 x 8 x 3/4	12	9 1/4	A709-50WT2	1127	CVN 497

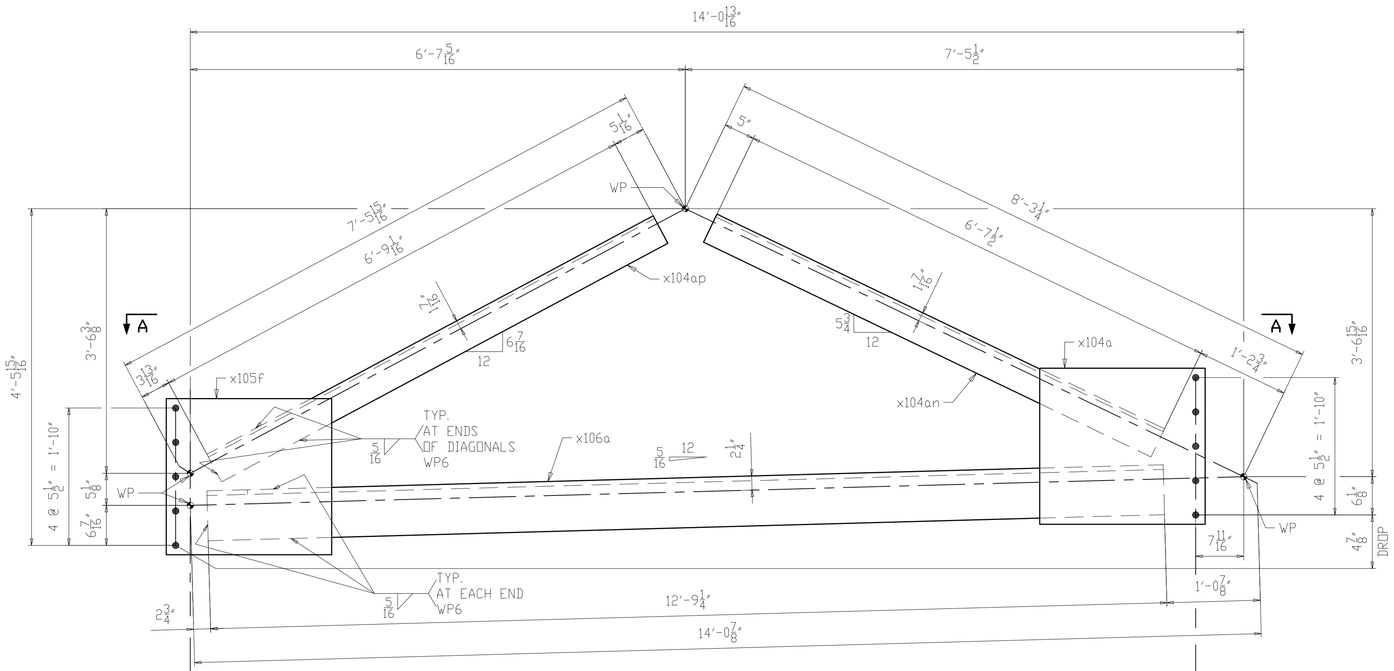

ONE ~ ABUTMENT K-FRAME ~ 138CF1

(FORWARD ABUTMENT)

(PAINTED)

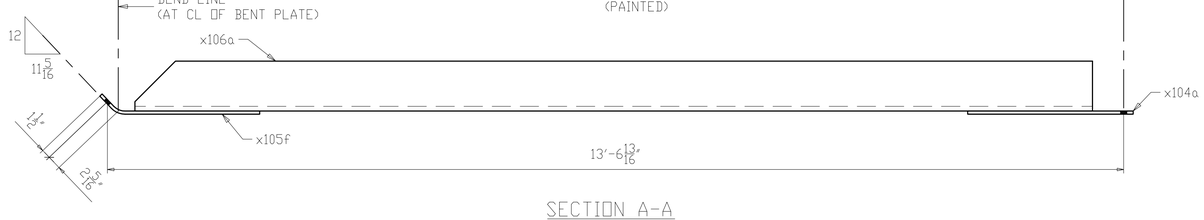

SECTION A-A

NOTES:
1. FOR GENERAL NOTES SEE SHEET GN101.
2. FOR PAINT NOTES SEE SHEET P101.
3. ALL MATERIAL A709-50WT2 (UN).
4. T2 - DENOTES MATERIAL SUBJECT TO CHARPY V-NOTCH TESTING.
5. FOR K-FRAME STANDARD DETAILS SEE X104 THRU X106.

NO.	DATE	REMARKS	BY

REVISIONS

Veritas STEEL

2-EAU CLAIRE, WI 3-WAUSAU, WI 4-PALATKA, FL

TENCA 1605

STRUCTURE: CUY-010-1978R, OH-10 EASTBOUND OVER GCRTA BLUE AND GREEN LINES

LOCATION: CLEVELAND, OHIO CUYAHOGA COUNTY

PROJECT NO.: 17-3000

ENGINEER: MICHAEL BAKER INTERNATIONAL

CONTRACTOR: KOKOSING

ITEM: FORWARD ABUTMENT K-FRAME

SURFACE PREP.: SEE P101 OPEN HOLES: 1 1/16"Ø (U.N.O.)

PAINT: SEE P101

APPROVAL	DRAWN AM 05/22/19	SHEET NO.	PLANT	ORDER NO.
SHOP	CHECKED DP 06/21/19	138	3	317023A-37

LINE	SHIP MARK	NO. OF PCS.	ASS'Y MARK	MATERIAL SHAPE	LENGTH FT.	LENGTH IN.	MATERIAL SPEC.	ITEM NO.	REMARKS
1	139CF1	ONE		ABUTMENT K-FRAME					PAINTED 906
2		1	x104a	PL 1/2 x 25	2	2 1/2	A709-50WT2	1133	CVN 94
3		1	x104at	L5 x 5 x 1/2	6	8 3/16	A709-50WT2	1131	CVN 108
4		1	x104av	L5 x 5 x 1/2	6	9 1/4	A709-50WT2	1131	CVN 110
5		1	x105g	PL 1/2 x 25	2	2 1/2	A709-50WT2	1132	CVN BENT 94
6		1	x106b	L8 x 8 3/4	12	10 1/4	A709-50WT2	1127	CVN 500

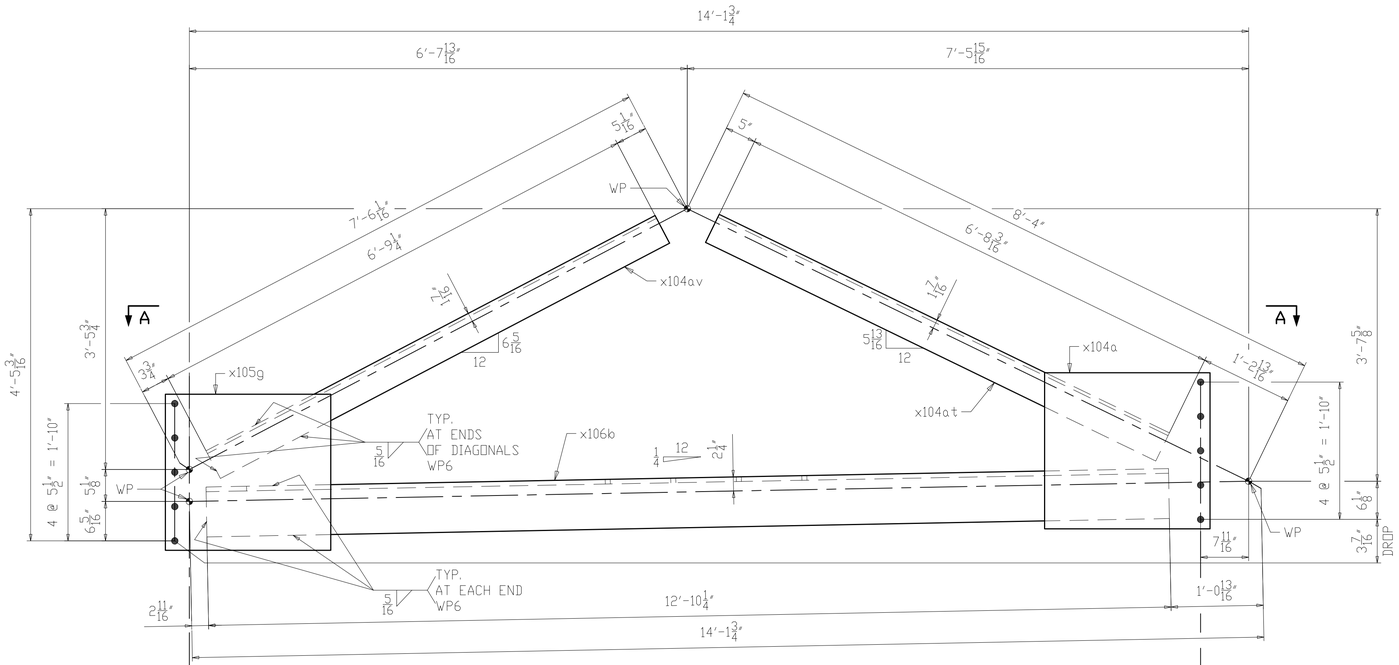

ONE ~ ABUTMENT K-FRAME ~ 139CF1

(FORWARD ABUTMENT)

(PAINTED)

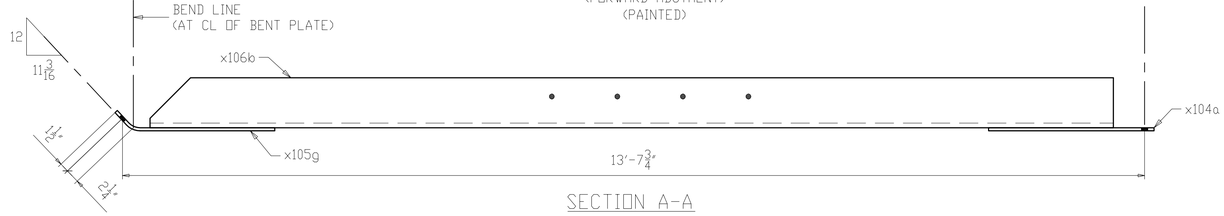

SECTION A-A

NOTES:
1. FOR GENERAL NOTES SEE SHEET GN101.
2. FOR PAINT NOTES SEE SHEET P101.
3. ALL MATERIAL A709-50WT2 (UN).
4. T2 - DENOTES MATERIAL SUBJECT TO CHARPY V-NOTCH TESTING.
5. FOR K-FRAME STANDARD DETAILS SEE X104 THRU X106.

NO.	DATE	REMARKS	BY

REVISIONS

Veritas STEEL
2-EAU CLAIRE, WI 3-WAUSAU, WI 4-PALATKA, FL
IAS NCA 1605

STRUCTURE	CUY-010-1978R, OH-10 EASTBOUND OVER GCRTA BLUE AND GREEN LINES
LOCATION	CLEVELAND, OHIO CUYAHOGA COUNTY
PROJECT NO.	17-3000
ENGINEER	MICHAEL BAKER INTERNATIONAL
CONTRACTOR	KOKOSING
ITEM	FORWARD ABUTMENT K-FRAME
SURFACE PREP.	SEE P101 OPEN HOLES 1 1/16"Ø (U.N.O.)
PAINT	SEE P101

APPROVAL	DRAWN AM 05/22/19	SHEET NO.	PLANT	ORDER NO.
SHOP	CHECKED DP 06/21/19	139	3	317023A-37

LINE	SHIP MARK	NO. OF PCS.	ASS'Y MARK	MATERIAL SHAPE	LENGTH FT.	LENGTH IN.	MATERIAL SPEC.	ITEM NO.	REMARKS
1	140CF1	ONE		ABUTMENT K-FRAME					PAINTED 1033
2		1	x104a	PL 1/2 x 25	2	2 1/2	A709-50WT2	1133	CVN 94
3		1	x104v	MC12 x 50	12	11 3/16	A709-50WT2	1125	CVN 647
4		1	x104ag	L5 x 5 x 1/2	6	1	A709-50WT2	1130	CVN 99
5		1	x104aw	L5 x 5 x 1/2	6	1 11/16	A709-50WT2	1130	CVN 99
6		1	x105k	PL 1/2 x 25	2	2 1/2	A709-50WT2	1132	CVN BENT 94

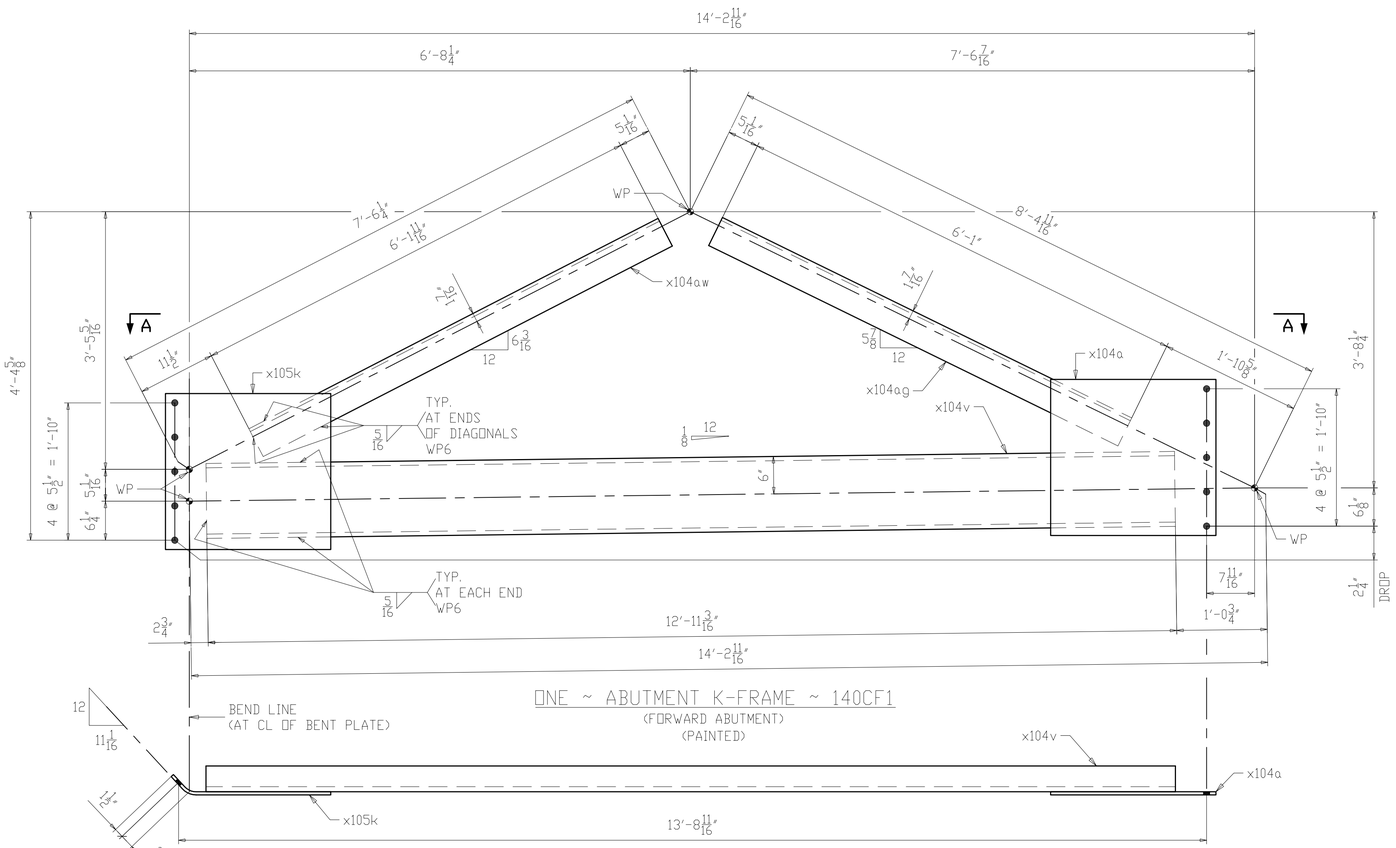

ONE ~ ABUTMENT K-FRAME ~ 140CF1
(FORWARD ABUTMENT)
(PAINTED)

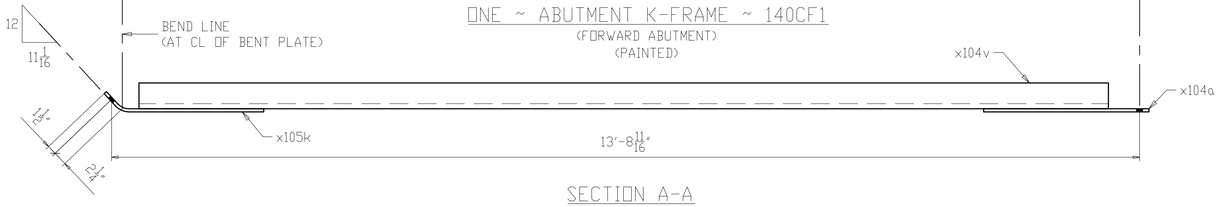

SECTION A-A

NOTES:
1. FOR GENERAL NOTES SEE SHEET GN101.
2. FOR PAINT NOTES SEE SHEET P101.
3. ALL MATERIAL A709-50WT2 (UN).
4. T2 - DENOTES MATERIAL SUBJECT TO CHARPY V-NOTCH TESTING.
5. FOR K-FRAME STANDARD DETAILS SEE X104 & X105.

NO.	DATE	REMARKS	BY

REVISIONS

Veritas STEEL
2-EAU CLAIRE, WI 3-WAUSAU, WI 4-PALATKA, FL
IENCA 1605

STRUCTURE: CUY-010-1978R, OH-10 EASTBOUND OVER GCRTA BLUE AND GREEN LINES
LOCATION: CLEVELAND, OHIO CUYAHOGA COUNTY
PROJECT NO. 17-3000
ENGINEER: MICHAEL BAKER INTERNATIONAL
CONTRACTOR: KOKOSING

ITEM: FORWARD ABUTMENT K-FRAME
SURFACE PREP. SEE P101 OPEN HOLES 1 1/16"Ø (U.N.O.)
PAINT: SEE P101

APPROVAL	DRAWN AM 05/22/19	SHEET NO.	PLANT	ORDER NO.
SHOP	CHECKED DP 06/21/19	140	3	317023A-37

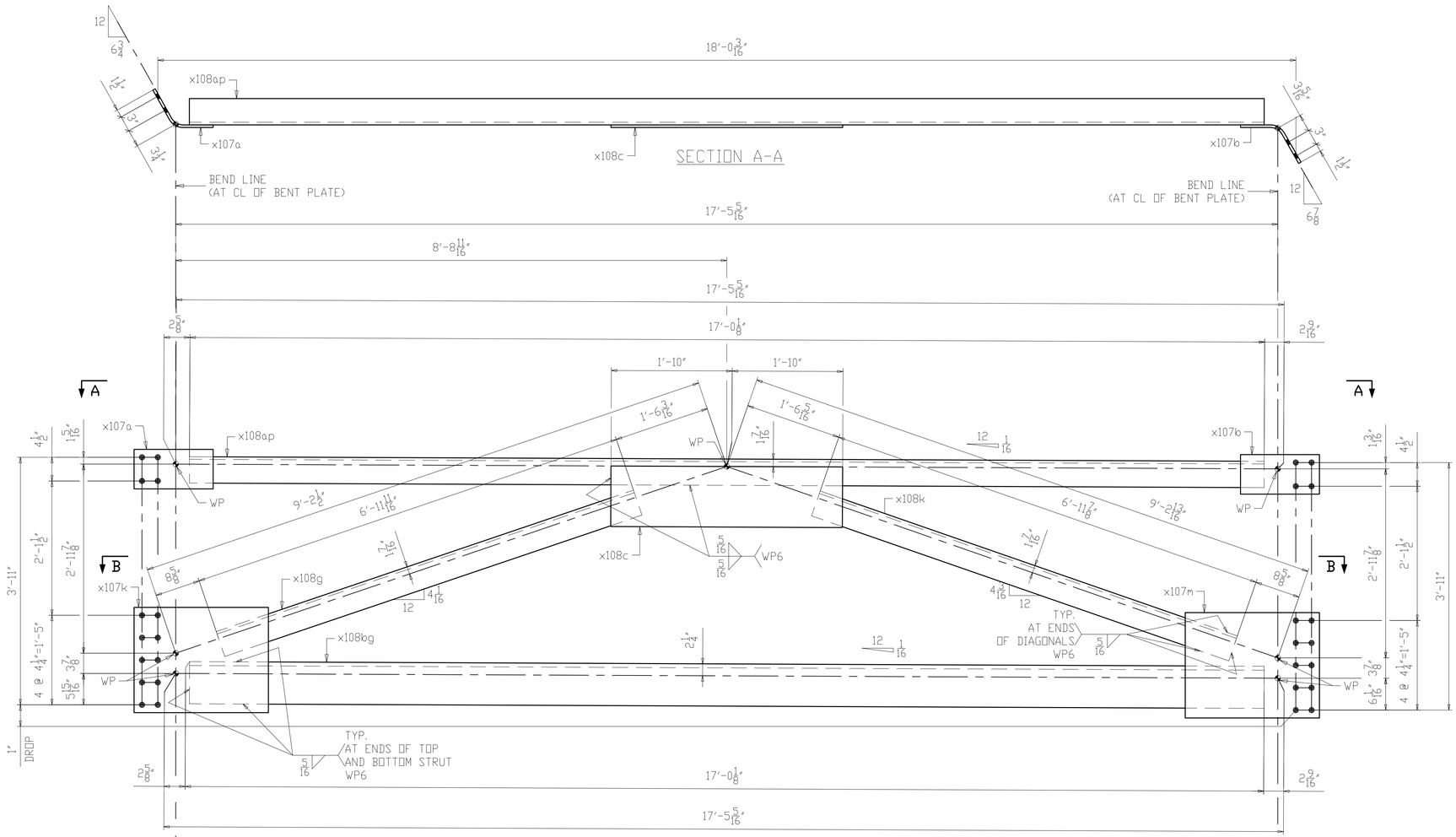

ONE ~ PIER K-FRAME ~ 141CF1
(PIER 1)

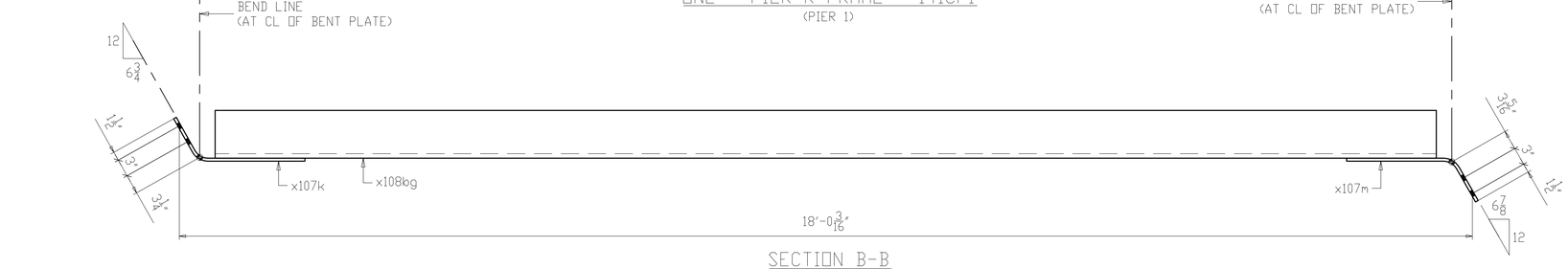

SECTION B-B

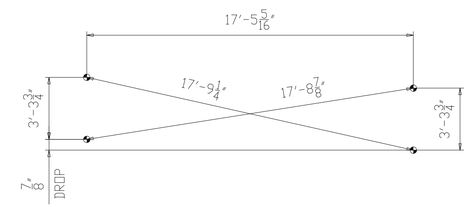

CROSS-CHECK DIAGRAM
(DIMENSIONS ARE GIVEN TO THE OUTERMOST WORKING POINTS)

LINE	SHIP MARK	NO. OF PCS.	ASS'Y MARK	MATERIAL SHAPE	LENGTH FT.	LENGTH IN.	MATERIAL SPEC.	ITEM NO.	REMARKS	
1	141CF1	ONE		PIER K-FRAME						1412
2		1	x107a	PL 1/2 x 7 1/2	1	3	A709-50WT2	1141	CVN BENT	16
3		1	x107b	PL 1/2 x 7 1/2	1	3	A709-50WT2	1141	CVN BENT	16
4		1	x107k	PL 1/2 x 20	2	1 1/2	A709-50WT2	1142	CVN BENT	72
5		1	x107m	PL 1/2 x 20	2	1 1/2	A709-50WT2	1142	CVN BENT	72
6		1	x108c	PL 1/2 x 11 1/2	3	8	A709-50WT2	1143	CVN	72
7		1	x108g	L5 x 5 x 1/2	6	11 11/16	A709-50WT2	1140	CVN	113
8		1	x108k	L5 x 5 x 1/2	6	11 7/8	A709-50WT2	1140	CVN	113
9		1	x108ap	L5 x 5 x 1/2	17	0 1/8	A709-50WT2	1138	CVN	276
10		1	x108bg	L8 x 8 x 3/4	17	0 1/8	A709-50WT2	1136	CVN	662

NOTES:
1. FOR GENERAL NOTES SEE SHEET GN101.
2. ALL MATERIAL A709-50WT2 (UN).
3. T2 - DENOTES MATERIAL SUBJECT TO CHARPY V-NOTCH TESTING.
4. FOR K-FRAME STANDARD DETAILS SEE X107 & X108.

NO.	DATE	REMARKS	BY

REVISIONS

Veritas STEEL
2-EAU CLAIRE, WI 3-WAUSAU, WI 4-PALATKA, FL
TENCA 1605

STRUCTURE: CUY-010-1978R, OH-10 EASTBOUND OVER GCRTA BLUE AND GREEN LINES
LOCATION: CLEVELAND, OHIO CUYAHOGA COUNTY
PROJECT NO.: 17-3000
ENGINEER: MICHAEL BAKER INTERNATIONAL
CONTRACTOR: KOKOSING

ITEM: PIER 1 K-FRAME
SURFACE PREP.: SEE P101 OPEN HOLES: 1 1/16"Ø (U.N.O.)
PAINT: SEE P101

APPROVAL	DRAWN AM 05/22/19	SHEET NO.	PLANT	ORDER NO.
SHOP	CHECKED DP 07/10/19	141	3	317023A-37

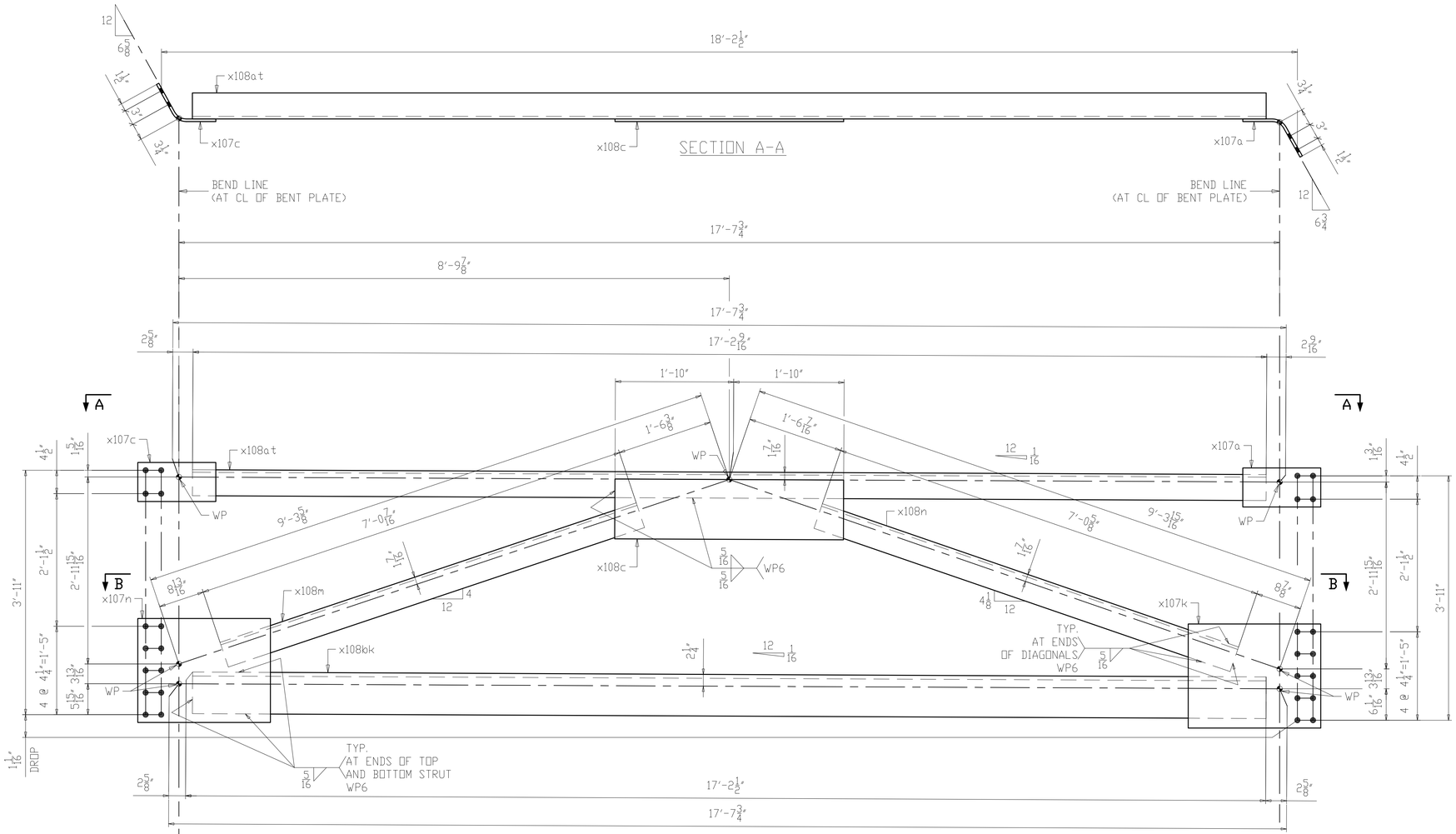

ONE ~ PIER K-FRAME ~ 142CF1

(PIER 1)

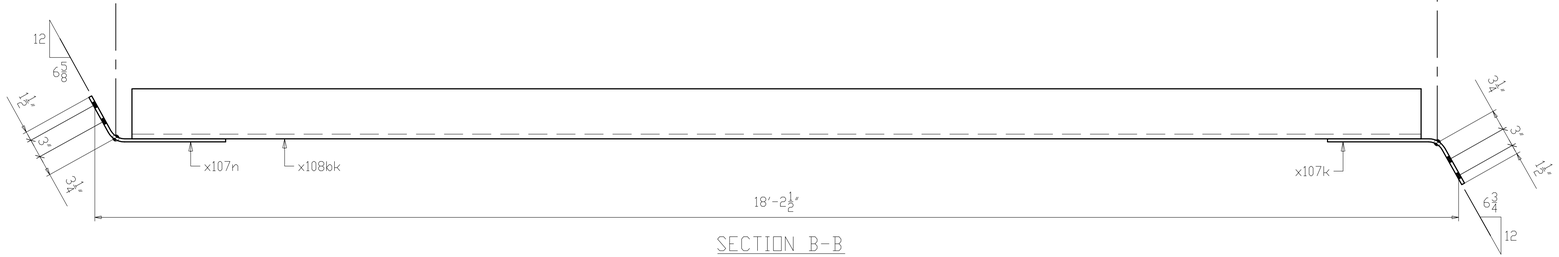

SECTION B-B

LINE	SHIP MARK	NO. OF PCS.	ASS'Y MARK	MATERIAL SHAPE	LENGTH FT.	LENGTH IN.	MATERIAL SPEC.	ITEM NO.	REMARKS
1	142CF1	ONE		PIER K-FRAME					1424
2		1	x107a	PL 1/2 x 7 1/2	1	3	A709-50WT2	1141	CVN BENT 16
3		1	x107c	PL 1/2 x 7 1/2	1	3	A709-50WT2	1141	CVN BENT 16
4		1	x107k	PL 1/2 x 20	2	1 1/2	A709-50WT2	1142	CVN BENT 72
5		1	x107n	PL 1/2 x 20	2	1 1/2	A709-50WT2	1142	CVN BENT 72
6		1	x108c	PL 1/2 x 11 1/2	3	8	A709-50WT2	1143	CVN 72
7		1	x108m	L5 x 5 x 1/2	7	0 7/16	A709-50WT2	1140	CVN 114
8		1	x108n	L5 x 5 x 1/2	7	0 5/8	A709-50WT2	1140	CVN 114
9		1	x108at	L5 x 5 x 1/2	17	2 9/16	A709-50WT2	1138	CVN 279
10		1	x108bk	L8 x 8 x 3/4	17	2 1/2	A709-50WT2	1136	CVN 669

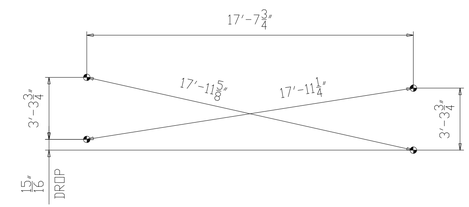

CROSS-CHECK DIAGRAM

(DIMENSIONS ARE GIVEN TO THE OUTERMOST WORKING POINTS)

NOTES:
1. FOR GENERAL NOTES SEE SHEET GN101.
2. ALL MATERIAL A709-50WT2 (UN).
3. T2 - DENOTES MATERIAL SUBJECT TO CHARPY V-NOTCH TESTING.
4. FOR K-FRAME STANDARD DETAILS SEE X107 & X108.

NO.	DATE	REMARKS	BY

REVISIONS

Veritas STEEL
2-EAU CLAIRE, WI 3-WAUSAU, WI 4-PALATKA, FL
IENCA 1605

STRUCTURE	CUY-010-1978R, OH-10 EASTBOUND OVER GCRTA BLUE AND GREEN LINES
LOCATION	CLEVELAND, OHIO CUYAHOGA COUNTY
PROJECT NO.	17-3000
ENGINEER	MICHAEL BAKER INTERNATIONAL
CONTRACTOR	KOKOSING
ITEM	PIER 1 K-FRAME
SURFACE PREP.	SEE P101
OPEN HOLES	1 1/16"ø (U.N.O.)
PAINT	SEE P101

APPROVAL	DRAWN AM 05/22/19	SHEET NO.	PLANT	ORDER NO.
SHOP	CHECKED DP 07/10/19	142	3	317023A-37

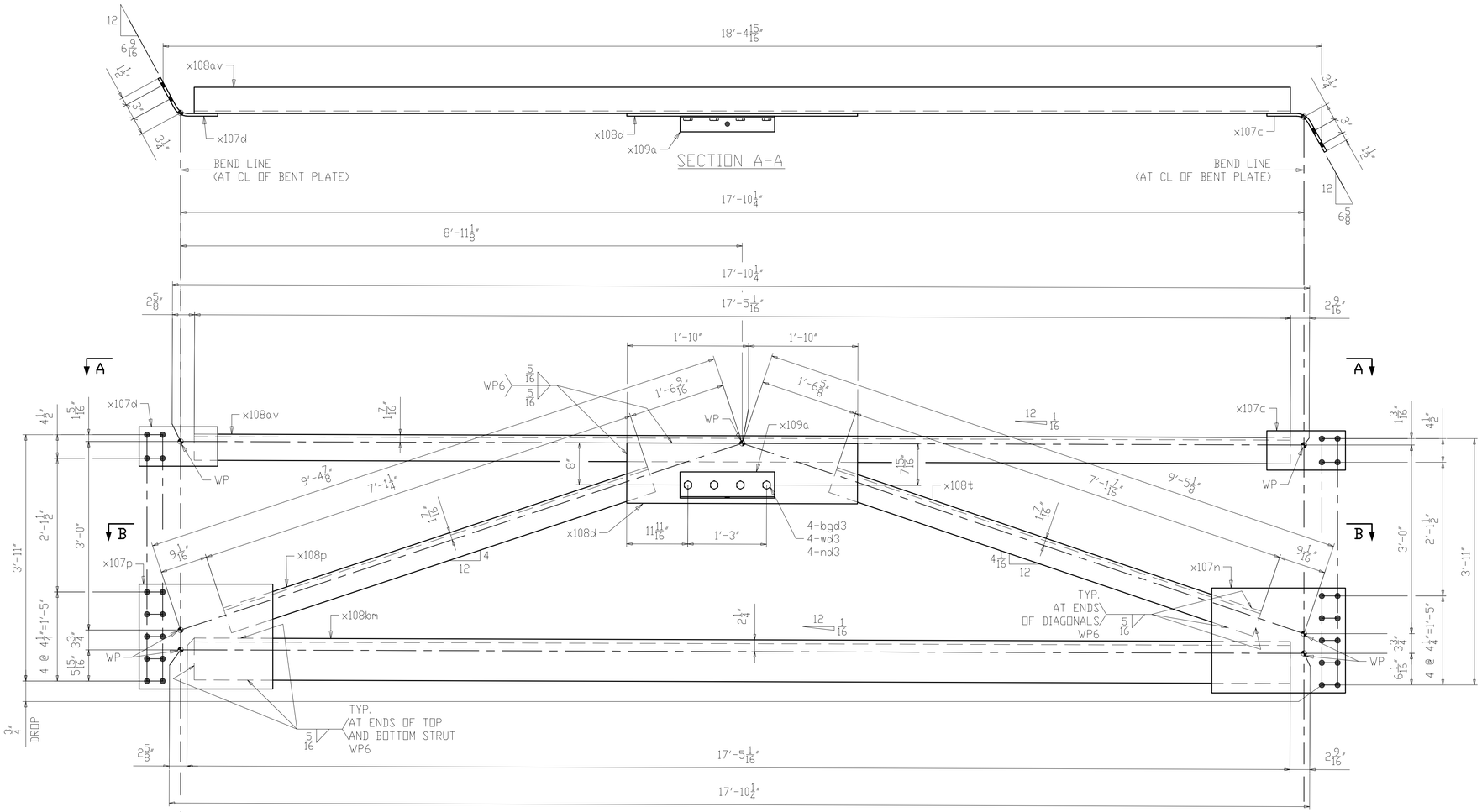

ONE ~ PIER K-FRAME ~ 143CF1

(PIER 1)

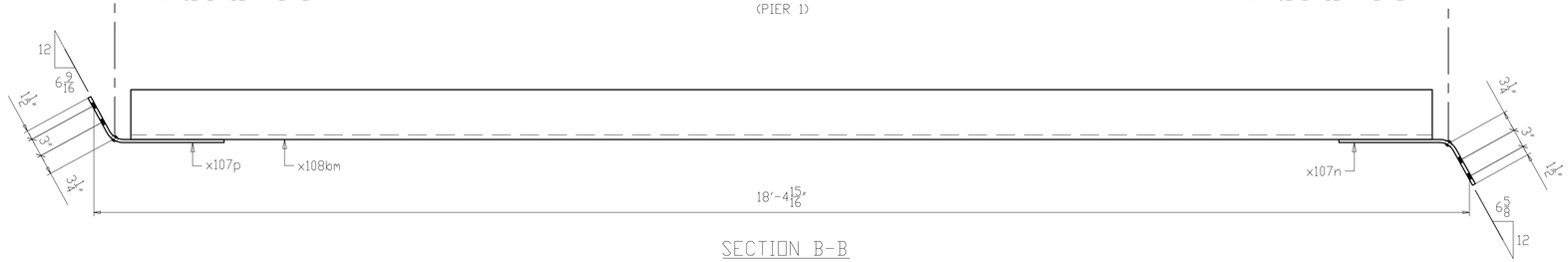

SECTION B-B

LINE	SHIP MARK	NO. OF PCS.	ASS'Y MARK	MATERIAL SHAPE	LENGTH FT.	LENGTH IN.	MATERIAL SPEC.	ITEM NO.	REMARKS
1	143CF1	ONE		PIER K-FRAME					1448
2		1	x107c	PL 1/2 x 7 1/2	1	3	A709-50WT2	1141	CVN BENT 16
3		1	x107d	PL 1/2 x 7 1/2	1	3	A709-50WT2	1141	CVN BENT 16
4		1	x107n	PL 1/2 x 20	2	1 1/2	A709-50WT2	1142	CVN BENT 72
5		1	x107p	PL 1/2 x 20	2	1 1/2	A709-50WT2	1142	CVN BENT 72
6		1	x108d	PL 1/2 x 11 1/2	3	8	A709-50WT2	1143	CVN 72
7		1	x108p	L5 x 5 x 1/2	7	1 1/4	A709-50WT2	1140	CVN 115
8		1	x108t	L5 x 5 x 1/2	7	1 7/16	A709-50WT2	1140	CVN 115
9		1	x108av	L5 x 5 x 1/2	17	5 1/16	A709-50WT2	1138	CVN 282
10		1	x108bm	L8 x 8 x 3/4	17	5 1/16	A709-50WT2	1136	CVN 678
11		1	x109a	L5 x 3 x 1/4	1	6	A709-50W	1166	10
12									
13				SHOP BOLT					
14		4	bgd3	1Ø HSB		2 1/4	A325-3	1206	
15		4	wd3	1Ø HSW			F436-3	1207	
16		4	nd3	1Ø HHN			A563-DH3	1208	

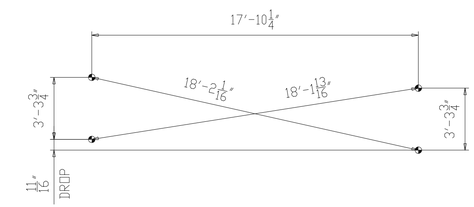

CROSS-CHECK DIAGRAM

(DIMENSIONS ARE GIVEN TO THE OUTERMOST WORKING POINTS)

NOTES:
1. FOR GENERAL NOTES SEE SHEET GN101.
2. ALL MATERIAL A709-50WT2 (UN).
3. T2 - DENOTES MATERIAL SUBJECT TO CHARPY V-NOTCH TESTING.
4. FOR K-FRAME STANDARD DETAILS SEE X107, X108 & X109.

NO.	DATE	REMARKS	BY

REVISIONS

Veritas STEEL
2-EAU CLAIRE, WI 3-WAUSAU, WI 4-PALATKA, FL
IENCA 1605

STRUCTURE: CUY-010-1978R, OH-10 EASTBOUND OVER GCRTA BLUE AND GREEN LINES
LOCATION: CLEVELAND, OHIO CUYAHOGA COUNTY
PROJECT NO.: 17-3000
ENGINEER: MICHAEL BAKER INTERNATIONAL
CONTRACTOR: KOKOSING

ITEM: PIER 1 K-FRAME
SURFACE PREP.: SEE P101 OPEN HOLES: 1 1/16"Ø (U.N.O.)
PAINT: SEE P101

APPROVAL	DRAWN AM 05/22/19	SHEET NO.	PLANT	ORDER NO.
SHOP	CHECKED DP 07/10/19	143	3	317023A-37

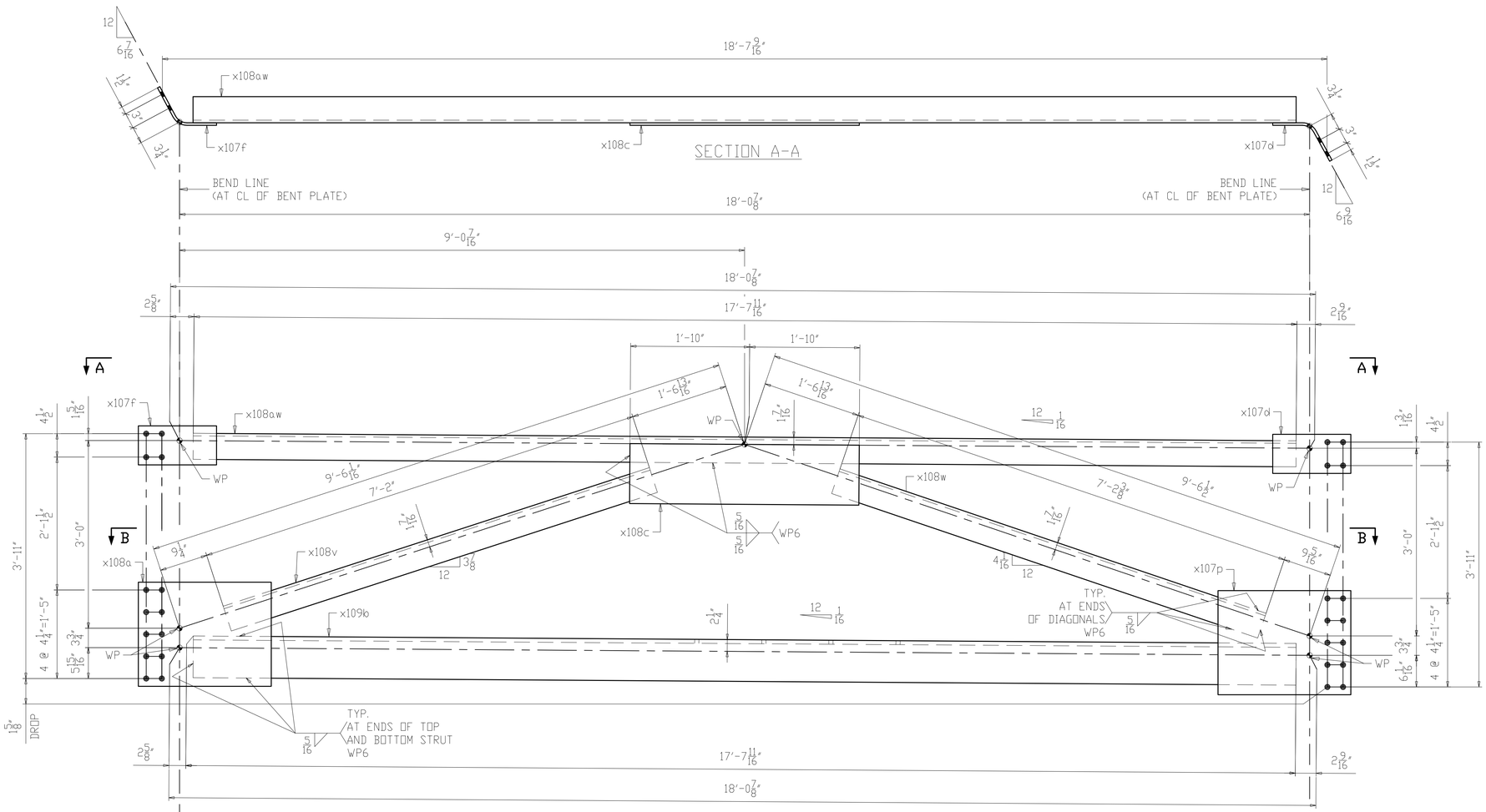

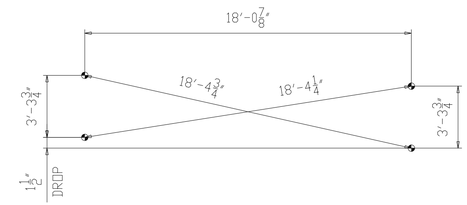

CROSS-CHECK DIAGRAM

(DIMENSIONS ARE GIVEN TO THE OUTERMOST WORKING POINTS)

ONE ~ PIER K-FRAME ~ 144CF1

(PIER 1)

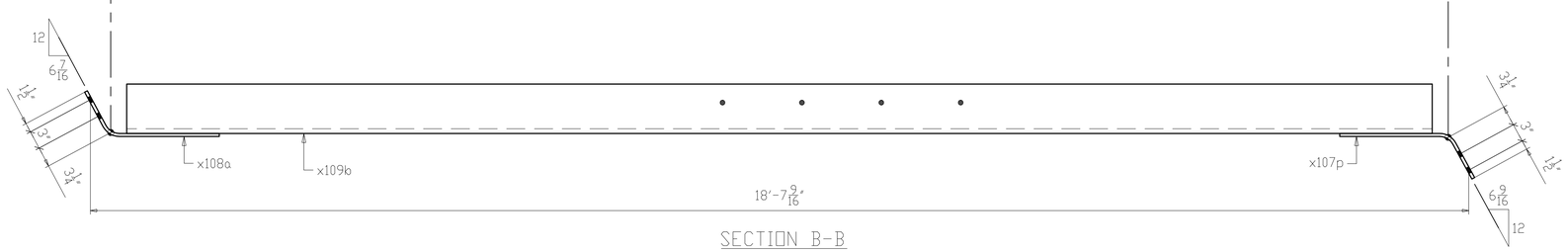

SECTION B-B

LINE	SHIP MARK	NO. OF PCS.	ASS'Y MARK	MATERIAL SHAPE	LENGTH FT.	LENGTH IN.	MATERIAL SPEC.	ITEM NO.	REMARKS	
1	144CF1	ONE		PIER K-FRAME						1453
2		1	x107d	PL 1/2 x 7 1/2	1	3	A709-50WT2	1141	CVN BENT	16
3		1	x107f	PL 1/2 x 7 1/2	1	3	A709-50WT2	1141	CVN BENT	16
4		1	x107p	PL 1/2 x 20	2	1 1/2	A709-50WT2	1142	CVN BENT	72
5		1	x108a	PL 1/2 x 20	2	1 1/2	A709-50WT2	1142	CVN BENT	72
6		1	x108c	PL 1/2 x 11 1/2	3	8	A709-50WT2	1143	CVN	72
7		1	x108v	L5 x 5 x 1/2	7	2	A709-50WT2	1140	CVN	116
8		1	x108w	L5 x 5 x 1/2	7	2 3/8	A709-50WT2	1140	CVN	117
9		1	x108aw	L5 x 5 x 1/2	17	7 11/16	A709-50WT2	1138	CVN	286
10		1	x109b	L8 x 8 x 3/4	17	7 11/16	A709-50WT2	1136	CVN	686

NOTES:
1. FOR GENERAL NOTES SEE SHEET GN101.
2. ALL MATERIAL A709-50WT2 (UN).
3. T2 - DENOTES MATERIAL SUBJECT TO CHARPY V-NOTCH TESTING.
4. FOR K-FRAME STANDARD DETAILS SEE X107, X108 & X109.

NO.	DATE	REMARKS	BY

REVISIONS

Veritas STEEL
2-EAU CLAIRE, WI 3-WAUSAU, WI 4-PALATKA, FL
IAS NCA 1605

STRUCTURE: CUY-010-1978R, OH-10 EASTBOUND OVER GCRTA BLUE AND GREEN LINES
LOCATION: CLEVELAND, OHIO CUYAHOGA COUNTY
PROJECT NO.: 17-3000
ENGINEER: MICHAEL BAKER INTERNATIONAL
CONTRACTOR: KOKOSING

ITEM: PIER 1 K-FRAME
SURFACE PREP.: SEE P101 OPEN HOLES: 1 1/16"Ø (U.N.O.)
PAINT: SEE P101

APPROVAL	DRAWN AM 05/22/19	SHEET NO.	PLANT	ORDER NO.
SHOP	CHECKED DP 07/10/19	144	3	317023A-37

ITEM	SHIP MARK	NO. OF PCS.	ASS'Y MARK	MATERIAL SHAPE	LENGTH FT.	LENGTH IN.	MATERIAL SPEC.	ITEM NO.	REMARKS	
1	145CF1	ONE		PIER K-FRAME						1467
2		1	x107f	PL 1/2 x 7 1/2	1	3	A709-50WT2	1141	CVN BENT	16
3		1	x107g	PL 1/2 x 7 1/2	1	3	A709-50WT2	1141	CVN BENT	16
4		1	x108a	PL 1/2 x 20	2	1 1/2	A709-50WT2	1142	CVN BENT	72
5		1	x108b	PL 1/2 x 20	2	1 1/2	A709-50WT2	1142	CVN BENT	72
6		1	x108c	PL 1/2 x 11 1/2	3	8	A709-50WT2	1143	CVN	72
7		1	x108y	L5 x 5 x 1/2	7	2 13/16	A709-50WT2	1140	CVN	117
8		1	x108aa	L5 x 5 x 1/2	7	3 1/4	A709-50WT2	1140	CVN	118
9		1	x108ay	L5 x 5 x 1/2	17	10 7/16	A709-50WT2	1138	CVN	289
10		1	x108bn	L8 x 8 x 3/4	17	10 7/16	A709-50WT2	1136	CVN	695

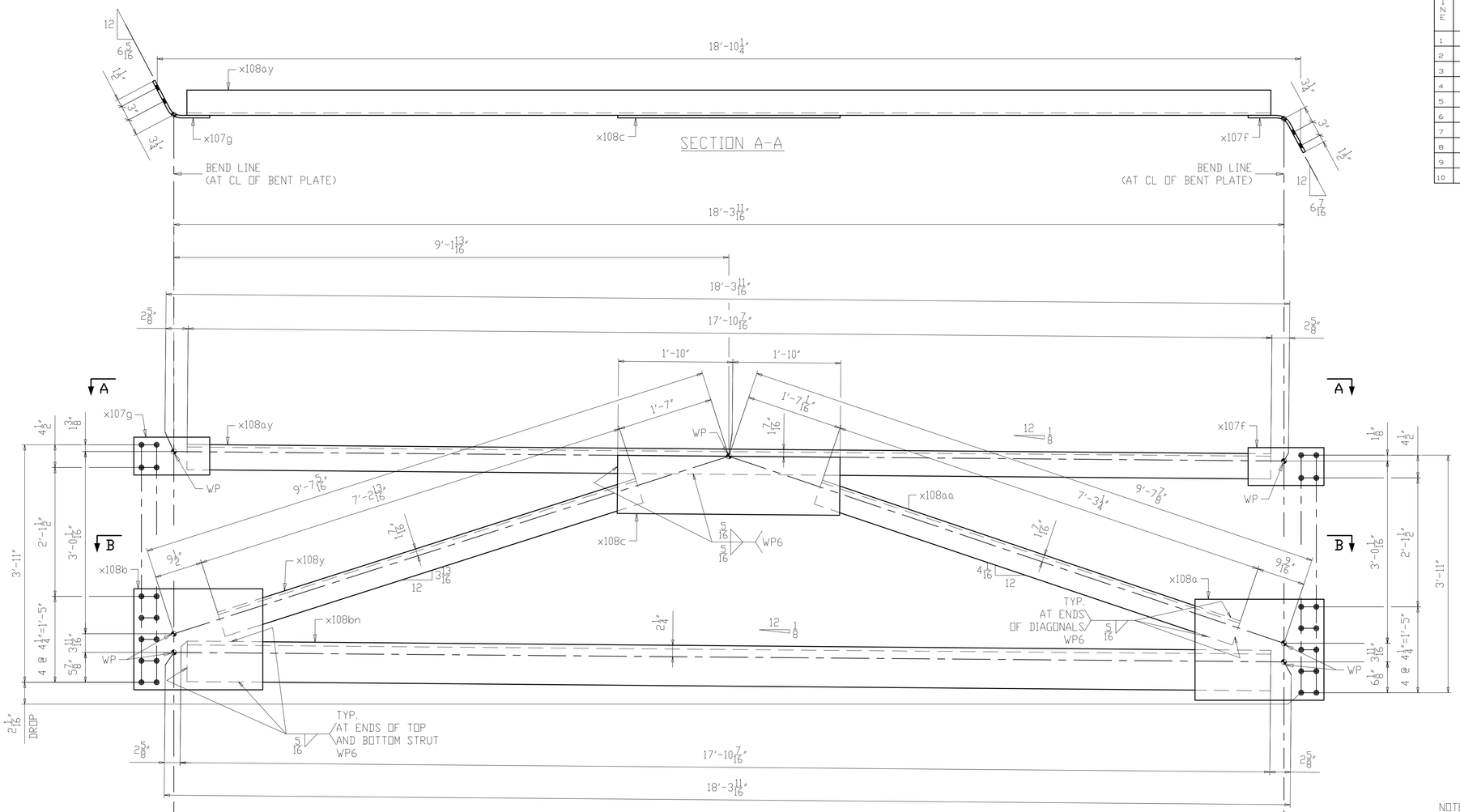

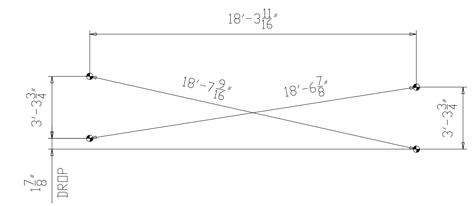

CROSS-CHECK DIAGRAM

(DIMENSIONS ARE GIVEN TO THE OUTERMOST WORKING POINTS)

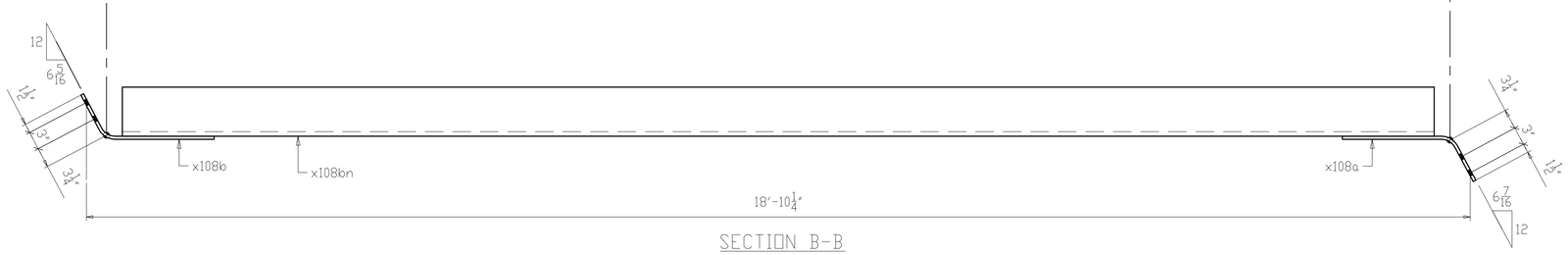

SECTION B-B

NOTES:
1. FOR GENERAL NOTES SEE SHEET GN101.
2. ALL MATERIAL A709-50WT2 (UN).
3. T2 - DENOTES MATERIAL SUBJECT TO CHARPY V-NOTCH TESTING.
4. FOR K-FRAME STANDARD DETAILS SEE X107 & X108.

NO.	DATE	REMARKS	BY

REVISIONS

Veritas STEEL
2-EAU CLAIRE, WI 3-WAUSAU, WI 4-PALATKA, FL
IENCA 1605

STRUCTURE	CUY-010-1978R, OH-10 EASTBOUND OVER GCRTA BLUE AND GREEN LINES
LOCATION	CLEVELAND, OHIO CUYAHOGA COUNTY
PROJECT NO.	17-3000
ENGINEER	MICHAEL BAKER INTERNATIONAL
CONTRACTOR	KOKOSING
ITEM	PIER 1 K-FRAME
SURFACE PREP.	SEE P101
OPEN HOLES	$1\frac{1}{16}$"Ø (U.N.O.)
PAINT	SEE P101

APPROVAL	DRAWN AM 05/22/19	SHEET NO.	PLANT	ORDER NO.
SHOP	CHECKED DP 07/10/19	145	3	317023A-37

LINE	SHIP MARK	NO. OF PCS.	ASS'Y MARK	MATERIAL SHAPE	LENGTH FT.	LENGTH IN.	MATERIAL SPEC.	ITEM NO.	REMARKS
1	146CF1	ONE		PIER K-FRAME					1231
2		1	x108c	PL 1/2 x 11 1/2	3	8	A709-50WT2	1143	CVN 72
3		1	x108ab	L5 x 5 x 1/2	6	1 13/16	A709-50WT2	1139	CVN 100
4		1	x108ac	L5 x 5 x 1/2	6	0 15/16	A709-50WT2	1139	CVN 98
5		1	x108ba	L5 x 5 x 1/2	14	2 7/8	A709-50WT2	1137	CVN 231
6		1	x108bp	L8 x 8 x 3/4	14	2 13/16	A709-50WT2	1135	CVN 554
7		1	x109d	PL 1/2 x 7 1/2	1	3	A709-50WT2	1141	CVN BENT 16
8		1	x109f	PL 1/2 x 7 1/2	1	3	A709-50WT2	1141	CVN BENT 16
9		1	x110a	PL 1/2 x 20	2	1 1/2	A709-50WT2	1142	CVN BENT 72
10		1	x110b	PL 1/2 x 20	2	1 1/2	A709-50WT2	1142	CVN BENT 72

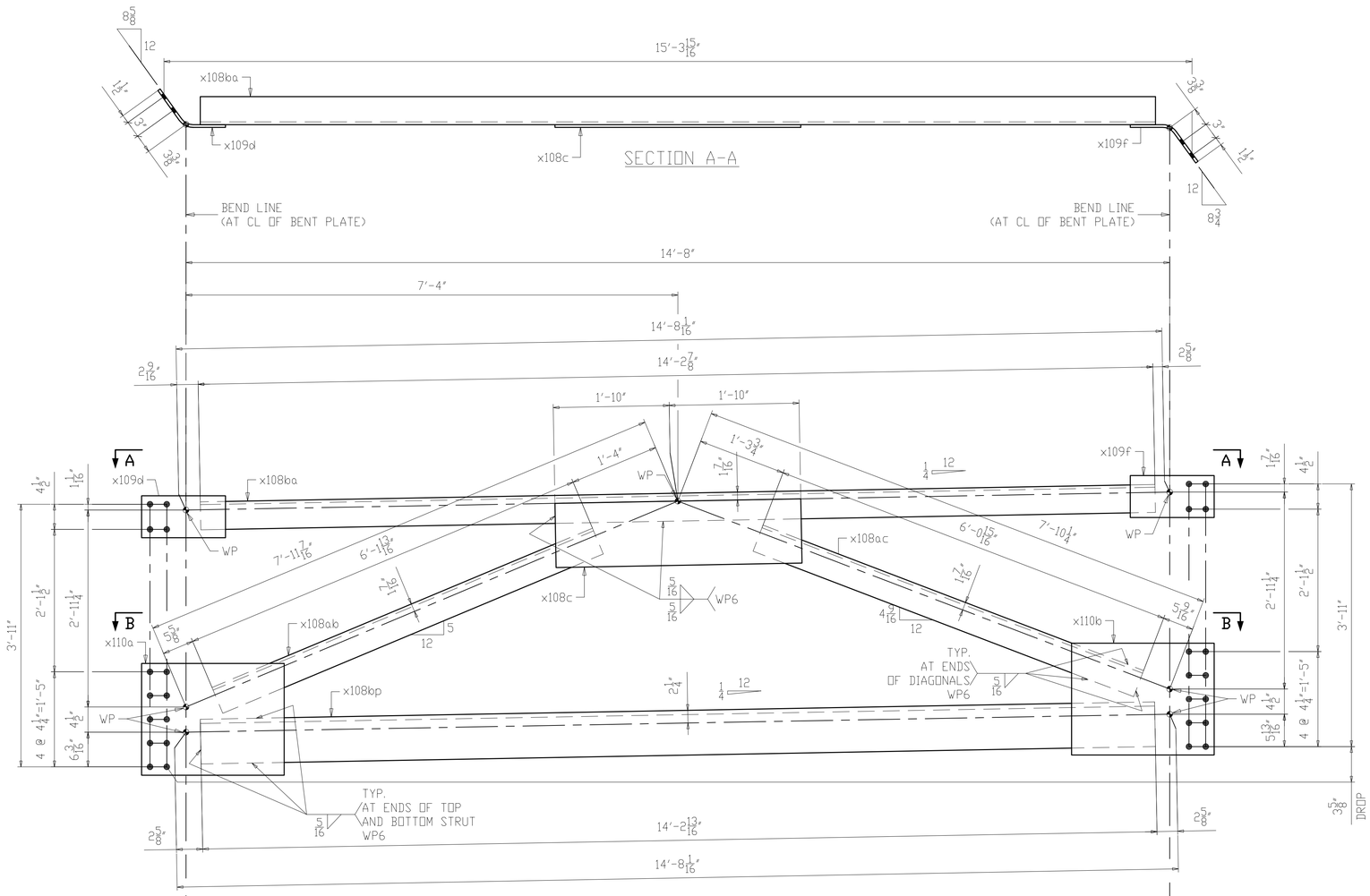

ONE ~ PIER K-FRAME ~ 146CF1
(PIER 2)

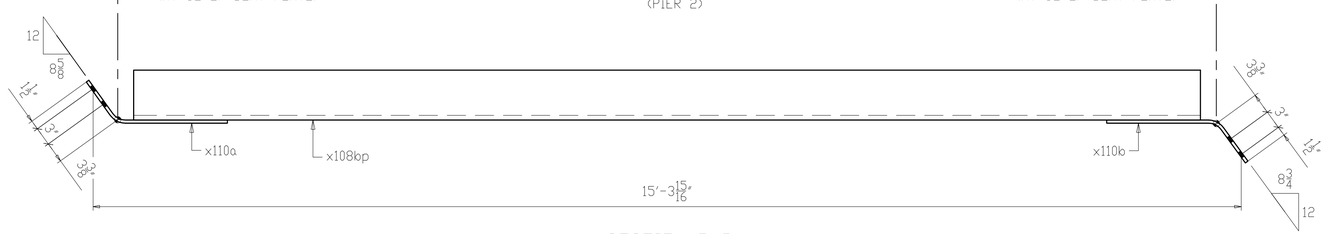

SECTION B-B

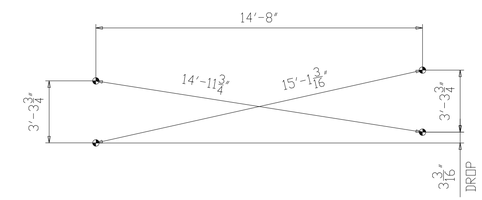

CROSS-CHECK DIAGRAM
(DIMENSIONS ARE GIVEN TO THE OUTERMOST WORKING POINTS)

NOTES:
1. FOR GENERAL NOTES SEE SHEET GN101.
2. ALL MATERIAL A709-50WT2 (UN).
3. T2 - DENOTES MATERIAL SUBJECT TO CHARPY V-NOTCH TESTING.
4. FOR K-FRAME STANDARD DETAILS SEE X108, X109 & X110.

NO.	DATE	REMARKS	BY

REVISIONS

Veritas STEEL
2-EAU CLAIRE, WI 3-WAUSAU, WI 4-PALATKA, FL
IAS 1605

STRUCTURE	CUY-010-1978R, OH-10 EASTBOUND OVER GCRTA BLUE AND GREEN LINES
LOCATION	CLEVELAND, OHIO CUYAHOGA COUNTY
PROJECT NO.	17-3000
ENGINEER	MICHAEL BAKER INTERNATIONAL
CONTRACTOR	KOKOSING
ITEM	PIER 2 K-FRAME
SURFACE PREP.	SEE P101 OPEN HOLES 1 1/16"Ø (U.N.O.)
PAINT	SEE P101

APPROVAL	DRAWN AM 05/22/19	SHEET NO.	PLANT	ORDER NO.
SHOP	CHECKED DP 07/10/19	146	3	317023A-37

LINE	SHIP MARK	NO. OF PCS.	ASS'Y MARK	MATERIAL SHAPE	LENGTH FT.	LENGTH IN.	MATERIAL SPEC.	ITEM NO.	REMARKS
1	147CF1	ONE		PIER K-FRAME					1237
2		1	x108c	PL 1/2 x 11 1/2	3	8	A709-50WT2	1143	CVN 72
3		1	x108ad	L5 x 5 x 1/2	6	2 1/4	A709-50WT2	1139	CVN 100
4		1	x108af	L5 x 5 x 1/2	6	1 1/4	A709-50WT2	1139	CVN 99
5		1	x108bb	L5 x 5 x 1/2	14	4 1/8	A709-50WT2	1137	CVN 232
6		1	x108bt	L8 x 8 x 3/4	14	4 1/16	A709-50WT2	1135	CVN 558
7		1	x109d	PL 1/2 x 7 1/2	1	3	A709-50WT2	1141	CVN BENT 16
8		1	x109g	PL 1/2 x 7 1/2	1	3	A709-50WT2	1141	CVN BENT 16
9		1	x110a	PL 1/2 x 20	2	1 1/2	A709-50WT2	1142	CVN BENT 72
10		1	x110c	PL 1/2 x 20	2	1 1/2	A709-50WT2	1142	CVN BENT 72

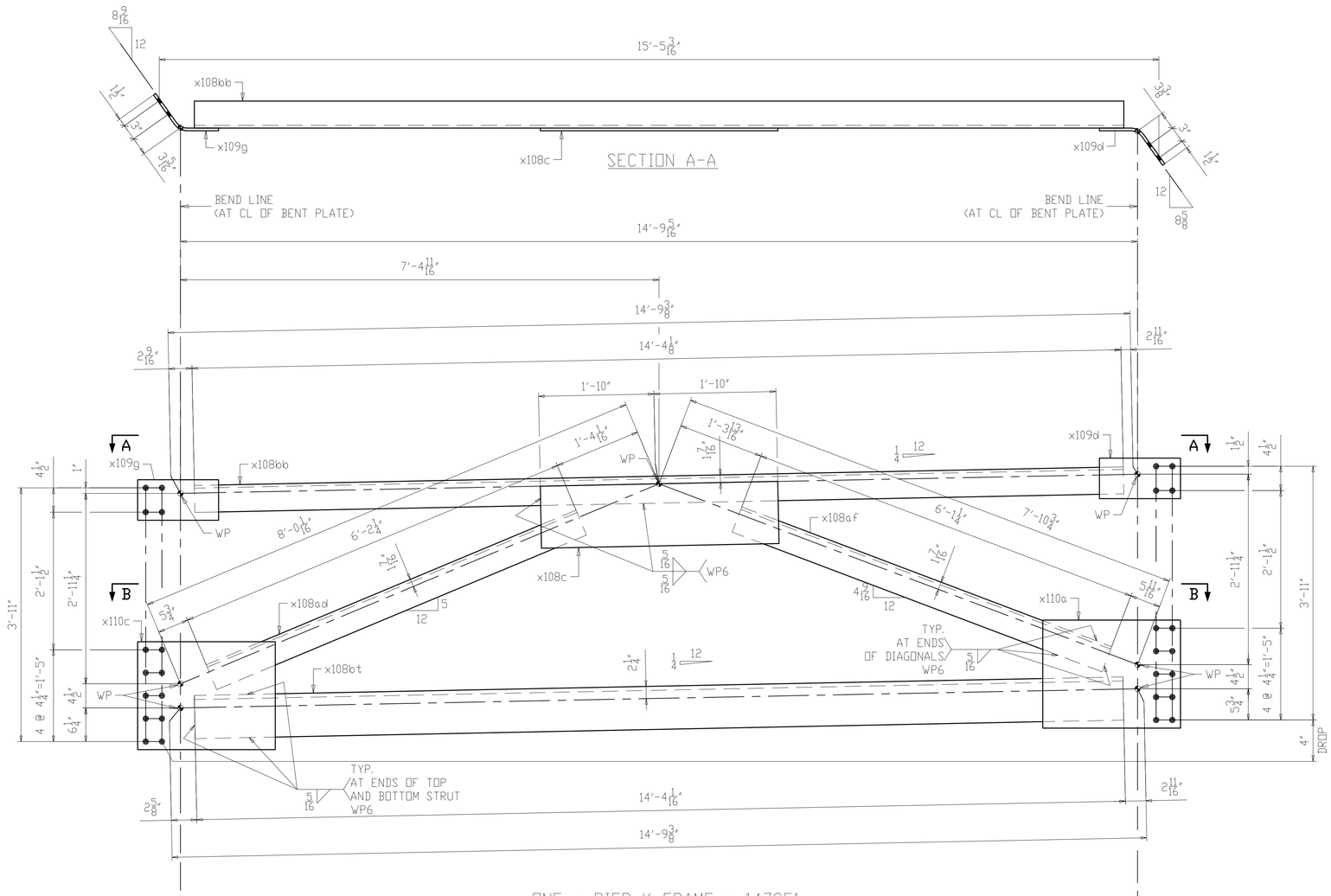

ONE ~ PIER K-FRAME ~ 147CF1
(PIER 2)

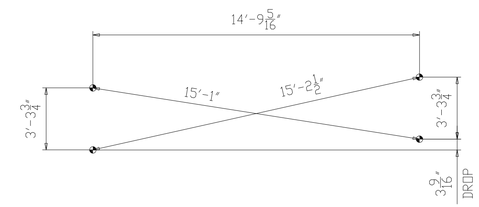

CROSS-CHECK DIAGRAM
(DIMENSIONS ARE GIVEN TO THE OUTERMOST WORKING POINTS)

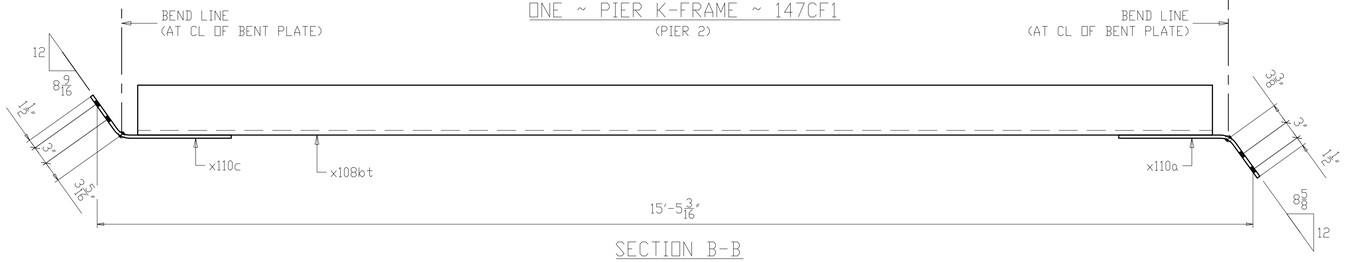

SECTION B-B

NOTES:
1. FOR GENERAL NOTES SEE SHEET GN101.
2. ALL MATERIAL A709-50WT2 (UN).
3. T2 - DENOTES MATERIAL SUBJECT TO CHARPY V-NOTCH TESTING.
4. FOR K-FRAME STANDARD DETAILS SEE X108, X109 & X110.

NO.	DATE	REMARKS	BY
△			

REVISIONS

Veritas STEEL
2-EAU CLAIRE, WI 3-WAUSAU, WI 4-PALATKA, FL
IENCA 1605

STRUCTURE: CUY-010-1978R, OH-10 EASTBOUND OVER GCRTA BLUE AND GREEN LINES
LOCATION: CLEVELAND, OHIO CUYAHOGA COUNTY
PROJECT NO. 17-3000
ENGINEER MICHAEL BAKER INTERNATIONAL
CONTRACTOR KOKOSING

ITEM PIER 2 K-FRAME
SURFACE PREP. SEE P101 OPEN HOLES $1\frac{1}{16}$"Ø (U.N.O.)
PAINT SEE P101

APPROVAL	DRAWN AM 05/22/19	SHEET NO.	PLANT	ORDER NO.
SHOP	CHECKED DP 07/10/19	147	3	317023A-37

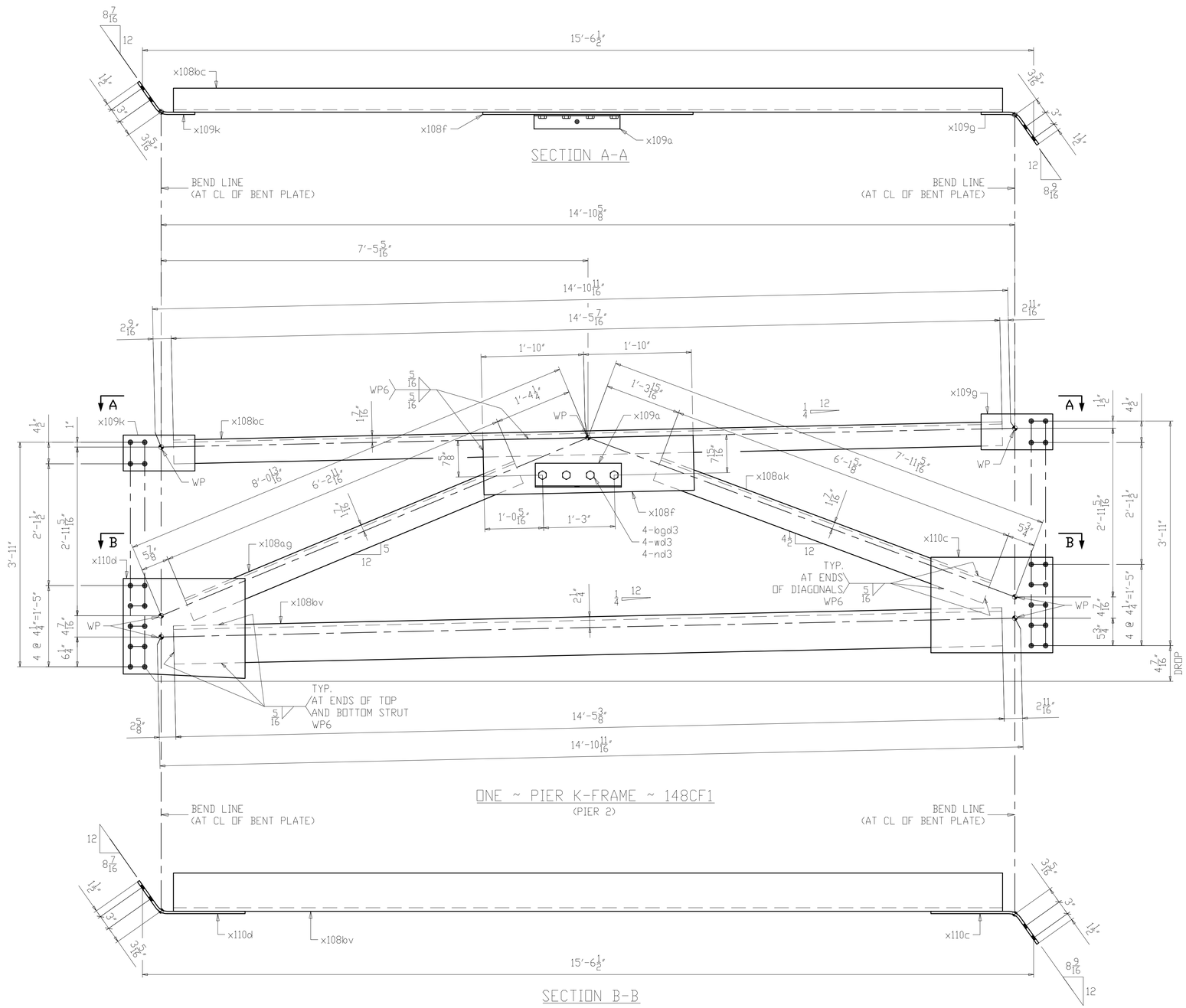

LINE	SHIP MARK	NO. OF PCS.	ASS'Y MARK	MATERIAL SHAPE	LENGTH FT.	LENGTH IN.	MATERIAL SPEC.	ITEM NO.	REMARKS
1	148CF1	ONE		PIER K-FRAME					1254
2		1	x108f	PL 1/2 x 11 1/2	3	8	A709-50WT2	1143	CVN 72
3		1	x108ag	L5 x 5 x 1/2	6	2 11/16	A709-50WT2	1139	CVN 101
4		1	x108ak	L5 x 5 x 1/2	6	1 5/8	A709-50WT2	1139	CVN 99
5		1	x108bc	L5 x 5 x 1/2	14	5 7/16	A709-50WT2	1137	CVN 234
6		1	x108bv	L8 x 8 x 3/4	14	5 3/8	A709-50WT2	1135	CVN 562
7		1	x109a	L5 x 3 x 1/4	1	6	A709-50W	1166	10
8		1	x109g	PL 1/2 x 7 1/2	1	3	A709-50WT2	1141	CVN BENT 16
9		1	x109k	PL 1/2 x 7 1/2	1	3	A709-50WT2	1141	CVN BENT 16
10		1	x110c	PL 1/2 x 20	2	1 1/2	A709-50WT2	1142	CVN BENT 72
11		1	x110d	PL 1/2 x 20	2	1 1/2	A709-50WT2	1142	CVN BENT 72
12									
13				SHOP BOLT					
14		4	bgd3	1Ø HSB		2 1/4	A325-3	1206	
15		4	wd3	1Ø HSW			F436-3	1207	
16		4	nd3	1Ø HHN			A563-DH3	1208	

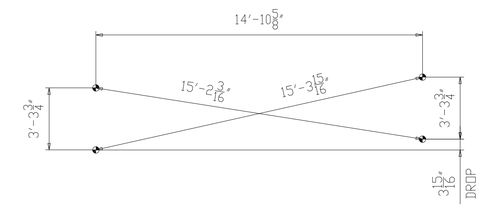

CROSS-CHECK DIAGRAM
(DIMENSIONS ARE GIVEN TO THE OUTERMOST WORKING POINTS)

NOTES:
1. FOR GENERAL NOTES SEE SHEET GN101.
2. ALL MATERIAL A709-50WT2 (UN).
3. T2 - DENOTES MATERIAL SUBJECT TO CHARPY V-NOTCH TESTING.
4. FOR K-FRAME STANDARD DETAILS SEE X108, X109 & X110.

NO.	DATE	REMARKS	BY

REVISIONS

Veritas STEEL
2-EAU CLAIRE, WI 3-WAUSAU, WI 4-PALATKA, FL
TENCA 1605

STRUCTURE	CUY-010-1978R, OH-10 EASTBOUND OVER GCRTA BLUE AND GREEN LINES
LOCATION	CLEVELAND, OHIO CUYAHOGA COUNTY
PROJECT NO.	17-3000
ENGINEER	MICHAEL BAKER INTERNATIONAL
CONTRACTOR	KOKOSING
ITEM	PIER 2 K-FRAME
SURFACE PREP.	SEE P101 OPEN HOLES 1 1/16"Ø (U.N.O.)
PAINT	SEE P101

APPROVAL	DRAWN AM 05/22/19	SHEET NO.	PLANT	ORDER NO.
SHOP	CHECKED DP 07/10/19	148	3	317023A-37

LINE	SHIP MARK	NO. OF PCS.	ASS'Y MARK	MATERIAL SHAPE	LENGTH FT.	LENGTH IN.	MATERIAL SPEC.	ITEM NO.	REMARKS
1	149CF1	ONE		PIER K-FRAME					1252
2		1	x108c	PL 1/2 x 11 1/2	3	8	A709-50WT2	1143	CVN 72
3		1	x108am	L5 x 5 x 1/2	6	3	A709-50WT2	1139	CVN 101
4		1	x108bd	L5 x 5 x 1/2	14	6 13/16	A709-50WT2	1137	CVN 236
5		1	x108by	L5 x 5 x 1/2	6	2 3/16	A709-50WT2	1139	CVN 100
6		1	x109c	L8 x 8 x 3/4	14	6 13/16	A709-50WT2	1135	CVN 567
7		1	x109k	PL 1/2 x 7 1/2	1	3	A709-50WT2	1141	CVN BENT 16
8		1	x109m	PL 1/2 x 7 1/2	1	3	A709-50WT2	1141	CVN BENT 16
9		1	x110d	PL 1/2 x 20	2	1 1/2	A709-50WT2	1142	CVN BENT 72
10		1	x110f	PL 1/2 x 20	2	1 1/2	A709-50WT2	1142	CVN BENT 72

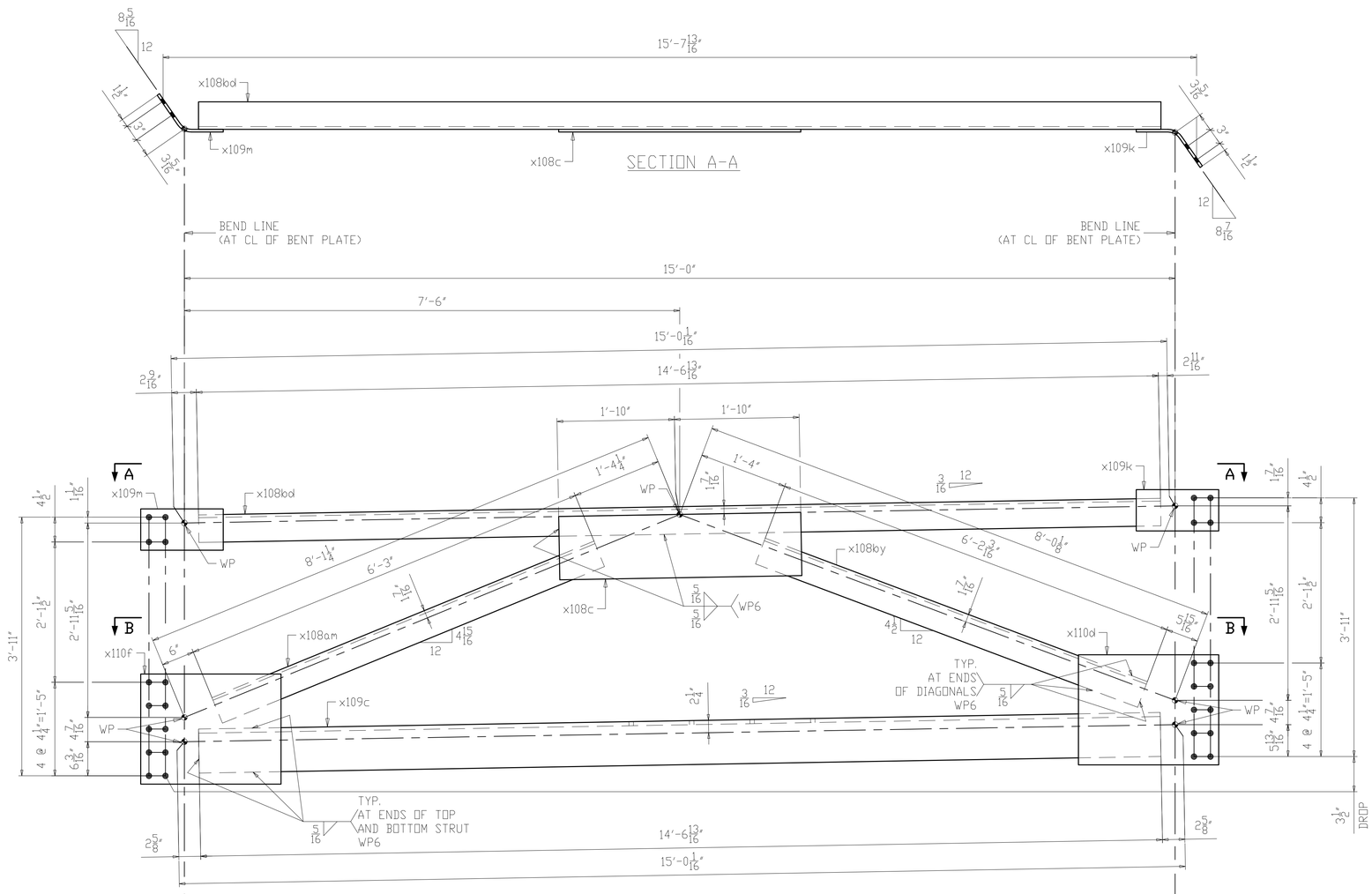

ONE ~ PIER K-FRAME ~ 149CF1
(PIER 2)

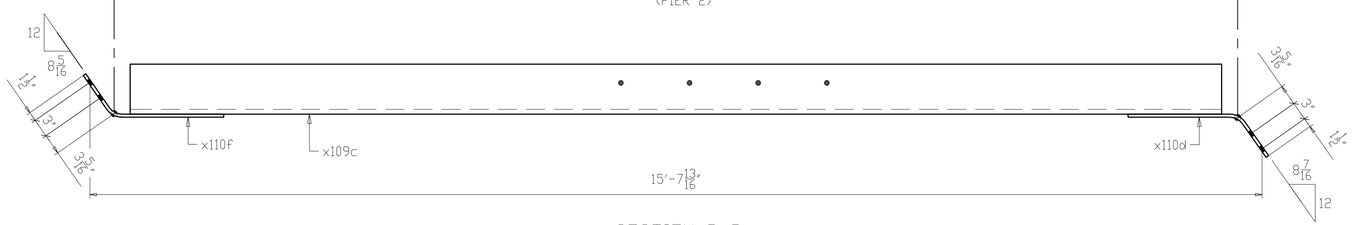

SECTION B-B

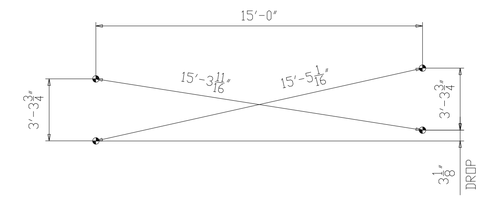

CROSS-CHECK DIAGRAM
(DIMENSIONS ARE GIVEN TO THE OUTERMOST WORKING POINTS)

NOTES:
1. FOR GENERAL NOTES SEE SHEET GN101.
2. ALL MATERIAL A709-50WT2 (UN).
3. T2 - DENOTES MATERIAL SUBJECT TO CHARPY V-NOTCH TESTING.
4. FOR K-FRAME STANDARD DETAILS SEE X108, X109 & X110.

NO.	DATE	REMARKS	BY

REVISIONS

Veritas STEEL
2-EAU CLAIRE, WI 3-WAUSAU, WI 4-PALATKA, FL
IENCA 1605

STRUCTURE	CUY-010-1978R, OH-10 EASTBOUND OVER GCRTA BLUE AND GREEN LINES
LOCATION	CLEVELAND, OHIO CUYAHOGA COUNTY
PROJECT NO.	17-3000
ENGINEER	MICHAEL BAKER INTERNATIONAL
CONTRACTOR	KOKOSING
ITEM	PIER 2 K-FRAME
SURFACE PREP.	SEE P101 OPEN HOLES 1 1/16"Ø (U.N.O.)
PAINT	SEE P101

APPROVAL	DRAWN AM 05/22/19	SHEET NO.	PLANT	ORDER NO.
SHOP	CHECKED DP 07/10/19	149	3	317023A-37

LINE	SHIP MARK	NO. OF PCS.	ASS'Y MARK	MATERIAL SHAPE	LENGTH FT.	LENGTH IN.	MATERIAL SPEC.	ITEM NO.	REMARKS
1	150CF1	ONE		PIER K-FRAME					1260
2		1	x108c	PL 1/2 x 11 1/2	3	8	A709-50WT2	1143	CVN 72
3		1	x108ag	L5 x 5 x 1/2	6	2 11/16	A709-50WT2	1139	CVN 101
4		1	x108an	L5 x 5 x 1/2	6	3 3/8	A709-50WT2	1139	CVN 102
5		1	x108bf	L5 x 5 x 1/2	14	8 1/4	A709-50WT2	1137	CVN 238
6		1	x108bw	L8 x 8 x 3/4	14	8 1/4	A709-50WT2	1135	CVN 571
7		1	x109m	PL 1/2 x 7 1/2	1	3	A709-50WT2	1141	CVN BENT 16
8		1	x109n	PL 1/2 x 7 1/2	1	3	A709-50WT2	1141	CVN BENT 16
9		1	x110f	PL 1/2 x 20	2	1 1/2	A709-50WT2	1142	CVN BENT 72
10		1	x110g	PL 1/2 x 20	2	1 1/2	A709-50WT2	1142	CVN BENT 72

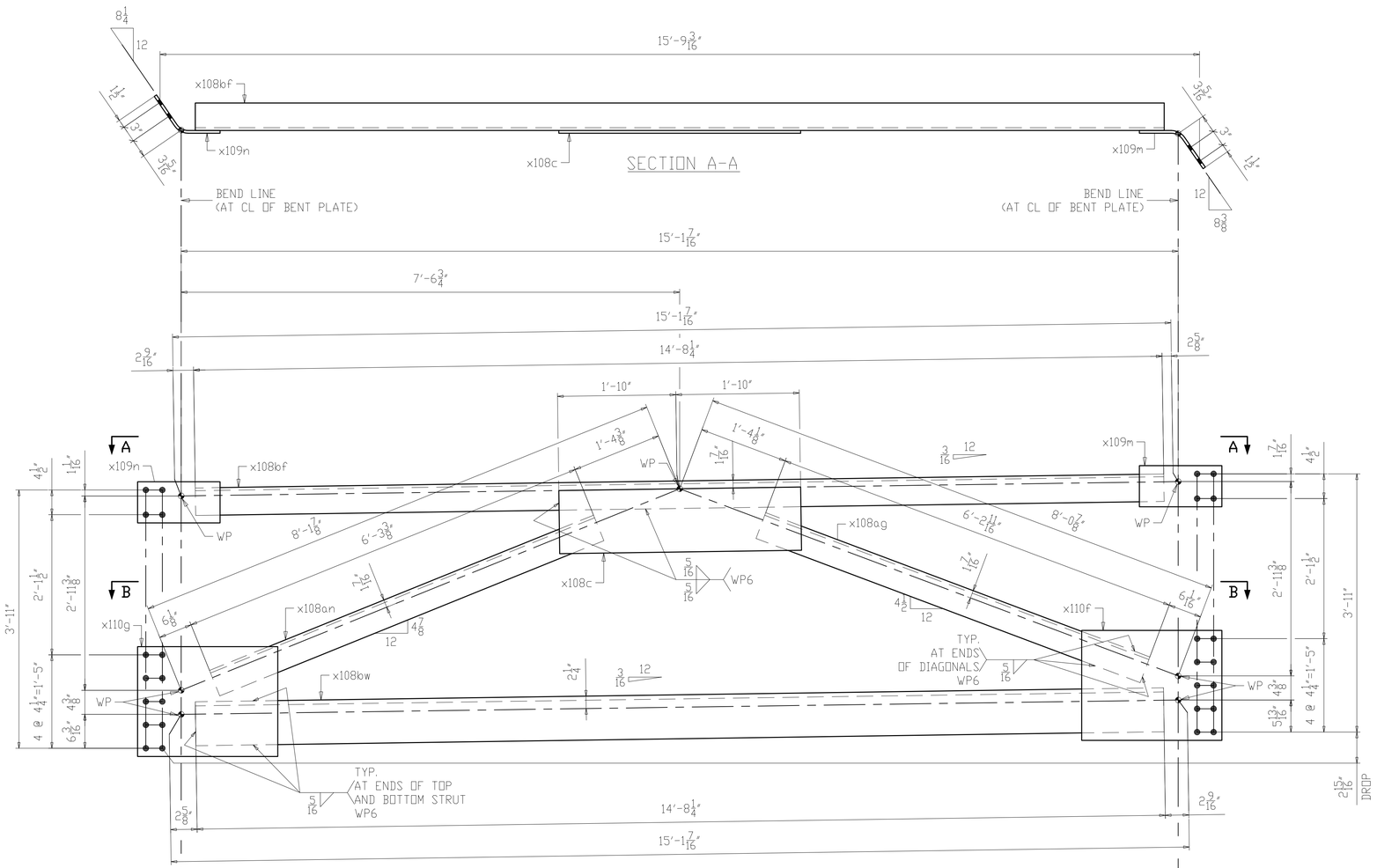

ONE ~ PIER K-FRAME ~ 150CF1
(PIER 2)

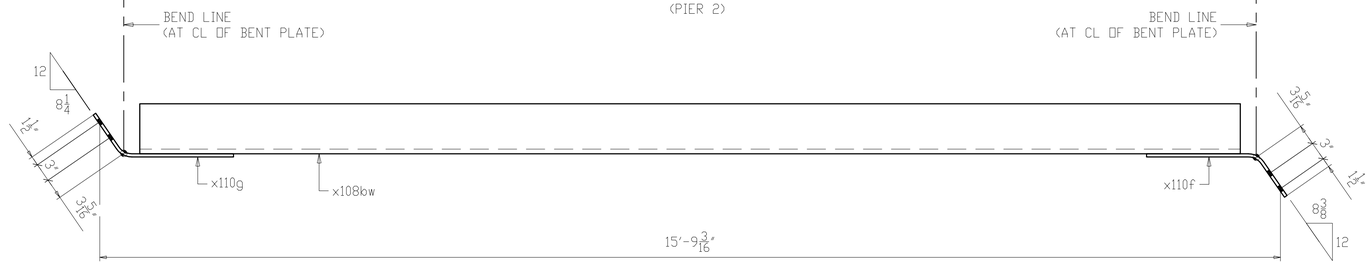

SECTION B-B

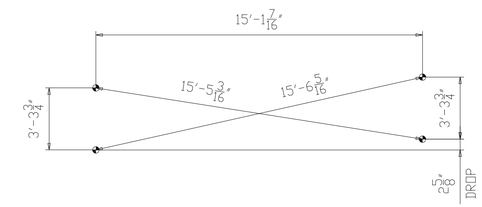

CROSS-CHECK DIAGRAM
(DIMENSIONS ARE GIVEN TO THE OUTERMOST WORKING POINTS)

NOTES:
1. FOR GENERAL NOTES SEE SHEET GN101.
2. ALL MATERIAL A709-50WT2 (UN).
3. T2 - DENOTES MATERIAL SUBJECT TO CHARPY V-NOTCH TESTING.
4. FOR K-FRAME STANDARD DETAILS SEE X108, X109 & X110.

NO.	DATE	REMARKS	BY

REVISIONS

Veritas STEEL
2-EAU CLAIRE, WI 3-WAUSAU, WI 4-PALATKA, FL
IENCA 1605

STRUCTURE: CUY-010-1978R, OH-10 EASTBOUND OVER GCRTA BLUE AND GREEN LINES
LOCATION: CLEVELAND, OHIO CUYAHOGA COUNTY
PROJECT NO. 17-3000
ENGINEER: MICHAEL BAKER INTERNATIONAL
CONTRACTOR: KOKOSING

ITEM: PIER 2 K-FRAME
SURFACE PREP. SEE P101 OPEN HOLES 1 1/16"Ø (U.N.O.)
PAINT SEE P101

APPROVAL	DRAWN AM 05/22/19	SHEET NO.	PLANT	ORDER NO.
SHOP	CHECKED DP 07/10/19	150	3	317023A-37

LINE	SHIP MARK	NO. OF PCS.	ASS'Y MARK	MATERIAL SHAPE	LENGTH FT.	LENGTH IN.	MATERIAL SPEC.	ITEM NO.	REMARKS
1	151CF1	9		INTERMEDIATE K-FRAME					6125
2		18	x111a	PL 1/2 x 7	1	0 1/2	A709-50WT2	1147	CVN 223
3		18	x111b	PL 1/2 x 18	1	6 1/4	A709-50WT2	1148	CVN 838
4		9	x111c	PL 1/2 x 10 1/4	2	2	A709-50WT2	1149	CVN 340
5		9	x111f	L4 x 4 x 1/2	4	5 3/16	A709-50WT2	1146	CVN 511
6		9	x111af	L4 x 4 x 1/2	4	6 1/4	A709-50WT2	1146	CVN 521
7		9	x111ak	L4 x 4 x 1/2	8	11 5/16	A709-50WT2	1145	CVN 1030
8		9	x111an	L6 x 6 x 7/8	8	11 1/4	A709-50WT2	1144	CVN 2662

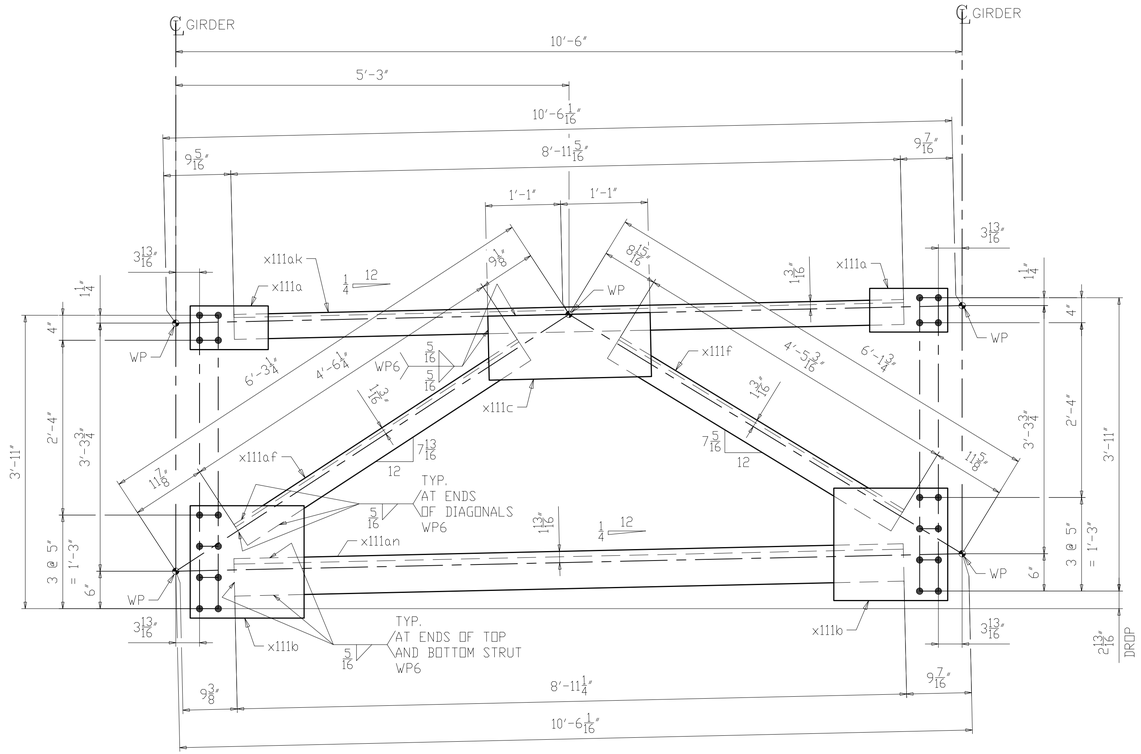

9 ~ INTERMEDIATE K-FRAME ~ 151CF1

(SPAN 1, 2 & 3)

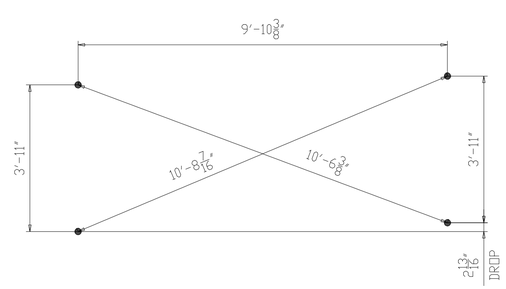

CROSS-CHECK DIAGRAM

(DIMENSIONS ARE GIVEN TO THE OUTERMOST HOLES)

NOTES:

1. FOR GENERAL NOTES SEE SHEET GN101.
2. ALL MATERIAL A709-50WT2 (UN).
3. T2 - DENOTES MATERIAL SUBJECT TO CHARPY V-NOTCH TESTING.
4. FOR K-FRAME STANDARD DETAILS SEE X111.

NO.	DATE	REMARKS	BY

REVISIONS

Veritas STEEL

2-EAU CLAIRE, WI 3-WAUSAU, WI 4-PALATKA, FL

TENCA 1605

STRUCTURE: CUY-010-1978R, OH-10 EASTBOUND OVER GCRTA BLUE AND GREEN LINES

LOCATION: CLEVELAND, OHIO CUYAHOGA COUNTY

PROJECT NO.: 17-3000

ENGINEER: MICHAEL BAKER INTERNATIONAL

CONTRACTOR: KOKOSING

ITEM: INTERMEDIATE K-FRAME

SURFACE PREP.: SEE P101 OPEN HOLES: 1 1/16"Ø (U.N.O.)

PAINT: SEE P101

APPROVAL	DRAWN AM 05/31/19	SHEET NO.	PLANT	ORDER NO.
SHOP	CHECKED DP 07/10/19	151	3	317023A-37

LINE	SHIP MARK	NO. OF PCS.	ASS'Y MARK	MATERIAL SHAPE	LENGTH FT.	LENGTH IN.	MATERIAL SPEC.	ITEM NO.	REMARKS	
1	152CF1	3		INTERMEDIATE K-FRAME						2039
2		6	x111a	PL 1/2 x 7	1	0 1/2	A709-50WT2	1147	CVN	74
3		6	x111b	PL 1/2 x 18	1	6 1/4	A709-50WT2	1148	CVN	279
4		3	x111c	PL 1/2 x 10 1/4	2	2	A709-50WT2	1149	CVN	113
5		3	x111g	L4 x 4 x 1/2	4	5 1/4	A709-50WT2	1146	CVN	170
6		3	x111ad	L4 x 4 x 1/2	4	6 3/16	A709-50WT2	1146	CVN	173
7		3	x111ak	L4 x 4 x 1/2	8	11 5/16	A709-50WT2	1145	CVN	343
8		3	x111an	L6 x 6 x 7/8	8	11 1/4	A709-50WT2	1144	CVN	887

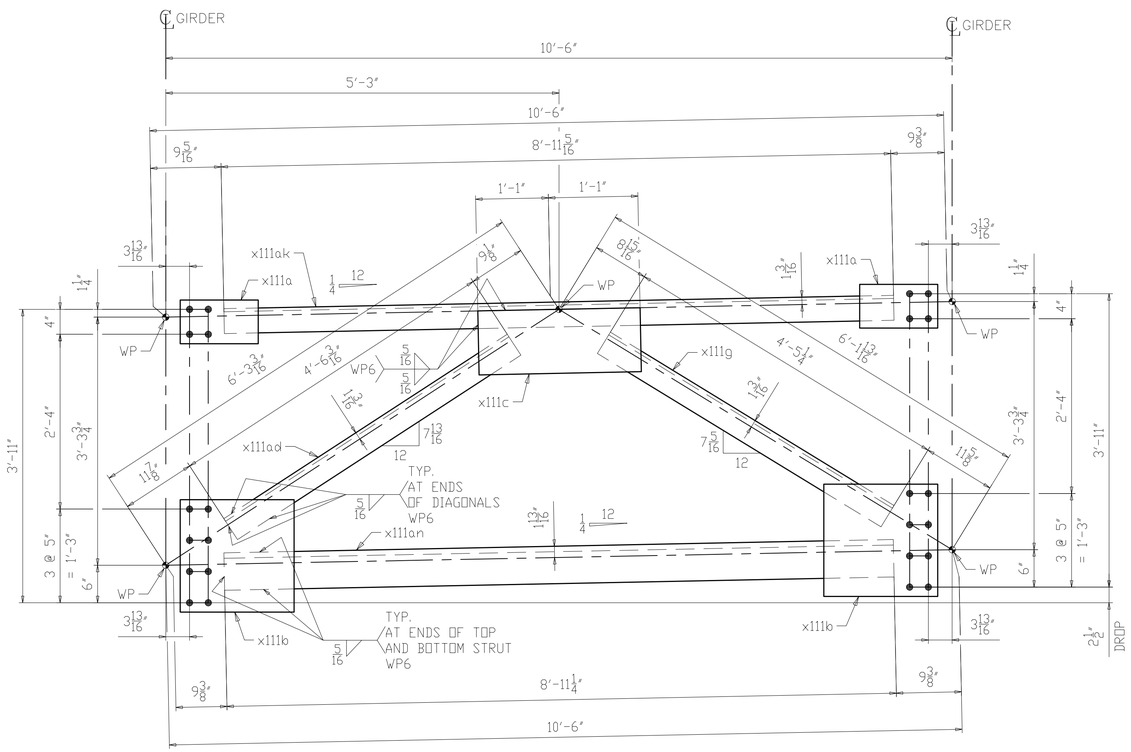

3 ~ INTERMEDIATE K-FRAME ~ 152CF1

(SPAN 1 & 2)

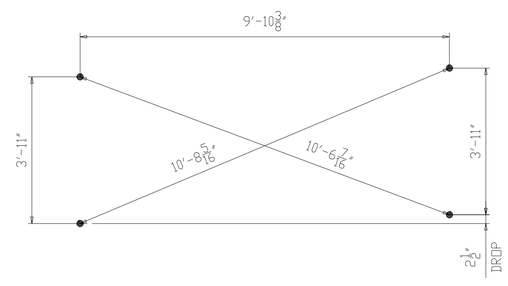

CROSS-CHECK DIAGRAM

(DIMENSIONS ARE GIVEN TO THE OUTERMOST HOLES)

NOTES:

1. FOR GENERAL NOTES SEE SHEET GN101.
2. ALL MATERIAL A709-50WT2 (UN).
3. T2 - DENOTES MATERIAL SUBJECT TO CHARPY V-NOTCH TESTING.
4. FOR K-FRAME STANDARD DETAILS SEE X111.

NO.	DATE	REMARKS	BY

REVISIONS

Veritas STEEL

2-EAU CLAIRE, WI 3-WAUSAU, WI 4-PALATKA, FL

TENCA 1605

STRUCTURE	CUY-010-1978R, OH-10 EASTBOUND OVER GCRTA BLUE AND GREEN LINES
LOCATION	CLEVELAND, OHIO CUYAHOGA COUNTY
PROJECT NO.	17-3000
ENGINEER	MICHAEL BAKER INTERNATIONAL
CONTRACTOR	KOKOSING
ITEM	INTERMEDIATE K-FRAME
SURFACE PREP.	SEE P101 OPEN HOLES 1 1/16"Ø (U.N.O.)
PAINT	SEE P101

APPROVAL	DRAWN AM 05/31/19	SHEET NO.	PLANT	ORDER NO.
SHOP	CHECKED DP 07/10/19	152	3	317023A-37

LINE	SHIP MARK	NO. OF PCS.	ASS'Y MARK	MATERIAL SHAPE	LENGTH FT.	LENGTH IN.	MATERIAL SPEC.	ITEM NO.	REMARKS	
1	153CF1	9		INTERMEDIATE K-FRAME						6127
2		18	x111a	PL 1/2 x 7	1	0 1/2	A709-50WT2	1147	CVN	223
3		18	x111b	PL 1/2 x 18	1	6 1/4	A709-50WT2	1148	CVN	838
4		9	x111c	PL 1/2 x 10 1/4	2	2	A709-50WT2	1149	CVN	340
5		9	x111k	L4 x 4 x 1/2	4	5 5/16	A709-50WT2	1146	CVN	512
6		9	x111ac	L4 x 4 x 1/2	4	6 1/8	A709-50WT2	1146	CVN	520
7		9	x111ak	L4 x 4 x 1/2	8	11 5/16	A709-50WT2	1145	CVN	1030
8		9	x111ap	L6 x 6 x 7/8	8	11 5/16	A709-50WT2	1144	CVN	2664

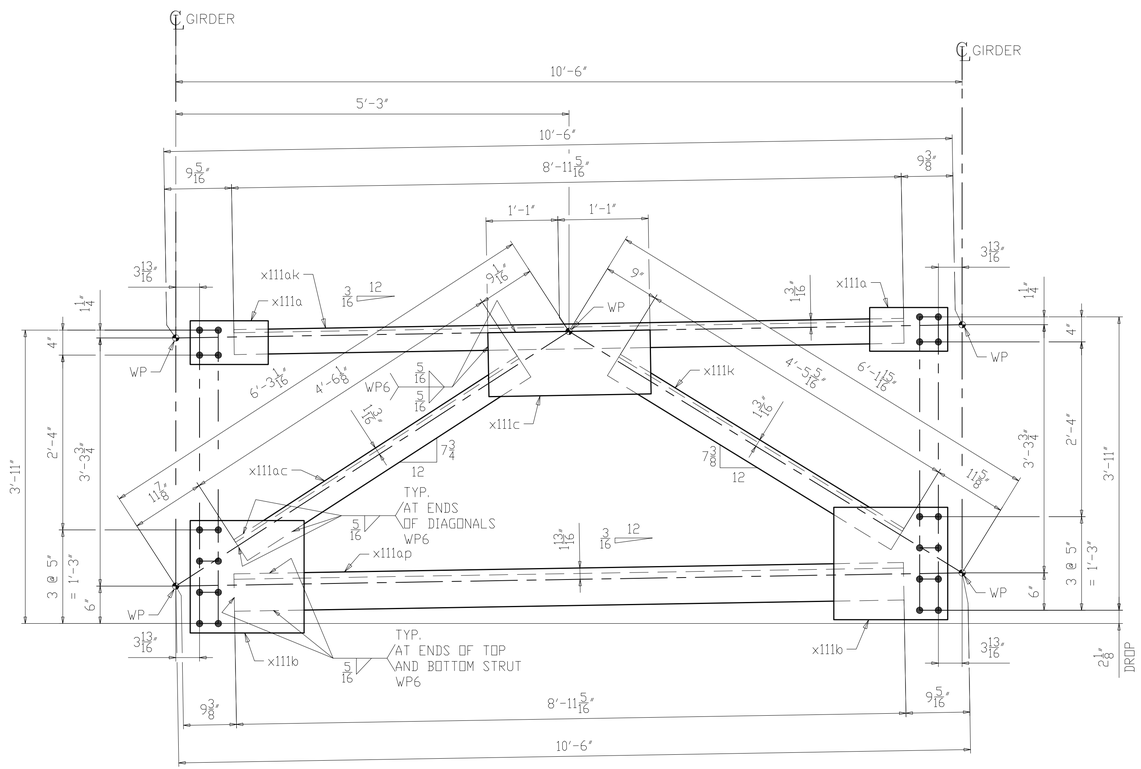

9 ~ INTERMEDIATE K-FRAME ~ 153CF1
(SPAN 1, 2 & 3)

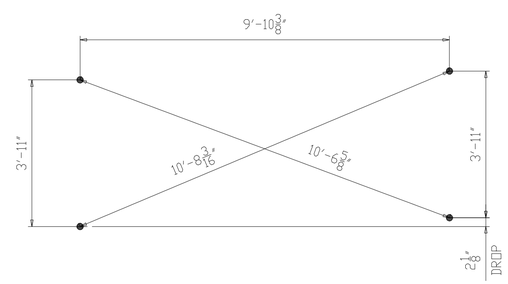

CROSS-CHECK DIAGRAM
(DIMENSIONS ARE GIVEN TO THE OUTERMOST HOLES)

NOTES:
1. FOR GENERAL NOTES SEE SHEET GN101.
2. ALL MATERIAL A709-50WT2 (UN).
3. T2 - DENOTES MATERIAL SUBJECT TO CHARPY V-NOTCH TESTING.
4. FOR K-FRAME STANDARD DETAILS SEE X111.

NO.	DATE	REMARKS	BY
△			

REVISIONS

Veritas STEEL
2-EAU CLAIRE, WI 3-WAUSAU, WI 4-PALATKA, FL
IENCA 1605

STRUCTURE	CUY-010-1978R, OH-10 EASTBOUND OVER GCRTA BLUE AND GREEN LINES
LOCATION	CLEVELAND, OHIO CUYAHOGA COUNTY
PROJECT NO.	17-3000
ENGINEER	MICHAEL BAKER INTERNATIONAL
CONTRACTOR	KOKOSING
ITEM	INTERMEDIATE K-FRAME
SURFACE PREP.	SEE P101
OPEN HOLES	1 1/16"Ø (U.N.O.)
PAINT	SEE P101

APPROVAL	DRAWN AM 05/31/19	SHEET NO.	PLANT	ORDER NO.
SHOP	CHECKED DP 07/10/19	153	3	317023A-37

LINE	SHIP MARK	NO. OF PCS.	ASS'Y MARK	MATERIAL SHAPE	LENGTH FT.	LENGTH IN.	MATERIAL SPEC.	ITEM NO.	REMARKS	
1	154CF1	7		INTERMEDIATE K-FRAME						4765
2		14	x111a	PL 1/2 x 7	1	0 1/2	A709-50WT2	1147	CVN	174
3		14	x111b	PL 1/2 x 18	1	6 1/4	A709-50WT2	1148	CVN	652
4		7	x111c	PL 1/2 x 10 1/4	2	2	A709-50WT2	1149	CVN	264
5		7	x111d	L4 x 4 x 1/2	4	5 1/8	A709-50WT2	1146	CVN	397
6		7	x111ag	L4 x 4 x 1/2	4	6 5/16	A709-50WT2	1146	CVN	406
7		7	x111ak	L4 x 4 x 1/2	8	11 5/16	A709-50WT2	1145	CVN	801
8		7	x111an	L6 x 6 x 7/8	8	11 1/4	A709-50WT2	1144	CVN	2071

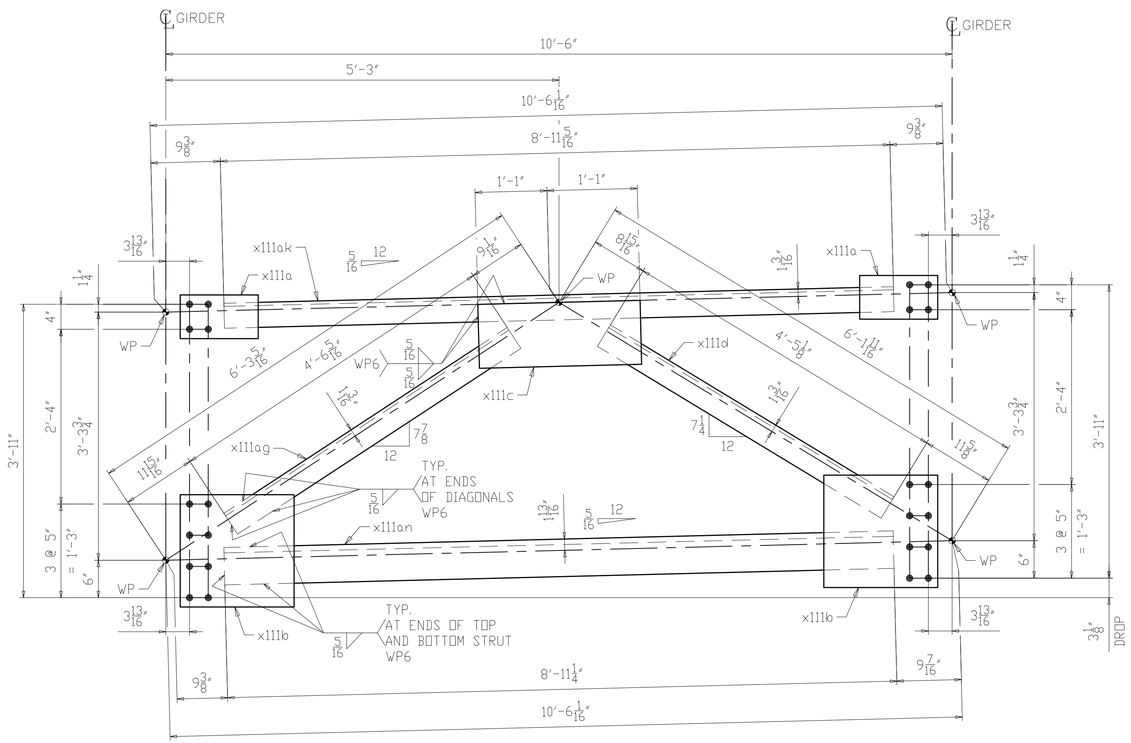

7 ~ INTERMEDIATE K-FRAME ~ 154CF1

(SPAN 2 & 3)

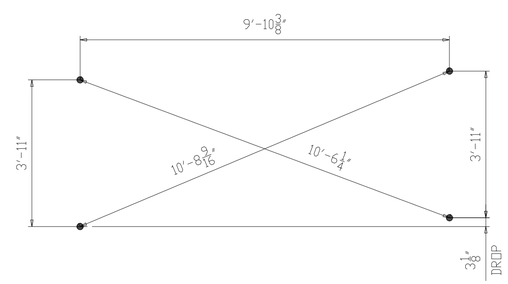

CROSS-CHECK DIAGRAM

(DIMENSIONS ARE GIVEN TO THE OUTERMOST HOLES)

NOTES:

1. FOR GENERAL NOTES SEE SHEET GN101.
2. ALL MATERIAL A709-50WT2 (UN).
3. T2 - DENOTES MATERIAL SUBJECT TO CHARPY V-NOTCH TESTING.
4. FOR K-FRAME STANDARD DETAILS SEE X111.

NO.	DATE	REMARKS	BY

REVISIONS

Veritas STEEL

2-EAU CLAIRE, WI 3-WAUSAU, WI 4-PALATKA, FL

TENCA 1605

STRUCTURE	CUY-010-1978R, OH-10 EASTBOUND OVER GCRTA BLUE AND GREEN LINES
LOCATION	CLEVELAND, OHIO CUYAHOGA COUNTY
PROJECT NO.	17-3000
ENGINEER	MICHAEL BAKER INTERNATIONAL
CONTRACTOR	KOKOSING
ITEM	INTERMEDIATE K-FRAME
SURFACE PREP.	SEE P101 OPEN HOLES 1 1/16"Ø (U.N.O.)
PAINT	SEE P101

APPROVAL	DRAWN AM 05/31/19	SHEET NO.	PLANT	ORDER NO.
SHOP	CHECKED DP 07/10/19	154	3	317023A-37

LINE	SHIP MARK	NO. OF PCS.	ASS'Y MARK	MATERIAL SHAPE	LENGTH FT.	LENGTH IN.	MATERIAL SPEC.	ITEM NO.	REMARKS
1	155CF1	ONE		INTERMEDIATE K-FRAME					681
2		2	x111a	PL 1/2 x 7	1	0 1/2	A709-50WT2	1147	CVN 25
3		2	x111b	PL 1/2 x 18	1	6 1/4	A709-50WT2	1148	CVN 93
4		1	x111c	PL 1/2 x 10 1/4	2	2	A709-50WT2	1149	CVN 38
5		1	x111m	L4 x 4 x 1/2	4	5 3/8	A709-50WT2	1146	CVN 57
6		1	x111ab	L4 x 4 x 1/2	4	6	A709-50WT2	1146	CVN 58
7		1	x111ak	L4 x 4 x 1/2	8	11 5/16	A709-50WT2	1145	CVN 114
8		1	x111ap	L6 x 6 x 7/8	8	11 5/16	A709-50WT2	1144	CVN 296

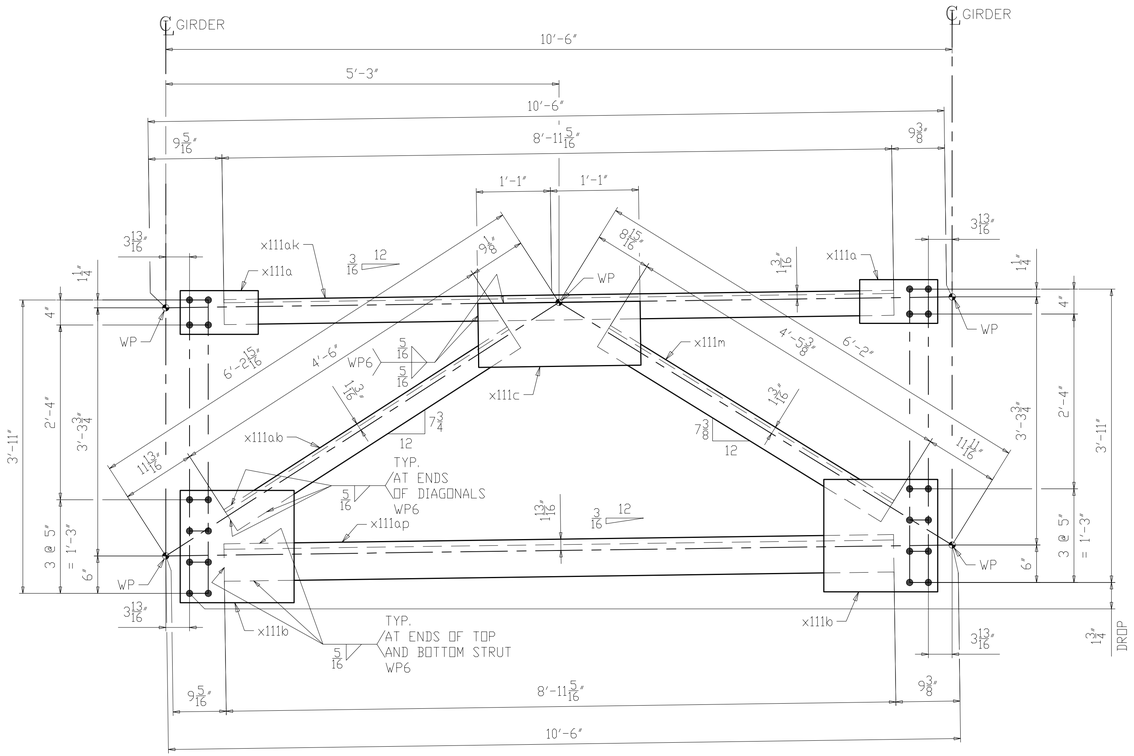

ONE ~ INTERMEDIATE K-FRAME ~ 155CF1

(SPAN 1)

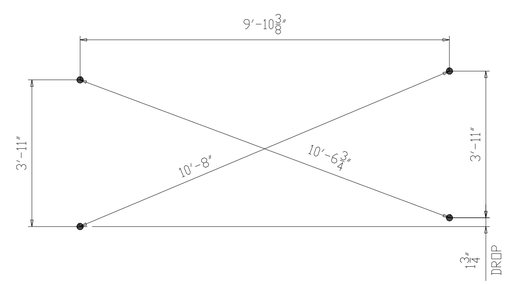

CROSS-CHECK DIAGRAM

(DIMENSIONS ARE GIVEN TO THE OUTERMOST HOLES)

NOTES:

1. FOR GENERAL NOTES SEE SHEET GN101.
2. ALL MATERIAL A709-50WT2 (UN).
3. T2 - DENOTES MATERIAL SUBJECT TO CHARPY V-NOTCH TESTING.
4. FOR K-FRAME STANDARD DETAILS SEE X111.

NO.	DATE	REMARKS	BY
△			

REVISIONS

Veritas STEEL

2-EAU CLAIRE, WI 3-WAUSAU, WI 4-PALATKA, FL

IENCA 1605

STRUCTURE: CUY-010-1978R, OH-10 EASTBOUND OVER GCRTA BLUE AND GREEN LINES

LOCATION: CLEVELAND, OHIO CUYAHOGA COUNTY

PROJECT NO. 17-3000

ENGINEER: MICHAEL BAKER INTERNATIONAL

CONTRACTOR: KOKOSING

ITEM: INTERMEDIATE K-FRAME

SURFACE PREP. SEE P101 OPEN HOLES $1\frac{1}{16}$"Ø (U.N.O.)

PAINT: SEE P101

APPROVAL	DRAWN AM 05/31/19	SHEET NO.	PLANT	ORDER NO.
SHOP	CHECKED DP 07/10/19	155	3	317023A-37

LINE	SHIP MARK	NO. OF PCS.	ASS'Y MARK	MATERIAL SHAPE	LENGTH FT.	LENGTH IN.	MATERIAL SPEC.	ITEM NO.	REMARKS	
1	156CF1	3		INTERMEDIATE K-FRAME						2039
2		6	x111a	PL 1/2 x 7	1	0 1/2	A709-50WT2	1147	CVN	74
3		6	x111b	PL 1/2 x 18	1	6 1/4	A709-50WT2	1148	CVN	279
4		3	x111c	PL 1/2 x 10 1/4	2	2	A709-50WT2	1149	CVN	113
5		3	x111g	L4 x 4 x 1/2	4	5 1/4	A709-50WT2	1146	CVN	170
6		3	x111ad	L4 x 4 x 1/2	4	6 3/16	A709-50WT2	1146	CVN	173
7		3	x111ak	L4 x 4 x 1/2	8	11 5/16	A709-50WT2	1145	CVN	343
8		3	x111av	L6 x 6 x 7/8	8	11 1/4	A709-50WT2	1144	CVN	887

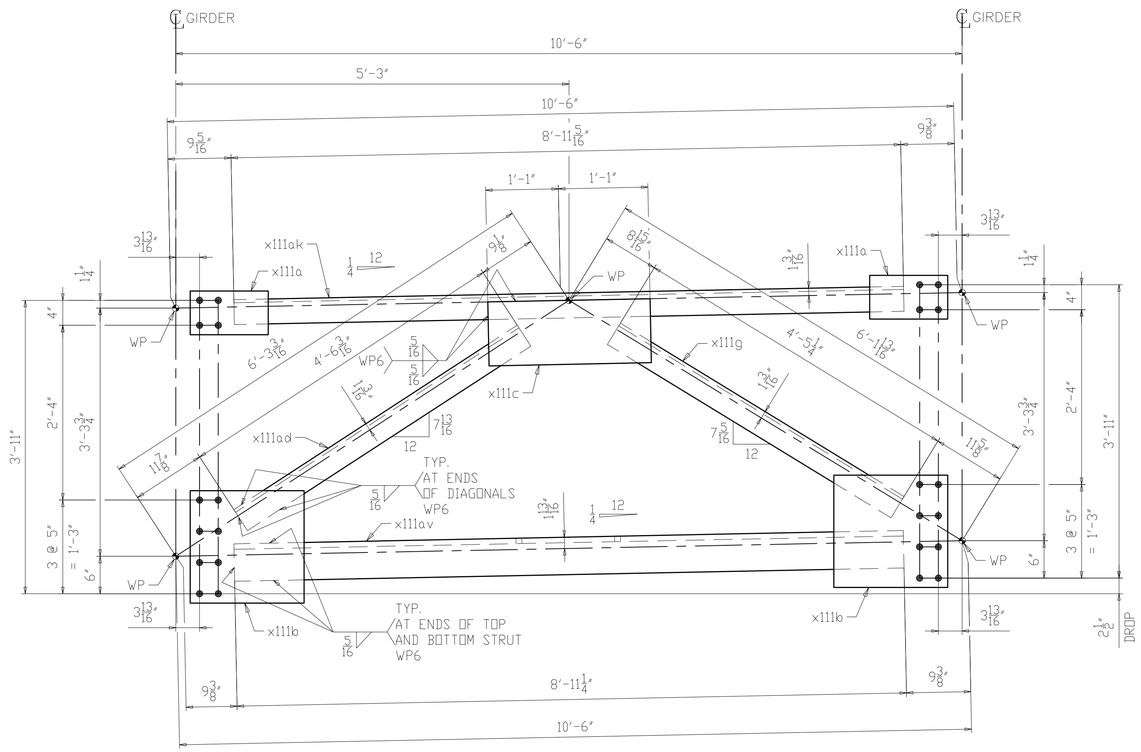

3 ~ INTERMEDIATE K-FRAME ~ 156CF1

(SPAN 1, 2 & 3)

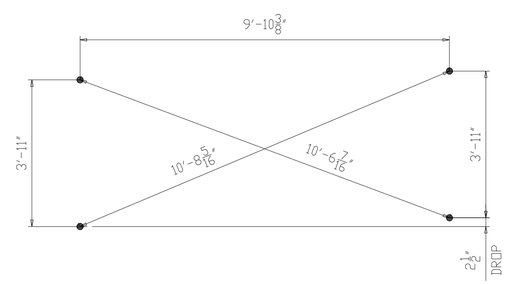

CROSS-CHECK DIAGRAM

(DIMENSIONS ARE GIVEN TO THE OUTERMOST HOLES)

NOTES:

1. FOR GENERAL NOTES SEE SHEET GN101.
2. ALL MATERIAL A709-50WT2 (UN).
3. T2 - DENOTES MATERIAL SUBJECT TO CHARPY V-NOTCH TESTING.
4. FOR K-FRAME STANDARD DETAILS SEE X111.

NO.	DATE	REMARKS	BY

REVISIONS

Veritas STEEL

2-EAU CLAIRE, WI 3-WAUSAU, WI 4-PALATKA, FL

IAS 1605

STRUCTURE	CUY-010-1978R, OH-10 EASTBOUND OVER GCRTA BLUE AND GREEN LINES
LOCATION	CLEVELAND, OHIO CUYAHOGA COUNTY
PROJECT NO.	17-3000
ENGINEER	MICHAEL BAKER INTERNATIONAL
CONTRACTOR	KOKOSING
ITEM	INTERMEDIATE K-FRAME
SURFACE PREP.	SEE P101 OPEN HOLES 1 1/16"Ø (U.N.O.)
PAINT	SEE P101

APPROVAL	DRAWN AM 05/31/19	SHEET NO.	PLANT	ORDER NO.
SHOP	CHECKED DP 07/10/19	156	3	317023A-37

LINE	SHIP MARK	NO. OF PCS.	ASS'Y MARK	MATERIAL SHAPE	LENGTH FT.	LENGTH IN.	MATERIAL SPEC.	ITEM NO.	REMARKS	
1	157CF1	3		INTERMEDIATE K-FRAME						2041
2		6	x111a	PL 1/2 x 7	1	0 1/2	A709-50WT2	1147	CVN	74
3		6	x111b	PL 1/2 x 18	1	6 1/4	A709-50WT2	1148	CVN	279
4		3	x111c	PL 1/2 x 10 1/4	2	2	A709-50WT2	1149	CVN	113
5		3	x111m	L4 x 4 x 1/2	4	5 3/8	A709-50WT2	1146	CVN	171
6		3	x111ab	L4 x 4 x 1/2	4	6	A709-50WT2	1146	CVN	173
7		3	x111ak	L4 x 4 x 1/2	8	11 5/16	A709-50WT2	1145	CVN	343
8		3	x111aw	L6 x 6 x 7/8	8	11 5/16	A709-50WT2	1144	CVN	888

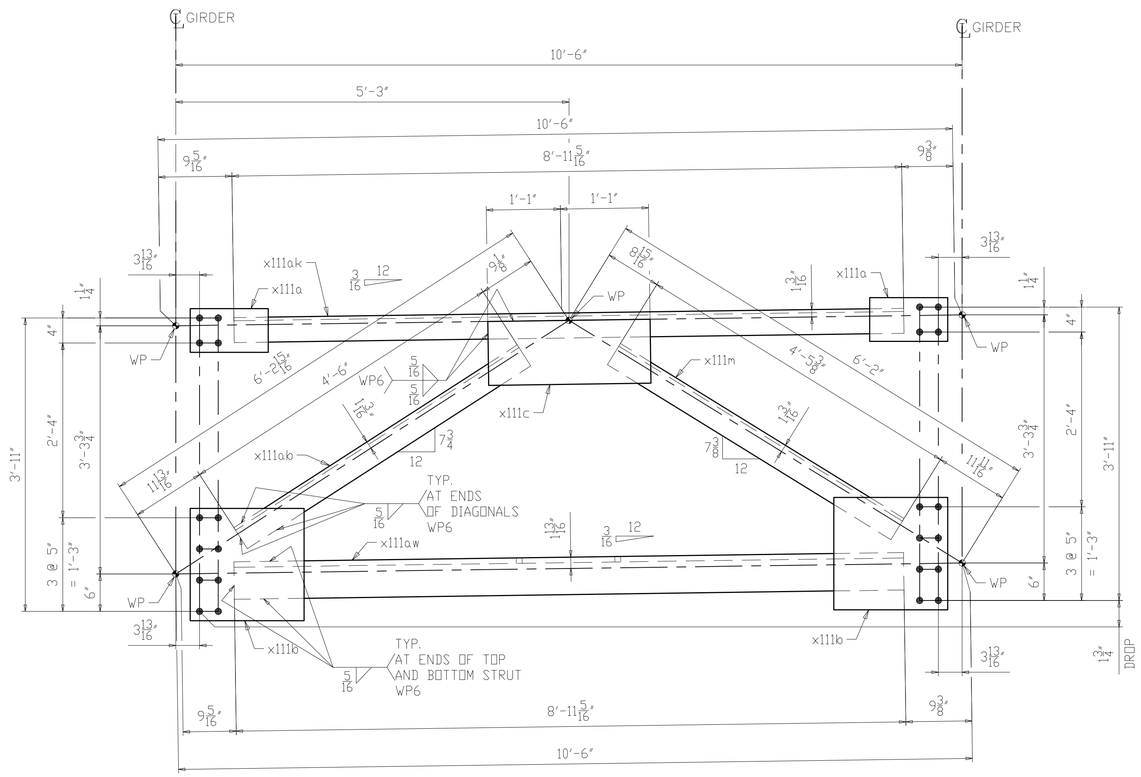

3 ~ INTERMEDIATE K-FRAME ~ 157CF1

(SPAN 1)

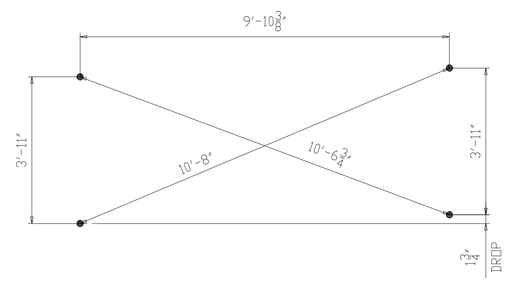

CROSS-CHECK DIAGRAM

(DIMENSIONS ARE GIVEN TO THE OUTERMOST HOLES)

NOTES:

1. FOR GENERAL NOTES SEE SHEET GN101.
2. ALL MATERIAL A709-50WT2 (UN).
3. T2 - DENOTES MATERIAL SUBJECT TO CHARPY V-NOTCH TESTING.
4. FOR K-FRAME STANDARD DETAILS SEE X111.

NO.	DATE	REMARKS	BY

REVISIONS

Veritas STEEL

2-EAU CLAIRE, WI 3-WAUSAU, WI 4-PALATKA, FL

IAS 1605

STRUCTURE	CUY-010-1978R, OH-10 EASTBOUND OVER GCRTA BLUE AND GREEN LINES
LOCATION	CLEVELAND, OHIO CUYAHOGA COUNTY
PROJECT NO.	17-3000
ENGINEER	MICHAEL BAKER INTERNATIONAL
CONTRACTOR	KOKOSING
ITEM	INTERMEDIATE K-FRAME
SURFACE PREP.	SEE P101 OPEN HOLES 1 1/16"Ø (U.N.O.)
PAINT	SEE P101

APPROVAL	DRAWN AM 05/31/19	SHEET NO.	PLANT	ORDER NO.
SHOP	CHECKED DP 07/10/19	157	3	317023A-37

LINE	SHIP MARK	NO. OF PCS.	ASS'Y MARK	MATERIAL SHAPE	LENGTH FT.	LENGTH IN.	MATERIAL SPEC.	ITEM NO.	REMARKS	
1	158CF1	4		INTERMEDIATE K-FRAME						2721
2		8	x111a	PL 1/2 x 7	1	0 1/2	A709-50WT2	1147	CVN	99
3		8	x111b	PL 1/2 x 18	1	6 1/4	A709-50WT2	1148	CVN	372
4		4	x111c	PL 1/2 x 10 1/4	2	2	A709-50WT2	1149	CVN	151
5		4	x111f	L4 x 4 x 1/2	4	5 3/16	A709-50WT2	1146	CVN	227
6		4	x111af	L4 x 4 x 1/2	4	6 1/4	A709-50WT2	1146	CVN	231
7		4	x111ak	L4 x 4 x 1/2	8	11 5/16	A709-50WT2	1145	CVN	458
8		4	x111av	L6 x 6 x 7/8	8	11 1/4	A709-50WT2	1144	CVN	1183

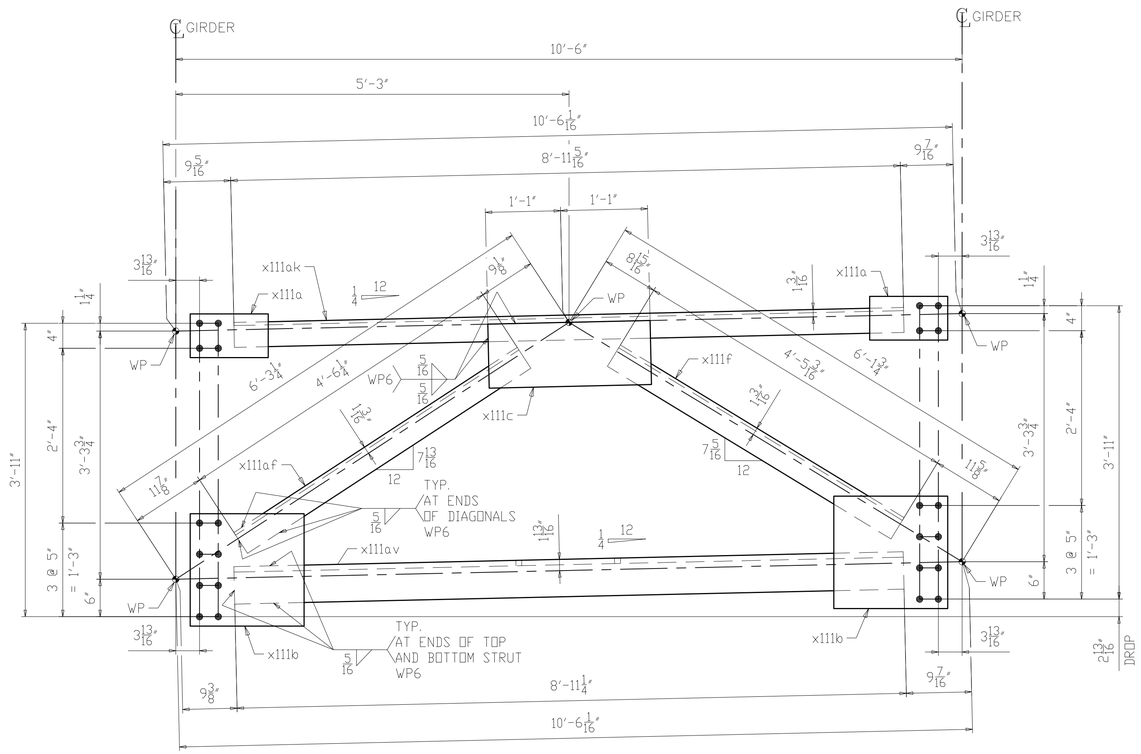

4 ~ INTERMEDIATE K-FRAME ~ 158CF1

(SPAN 2 & 3)

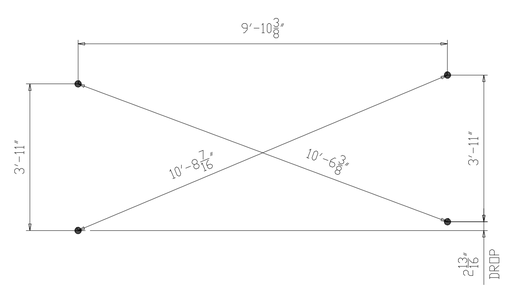

CROSS-CHECK DIAGRAM

(DIMENSIONS ARE GIVEN TO THE OUTERMOST HOLES)

NOTES:

1. FOR GENERAL NOTES SEE SHEET GN101.
2. ALL MATERIAL A709-50WT2 (UN).
3. T2 - DENOTES MATERIAL SUBJECT TO CHARPY V-NOTCH TESTING.
4. FOR K-FRAME STANDARD DETAILS SEE X111.

NO.	DATE	REMARKS	BY
△			

REVISIONS

Veritas STEEL

2-EAU CLAIRE, WI 3-WAUSAU, WI 4-PALATKA, FL

TENCA 1605

STRUCTURE	CUY-010-1978R, OH-10 EASTBOUND OVER GCRTA BLUE AND GREEN LINES
LOCATION	CLEVELAND, OHIO CUYAHOGA COUNTY
PROJECT NO.	17-3000
ENGINEER	MICHAEL BAKER INTERNATIONAL
CONTRACTOR	KOKOSING
ITEM	INTERMEDIATE K-FRAME
SURFACE PREP.	SEE P101
OPEN HOLES	1 1/16"Ø (U.N.O.)
PAINT	SEE P101

APPROVAL	DRAWN AM 05/31/19	SHEET NO.	PLANT	ORDER NO.
SHOP	CHECKED DP 07/10/19	158	3	317023A-37

LINE	SHIP MARK	NO. OF PCS.	ASS'Y MARK	MATERIAL SHAPE	LENGTH FT.	LENGTH IN.	MATERIAL SPEC.	ITEM NO.	REMARKS	
1	159CF1	3		INTERMEDIATE K-FRAME						2041
2		6	x111a	PL 1/2 x 7	1	0 1/2	A709-50WT2	1147	CVN	74
3		6	x111b	PL 1/2 x 18	1	6 1/4	A709-50WT2	1148	CVN	279
4		3	x111c	PL 1/2 x 10 1/4	2	2	A709-50WT2	1149	CVN	113
5		3	x111k	L4 x 4 x 1/2	4	5 5/16	A709-50WT2	1146	CVN	171
6		3	x111ac	L4 x 4 x 1/2	4	6 1/8	A709-50WT2	1146	CVN	173
7		3	x111ak	L4 x 4 x 1/2	8	11 5/16	A709-50WT2	1145	CVN	343
8		3	x111aw	L6 x 6 x 7/8	8	11 5/16	A709-50WT2	1144	CVN	888

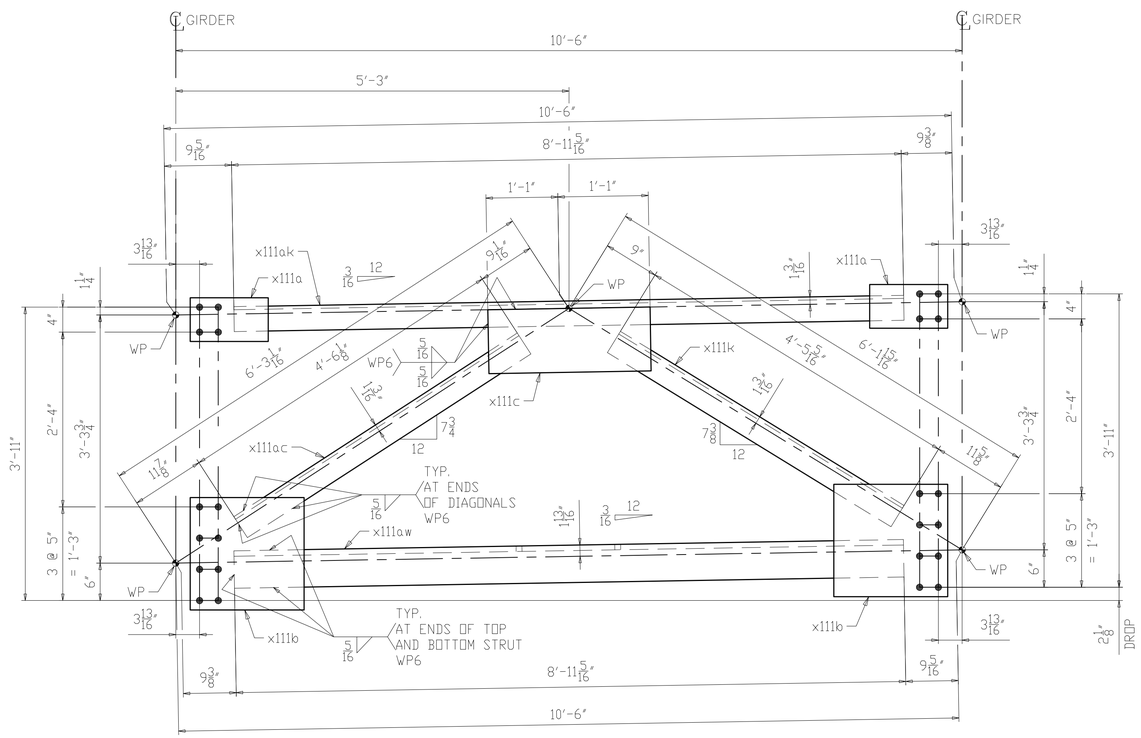

3 ~ INTERMEDIATE K-FRAME ~ 159CF1

(SPAN 2 & 3)

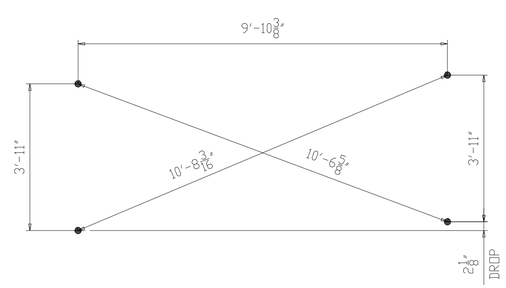

CROSS-CHECK DIAGRAM

(DIMENSIONS ARE GIVEN TO THE OUTERMOST HOLES)

NOTES:

1. FOR GENERAL NOTES SEE SHEET GN101.
2. ALL MATERIAL A709-50WT2 (UN).
3. T2 - DENOTES MATERIAL SUBJECT TO CHARPY V-NOTCH TESTING.
4. FOR K-FRAME STANDARD DETAILS SEE X111.

NO.	DATE	REMARKS	BY

REVISIONS

Veritas STEEL

2-EAU CLAIRE, WI 3-WAUSAU, WI 4-PALATKA, FL

TENCA 1605

STRUCTURE	CUY-010-1978R, OH-10 EASTBOUND OVER GCRTA BLUE AND GREEN LINES
LOCATION	CLEVELAND, OHIO CUYAHOGA COUNTY
PROJECT NO.	17-3000
ENGINEER	MICHAEL BAKER INTERNATIONAL
CONTRACTOR	KOKOSING
ITEM	INTERMEDIATE K-FRAME
SURFACE PREP.	SEE P101
OPEN HOLES	1 1/16"Ø (U.N.O.)
PAINT	SEE P101

APPROVAL	DRAWN AM 05/31/19	SHEET NO.	PLANT	ORDER NO.
SHOP	CHECKED DP 07/10/19	159	3	317023A-37

LINE	SHIP MARK	NO. OF PCS.	ASS'Y MARK	MATERIAL SHAPE	LENGTH FT.	LENGTH IN.	MATERIAL SPEC.	ITEM NO.	REMARKS	
1	160CF1	4		INTERMEDIATE K-FRAME						2723
2		8	x111a	PL 1/2 x 7	1	0 1/2	A709-50WT2	1147	CVN	99
3		8	x111b	PL 1/2 x 18	1	6 1/4	A709-50WT2	1148	CVN	372
4		4	x111c	PL 1/2 x 10 1/4	2	2	A709-50WT2	1149	CVN	151
5		4	x111p	L4 x 4 x 1/2	4	5 9/16	A709-50WT2	1146	CVN	229
6		4	x111y	L4 x 4 x 1/2	4	5 7/8	A709-50WT2	1146	CVN	230
7		4	x111am	L4 x 4 x 1/2	8	11 3/8	A709-50WT2	1145	CVN	458
8		4	x111ay	L6 x 6 x 7/8	8	11 5/16	A709-50WT2	1144	CVN	1184

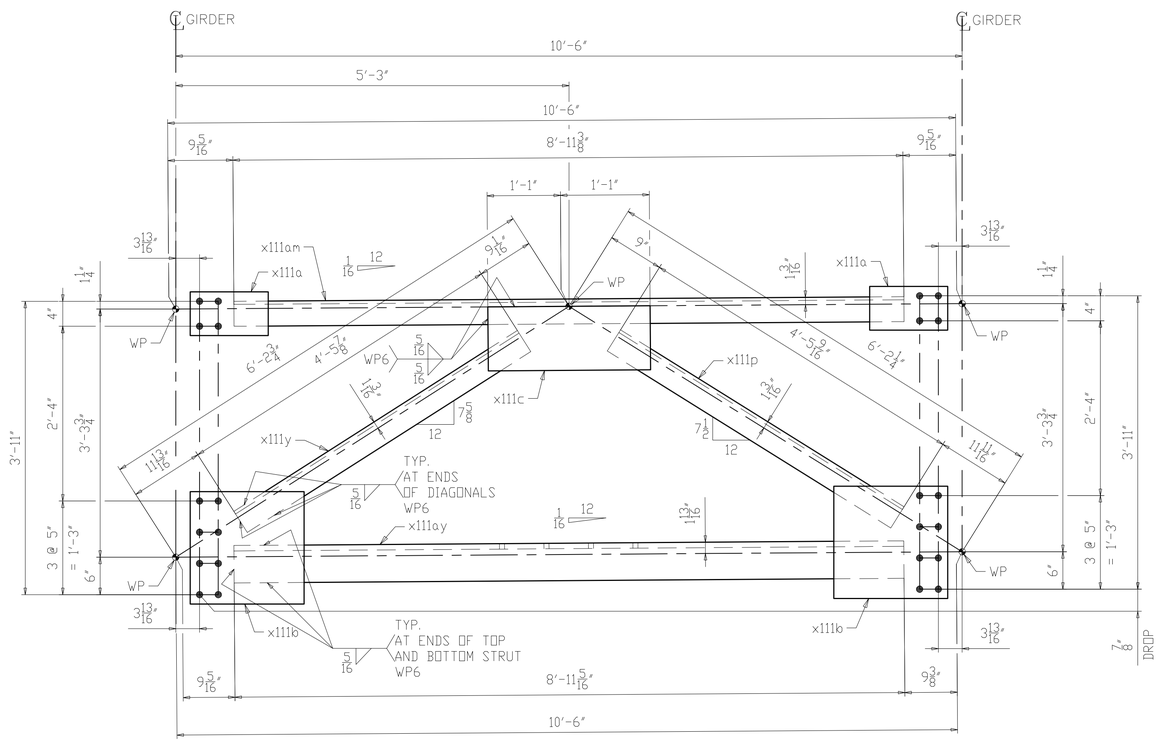

4 ~ INTERMEDIATE K-FRAME ~ 160CF1

(SPAN 1, 2 & 3)

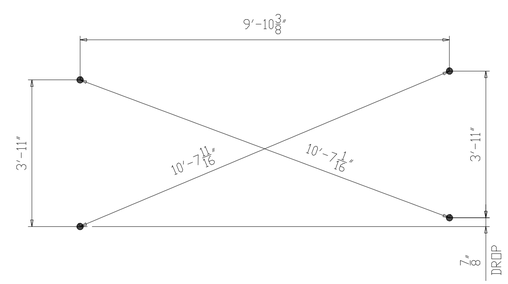

CROSS-CHECK DIAGRAM

(DIMENSIONS ARE GIVEN TO THE OUTERMOST HOLES)

NOTES:

1. FOR GENERAL NOTES SEE SHEET GN101.
2. ALL MATERIAL A709-50WT2 (UN).
3. T2 - DENOTES MATERIAL SUBJECT TO CHARPY V-NOTCH TESTING.
4. FOR K-FRAME STANDARD DETAILS SEE X111.

NO.	DATE	REMARKS	BY
△			

REVISIONS

Veritas STEEL

2-EAU CLAIRE, WI 3-WAUSAU, WI 4-PALATKA, FL

IENCA 1605

STRUCTURE	CUY-010-1978R, OH-10 EASTBOUND OVER GCRTA BLUE AND GREEN LINES
LOCATION	CLEVELAND, OHIO CUYAHOGA COUNTY
PROJECT NO.	17-3000
ENGINEER	MICHAEL BAKER INTERNATIONAL
CONTRACTOR	KOKOSING
ITEM	INTERMEDIATE K-FRAME
SURFACE PREP.	SEE P101
OPEN HOLES	1 1/16"Ø (U.N.O.)
PAINT	SEE P101

APPROVAL	DRAWN AM 05/31/19	SHEET NO.	PLANT	ORDER NO.
SHOP	CHECKED DP 07/10/19	160	3	317023A-37

LINE	SHIP MARK	NO. OF PCS.	ASS'Y MARK	MATERIAL SHAPE	LENGTH FT.	LENGTH IN.	MATERIAL SPEC.	ITEM NO.	REMARKS
1	161CF1	ONE		INTERMEDIATE K-FRAME					681
2		2	x111a	PL 1/2 x 7	1	0 1/2	A709-50WT2	1147	CVN 25
3		2	x111b	PL 1/2 x 18	1	6 1/4	A709-50WT2	1148	CVN 93
4		1	x111c	PL 1/2 x 10 1/4	2	2	A709-50WT2	1149	CVN 38
5		1	x111t	L4 x 4 x 1/2	4	5 5/8	A709-50WT2	1146	CVN 57
6		1	x111w	L4 x 4 x 1/2	4	5 3/4	A709-50WT2	1146	CVN 57
7		1	x111am	L4 x 4 x 1/2	8	11 3/8	A709-50WT2	1145	CVN 115
8		1	x111ba	L6 x 6 x 7/8	8	11 3/8	A709-50WT2	1144	CVN 296

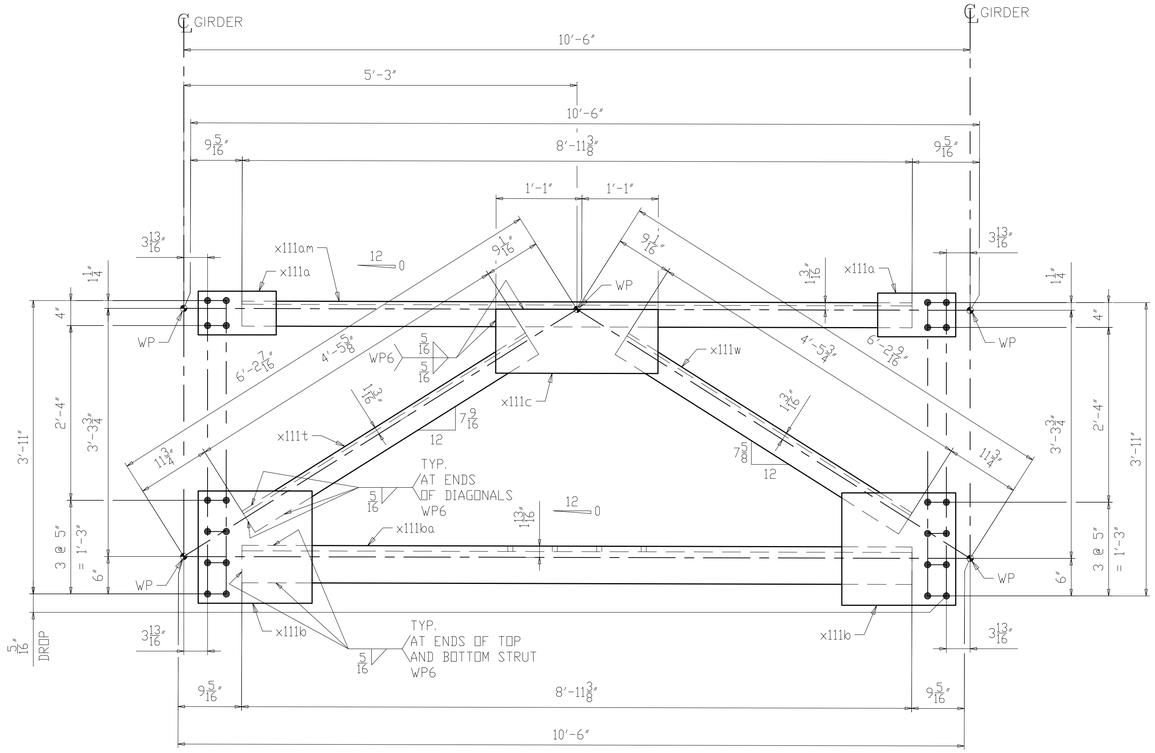

ONE ~ INTERMEDIATE K-FRAME ~ 161CF1

(SPAN 1)

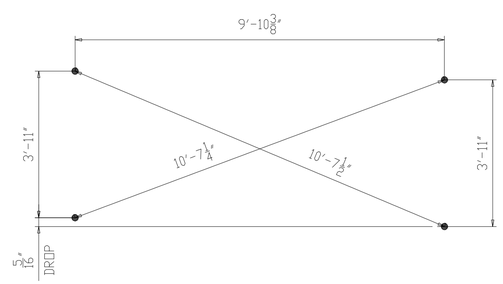

CROSS-CHECK DIAGRAM

(DIMENSIONS ARE GIVEN TO THE OUTERMOST HOLES)

NOTES:

1. FOR GENERAL NOTES SEE SHEET GN101.
2. ALL MATERIAL A709-50WT2 (UN).
3. T2 - DENOTES MATERIAL SUBJECT TO CHARPY V-NOTCH TESTING.
4. FOR K-FRAME STANDARD DETAILS SEE X111.

NO.	DATE	REMARKS	BY
△			

REVISIONS

Veritas STEEL

2-EAU CLAIRE, WI 3-WAUSAU, WI 4-PALATKA, FL

IENCA 1605

STRUCTURE	CUY-010-1978R, OH-10 EASTBOUND OVER GCRTA BLUE AND GREEN LINES
LOCATION	CLEVELAND, OHIO CUYAHOGA COUNTY
PROJECT NO.	17-3000
ENGINEER	MICHAEL BAKER INTERNATIONAL
CONTRACTOR	KOKOSING
ITEM	INTERMEDIATE K-FRAME
SURFACE PREP.	SEE P101
OPEN HOLES	1 1/16"Ø (U.N.O.)
PAINT	SEE P101

APPROVAL	DRAWN AM 05/31/19	SHEET NO.	PLANT	ORDER NO.
SHOP	CHECKED DP 07/10/19	161	3	317023A-37

LINE	SHIP MARK	NO. OF PCS.	ASS'Y MARK	MATERIAL SHAPE	LENGTH FT.	LENGTH IN.	MATERIAL SPEC.	ITEM NO.	REMARKS
1	162CF1	ONE		INTERMEDIATE K-FRAME					682
2		2	x111a	PL 1/2 x 7	1	0 1/2	A709-50WT2	1147	CVN 25
3		2	x111b	PL 1/2 x 18	1	6 1/4	A709-50WT2	1148	CVN 93
4		1	x111c	PL 1/2 x 10 1/4	2	2	A709-50WT2	1149	CVN 38
5		2	x111v	L4 x 4 x 1/2	4	5 11/16	A709-50WT2	1146	CVN 115
6		1	x111am	L4 x 4 x 1/2	8	11 3/8	A709-50WT2	1145	CVN 115
7		1	x111ba	L6 x 6 x 7/8	8	11 3/8	A709-50WT2	1144	CVN 296

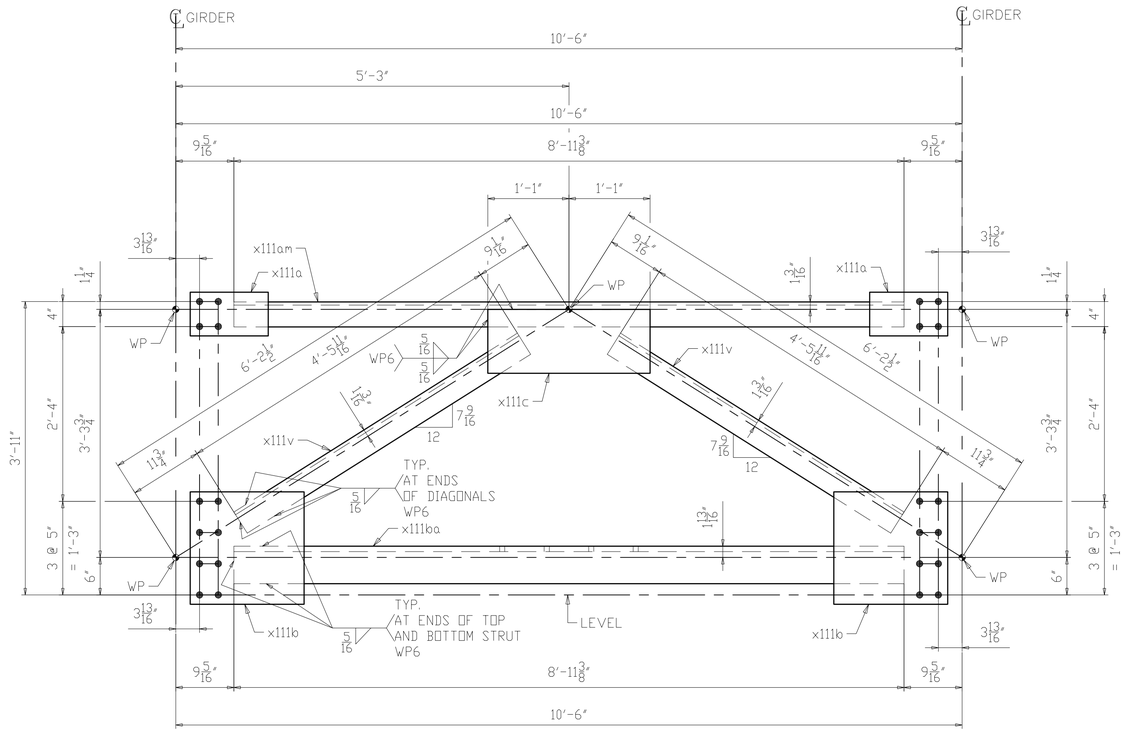

ONE ~ INTERMEDIATE K-FRAME ~ 162CF1

(SPAN 1)

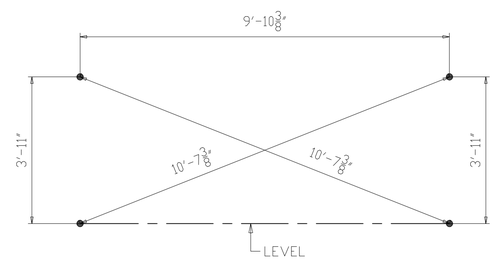

CROSS-CHECK DIAGRAM

(DIMENSIONS ARE GIVEN TO THE OUTERMOST HOLES)

NOTES:

1. FOR GENERAL NOTES SEE SHEET GN101.
2. ALL MATERIAL A709-50WT2 (UN).
3. T2 - DENOTES MATERIAL SUBJECT TO CHARPY V-NOTCH TESTING.
4. FOR K-FRAME STANDARD DETAILS SEE X111.

NO.	DATE	REMARKS	BY

REVISIONS

Veritas STEEL

2-EAU CLAIRE, WI 3-WAUSAU, WI 4-PALATKA, FL

TENCA 1605

STRUCTURE	CUY-010-1978R, OH-10 EASTBOUND OVER GCRTA BLUE AND GREEN LINES
LOCATION	CLEVELAND, OHIO CUYAHOGA COUNTY
PROJECT NO.	17-3000
ENGINEER	MICHAEL BAKER INTERNATIONAL
CONTRACTOR	KOKOSING
ITEM	INTERMEDIATE K-FRAME
SURFACE PREP.	SEE P101 OPEN HOLES 1 1/16"Ø (U.N.O.)
PAINT	SEE P101

APPROVAL	DRAWN AM 05/31/19	SHEET NO.	PLANT	ORDER NO.
SHOP	CHECKED DP 07/10/19	162	3	317023A-37

LINE	SHIP MARK	NO. OF PCS.	ASS'Y MARK	MATERIAL SHAPE	LENGTH FT.	LENGTH IN.	MATERIAL SPEC.	ITEM NO.	REMARKS	
1	163CF1	3		INTERMEDIATE K-FRAME						2041
2		6	x111a	PL 1/2 x 7	1	0 1/2	A709-50WT2	1147	CVN	74
3		6	x111b	PL 1/2 x 18	1	6 1/4	A709-50WT2	1148	CVN	279
4		3	x111c	PL 1/2 x 10 1/4	2	2	A709-50WT2	1149	CVN	113
5		3	x111n	L4 x 4 x 1/2	4	5 7/16	A709-50WT2	1146	CVN	171
6		3	x111aa	L4 x 4 x 1/2	4	5 15/16	A709-50WT2	1146	CVN	173
7		3	x111ak	L4 x 4 x 1/2	8	11 5/16	A709-50WT2	1145	CVN	343
8		3	x111ay	L6 x 6 x 7/8	8	11 5/16	A709-50WT2	1144	CVN	888

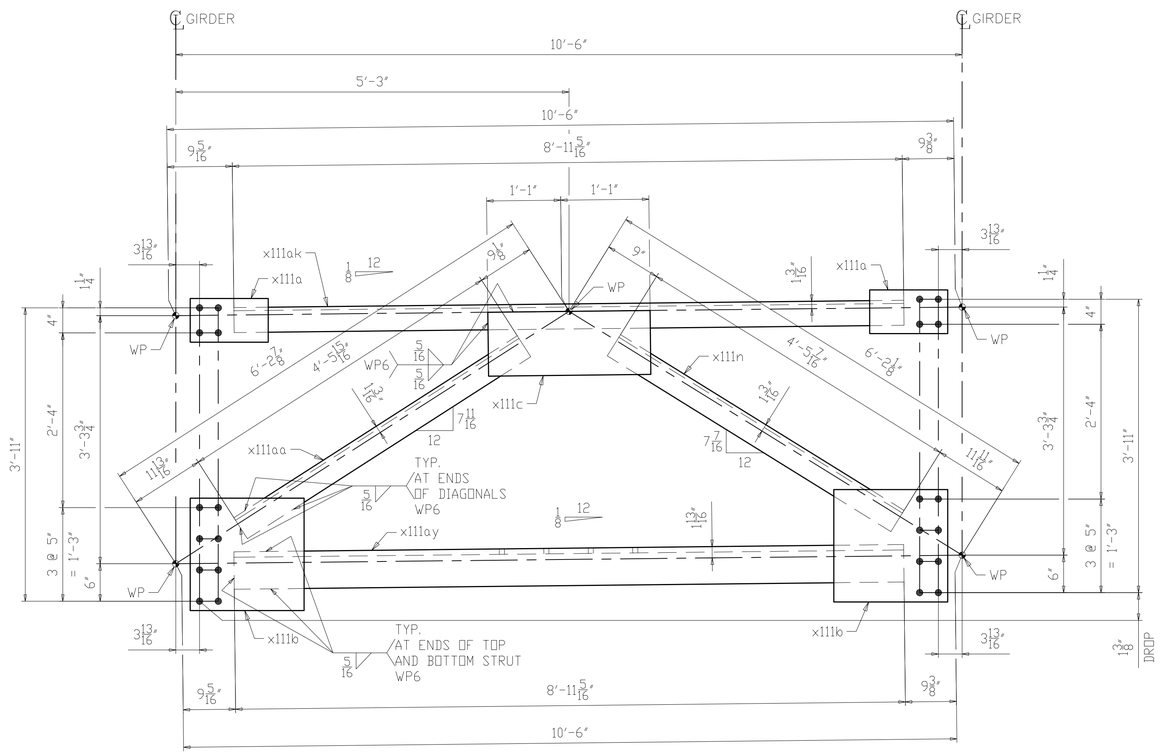

3 ~ INTERMEDIATE K-FRAME ~ 163CF1

(SPAN 2 & 3)

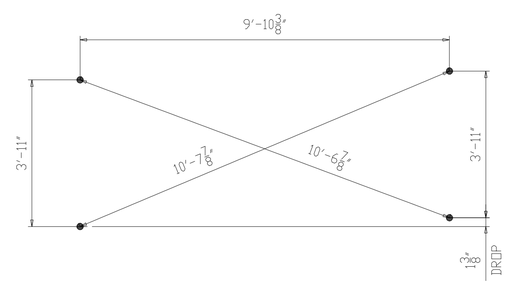

CROSS-CHECK DIAGRAM

(DIMENSIONS ARE GIVEN TO THE OUTERMOST HOLES)

NOTES:

1. FOR GENERAL NOTES SEE SHEET GN101.
2. ALL MATERIAL A709-50WT2 (UN).
3. T2 - DENOTES MATERIAL SUBJECT TO CHARPY V-NOTCH TESTING.
4. FOR K-FRAME STANDARD DETAILS SEE X111.

NO.	DATE	REMARKS	BY

REVISIONS

Veritas STEEL

2-EAU CLAIRE, WI 3-WAUSAU, WI 4-PALATKA, FL

IENCA 1605

STRUCTURE: CUY-010-1978R, OH-10 EASTBOUND OVER GCRTA BLUE AND GREEN LINES

LOCATION: CLEVELAND, OHIO CUYAHOGA COUNTY

PROJECT NO.: 17-3000

ENGINEER: MICHAEL BAKER INTERNATIONAL

CONTRACTOR: KOKOSING

ITEM: INTERMEDIATE K-FRAME

SURFACE PREP.: SEE P101 OPEN HOLES: 1 1/16"Ø (U.N.O.)

PAINT: SEE P101

APPROVAL	DRAWN AM 05/31/19	SHEET NO.	PLANT	ORDER NO.
SHOP	CHECKED DP 07/10/19	163	3	317023A-37

LINE	SHIP MARK	NO. OF PCS.	ASS'Y MARK	MATERIAL SHAPE	LENGTH FT.	LENGTH IN.	MATERIAL SPEC.	ITEM NO.	REMARKS
1	164CF1	3		INTERMEDIATE K-FRAME					2043
2		6	x111a	PL 1/2 x 7	1	0 1/2	A709-50WT2	1147	CVN 74
3		6	x111b	PL 1/2 x 18	1	6 1/4	A709-50WT2	1148	CVN 279
4		3	x111c	PL 1/2 x 10 1/4	2	2	A709-50WT2	1149	CVN 113
5		6	x111v	L4 x 4 x 1/2	4	5 11/16	A709-50WT2	1146	CVN 344
6		3	x111am	L4 x 4 x 1/2	8	11 3/8	A709-50WT2	1145	CVN 344
7		3	x111at	L6 x 6 x 7/8	8	11 3/8	A709-50WT2	1144	CVN 889

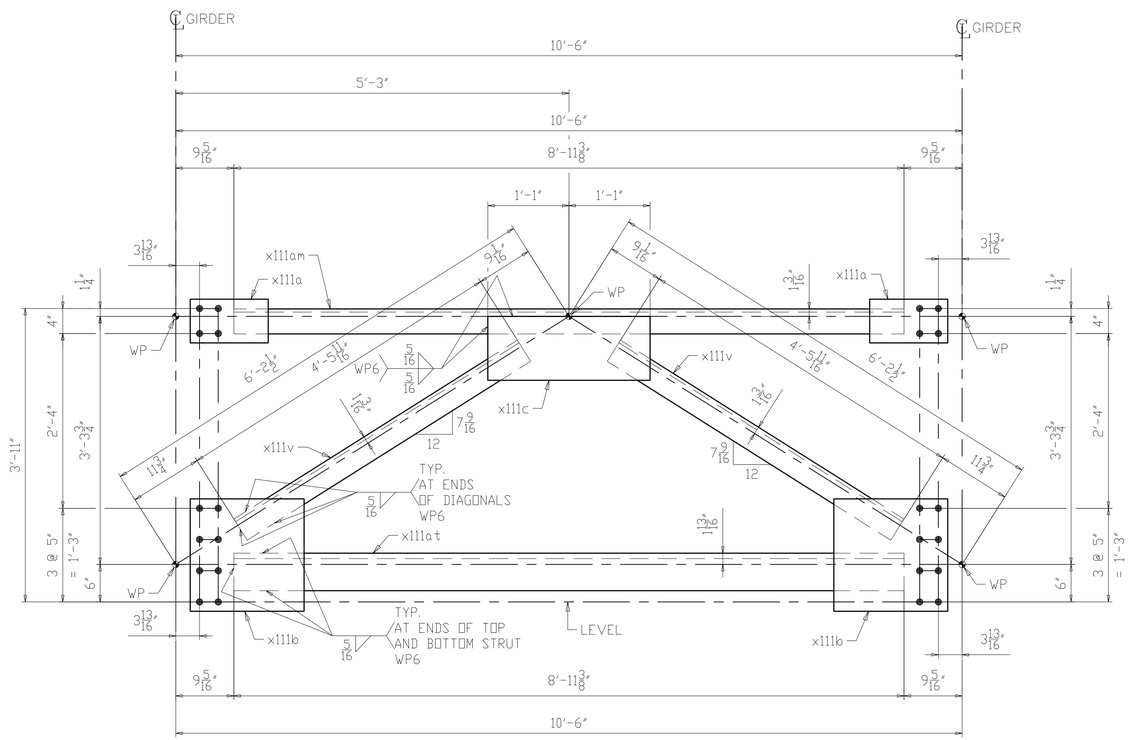

3 ~ INTERMEDIATE K-FRAME ~ 164CF1

(SPAN 1, 2 & 3)

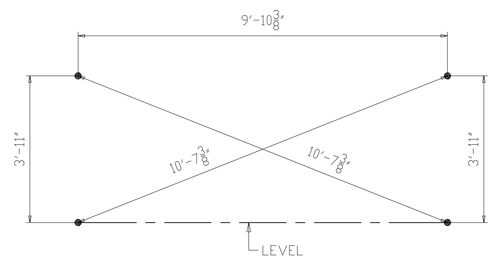

CROSS-CHECK DIAGRAM

(DIMENSIONS ARE GIVEN TO THE OUTERMOST HOLES)

NOTES:

1. FOR GENERAL NOTES SEE SHEET GN101.
2. ALL MATERIAL A709-50WT2 (UN).
3. T2 - DENOTES MATERIAL SUBJECT TO CHARPY V-NOTCH TESTING.
4. FOR K-FRAME STANDARD DETAILS SEE X111.

NO.	DATE	REMARKS	BY

REVISIONS

Veritas STEEL

2-EAU CLAIRE, WI 3-WAUSAU, WI 4-PALATKA, FL

TENCA 1605

STRUCTURE	CUY-010-1978R, OH-10 EASTBOUND OVER GCRTA BLUE AND GREEN LINES
LOCATION	CLEVELAND, OHIO CUYAHOGA COUNTY
PROJECT NO.	17-3000
ENGINEER	MICHAEL BAKER INTERNATIONAL
CONTRACTOR	KOKOSING
ITEM	INTERMEDIATE K-FRAME
SURFACE PREP.	SEE P101 OPEN HOLES 1 1/16"Ø (U.N.O.)
PAINT	SEE P101

APPROVAL	DRAWN AM 05/31/19	SHEET NO.	PLANT	ORDER NO.
SHOP	CHECKED DP 07/10/19	164	3	317023A-37

LINE	SHIP MARK	NO. OF PCS.	ASS'Y MARK	MATERIAL SHAPE	LENGTH FT.	LENGTH IN.	MATERIAL SPEC.	ITEM NO.	REMARKS	
1	165CF1	3		INTERMEDIATE K-FRAME						2041
2		6	x111a	PL 1/2 x 7	1	0 1/2	A709-50WT2	1147	CVN	74
3		6	x111b	PL 1/2 x 18	1	6 1/4	A709-50WT2	1148	CVN	279
4		3	x111c	PL 1/2 x 10 1/4	2	2	A709-50WT2	1149	CVN	113
5		3	x111p	L4 x 4 x 1/2	4	5 9/16	A709-50WT2	1146	CVN	171
6		3	x111y	L4 x 4 x 1/2	4	5 7/8	A709-50WT2	1146	CVN	172
7		3	x111am	L4 x 4 x 1/2	8	11 3/8	A709-50WT2	1145	CVN	344
8		3	x111ap	L6 x 6 x 7/8	8	11 5/16	A709-50WT2	1144	CVN	888

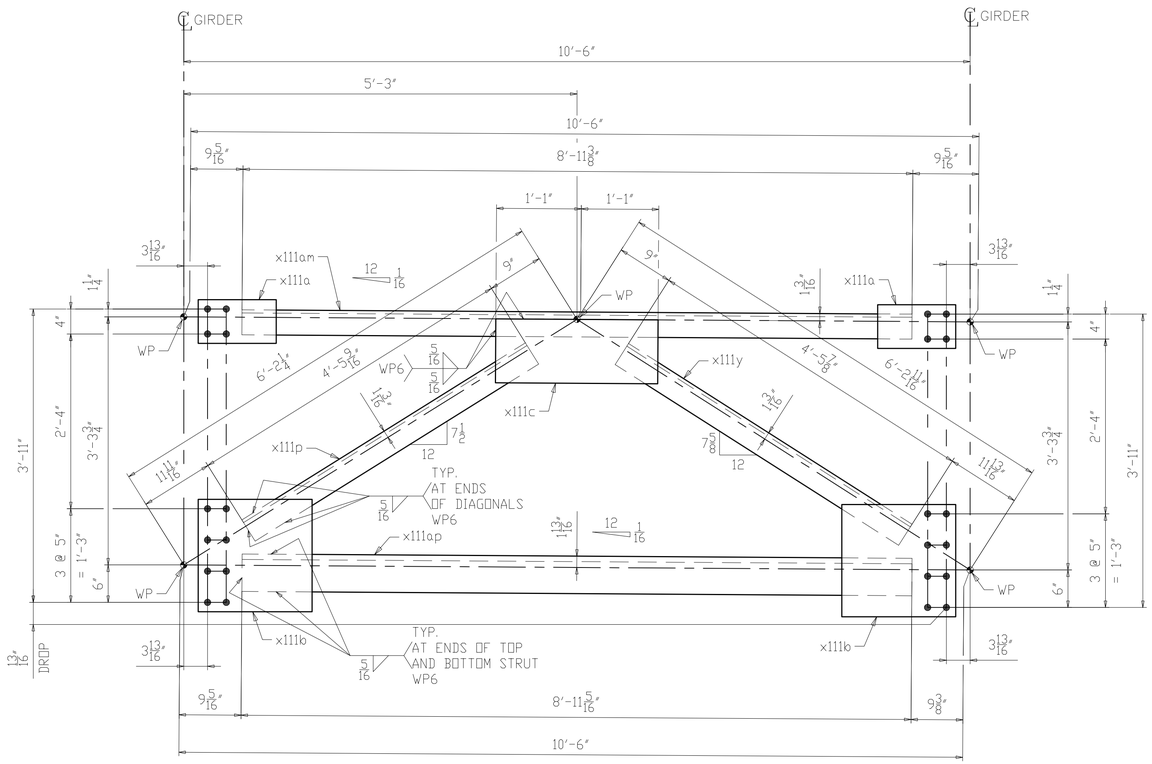

3 ~ INTERMEDIATE K-FRAME ~ 165CF1

(SPAN 1 & 3)

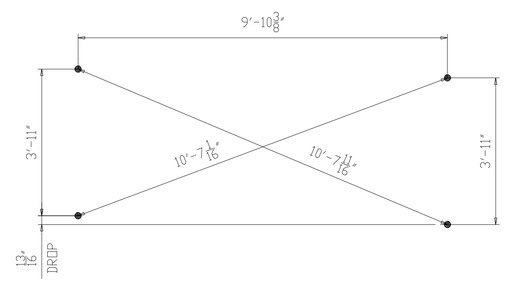

CROSS-CHECK DIAGRAM

(DIMENSIONS ARE GIVEN TO THE OUTERMOST HOLES)

NOTES:

1. FOR GENERAL NOTES SEE SHEET GN101.
2. ALL MATERIAL A709-50WT2 (UN).
3. T2 - DENOTES MATERIAL SUBJECT TO CHARPY V-NOTCH TESTING.
4. FOR K-FRAME STANDARD DETAILS SEE X111.

NO.	DATE	REMARKS	BY

REVISIONS

Veritas STEEL

2-EAU CLAIRE, WI 3-WAUSAU, WI 4-PALATKA, FL

IAS 1605

STRUCTURE	CUY-010-1978R, OH-10 EASTBOUND OVER GCRTA BLUE AND GREEN LINES
LOCATION	CLEVELAND, OHIO CUYAHOGA COUNTY
PROJECT NO.	17-3000
ENGINEER	MICHAEL BAKER INTERNATIONAL
CONTRACTOR	KOKOSING
ITEM	INTERMEDIATE K-FRAME
SURFACE PREP.	SEE P101
OPEN HOLES	1 1/16"Ø (U.N.O.)
PAINT	SEE P101

APPROVAL	DRAWN AM 05/31/19	SHEET NO.	PLANT	ORDER NO.
SHOP	CHECKED DP 07/10/19	165	3	317023A-37

LINE	SHIP MARK	NO. OF PCS.	ASS'Y MARK	MATERIAL SHAPE	LENGTH FT.	LENGTH IN.	MATERIAL SPEC.	ITEM NO.	REMARKS
1	166CF1	2		INTERMEDIATE K-FRAME					1362
2		4	x111a	PL 1/2 x 7	1	0 1/2	A709-50WT2	1147	CVN 50
3		4	x111b	PL 1/2 x 18	1	6 1/4	A709-50WT2	1148	CVN 186
4		2	x111c	PL 1/2 x 10 1/4	2	2	A709-50WT2	1149	CVN 76
5		2	x111n	L4 x 4 x 1/2	4	5 7/16	A709-50WT2	1146	CVN 114
6		2	x111ab	L4 x 4 x 1/2	4	6	A709-50WT2	1146	CVN 115
7		2	x111ak	L4 x 4 x 1/2	8	11 5/16	A709-50WT2	1145	CVN 229
8		2	x111ap	L6 x 6 x 7/8	8	11 5/16	A709-50WT2	1144	CVN 592

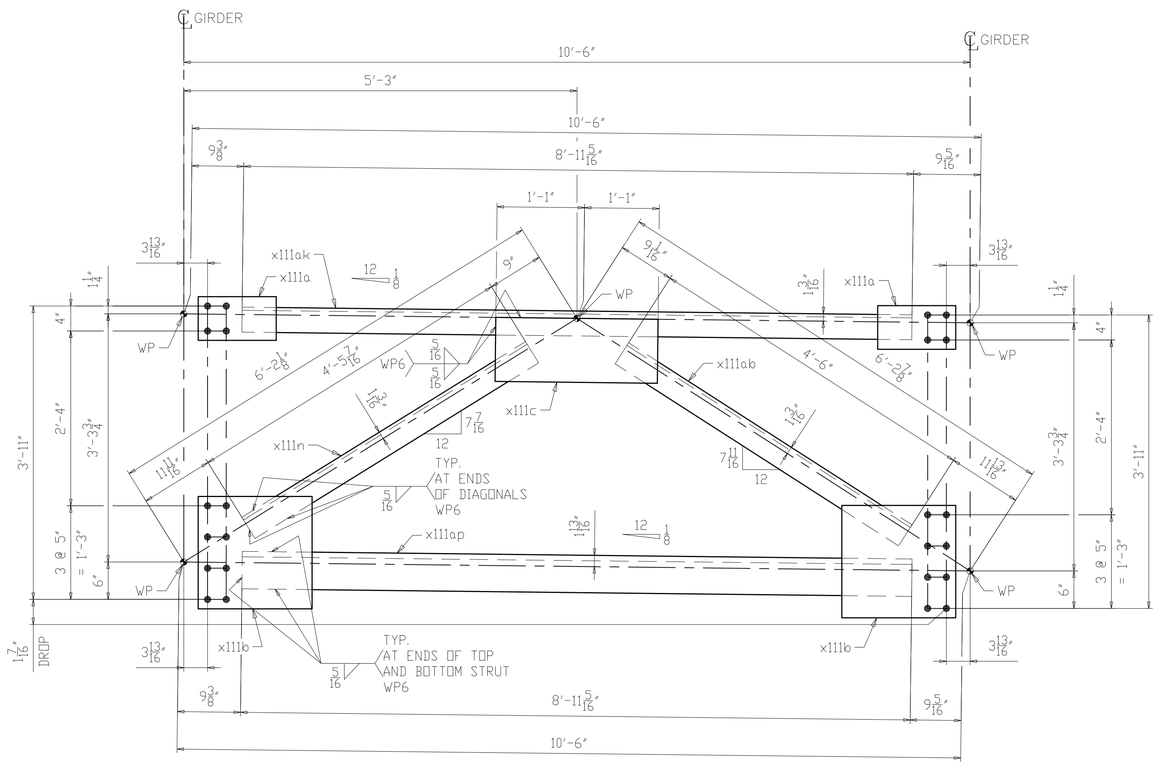

2 ~ INTERMEDIATE K-FRAME ~ 166CF1

(SPAN 1)

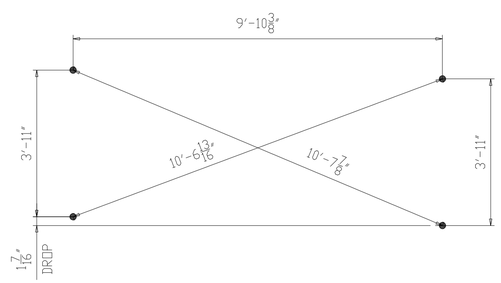

CROSS-CHECK DIAGRAM

(DIMENSIONS ARE GIVEN TO THE OUTERMOST HOLES)

NOTES:
1. FOR GENERAL NOTES SEE SHEET GN101.
2. ALL MATERIAL A709-50WT2 (UN).
3. T2 - DENOTES MATERIAL SUBJECT TO CHARPY V-NOTCH TESTING.
4. FOR K-FRAME STANDARD DETAILS SEE X111.

NO.	DATE	REMARKS	BY

REVISIONS

Veritas STEEL

2-EAU CLAIRE, WI 3-WAUSAU, WI 4-PALATKA, FL

TENCA 1605

STRUCTURE	CUY-010-1978R, OH-10 EASTBOUND OVER GCRTA BLUE AND GREEN LINES
LOCATION	CLEVELAND, OHIO CUYAHOGA COUNTY
PROJECT NO.	17-3000
ENGINEER	MICHAEL BAKER INTERNATIONAL
CONTRACTOR	KOKOSING
ITEM	INTERMEDIATE K-FRAME
SURFACE PREP.	SEE P101
OPEN HOLES	1 1/16"Ø (U.N.O.)
PAINT	SEE P101

APPROVAL	DRAWN AM 05/31/19	SHEET NO.	PLANT	ORDER NO.
SHOP	CHECKED DP 07/10/19	166	3	317023A-37

LINE	SHIP MARK	NO. OF PCS.	ASS'Y MARK	MATERIAL SHAPE	LENGTH FT.	LENGTH IN.	MATERIAL SPEC.	ITEM NO.	REMARKS	
1	167CF1	2		INTERMEDIATE K-FRAME						1362
2		4	x111a	PL 1/2 x 7	1	0 1/2	A709-50WT2	1147	CVN	50
3		4	x111b	PL 1/2 x 18	1	6 1/4	A709-50WT2	1148	CVN	186
4		2	x111c	PL 1/2 x 10 1/4	2	2	A709-50WT2	1149	CVN	76
5		2	x111m	L4 x 4 x 1/2	4	5 3/8	A709-50WT2	1146	CVN	114
6		2	x111ab	L4 x 4 x 1/2	4	6	A709-50WT2	1146	CVN	115
7		2	x111ak	L4 x 4 x 1/2	8	11 5/16	A709-50WT2	1145	CVN	229
8		2	x111ap	L6 x 6 x 7/8	8	11 5/16	A709-50WT2	1144	CVN	592

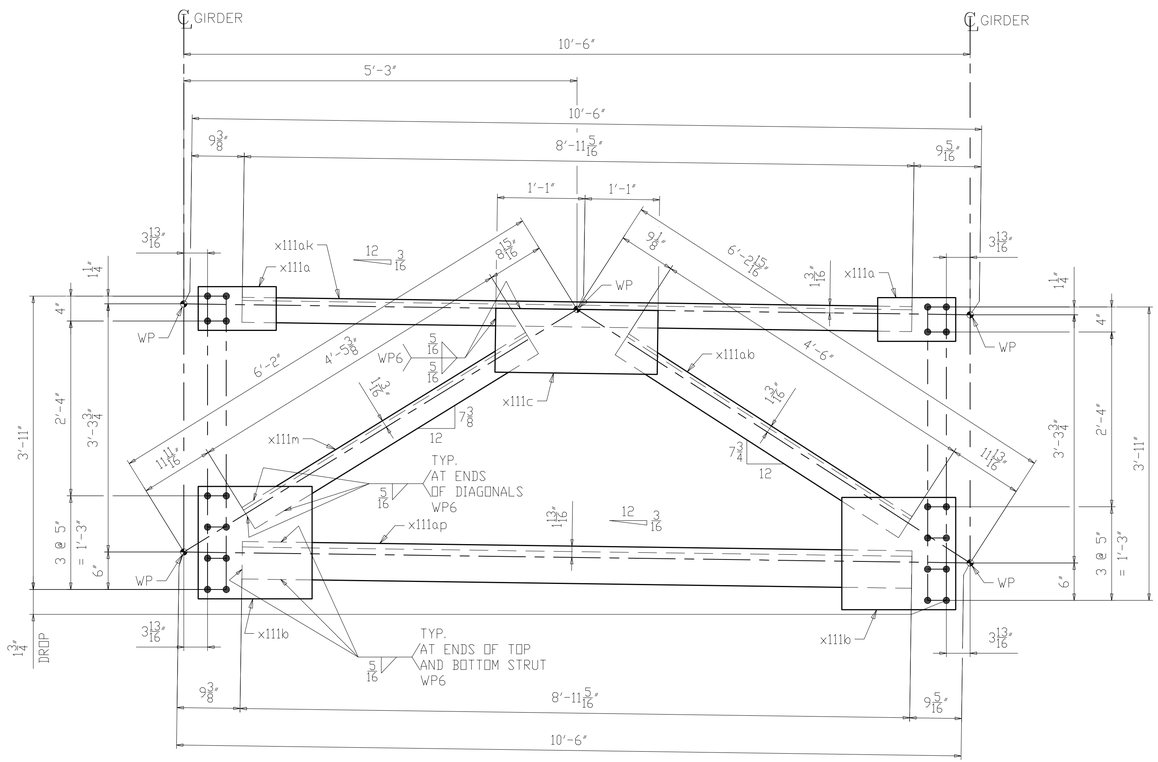

2 ~ INTERMEDIATE K-FRAME ~ 167CF1

(SPAN 1)

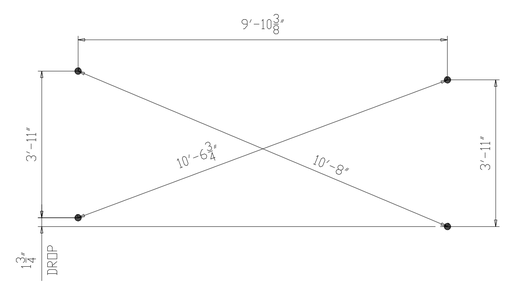

CROSS-CHECK DIAGRAM

(DIMENSIONS ARE GIVEN TO THE OUTERMOST HOLES)

NOTES:
1. FOR GENERAL NOTES SEE SHEET GN101.
2. ALL MATERIAL A709-50WT2 (UN).
3. T2 - DENOTES MATERIAL SUBJECT TO CHARPY V-NOTCH TESTING.
4. FOR K-FRAME STANDARD DETAILS SEE X111.

NO.	DATE	REMARKS	BY

REVISIONS

Veritas STEEL
2-EAU CLAIRE, WI 3-WAUSAU, WI 4-PALATKA, FL
IENCA 1605

STRUCTURE	CUY-010-1978R, OH-10 EASTBOUND OVER GCRTA BLUE AND GREEN LINES
LOCATION	CLEVELAND, OHIO CUYAHOGA COUNTY
PROJECT NO.	17-3000
ENGINEER	MICHAEL BAKER INTERNATIONAL
CONTRACTOR	KOKOSING
ITEM	INTERMEDIATE K-FRAME
SURFACE PREP.	SEE P101
OPEN HOLES	1 1/16"Ø (U.N.O.)
PAINT	SEE P101

APPROVAL	DRAWN AM 05/31/19	SHEET NO.	PLANT	ORDER NO.
SHOP	CHECKED DP 07/10/19	167	3	317023A-37

LINE	SHIP MARK	NO. OF PCS.	ASS'Y MARK	MATERIAL SHAPE	LENGTH FT.	LENGTH IN.	MATERIAL SPEC.	ITEM NO.	REMARKS	
1	168CF1	4		INTERMEDIATE K-FRAME						2723
2		8	x111a	PL 1/2 x 7	1	0 1/2	A709-50WT2	1147	CVN	99
3		8	x111b	PL 1/2 x 18	1	6 1/4	A709-50WT2	1148	CVN	372
4		4	x111c	PL 1/2 x 10 1/4	2	2	A709-50WT2	1149	CVN	151
5		4	x111t	L4 x 4 x 1/2	4	5 5/8	A709-50WT2	1146	CVN	229
6		4	x111w	L4 x 4 x 1/2	4	5 3/4	A709-50WT2	1146	CVN	229
7		4	x111am	L4 x 4 x 1/2	8	11 3/8	A709-50WT2	1145	CVN	458
8		4	x111at	L6 x 6 x 7/8	8	11 3/8	A709-50WT2	1144	CVN	1185

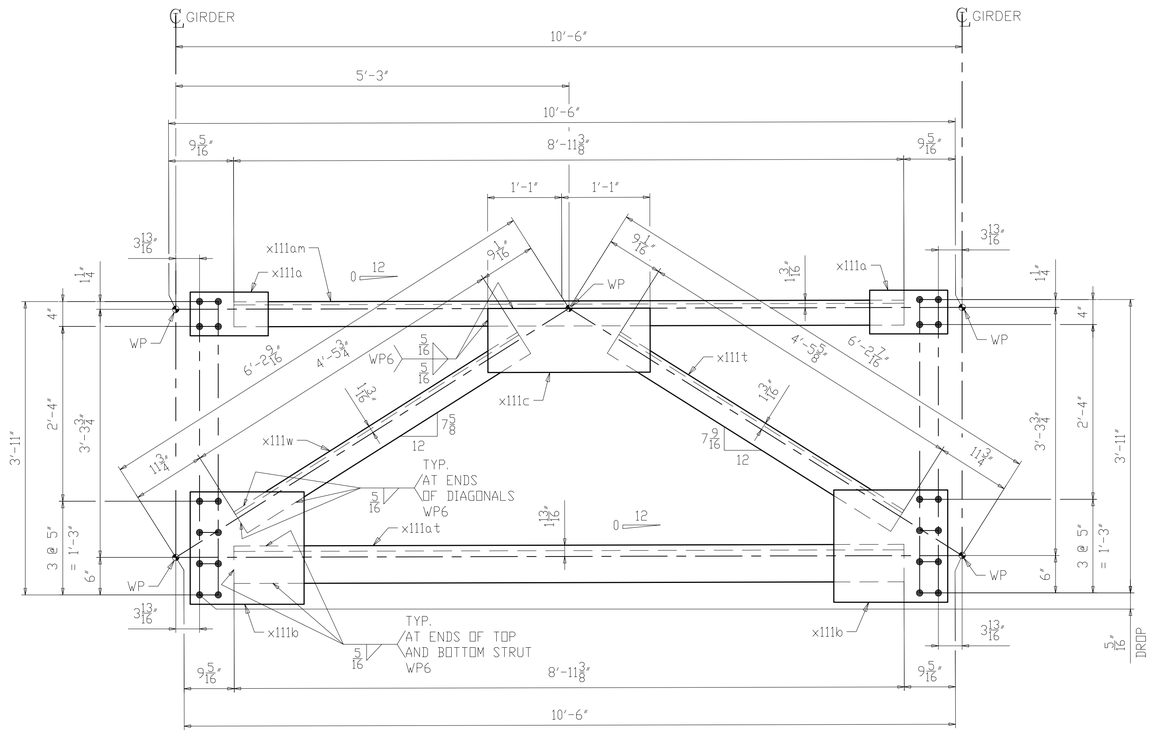

4 ~ INTERMEDIATE K-FRAME ~ 168CF1

(SPAN 2 & 3)

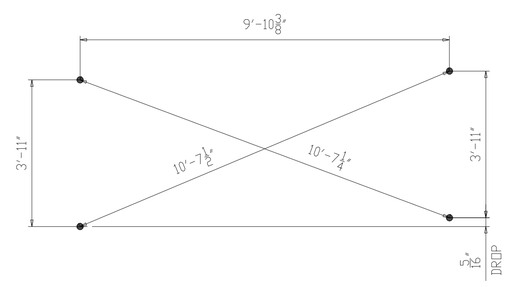

CROSS-CHECK DIAGRAM

(DIMENSIONS ARE GIVEN TO THE OUTERMOST HOLES)

NOTES:

1. FOR GENERAL NOTES SEE SHEET GN101.
2. ALL MATERIAL A709-50WT2 (UN).
3. T2 - DENOTES MATERIAL SUBJECT TO CHARPY V-NOTCH TESTING.
4. FOR K-FRAME STANDARD DETAILS SEE X111.

NO.	DATE	REMARKS	BY

REVISIONS

Veritas STEEL

2-EAU CLAIRE, WI 3-WAUSAU, WI 4-PALATKA, FL

TENCA 1605

STRUCTURE	CUY-010-1978R, OH-10 EASTBOUND OVER GCRTA BLUE AND GREEN LINES
LOCATION	CLEVELAND, OHIO CUYAHOGA COUNTY
PROJECT NO.	17-3000
ENGINEER	MICHAEL BAKER INTERNATIONAL
CONTRACTOR	KOKOSING
ITEM	INTERMEDIATE K-FRAME
SURFACE PREP.	SEE P101 OPEN HOLES 1 1/16"Ø (U.N.O.)
PAINT	SEE P101

APPROVAL	DRAWN AM 05/31/19	SHEET NO.	PLANT	ORDER NO.
SHOP	CHECKED DP 07/10/19	168	3	317023A-37

LINE	SHIP MARK	NO. OF PCS.	ASS'Y MARK	MATERIAL SHAPE	LENGTH FT.	LENGTH IN.	MATERIAL SPEC.	ITEM NO.	REMARKS
1	169CF1	5		INTERMEDIATE K-FRAME					3405
2		10	x111a	PL 1/2 x 7	1	0 1/2	A709-50WT2	1147	CVN 124
3		10	x111b	PL 1/2 x 18	1	6 1/4	A709-50WT2	1148	CVN 465
4		5	x111c	PL 1/2 x 10 1/4	2	2	A709-50WT2	1149	CVN 189
5		5	x111t	L4 x 4 x 1/2	4	5 5/8	A709-50WT2	1146	CVN 286
6		5	x111w	L4 x 4 x 1/2	4	5 3/4	A709-50WT2	1146	CVN 287
7		5	x111am	L4 x 4 x 1/2	8	11 3/8	A709-50WT2	1145	CVN 573
8		5	x111at	L6 x 6 x 7/8	8	11 3/8	A709-50WT2	1144	CVN 1481

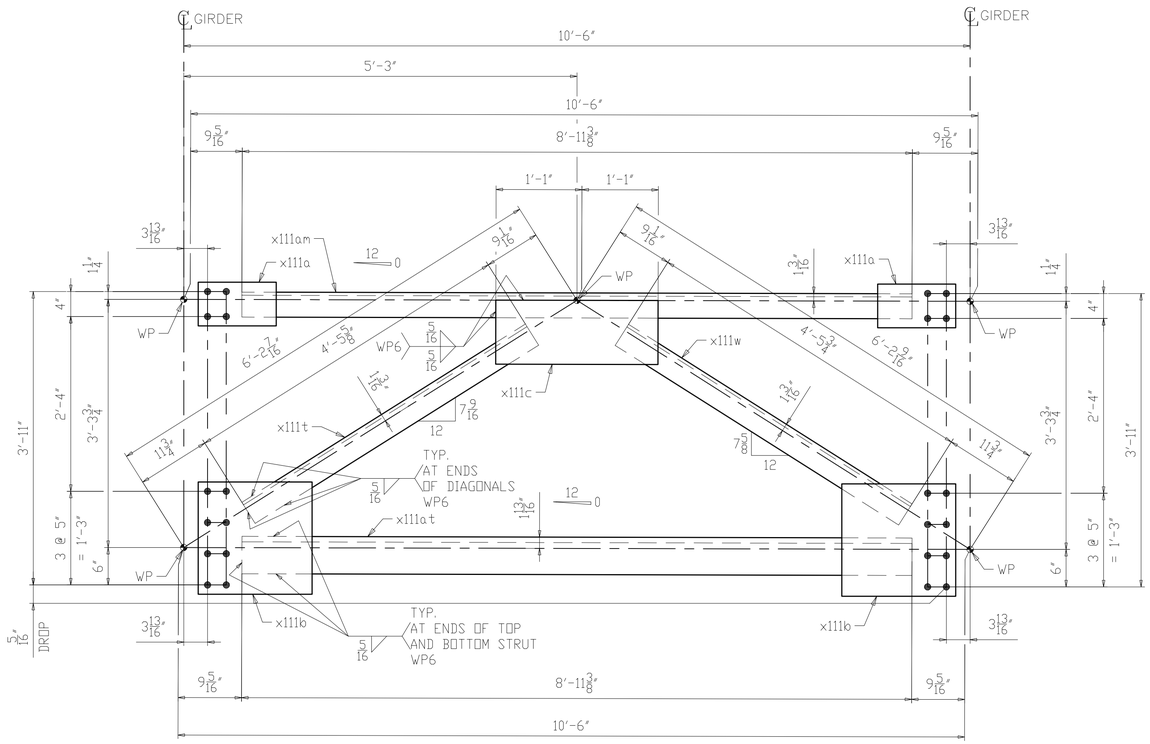

5 ~ INTERMEDIATE K-FRAME ~ 169CF1
(SPAN 2 & 3)

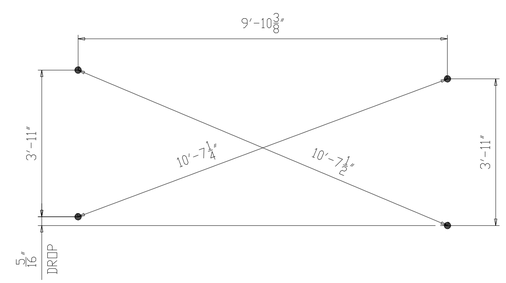

CROSS-CHECK DIAGRAM
(DIMENSIONS ARE GIVEN TO THE OUTERMOST HOLES)

NOTES:
1. FOR GENERAL NOTES SEE SHEET GN101.
2. ALL MATERIAL A709-50WT2 (UN).
3. T2 - DENOTES MATERIAL SUBJECT TO CHARPY V-NOTCH TESTING.
4. FOR K-FRAME STANDARD DETAILS SEE X111.

NO.	DATE	REMARKS	BY

REVISIONS

Veritas STEEL
2-EAU CLAIRE, WI 3-WAUSAU, WI 4-PALATKA, FL
TENCA 1605

STRUCTURE: CUY-010-1978R, OH-10 EASTBOUND OVER GCRTA BLUE AND GREEN LINES
LOCATION: CLEVELAND, OHIO CUYAHOGA COUNTY
PROJECT NO.: 17-3000
ENGINEER: MICHAEL BAKER INTERNATIONAL
CONTRACTOR: KOKOSING

ITEM: INTERMEDIATE K-FRAME
SURFACE PREP.: SEE P101 OPEN HOLES: 1 1/16"ø (U.N.O.)
PAINT: SEE P101

APPROVAL	DRAWN AM 05/31/19	SHEET NO.	PLANT	ORDER NO.
SHOP	CHECKED DP 07/10/19	169	3	317023A-37

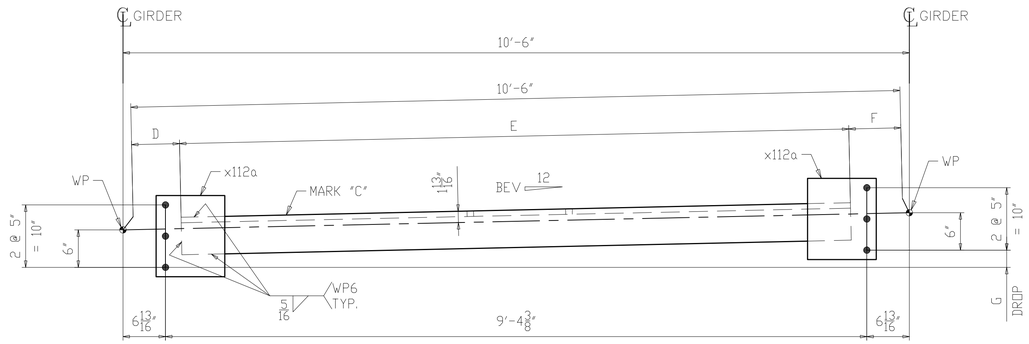

QTY "B" ~ UTILITY SUPPORT ~ MARK "A"

(FOR GAS LINE)

	MARK "A"	QTY "B"	MARK "C"	D	E	F	DROP "G"	BEV
1	170US1	7	x112b	9 3/8"	8'-11 1/4"	9 3/8"	2 3/4"	1/4
	170US2	6	x112b	9 3/8"	8'-11 1/4"	9 3/8"	2 7/16"	1/4
	170US3	3	x112c	9 5/16"	8'-11 5/16"	9 3/8"	2 1/8"	3/16
1	170US4	3	x112c	9 5/16"	8'-11 5/16"	9 3/8"	1 7/8"	3/16
	170US5	3	x112c	9 5/16"	8'-11 5/16"	9 3/8"	1 1/2"	1/8
1	170US1P	1	x112b	9 3/8"	8'-11 1/4"	9 3/8"	2 3/4"	1/4
	170US4P	1	x112c	9 5/16"	8'-11 5/16"	9 3/8"	1 7/8"	3/16

	LINE	SHIP MARK	NO. OF PCS.	ASS'Y MARK	MATERIAL SHAPE	LENGTH FT.	LENGTH IN.	MATERIAL SPEC.	ITEM NO.	REMARKS
1	1	170US1	7		UTILITY SUPPORT					2355
	2		14	x112a	PL 1/2 x 11	1	1	A709-50WT2	1151	CVN 284
	3		7	x112b	L6 x 6 x 7/8	8	11 1/4	A709-50WT2	1150	CVN 2071
	4									
	5	170US2	6		UTILITY SUPPORT					2018
	6		12	x112a	PL 1/2 x 11	1	1	A709-50WT2	1151	CVN 243
	7		6	x112b	L6 x 6 x 7/8	8	11 1/4	A709-50WT2	1150	CVN 1775
	8									
	9	170US3	3		UTILITY SUPPORT					1010
	10		6	x112a	PL 1/2 x 11	1	1	A709-50WT2	1151	CVN 122
	11		3	x112c	L6 x 6 x 7/8	8	11 5/16	A709-50WT2	1150	CVN 888
	12									
1	13	170US4	3		UTILITY SUPPORT					1010
	14		6	x112a	PL 1/2 x 11	1	1	A709-50WT2	1151	CVN 122
	15		3	x112c	L6 x 6 x 7/8	8	11 5/16	A709-50WT2	1150	CVN 888
	16									
	17	170US5	3		UTILITY SUPPORT					1010
	18		6	x112a	PL 1/2 x 11	1	1	A709-50WT2	1151	CVN 122
	19		3	x112c	L6 x 6 x 7/8	8	11 5/16	A709-50WT2	1150	CVN 888
	20									
1	21	170US1P	1		UTILITY SUPPORT					PAINTED 337
	22		2	x112a	PL 1/2 x 11	1	1	A709-50WT2	1151	CVN 41
	23		1	x112b	L6 x 6 x 7/8	8	11 1/4	A709-50WT2	1150	CVN 296
	24									
	25	170US4P	1		UTILITY SUPPORT					PAINTED 337
	26		2	x112a	PL 1/2 x 11	1	1	A709-50WT2	1151	CVN 41
	27		1	x112c	L6 x 6 x 7/8	8	11 5/16	A709-50WT2	1150	CVN 296

NOTES:
1. FOR GENERAL NOTES SEE SHEET GN101.
2. ALL MATERIAL A709-50WT2 (UN).
3. T2 - DENOTES MATERIAL SUBJECT TO CHARPY V-NOTCH TESTING.
4. FOR UTILITY SUPPORT STANDARD DETAILS SEE X112.
1 5. FOR PAINT NOTES SEE SHEET P101.

NO.	DATE	REMARKS	BY
1	11/01/19	AS PER APPROVAL COMMENTS	DP

REVISIONS

Veritas STEEL
2-EAU CLAIRE, WI 3-WAUSAU, WI 4-PALATKA, FL
IAS 1605

STRUCTURE: CUY-010-1978R, OH-10 EASTBOUND OVER GCRTA BLUE AND GREEN LINES
LOCATION: CLEVELAND, OHIO CUYAHOGA COUNTY
PROJECT NO.: 17-3000
ENGINEER: MICHAEL BAKER INTERNATIONAL
CONTRACTOR: KOKOSING

ITEM: GAS LINE UTILITY SUPPORT
SURFACE PREP.: SEE P101 OPEN HOLES: 1 1/16"Ø (U.N.O.)
PAINT: SEE P101

APPROVAL	DRAWN AM 06/03/19	SHEET NO.	PLANT	ORDER NO.
SHOP	CHECKED DP 07/10/19	170	3	317023A-37

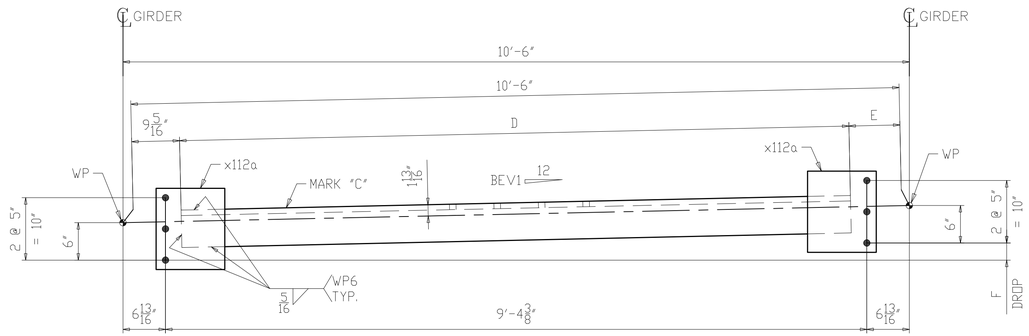

QTY "B" ~ UTILITY SUPPORT ~ MARK "A"

(FOR CONDUITS)

	MARK "A"	QTY "B"	MARK "C"	D	E	DROP "F"	BEV1
1	171US1	7	x112d	8'-11 5/16"	9 3/8"	1 5/16"	1/8
	171US2	4	x112d	8'-11 5/16"	9 3/8"	1"	1/8
	171US3	2	x112d	8'-11 5/16"	9 3/8"	3/4"	1/16
1	171US4	3	x112f	8'-11 3/8"	9 5/16"	3/8"	1/16
1	171US1P	1	x112d	8'-11 5/16"	9 3/8"	1 5/16"	1/8
	171US4P	1	x112f	8'-11 3/8"	9 5/16"	3/8"	1/16

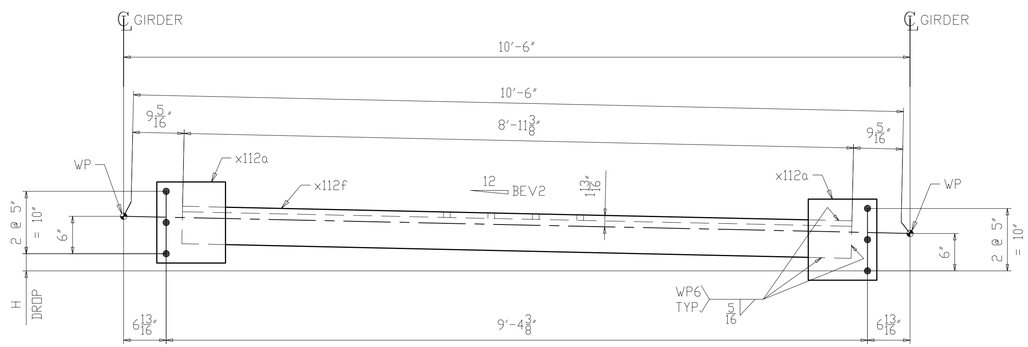

QTY "G" ~ UTILITY SUPPORT ~ MARK "F"

(FOR CONDUITS)

MARK "F"	QTY "G"	DROP "H"	BEV2
171US5	2	1/8"	0
171US6	2	7/16"	1/16

MATERIAL

	LINE	SHIP MARK	NO. OF PCS.	ASS'Y MARK	SHAPE	LENGTH FT.	LENGTH IN.	MATERIAL SPEC.	ITEM NO.	REMARKS	
1	1	171US1	7		UTILITY SUPPORT						2356
	2		14	x112a	PL 1/2 x 11	1	1	A709-50WT2	1151	CVN	284
	3		7	x112d	L6 x 6 x 7/8	8	11 5/16	A709-50WT2	1150	CVN	2072
	4										
	5	171US2	4		UTILITY SUPPORT						1346
	6		8	x112a	PL 1/2 x 11	1	1	A709-50WT2	1151	CVN	162
	7		4	x112d	L6 x 6 x 7/8	8	11 5/16	A709-50WT2	1150	CVN	1184
	8										
	9	171US3	2		UTILITY SUPPORT						673
	10		4	x112a	PL 1/2 x 11	1	1	A709-50WT2	1151	CVN	81
	11		2	x112d	L6 x 6 x 7/8	8	11 5/16	A709-50WT2	1150	CVN	592
	12										
1	13	171US4	3		UTILITY SUPPORT						1011
	14		6	x112a	PL 1/2 x 11	1	1	A709-50WT2	1151	CVN	122
	15		3	x112f	L6 x 6 x 7/8	8	11 3/8	A709-50WT2	1150	CVN	889
	16										
	17	171US5	2		UTILITY SUPPORT						673
	18		4	x112a	PL 1/2 x 11	1	1	A709-50WT2	1151	CVN	81
	19		2	x112f	L6 x 6 x 7/8	8	11 3/8	A709-50WT2	1150	CVN	592
	20										
	21	171US6	2		UTILITY SUPPORT						673
	22		4	x112a	PL 1/2 x 11	1	1	A709-50WT2	1151	CVN	81
	23		2	x112f	L6 x 6 x 7/8	8	11 3/8	A709-50WT2	1150	CVN	592
	24										
1	25	171US1P	1		UTILITY SUPPORT					PAINTED	337
	26		2	x112a	PL 1/2 x 11	1	1	A709-50WT2	1151	CVN	41
	27		1	x112d	L6 x 6 x 7/8	8	11 5/16	A709-50WT2	1150	CVN	296
	28										
	29	171US4P	1		UTILITY SUPPORT					PAINTED	337
	30		2	x112a	PL 1/2 x 11	1	1	A709-50WT2	1151	CVN	41
	31		1	x112f	L6 x 6 x 7/8	8	11 3/8	A709-50WT2	1150	CVN	296

NOTES:
1. FOR GENERAL NOTES SEE SHEET GN101.
2. ALL MATERIAL A709-50WT2 (UN).
3. T2 - DENOTES MATERIAL SUBJECT TO CHARPY V-NOTCH TESTING.
4. FOR UTILITY SUPPORT STANDARD DETAILS SEE X112.
1 5. FOR PAINT NOTES SEE SHEET P101.

NO.	DATE	REMARKS	BY
1	11/01/19	AS PER APPROVAL COMMENTS	DP

REVISIONS

Veritas STEEL
2-EAU CLAIRE, WI 3-WAUSAU, WI 4-PALATKA, FL
TENCA 1605

STRUCTURE: CUY-010-1978R, OH-10 EASTBOUND OVER GCRTA BLUE AND GREEN LINES
LOCATION: CLEVELAND, OHIO CUYAHOGA COUNTY
PROJECT NO.: 17-3000
ENGINEER: MICHAEL BAKER INTERNATIONAL
CONTRACTOR: KOKOSING

ITEM: CONDUIT UTILITY SUPPORT
SURFACE PREP.: SEE P101 OPEN HOLES: 1 1/16"Ø (U.N.O.)
PAINT: SEE P101

APPROVAL	DRAWN AM 06/03/19	SHEET NO.	PLANT	ORDER NO.
SHOP	CHECKED DP 07/10/19	171	3	317023A-37

LINE	SHIP MARK	NO. OF PCS.	ASS'Y MARK	MATERIAL SHAPE	LENGTH FT.	LENGTH IN.	MATERIAL SPEC.	ITEM NO.	REMARKS
1	172LB1	2		LEAN ON BRACING					342
2		4	x112g	PL 1/2 x 7	1	1	A709-50WT2	1154	CVN 52
3		2	x112m	L5 x 5 x 1/2	8	11 5/16	A709-50WT2	1152	CVN 290
4									
5	172LB2	1		LEAN ON BRACING					171
6		2	x112g	PL 1/2 x 7	1	1	A709-50WT2	1154	CVN 26
7		1	x112n	L5 x 5 x 1/2	8	11 3/8	A709-50WT2	1152	CVN 145
8									
9	172LB3	1		LEAN ON BRACING					171
10		2	x112g	PL 1/2 x 7	1	1	A709-50WT2	1154	CVN 26
11		1	x112n	L5 x 5 x 1/2	8	11 3/8	A709-50WT2	1152	CVN 145
12									
13	172LB4	2		LEAN ON BRACING					342
14		4	x112g	PL 1/2 x 7	1	1	A709-50WT2	1154	CVN 52
15		2	x112m	L5 x 5 x 1/2	8	11 5/16	A709-50WT2	1152	CVN 290
16									
17	172LB5	3		LEAN ON BRACING					512
18		6	x112g	PL 1/2 x 7	1	1	A709-50WT2	1154	CVN 77
19		3	x112m	L5 x 5 x 1/2	8	11 5/16	A709-50WT2	1152	CVN 435
20									
21	172LB6	1		LEAN ON BRACING					171
22		2	x112g	PL 1/2 x 7	1	1	A709-50WT2	1154	CVN 26
23		1	x112m	L5 x 5 x 1/2	8	11 5/16	A709-50WT2	1152	CVN 145

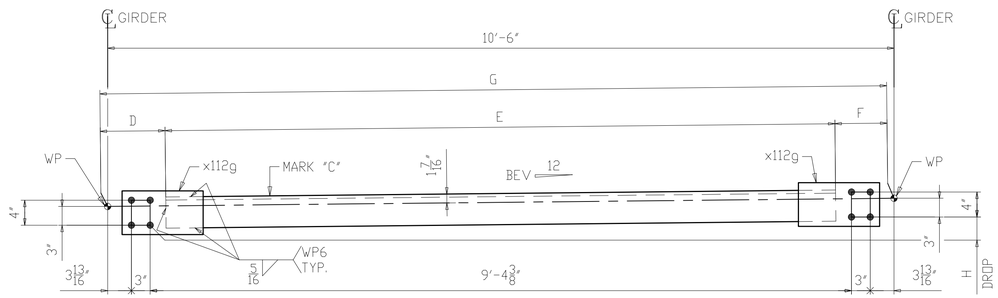

QTY "B" ~ LEAN ON BRACING ~ MARK "A"

MARK "A"	QTY "B"	MARK "C"	D	E	F	G	DROP "H"	BEV
172LB1	2	x112m	9 5/16"	8'-11 5/16"	9 3/8"	10'-6"	1 5/16"	1/8
172LB2	1	x112n	9 5/16"	8'-11 3/8"	9 5/16"	10'-6"	1/2"	1/16
172LB3	1	x112n	9 5/16"	8'-11 3/8"	9 5/16"	10'-6"	1/8"	0
172LB4	2	x112m	9 3/8"	8'-11 5/16"	9 3/8"	10'-6 1/16"	2 7/8"	1/4
172LB5	3	x112m	9 5/16"	8'-11 5/16"	9 3/8"	10'-6"	2 1/2"	1/4
172LB6	1	x112m	9 5/16"	8'-11 5/16"	9 3/8"	10'-6"	1 3/4"	3/16

NOTES:
1. FOR GENERAL NOTES SEE SHEET GN101.
2. ALL MATERIAL A709-50WT2 (UN).
3. T2 - DENOTES MATERIAL SUBJECT TO CHARPY V-NOTCH TESTING.
4. FOR LEAN ON BRACING STANDARD DETAILS SEE X112.

NO.	DATE	REMARKS	BY
△			

REVISIONS

Veritas STEEL
2-EAU CLAIRE, WI 3-WAUSAU, WI 4-PALATKA, FL
IENCA 1605

STRUCTURE: CUY-010-1978R, OH-10 EASTBOUND OVER GCRTA BLUE AND GREEN LINES
LOCATION: CLEVELAND, OHIO CUYAHOGA COUNTY
PROJECT NO. 17-3000
ENGINEER: MICHAEL BAKER INTERNATIONAL
CONTRACTOR: KOKOSING

ITEM: LEAN ON BRACING
SURFACE PREP. SEE P101 OPEN HOLES 1 1/16"Ø (U.N.O.)
PAINT: SEE P101

APPROVAL	DRAWN AM 06/03/19	SHEET NO.	PLANT	ORDER NO.
SHOP	CHECKED DP 07/10/19	172	3	317023A-37

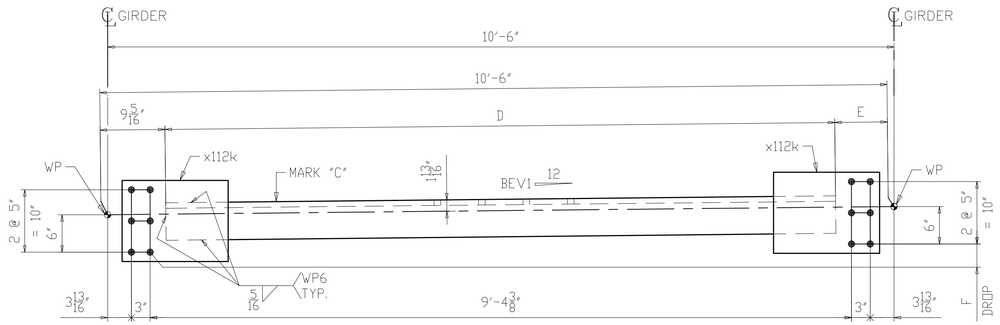

QTY "B" ~ LEAN ON BRACING ~ MARK "A"

MARK "A"	QTY "B"	MARK "C"	D	E	DROP "F"	BEV1
173LB1	2	x112v	8'-11 5/16"	9 3/8"	1 5/16"	1/8
173LB2	1	x112w	8'-11 3/8"	9 5/16"	1/2"	1/16
173LB3	1	x112w	8'-11 3/8"	9 5/16"	1/8"	0

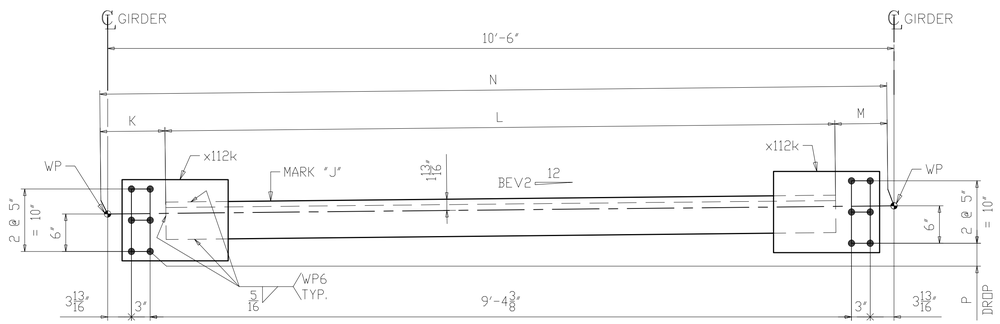

QTY "H" ~ LEAN ON BRACING ~ MARK "G"

MARK "G"	QTY "H"	MARK "J"	K	L	M	N	DROP "P"	BEV2
173LB4	2	x112p	9 3/8"	8'-11 1/4"	9 7/16"	10'-6 1/16"	2 7/8"	1/4
173LB5	3	x112p	9 3/8"	8'-11 1/4"	9 3/8"	10'-6"	2 1/2"	1/4
173LB6	1	x112t	9 5/16"	8'-11 5/16"	9 3/8"	10'-6"	1 3/4"	3/16

LINE	SHIP MARK	NO. OF PCS.	ASS'Y MARK	MATERIAL SHAPE	LENGTH FT.	LENGTH IN.	MATERIAL SPEC.	ITEM NO.	REMARKS
1	173LB1	2		LEAN ON BRACING					717
2		4	x112k	PL 1/2 x 13	1	5	A709-50WT2	1155	CVN 125
3		2	x112v	L6 x 6 x 7/8	8	11 5/16	A709-50WT2	1153	CVN 592
4									
5	173LB2	1		LEAN ON BRACING					359
6		2	x112k	PL 1/2 x 13	1	5	A709-50WT2	1155	CVN 63
7		1	x112w	L6 x 6 x 7/8	8	11 3/8	A709-50WT2	1153	CVN 296
8									
9	173LB3	1		LEAN ON BRACING					359
10		2	x112k	PL 1/2 x 13	1	5	A709-50WT2	1155	CVN 63
11		1	x112w	L6 x 6 x 7/8	8	11 3/8	A709-50WT2	1153	CVN 296
12									
13	173LB4	2		LEAN ON BRACING					717
14		4	x112k	PL 1/2 x 13	1	5	A709-50WT2	1155	CVN 125
15		2	x112p	L6 x 6 x 7/8	8	11 1/4	A709-50WT2	1153	CVN 592
16									
17	173LB5	3		LEAN ON BRACING					1075
18		6	x112k	PL 1/2 x 13	1	5	A709-50WT2	1155	CVN 188
19		3	x112p	L6 x 6 x 7/8	8	11 1/4	A709-50WT2	1153	CVN 887
20									
21	173LB6	1		LEAN ON BRACING					359
22		2	x112k	PL 1/2 x 13	1	5	A709-50WT2	1155	CVN 63
23		1	x112t	L6 x 6 x 7/8	8	11 5/16	A709-50WT2	1153	CVN 296

NOTES:
1. FOR GENERAL NOTES SEE SHEET GN101.
2. ALL MATERIAL A709-50WT2 (UN).
3. T2 - DENOTES MATERIAL SUBJECT TO CHARPY V-NOTCH TESTING.
4. FOR LEAN ON BRACING STANDARD DETAILS SEE X112.

NO.	DATE	REMARKS	BY
△			

REVISIONS

Veritas STEEL
2-EAU CLAIRE, WI 3-WAUSAU, WI 4-PALATKA, FL
IAS NCA 1605

STRUCTURE: CUY-010-1978R, OH-10 EASTBOUND OVER GCRTA BLUE AND GREEN LINES
LOCATION: CLEVELAND, OHIO CUYAHOGA COUNTY
PROJECT NO.: 17-3000
ENGINEER: MICHAEL BAKER INTERNATIONAL
CONTRACTOR: KOKOSING

ITEM: LEAN ON BRACING
SURFACE PREP.: SEE P101 OPEN HOLES: 1 1/16"Ø (U.N.O.)
PAINT: SEE P101

APPROVAL	DRAWN AM 06/03/19	SHEET NO.	PLANT	ORDER NO.
SHOP	CHECKED DP 07/10/19	173	3	317023A-37

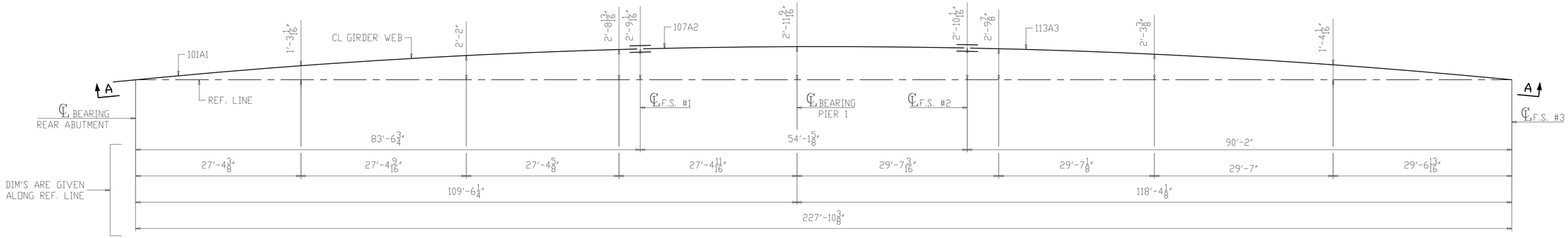

PLAN VIEW AT BOTTOM OF WEB

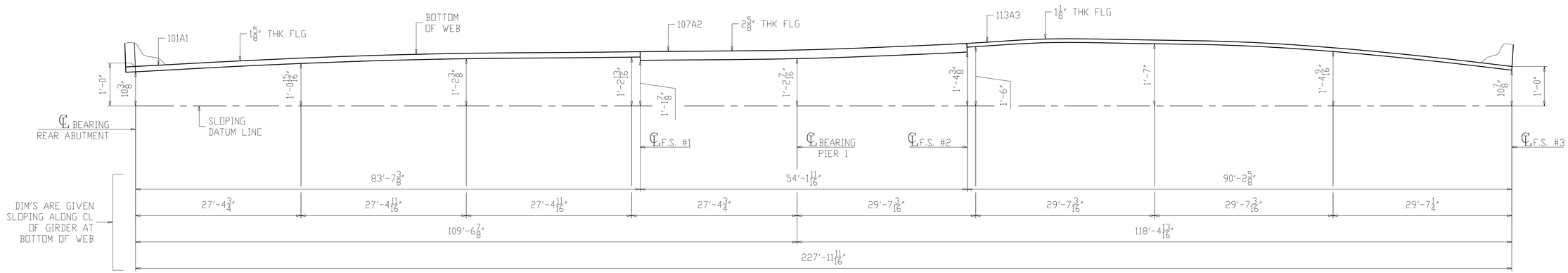

DEVELOPED VIEW A-A

(DIMENSIONS GIVEN ALONG CL WEB)

(GIRDER 101A1, 107A2 & 113A3)

NOTES:

1. FOR GENERAL NOTES SEE SHEET GN101.
2. ALL BLOCKING DIMENSIONS ARE GIVEN AT THE BOTTOM OF BOTTOM FLG (U.N.O.).
3. AT FIELD SPLICES BLOCKING DIMENSIONS ARE GIVEN TO THE BOTTOM OF THE THICKER FLG.

NO.	DATE	REMARKS	BY
△			

REVISIONS

Veritas STEEL

2-EAU CLAIRE, WI 3-WAUSAU, WI 4-PALATKA, FL

IAS TENCA 1605

STRUCTURE	CUY-010-1978R, OH-10 EASTBOUND OVER GCRTA BLUE AND GREEN LINES
LOCATION	CLEVELAND, OHIO CUYAHOGA COUNTY
PROJECT NO.	17-3000
ENGINEER	MICHAEL BAKER INTERNATIONAL
CONTRACTOR	KOKOSING
ITEM	BLOCKING DIAGRAM
SURFACE PREP.	SEE P101
OPEN HOLES	1 1/16"Ø (U.N.O.)
PAINT	SEE P101

APPROVAL	DRAWN AM 06/03/19	SHEET NO.	PLANT	ORDER NO.
SHOP	CHECKED DP 06/13/19	BD101	3	317023A

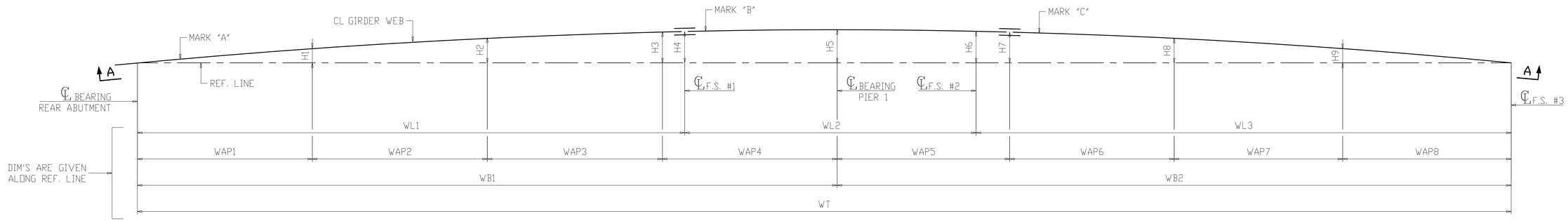

PLAN VIEW AT BOTTOM OF WEB

LINE	WT	WL1	WL2	WL3	H1	H2	H3	H4	H5	H6	H7	H8	H9	WB1	WB2	WAP1	WAP2	WAP3	WAP4	WAP5	WAP6	WAP7	WAP8
B	229'-5 7/16"	87'-10 1/8"	57'-10 3/8"	83'-8 15/16"	1'-4 1/8"	2'-3 9/16"	2'-10 1/4"	2'-10 5/16"	3'-0 1/4"	2'-9 3/4"	2'-9 5/8"	2'-2 7/8"	1'-3 5/8"	116'-10 9/16"	112'-6 7/8"	29'-2 7/16"	29'-2 5/8"	29'-2 3/4"	29'-2 3/4"	28'-1 7/8"	28'-1 13/16"	28'-1 11/16"	28'-1 1/2"
C	232'-10 13/16"	95'-11 1/2"	57'-7"	79'-4 5/16"	1'-5 3/8"	2'-5 3/8"	3'-0 1/16"	3'-0 3/8"	3'-1 3/8"	2'-10 3/16"	2'-9 3/4"	2'-2 7/8"	1'-3 7/16"	124'-4 7/16"	108'-6 3/8"	31'-0 7/8"	31'-1 1/16"	31'-1 1/4"	31'-1 1/4"	27'-1 3/4"	27'-1 11/16"	27'-1 9/16"	27'-1 3/8"
D	236'-2 3/4"	103'-10 7/8"	56'-10 9/16"	75'-5 5/16"	1'-6 11/16"	2'-7 1/4"	3'-1 13/16"	3'-2 1/4"	3'-2 5/16"	2'-10 3/8"	2'-9 3/4"	2'-2 11/16"	1'-3 1/4"	132'-0 1/8"	104'-2 5/8"	32'-11 3/4"	33'-0"	33'-0 3/16"	33'-0 3/16"	26'-0 13/16"	26'-0 3/4"	26'-0 5/8"	26'-0 7/16"
E	240'-7 1/4"	109'-6 15/16"	59'-1 5/16"	71'-11"	1'-8 1/8"	2'-9 3/8"	3'-3 13/16"	3'-4 3/16"	3'-3 7/16"	2'-10 7/8"	2'-9 15/16"	2'-2 13/16"	1'-3 3/16"	139'-9 5/8"	100'-9 5/8"	34'-11 1/16"	34'-11 3/8"	34'-11 9/16"	34'-11 5/8"	25'-2 9/16"	25'-2 1/2"	25'-2 3/8"	25'-2 3/16"
F	243'-11 1/4"	123'-2 1/8"	50'-10 3/8"	69'-10 3/4"	1'-9 1/2"	2'-11 5/16"	3'-5 1/2"	3'-5 13/16"	3'-3 15/16"	2'-10 13/16"	2'-10 3/16"	2'-2 1/2"	1'-2 7/8"	147'-9 1/16"	96'-2 3/16"	36'-10 7/8"	36'-11 1/4"	36'-11 7/16"	36'-11 1/2"	24'-0 3/4"	24'-0 5/8"	24'-0 1/2"	24'-0 5/16"

LINE	MARK "A"	MARK "B"	MARK "C"
B	102B1	108B2	114B3
C	103C1	109C2	115C3
D	104D1	110D2	116D3
E	105E1	111E2	117E3
F	106F1	112F2	118F3

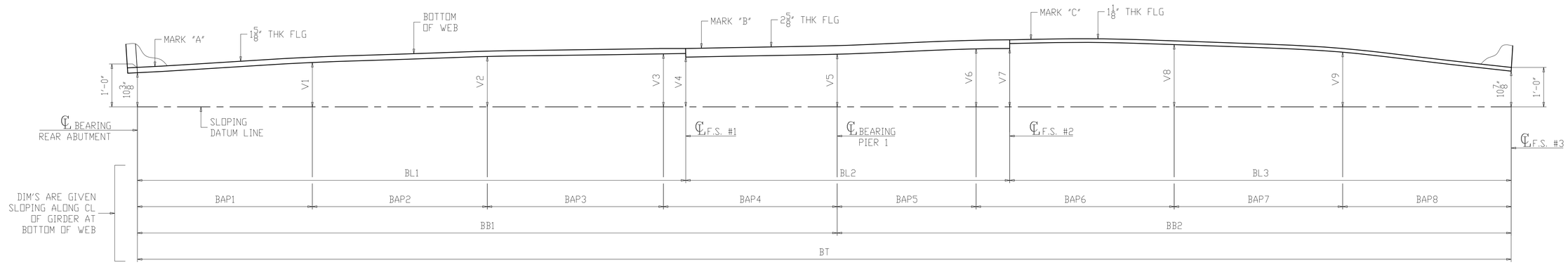

DEVELOPED VIEW A-A

(DIMENSIONS GIVEN ALONG CL WEB)

LINE	BT	BL1	BL2	BL3	V1	V2	V3	V4	V5	V6	V7	V8	V9	BB1	BB2	BAP1	BAP2	BAP3	BAP4	BAP5	BAP6	BAP7	BAP8
B	229'-6 3/4"	87'-10 3/4"	57'-10 7/16"	83'-9 9/16"	1'-1 1/2"	1'-3 5/16"	1'-4 1/8"	1'-3 1/8"	1'-4"	1'-5 11/16"	1'-5 3/4"	1'-7 5/16"	1'-4 1/2"	116'-11 3/16"	112'-7 9/16"	29'-2 13/16"	29'-2 13/16"	29'-2 13/16"	29'-2 3/4"	28'-1 7/8"	28'-1 7/8"	28'-1 7/8"	28'-1 15/16"
C	233'-0 5/16"	96'-0 3/16"	57'-7"	79'-5 1/8"	1'-2 1/2"	1'-5"	1'-6 1/16"	1'-5 1/8"	1'-6 1/8"	1'-7 1/16"	1'-7 1/16"	1'-7 7/8"	1'-4 5/8"	124'-5 3/16"	108'-7 1/8"	31'-1 5/16"	31'-1 5/16"	31'-1 5/16"	31'-1 1/4"	27'-1 13/16"	27'-1 3/4"	27'-1 3/4"	27'-1 13/16"
D	236'-4 5/16"	103'-11 5/8"	56'-10 5/8"	75'-6 1/16"	1'-3 7/8"	1'-7 1/8"	1'-8 5/16"	1'-7 7/16"	1'-8 1/16"	1'-8 1/4"	1'-8 3/16"	1'-8 7/16"	1'-4 7/8"	132'-0 7/8"	104'-3 7/16"	33'-0 3/16"	33'-0 1/4"	33'-0 1/4"	33'-0 3/16"	26'-0 7/8"	26'-0 7/8"	26'-0 7/8"	26'-0 13/16"
E	240'-8 15/16"	109'-7 3/4"	59'-1 5/16"	71'-11 7/8"	1'-5 5/8"	1'-9 15/16"	1'-11 1/4"	1'-10 5/16"	1'-10"	1'-9 1/2"	1'-9 5/16"	1'-9 3/16"	1'-5 1/8"	139'-10 1/2"	100'-10 7/16"	34'-11 5/8"	34'-11 5/8"	34'-11 5/8"	34'-11 5/8"	25'-2 5/8"	25'-2 5/8"	25'-2 5/8"	25'-2 9/16"
F	244'-1 1/8"	123'-3"	50'-10 1/2"	69'-11 5/8"	1'-7 15/16"	2'-1 1/8"	2'-2"	2'-0 5/8"	1'-11 7/16"	1'-10 7/16"	1'-10 1/4"	1'-9 5/8"	1'-5 3/8"	147'-10 1/16"	96'-3 1/16"	36'-11 1/2"	36'-11 1/2"	36'-11 1/2"	36'-11 9/16"	24'-0 3/4"	24'-0 3/4"	24'-0 3/4"	24'-0 13/16"

LINE	MARK "A"	MARK "B"	MARK "C"
B	102B1	108B2	114B3
C	103C1	109C2	115C3
D	104D1	110D2	116D3
E	105E1	111E2	117E3
F	106F1	112F2	118F3

NOTES:
1. FOR GENERAL NOTES SEE SHEET GN101.
2. ALL BLOCKING DIMENSIONS ARE GIVEN AT THE BOTTOM OF BOTTOM FLG (U.N.O.).
3. AT FIELD SPLICES BLOCKING DIMENSIONS ARE GIVEN TO THE BOTTOM OF THE THICKER FLG.

NO.	DATE	REMARKS	BY

REVISIONS

Veritas STEEL
2-EAU CLAIRE, WI 3-WAUSAU, WI 4-PALATKA, FL
TENCA 1605

STRUCTURE: CUY-010-1978R, OH-10 EASTBOUND OVER GCRTA BLUE AND GREEN LINES
LOCATION: CLEVELAND, OHIO CUYAHOGA COUNTY
PROJECT NO.: 17-3000
ENGINEER: MICHAEL BAKER INTERNATIONAL
CONTRACTOR: KOKOSING

ITEM: BLOCKING DIAGRAM
SURFACE PREP.: SEE P101 OPEN HOLES: 1 1/16"Ø (U.N.O.)
PAINT: SEE P101

APPROVAL	DRAWN AM 06/13/19	SHEET NO.	PLANT	ORDER NO.
SHOP	CHECKED DP 06/20/19	BD102	3	317023A

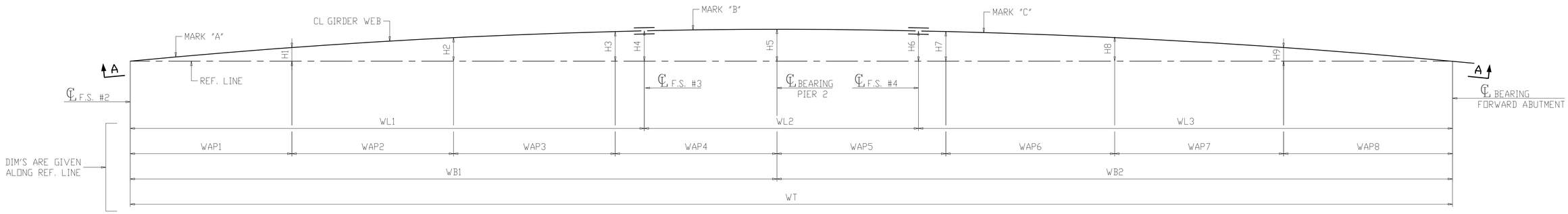

PLAN VIEW AT BOTTOM OF WEB

LINE	WT	WL1	WL2	WL3	H1	H2	H3	H4	H5	H6	H7	H8	H9	WB1	WB2	WAP1	WAP2	WAP3	WAP4	WAP5	WAP6	WAP7	WAP8
A	231'-11 1/8"	90'-11 13/16"	48'-1 3/8"	93'-7 15/16"	1'-3 13/16"	2'-3 1/4"	2'-10 1/4"	2'-11 1/16"	3'-0 7/8"	2'-11 9/16"	2'-10 7/8"	2'-4 1/16"	1'-4 7/16"	113'-5 1/8"	118'-6"	28'-4 1/16"	28'-4 1/4"	28'-4 3/8"	28'-4 7/16"	29'-7 11/16"	29'-7 5/8"	29'-7 7/16"	29'-7 1/4"
B	225'-8 5/16"	83'-8 7/8"	49'-10 9/16"	92'-0 7/8"	1'-2 7/8"	2'-1 11/16"	2'-8 7/16"	2'-8 3/4"	2'-11 1/16"	2'-9 15/16"	2'-9 3/8"	2'-2 15/16"	1'-3 13/16"	108'-9 5/8"	116'-10 11/16"	27'-2 3/16"	27'-2 3/8"	27'-2 1/2"	27'-2 9/16"	29'-2 13/16"	29'-2 13/16"	29'-2 5/8"	29'-2 7/16"
C	219'-8"	79'-4 1/2"	49'-7 11/16"	90'-7 13/16"	1'-2"	2'-0 1/4"	2'-6 11/16"	2'-6 7/8"	2'-9 5/16"	2'-8 3/8"	2'-7 7/8"	2'-1 7/8"	1'-3 1/4"	104'-4 7/8"	115'-3 1/8"	26'-1"	26'-1 3/16"	26'-1 5/16"	26'-1 3/8"	28'-9 15/16"	28'-9 7/8"	28'-9 3/4"	28'-9 9/16"

LINE	MARK "A"	MARK "B"	MARK "C"
A	113A3	119A4	125A5
B	114B3	120B4	126B5
C	115C3	121C4	127C5

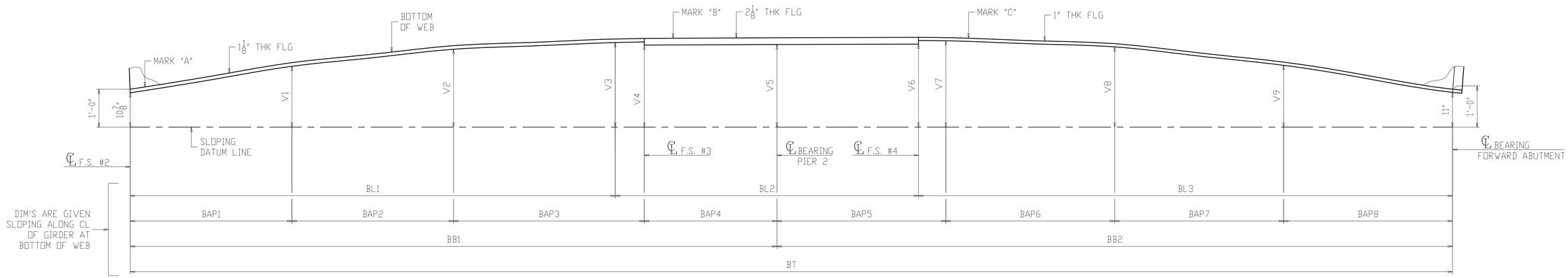

DEVELOPED VIEW A-A

(DIMENSIONS GIVEN ALONG CL WEB)

LINE	BT	BL1	BL2	BL3	V1	V2	V3	V4	V5	V6	V7	V8	V9	BB1	BB2	BAP1	BAP2	BAP3	BAP4	BAP5	BAP6	BAP7	BAP8
A	232'-0 3/4"	90'-2 5/8"	48'-1 3/8"	93'-8 3/4"	1'-7 1/4"	2'-0 5/8"	2'-2 3/4"	2'-11 15/16"	2'-2 1/8"	2'-2 1/4"	2'-3 5/16"	2'-1 3/8"	1'-7 9/16"	113'-5 7/8"	118'-6 7/8"	28'-4 1/2"	28'-4 7/16"	28'-4 7/16"	28'-4 1/2"	29'-7 3/4"	29'-7 11/16"	29'-7 11/16"	29'-7 3/4"
B	225'-9 3/4"	83'-9 5/8"	49'-10 9/16"	92'-1 9/16"	1'-6 7/16"	1'-11 1/4"	2'-1 7/16"	2'-0 9/16"	2'-0 15/16"	2'-0 15/16"	2'-1 15/16"	1'-11 9/16"	1'-6 1/16"	108'-10 3/8"	116'-11 3/8"	27'-2 9/16"	27'-2 5/8"	27'-2 5/8"	27'-2 9/16"	29'-2 13/16"	29'-2 7/8"	29'-2 7/8"	29'-2 13/16"
C	219'-9 5/16"	79'-5 1/16"	49'-7 3/4"	90'-8 1/2"	1'-5 11/16"	1'-10 1/8"	2'-0 3/16"	1'-11 1/4"	1'-11 9/16"	1'-11 5/16"	2'-0 5/16"	1'-10"	1'-5 3/16"	104'-5 9/16"	115'-3 3/4"	26'-1 3/8"	26'-1 3/8"	26'-1 3/8"	26'-1 7/16"	28'-9 15/16"	28'-9 15/16"	28'-9 15/16"	28'-9 15/16"

LINE	MARK "A"	MARK "B"	MARK "C"
A	113A3	119A4	125A5
B	114B3	120B4	126B5
C	115C3	121C4	127C5

NOTES:
1. FOR GENERAL NOTES SEE SHEET GN101.
2. ALL BLOCKING DIMENSIONS ARE GIVEN AT THE BOTTOM OF BOTTOM FLG (U.N.O.).
3. AT FIELD SPLICES BLOCKING DIMENSIONS ARE GIVEN TO THE BOTTOM OF THE THICKER FLG.

NO.	DATE	REMARKS	BY

REVISIONS

Veritas STEEL
2-EAU CLAIRE, WI 3-WAUSAU, WI 4-PALATKA, FL
IAS TENCA 1605

STRUCTURE: CUY-010-1978R, OH-10 EASTBOUND OVER GCRTA BLUE AND GREEN LINES
LOCATION: CLEVELAND, OHIO CUYAHOGA COUNTY
PROJECT NO.: 17-3000
ENGINEER: MICHAEL BAKER INTERNATIONAL
CONTRACTOR: KOKOSING

ITEM: BLOCKING DIAGRAM
SURFACE PREP.: SEE P101 OPEN HOLES: 1 1/16"Ø (U.N.O.)
PAINT: SEE P101

APPROVAL	DRAWN AM 06/13/19	SHEET NO.	PLANT	ORDER NO.
SHOP	CHECKED DP 06/20/19	BD103	3	317023A

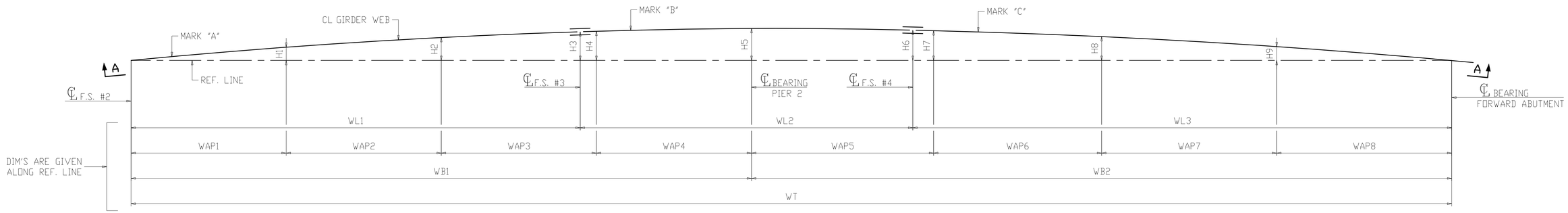

PLAN VIEW AT BOTTOM OF WEB

LINE	WT	WL1	WL2	WL3	H1	H2	H3	H4	H5	H6	H7	H8	H9	WB1	WB2	WAP1	WAP2	WAP3	WAP4	WAP5	WAP6	WAP7	WAP8
A	214'-3 1/8"	75'-5 7/16"	51'-4 9/16"	87'-5 1/8"	1'-1 1/4"	1'-10 15/16"	2'-5 1/8"	2'-5 3/16"	2'-7 13/16"	2'-6 7/8"	2'-6 5/8"	2'-0 7/8"	1'-2 11/16"	100'-7 7/8"	113'-7 1/4"	25'-1 3/4"	25'-1 15/16"	25'-2 1/16"	25'-2 1/8"	28'-4 15/16"	28'-4 7/8"	28'-4 13/16"	28'-4 5/8"
B	208'-2 15/16"	71'-11 1/4"	49'-6 1/2"	86'-9 3/16"	1'-0 3/8"	1'-9 9/16"	2'-3 7/16"	2'-3 1/2"	2'-6 1/8"	2'-5 1/2"	2'-5 3/16"	1'-11 13/16"	1'-2 1/8"	96'-3 13/16"	111'-11 1/8"	24'-0 13/16"	24'-0 15/16"	24'-1"	24'-1 1/16"	27'-11 15/16"	27'-11 7/8"	27'-11 3/4"	27'-11 9/16"
C	204'-9 5/8"	69'-11 1/8"	47'-5 5/16"	87'-5 3/16"	1'-0"	1'-8 15/16"	2'-2 1/2"	2'-2 11/16"	2'-5 5/16"	2'-4 13/16"	2'-4 3/8"	1'-11 3/16"	1'-1 11/16"	94'-6 7/8"	110'-2 3/4"	23'-7 9/16"	23'-7 11/16"	23'-7 3/4"	23'-7 7/8"	27'-6 13/16"	27'-6 3/4"	27'-6 11/16"	27'-6 1/2"

LINE	MARK "A"	MARK "B"	MARK "C"
D	116D3	122D4	128D5
E	117E3	123E4	129E5
F	118F3	124F4	130F5

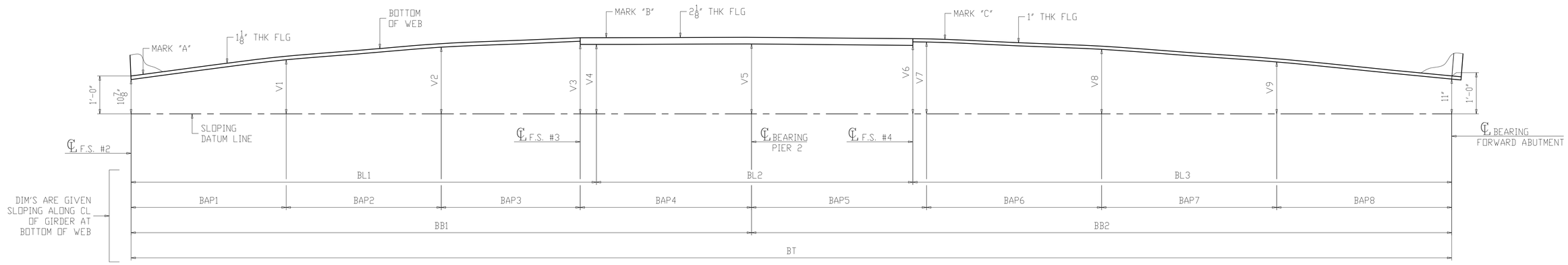

DEVELOPED VIEW A-A

(DIMENSIONS GIVEN ALONG CL WEB)

LINE	BT	BL1	BL2	BL3	V1	V2	V3	V4	V5	V6	V7	V8	V9	BB1	BB2	BAP1	BAP2	BAP3	BAP4	BAP5	BAP6	BAP7	BAP8
D	214'-4 5/16"	75'-6 1/16"	51'-4 9/16"	87'-5 11/16"	1'-5 1/8"	1'-9 1/8"	1'-10"	1'-10"	1'-10 1/8"	1'-9 11/16"	1'-10 3/4"	1'-8 7/16"	1'-4 7/16"	100'-8 1/2"	113'-7 13/16"	25'-2 1/8"	25'-2 1/8"	25'-2 1/8"	25'-2 1/8"	28'-4 15/16"	28'-4 15/16"	28'-4 15/16"	28'-5"
E	208'-4"	71'-11 13/16"	49'-6 1/2"	86'-9 11/16"	1'-4 1/2"	1'-8"	1'-8 1/2"	1'-8 1/2"	1'-8 7/16"	1'-8"	1'-9"	1'-7 1/16"	1'-3 13/16"	96'-4 3/8"	111'-11 5/8"	24'-1 1/16"	24'-1 1/8"	24'-1 1/8"	24'-1 1/16"	27'-11 7/8"	27'-11 15/16"	27'-11 15/16"	27'-11 7/8"
F	204'-10 11/16"	69'-11 5/8"	47'-5 3/8"	87'-5 11/16"	1'-4 1/16"	1'-7 5/16"	1'-7 5/16"	1'-7 5/16"	1'-6 7/8"	1'-6 7/16"	1'-7 3/8"	1'-6 1/4"	1'-3 1/2"	94'-7 7/16"	110'-3 1/4"	23'-7 7/8"	23'-7 7/8"	23'-7 7/8"	23'-7 13/16"	27'-6 13/16"	27'-6 13/16"	27'-6 13/16"	27'-6 13/16"

LINE	MARK "A"	MARK "B"	MARK "C"
D	116D3	122D4	128D5
E	117E3	123E4	129E5
F	118F3	124F4	130F5

NOTES:
1. FOR GENERAL NOTES SEE SHEET GN101.
2. ALL BLOCKING DIMENSIONS ARE GIVEN AT THE BOTTOM OF BOTTOM FLG (U.N.O.).
3. AT FIELD SPLICES BLOCKING DIMENSIONS ARE GIVEN TO THE BOTTOM OF THE THICKER FLG.

NO.	DATE	REMARKS	BY

REVISIONS

Veritas STEEL
2-EAU CLAIRE, WI 3-WAUSAU, WI 4-PALATKA, FL
TENCA 1605

STRUCTURE: CUY-010-1978R, OH-10 EASTBOUND OVER GCRTA BLUE AND GREEN LINES
LOCATION: CLEVELAND, OHIO CUYAHOGA COUNTY
PROJECT NO.: 17-3000
ENGINEER: MICHAEL BAKER INTERNATIONAL
CONTRACTOR: KOKOSING

ITEM: BLOCKING DIAGRAM
SURFACE PREP.: SEE P101 OPEN HOLES: 1 1/16"Ø (U.N.O.)
PAINT: SEE P101

APPROVAL	DRAWN AM 06/13/19	SHEET NO.	PLANT	ORDER NO.
SHOP	CHECKED DP 06/20/19	BD104	3	317023A

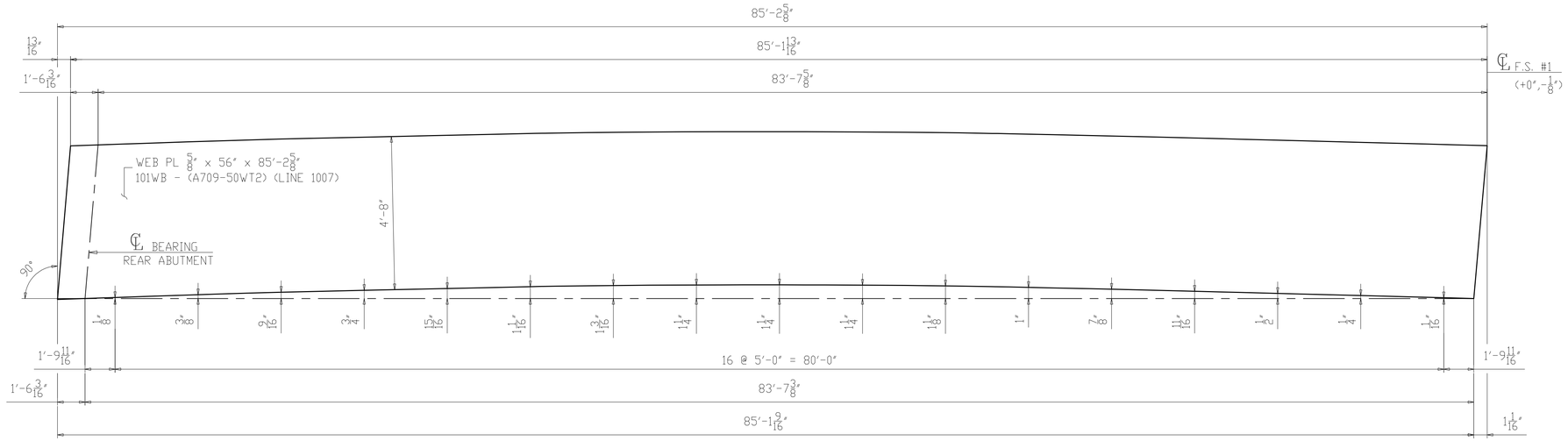

CAMBER DIAGRAM FOR 101A1
(DEVELOPED)

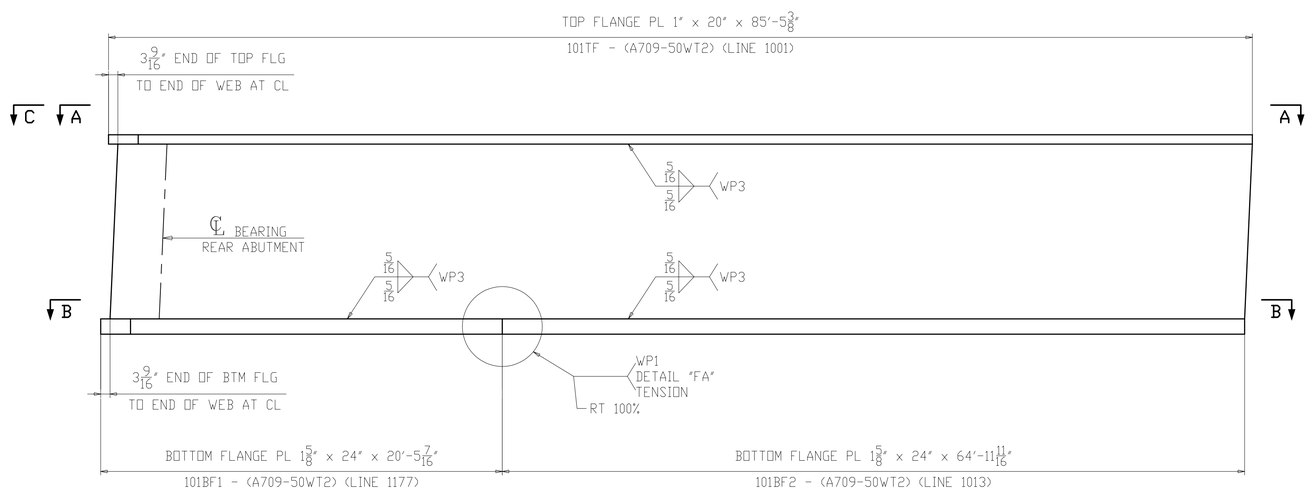

FLANGE DIAGRAM FOR 101A1

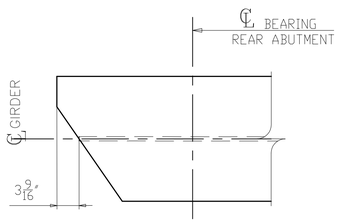

SECTION C
(SHOWN AT TOP)
(SIMILAR AT BOTTOM)

NOTES:
1. FOR GENERAL NOTES & WELD DETAILS "WB" & "FA" SEE SHEET GN101.
2. ALL MATERIAL A709-50WT2 (UN)
3. T2 - DENOTES MATERIAL SUBJECT TO CHARPY V-NOTCH TEST
- CVN = 15 FT-LBS @ 40°F "H" FREQ FOR THICKNESS UP 2".
- CVN = 20 FT-LBS @ 40°F "H" FREQ FOR THICKNESS OVER 2".

NO.	DATE	REMARKS	BY
△			

REVISIONS

Veritas STEEL
2-EAU CLAIRE, WI 3-WAUSAU, WI 4-PALATKA, FL
IAENCA 1605

STRUCTURE	CUY-010-1978R, OH-10 EASTBOUND OVER GCRTA BLUE AND GREEN LINES
LOCATION	CLEVELAND, OHIO CUYAHOGA COUNTY
PROJECT NO.	17-3000
ENGINEER	MICHAEL BAKER INTERNATIONAL
CONTRACTOR	KOKOSING
ITEM	CAMBER & FLANGES DIAGRAM
SURFACE PREP.	SEE P101 OPEN HOLES 1 1/16"Ø (U.N.O.)
PAINT	SEE P101

APPROVAL	DRAWN AM 05/10/19	SHEET NO.	PLANT	ORDER NO.
SHOP	CHECKED DP 06/05/19	BG101AB	3	317023A-20

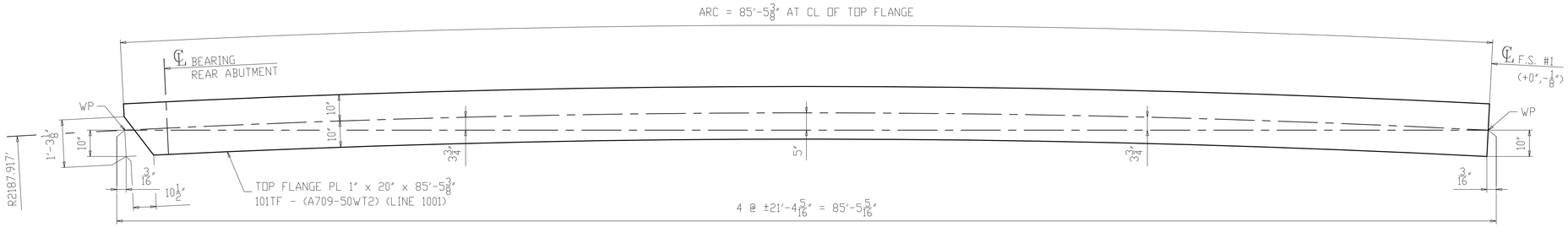

SECTION A-A
(TOP FLANGE)

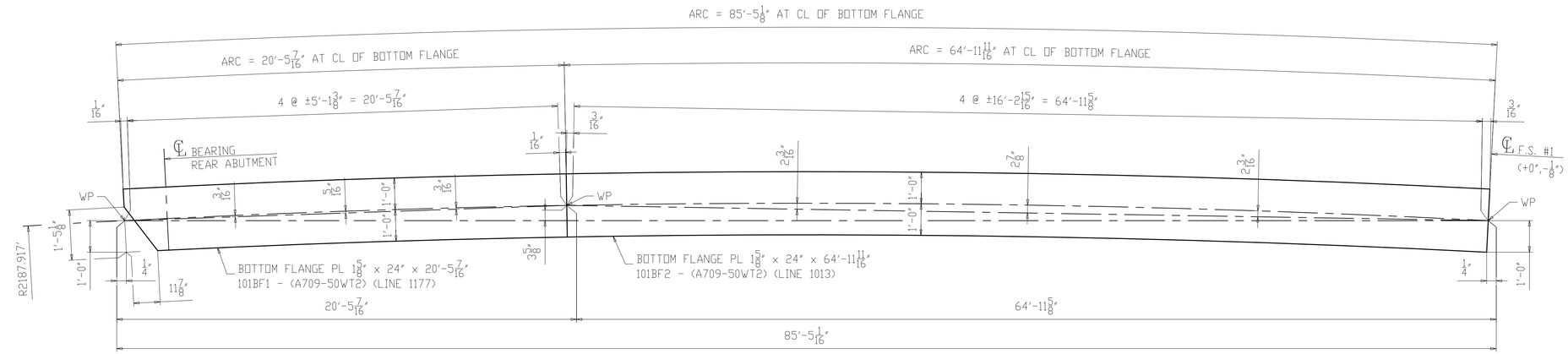

SECTION B-B
(BOTTOM FLANGE)

NOTES:
1. FOR GENERAL NOTES & WELD DETAILS "WB" & "FA" SEE SHEET GN101.
2. ALL MATERIAL A709-50WT2 (UN)
3. T2 - DENOTES MATERIAL SUBJECT TO CHARPY V-NOTCH TEST
- CVN = 15 FT-LBS @ 40°F "H" FREQ FOR THICKNESS UP 2".
- CVN = 20 FT-LBS @ 40°F "H" FREQ FOR THICKNESS OVER 2".

NO.	DATE	REMARKS	BY
△			

REVISIONS

Veritas STEEL
2-EAU CLAIRE, WI 3-WAUSAU, WI 4-PALATKA, FL
IENCA 1605

STRUCTURE	CUY-010-1978R, OH-10 EASTBOUND OVER GCRTA BLUE AND GREEN LINES
LOCATION	CLEVELAND, OHIO CUYAHOGA COUNTY
PROJECT NO.	17-3000
ENGINEER	MICHAEL BAKER INTERNATIONAL
CONTRACTOR	KOKOSING
ITEM	FLANGE DIAGRAM
SURFACE PREP.	SEE P101 OPEN HOLES 1 1/16"Ø (U.N.O.)
PAINT	SEE P101

APPROVAL	DRAWN AM 05/10/19	SHEET NO.	PLANT	ORDER NO.
SHOP	CHECKED DP 06/05/19	BG101B	3	317023A-20

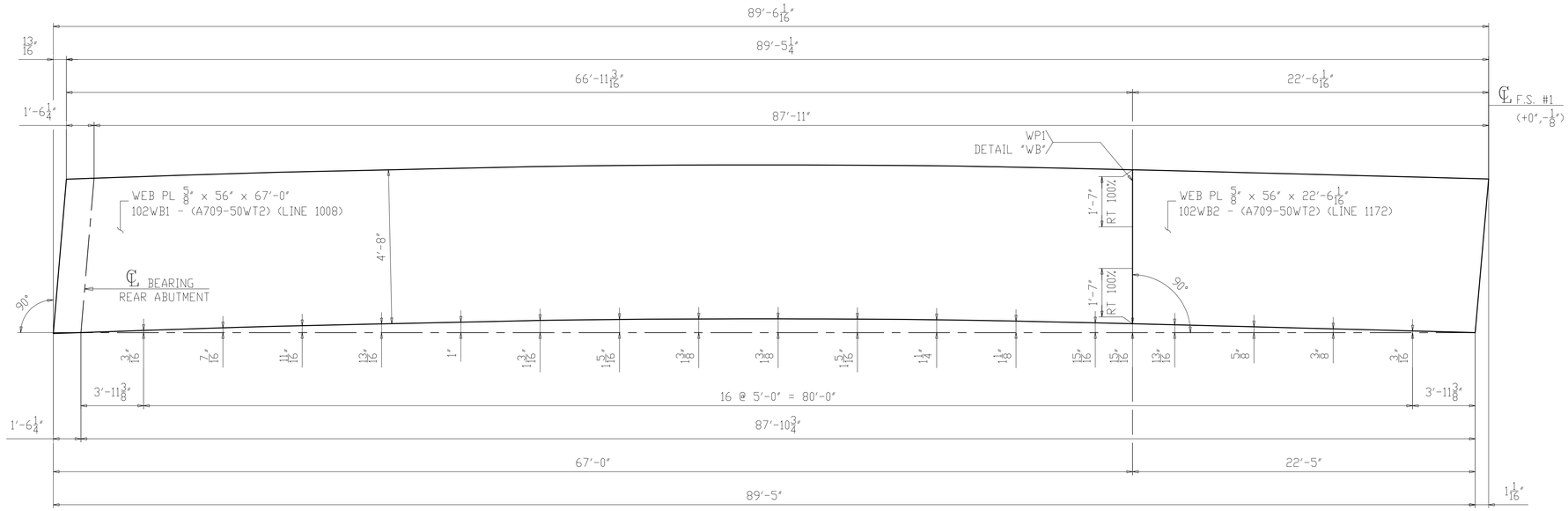

CAMBER DIAGRAM FOR 102B1
(DEVELOPED)

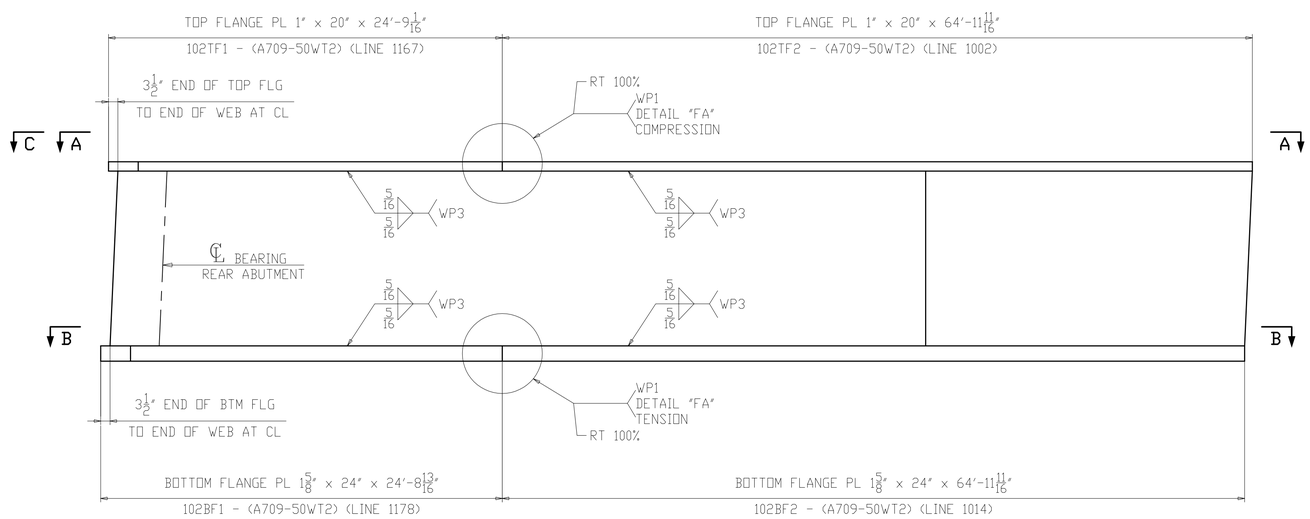

FLANGE DIAGRAM FOR 102B1

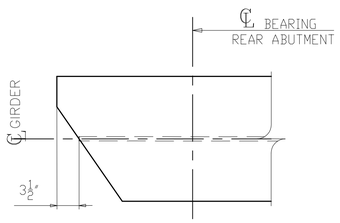

SECTION C
(SHOWN AT TOP)
(SIMILAR AT BOTTOM)

NOTES:
1. FOR GENERAL NOTES & WELD DETAILS "WB" & "FA" SEE SHEET GN101.
2. ALL MATERIAL A709-50WT2 (UN)
3. T2 - DENOTES MATERIAL SUBJECT TO CHARPY V-NOTCH TEST
- CVN = 15 FT-LBS @ 40°F "H" FREQ FOR THICKNESS UP 2".
- CVN = 20 FT-LBS @ 40°F "H" FREQ FOR THICKNESS OVER 2".

NO.	DATE	REMARKS	BY

REVISIONS

Veritas STEEL
2-EAU CLAIRE, WI 3-WAUSAU, WI 4-PALATKA, FL
IAENCA 1605

STRUCTURE	CUY-010-1978R, OH-10 EASTBOUND OVER GCRTA BLUE AND GREEN LINES
LOCATION	CLEVELAND, OHIO CUYAHOGA COUNTY
PROJECT NO.	17-3000
ENGINEER	MICHAEL BAKER INTERNATIONAL
CONTRACTOR	KOKOSING
ITEM	CAMBER & FLANGES DIAGRAM
SURFACE PREP.	SEE P101 OPEN HOLES 1 1/16"Ø (U.N.O.)
PAINT	SEE P101

APPROVAL	DRAWN AM 05/10/19	SHEET NO.	PLANT	ORDER NO.
SHOP	CHECKED DP 06/05/19	BG102AB	3	317023A-20

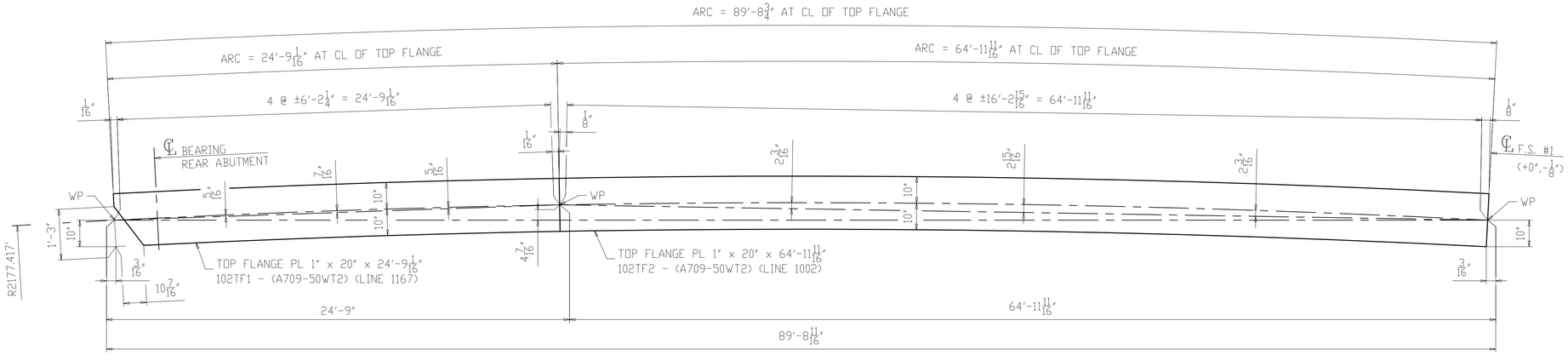

SECTION A-A
(TOP FLANGE)

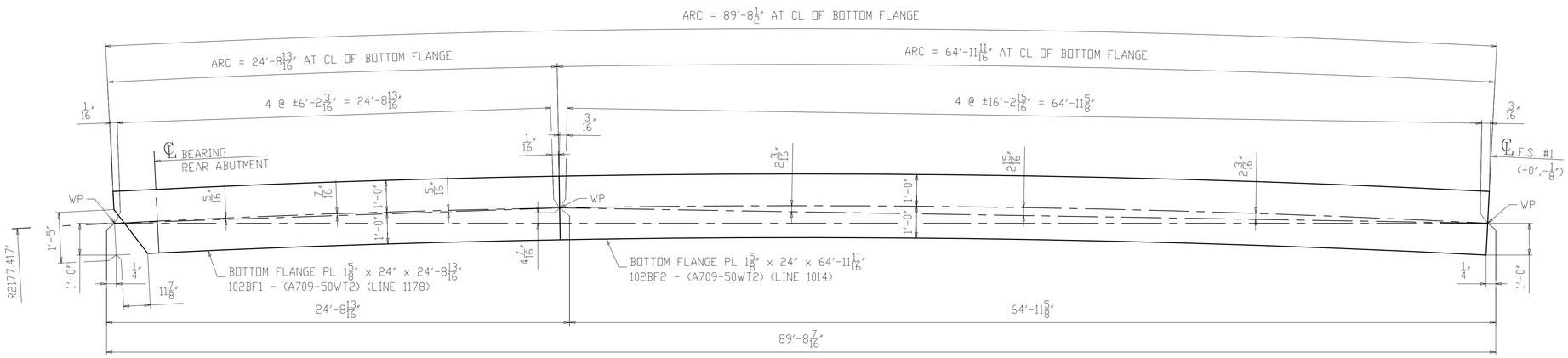

SECTION B-B
(BOTTOM FLANGE)

NOTES:
1. FOR GENERAL NOTES & WELD DETAILS "WB" & "FA" SEE SHEET GN101.
2. ALL MATERIAL A709-50WT2 (UN)
3. T2 - DENOTES MATERIAL SUBJECT TO CHARPY V-NOTCH TEST
- CVN = 15 FT-LBS @ 40°F "H" FREQ FOR THICKNESS UP 2".
- CVN = 20 FT-LBS @ 40°F "H" FREQ FOR THICKNESS OVER 2".

NO.	DATE	REMARKS	BY

REVISIONS

Veritas STEEL
2-EAU CLAIRE, WI 3-WAUSAU, WI 4-PALATKA, FL
TENCA 1605

STRUCTURE	CUY-010-1978R, OH-10 EASTBOUND OVER GCRTA BLUE AND GREEN LINES
LOCATION	CLEVELAND, OHIO CUYAHOGA COUNTY
PROJECT NO.	17-3000
ENGINEER	MICHAEL BAKER INTERNATIONAL
CONTRACTOR	KOKOSING
ITEM	FLANGE DIAGRAM
SURFACE PREP.	SEE P101 OPEN HOLES 1 1/16"Ø (U.N.O.)
PAINT	SEE P101

APPROVAL	DRAWN AM 05/10/19	SHEET NO.	PLANT	ORDER NO.
SHOP	CHECKED DP 06/05/19	BG102B	3	317023A-20

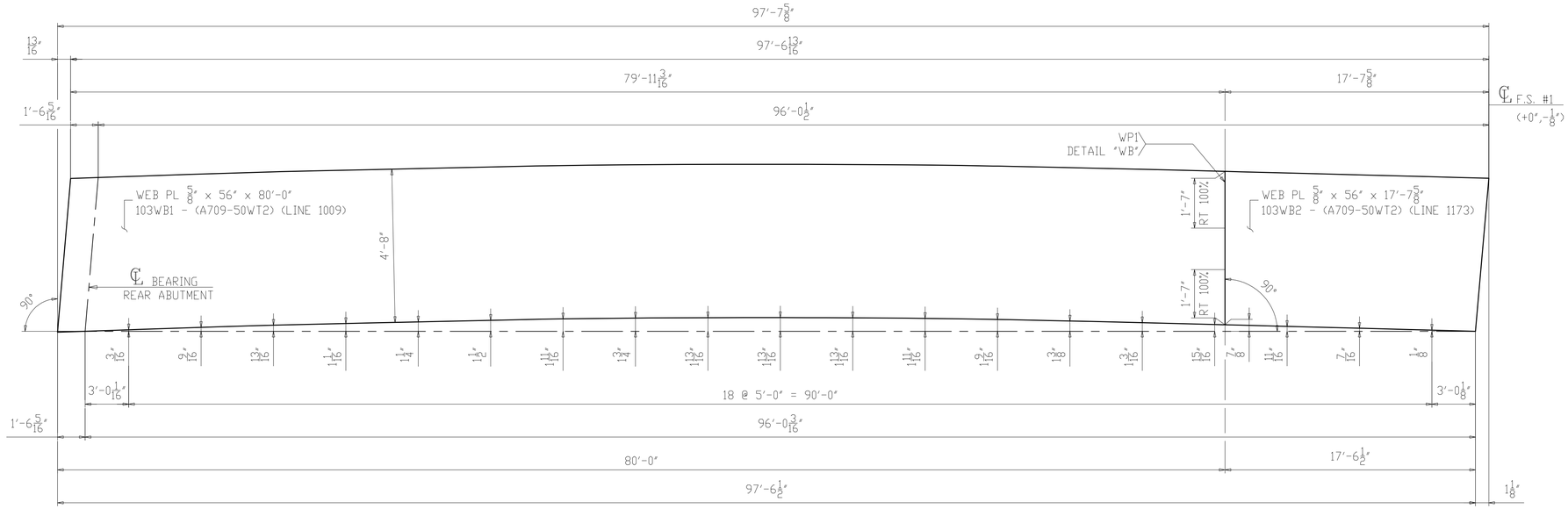

CAMBER DIAGRAM FOR 103C1
(DEVELOPED)

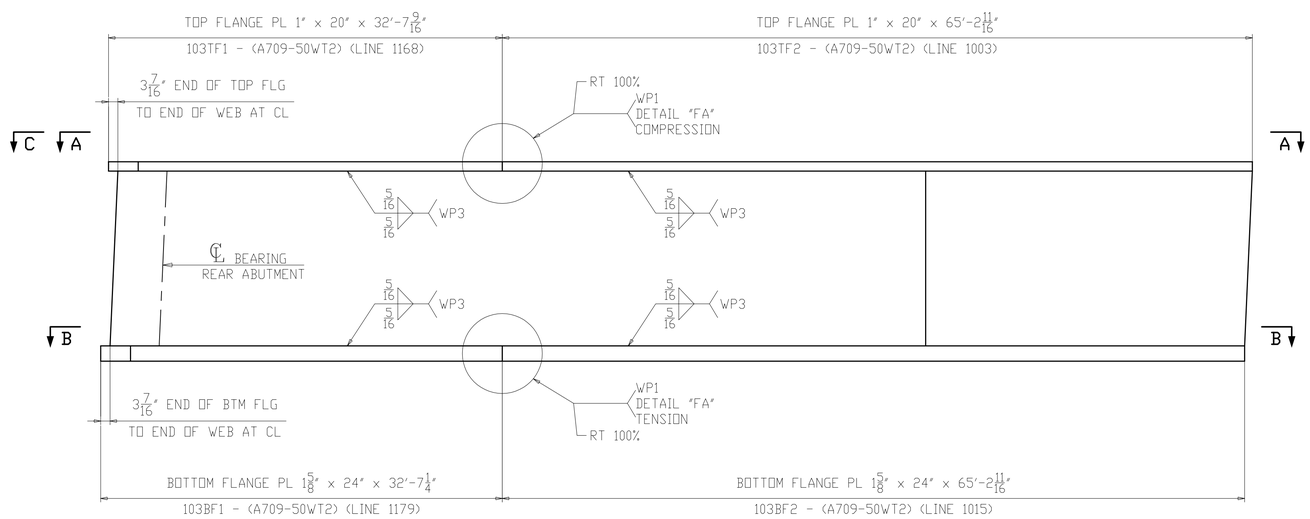

FLANGE DIAGRAM FOR 103C1

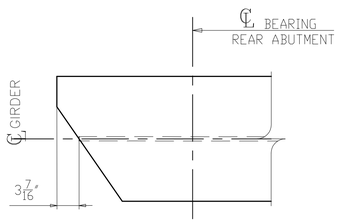

SECTION C
(SHOWN AT TOP)
(SIMILAR AT BOTTOM)

NOTES:
1. FOR GENERAL NOTES & WELD DETAILS "WB" & "FA" SEE SHEET GN101.
2. ALL MATERIAL A709-50WT2 (UN)
3. T2 - DENOTES MATERIAL SUBJECT TO CHARPY V-NOTCH TEST
- CVN = 15 FT-LBS @ 40°F "H" FREQ FOR THICKNESS UP 2".
- CVN = 20 FT-LBS @ 40°F "H" FREQ FOR THICKNESS OVER 2".

NO.	DATE	REMARKS	BY

REVISIONS

Veritas STEEL
2-EAU CLAIRE, WI 3-WAUSAU, WI 4-PALATKA, FL
TENCA 1605

STRUCTURE	CUY-010-1978R, OH-10 EASTBOUND OVER GCRTA BLUE AND GREEN LINES
LOCATION	CLEVELAND, OHIO CUYAHOGA COUNTY
PROJECT NO.	17-3000
ENGINEER	MICHAEL BAKER INTERNATIONAL
CONTRACTOR	KOKOSING
ITEM	CAMBER & FLANGES DIAGRAM
SURFACE PREP.	SEE P101 OPEN HOLES 1 1/16"Ø (U.N.O.)
PAINT	SEE P101

APPROVAL	DRAWN AM 05/10/19	SHEET NO.	PLANT	ORDER NO.
SHOP	CHECKED DP 06/05/19	BG103AB	3	317023A-20

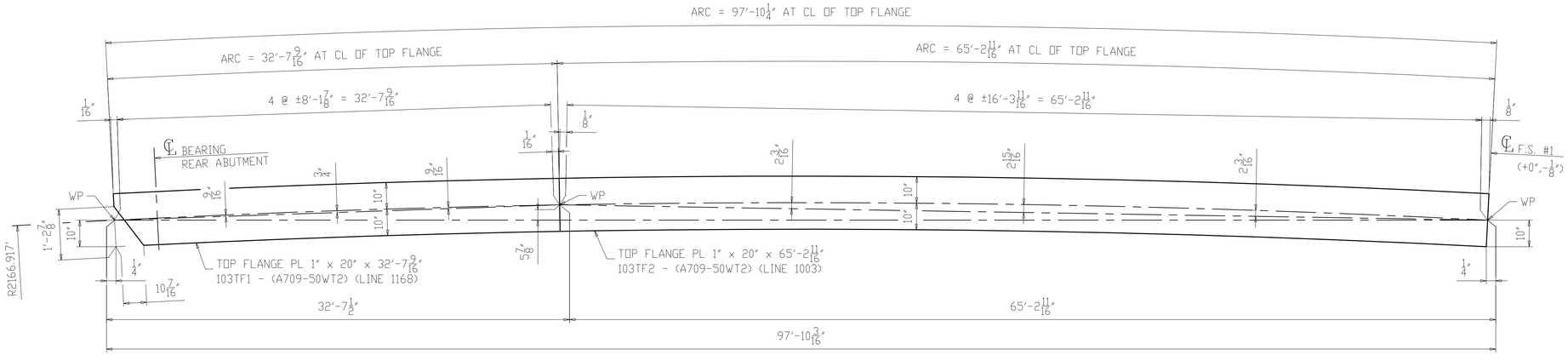

SECTION A-A
(TOP FLANGE)

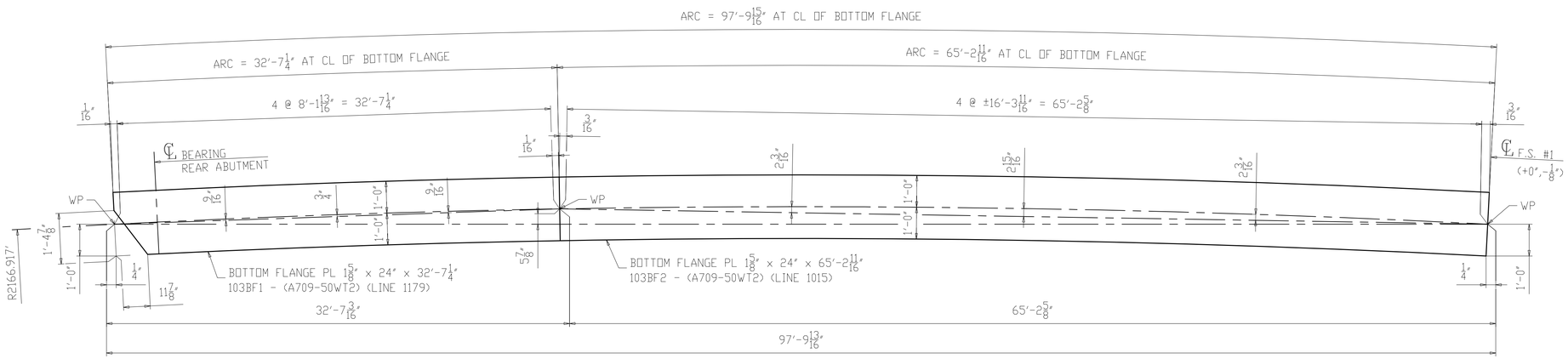

SECTION B-B
(BOTTOM FLANGE)

NOTES:
1. FOR GENERAL NOTES & WELD DETAILS "WB" & "FA" SEE SHEET GN101.
2. ALL MATERIAL A709-50WT2 (UN)
3. T2 - DENOTES MATERIAL SUBJECT TO CHARPY V-NOTCH TEST
- CVN = 15 FT-LBS @ 40°F "H" FREQ FOR THICKNESS UP 2".
- CVN = 20 FT-LBS @ 40°F "H" FREQ FOR THICKNESS OVER 2".

NO.	DATE	REMARKS	BY
△			

REVISIONS

Veritas STEEL
2-EAU CLAIRE, WI 3-WAUSAU, WI 4-PALATKA, FL
IENCA 1605

STRUCTURE	CUY-010-1978R, OH-10 EASTBOUND OVER GCRTA BLUE AND GREEN LINES
LOCATION	CLEVELAND, OHIO CUYAHOGA COUNTY
PROJECT NO.	17-3000
ENGINEER	MICHAEL BAKER INTERNATIONAL
CONTRACTOR	KOKOSING
ITEM	FLANGE DIAGRAM
SURFACE PREP.	SEE P101
OPEN HOLES	1 1/16"Ø (U.N.O.)
PAINT	SEE P101

APPROVAL	DRAWN AM 05/10/19	SHEET NO.	PLANT	ORDER NO.
SHOP	CHECKED DP 06/05/19	BG103B	3	317023A-20

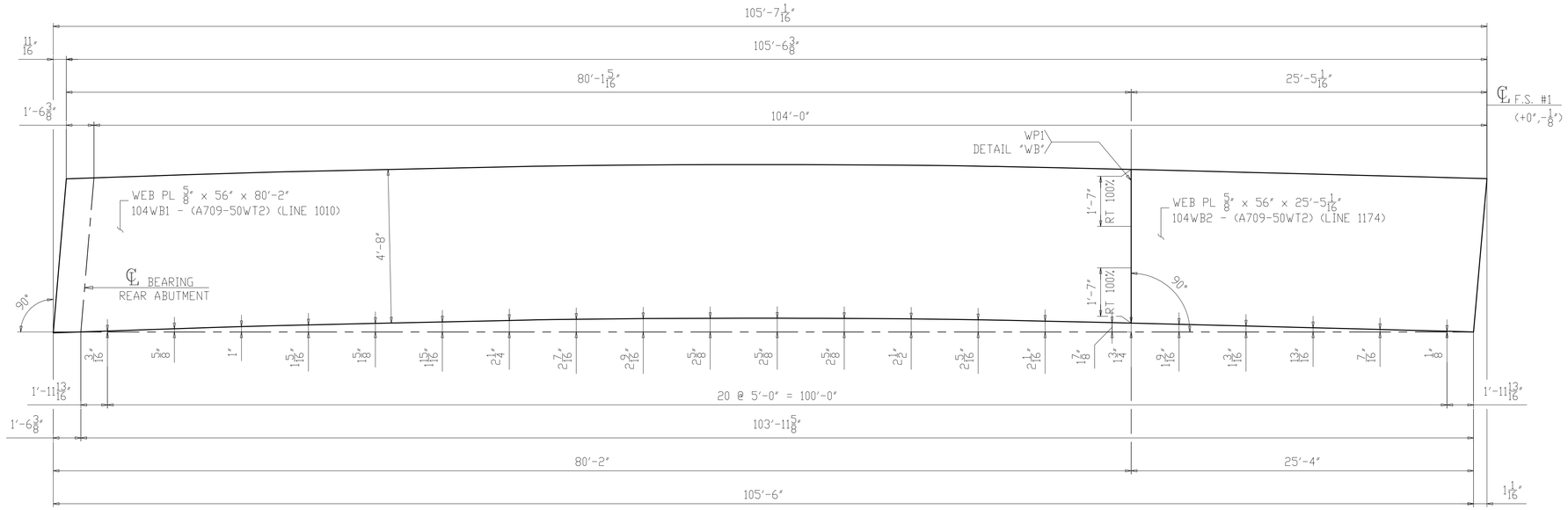

CAMBER DIAGRAM FOR 104D1
(DEVELOPED)

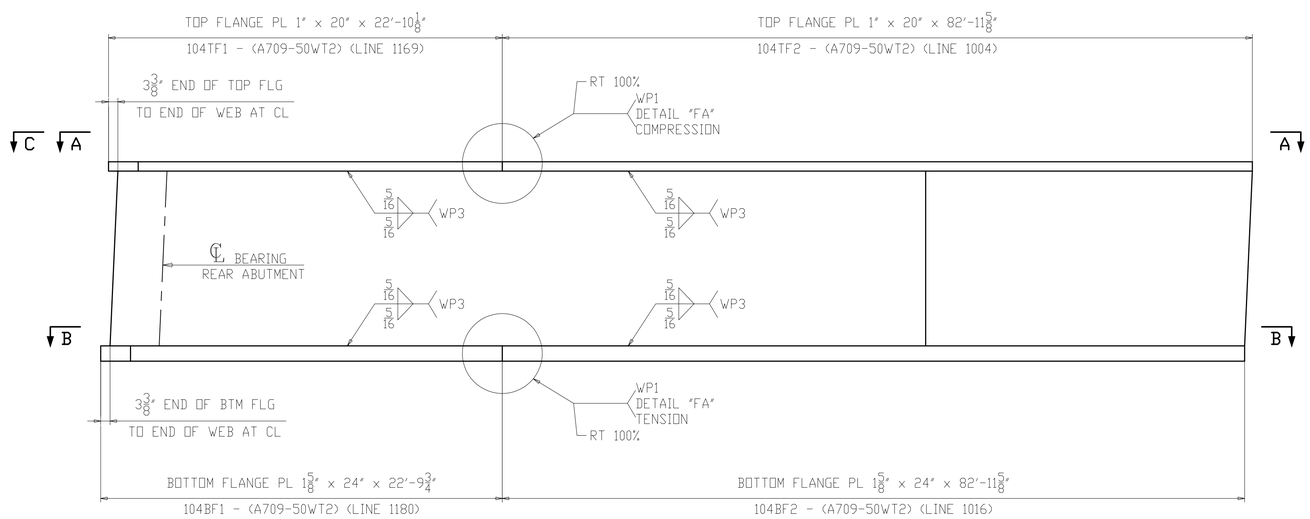

FLANGE DIAGRAM FOR 104D1

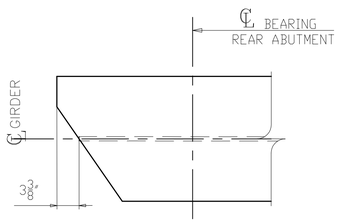

SECTION C
(SHOWN AT TOP)
(SIMILAR AT BOTTOM)

NOTES:
1. FOR GENERAL NOTES & WELD DETAILS "WB" & "FA" SEE SHEET GN101.
2. ALL MATERIAL A709-50WT2 (UN)
3. T2 - DENOTES MATERIAL SUBJECT TO CHARPY V-NOTCH TEST
- CVN = 15 FT-LBS @ 40°F "H" FREQ FOR THICKNESS UP 2".
- CVN = 20 FT-LBS @ 40°F "H" FREQ FOR THICKNESS OVER 2".

NO.	DATE	REMARKS	BY

REVISIONS

Veritas STEEL
2-EAU CLAIRE, WI 3-WAUSAU, WI 4-PALATKA, FL
IAENCA 1605

STRUCTURE	CUY-010-1978R, OH-10 EASTBOUND OVER GCRTA BLUE AND GREEN LINES
LOCATION	CLEVELAND, OHIO CUYAHOGA COUNTY
PROJECT NO.	17-3000
ENGINEER	MICHAEL BAKER INTERNATIONAL
CONTRACTOR	KOKOSING
ITEM	CAMBER & FLANGES DIAGRAM
SURFACE PREP.	SEE P101 OPEN HOLES 1 1/16"Ø (U.N.O.)
PAINT	SEE P101

APPROVAL	DRAWN AM 05/10/19	SHEET NO.	PLANT	ORDER NO.
SHOP	CHECKED DP 06/05/19	BG104AB	3	317023A-20

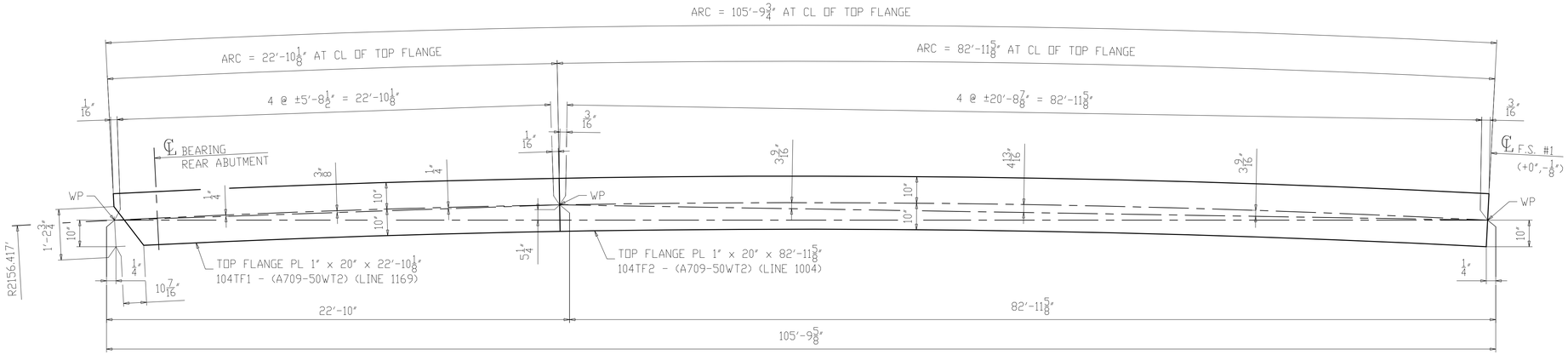

SECTION A-A
(TOP FLANGE)

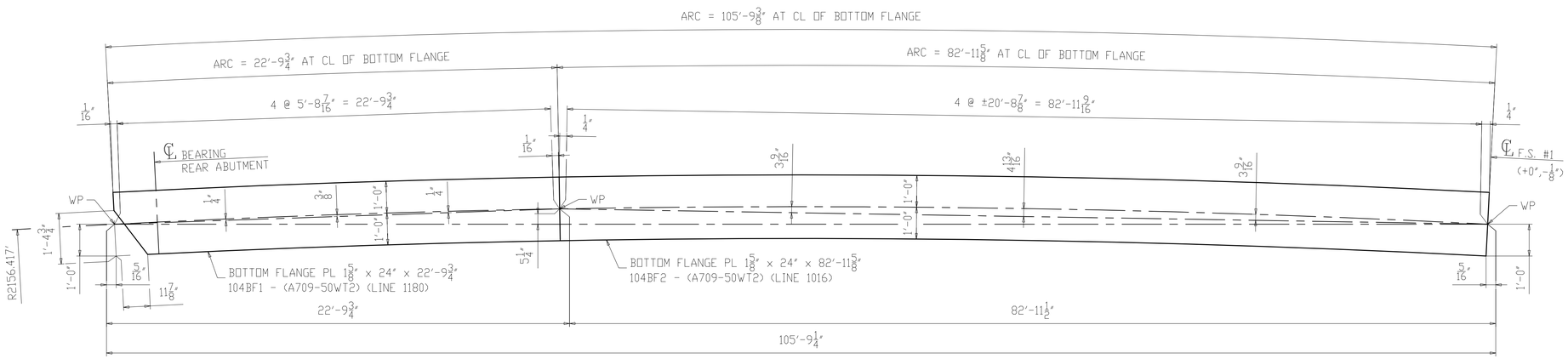

SECTION B-B
(BOTTOM FLANGE)

NOTES:
1. FOR GENERAL NOTES & WELD DETAILS "WB" & "FA" SEE SHEET GN101.
2. ALL MATERIAL A709-50WT2 (UN)
3. T2 - DENOTES MATERIAL SUBJECT TO CHARPY V-NOTCH TEST
- CVN = 15 FT-LBS @ 40°F "H" FREQ FOR THICKNESS UP 2".
- CVN = 20 FT-LBS @ 40°F "H" FREQ FOR THICKNESS OVER 2".

NO.	DATE	REMARKS	BY
△			

REVISIONS

Veritas STEEL
2-EAU CLAIRE, WI 3-WAUSAU, WI 4-PALATKA, FL
IENCA 1605

STRUCTURE	CUY-010-1978R, OH-10 EASTBOUND OVER GCRTA BLUE AND GREEN LINES
LOCATION	CLEVELAND, OHIO CUYAHOGA COUNTY
PROJECT NO.	17-3000
ENGINEER	MICHAEL BAKER INTERNATIONAL
CONTRACTOR	KOKOSING
ITEM	FLANGE DIAGRAM
SURFACE PREP.	SEE P101
OPEN HOLES	1 1/16"Ø (U.N.O.)
PAINT	SEE P101

APPROVAL	DRAWN AM 05/10/19	SHEET NO.	PLANT	ORDER NO.
SHOP	CHECKED DP 06/05/19	BG104B	3	317023A-20

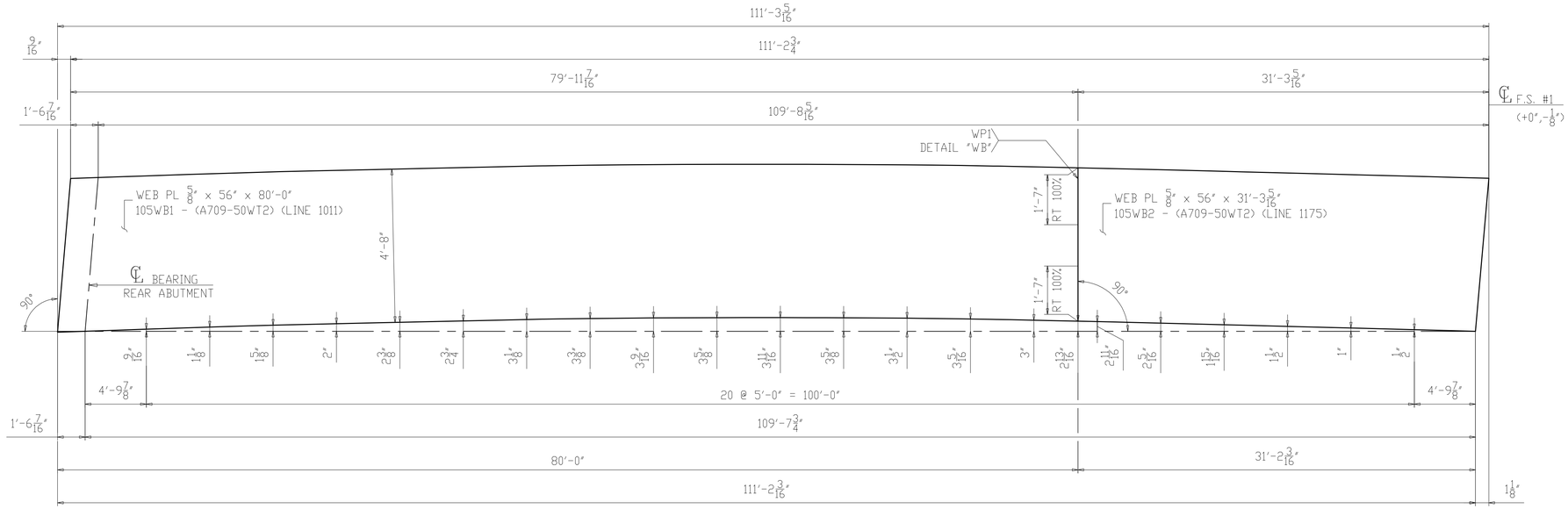

CAMBER DIAGRAM FOR 105E1
(DEVELOPED)

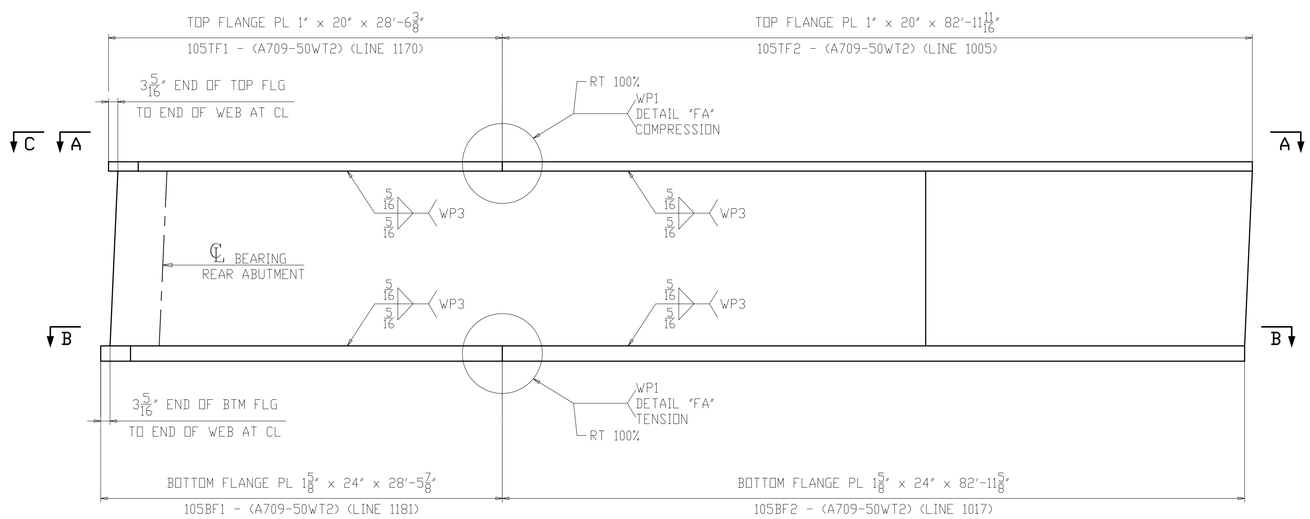

FLANGE DIAGRAM FOR 105E1

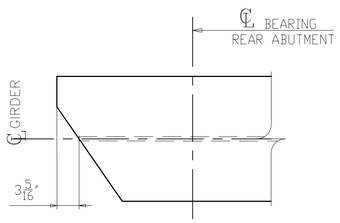

SECTION C
(SHOWN AT TOP)
(SIMILAR AT BOTTOM)

NOTES:
1. FOR GENERAL NOTES & WELD DETAILS "WB" & "FA" SEE SHEET GN101.
2. ALL MATERIAL A709-50WT2 (UN)
3. T2 - DENOTES MATERIAL SUBJECT TO CHARPY V-NOTCH TEST
- CVN = 15 FT-LBS @ 40°F "H" FREQ FOR THICKNESS UP 2".
- CVN = 20 FT-LBS @ 40°F "H" FREQ FOR THICKNESS OVER 2".

NO.	DATE	REMARKS	BY

REVISIONS

Veritas STEEL
2-EAU CLAIRE, WI 3-WAUSAU, WI 4-PALATKA, FL
TENCA 1605

STRUCTURE	CUY-010-1978R, OH-10 EASTBOUND OVER GCRTA BLUE AND GREEN LINES
LOCATION	CLEVELAND, OHIO CUYAHOGA COUNTY
PROJECT NO.	17-3000
ENGINEER	MICHAEL BAKER INTERNATIONAL
CONTRACTOR	KOKOSING
ITEM	CAMBER & FLANGES DIAGRAM
SURFACE PREP.	SEE P101
OPEN HOLES	1 1/16"Ø (U.N.O.)
PAINT	SEE P101

APPROVAL	DRAWN AM 05/10/19	SHEET NO.	PLANT	ORDER NO.
SHOP	CHECKED DP 06/05/19	BG105AB	3	317023A-20

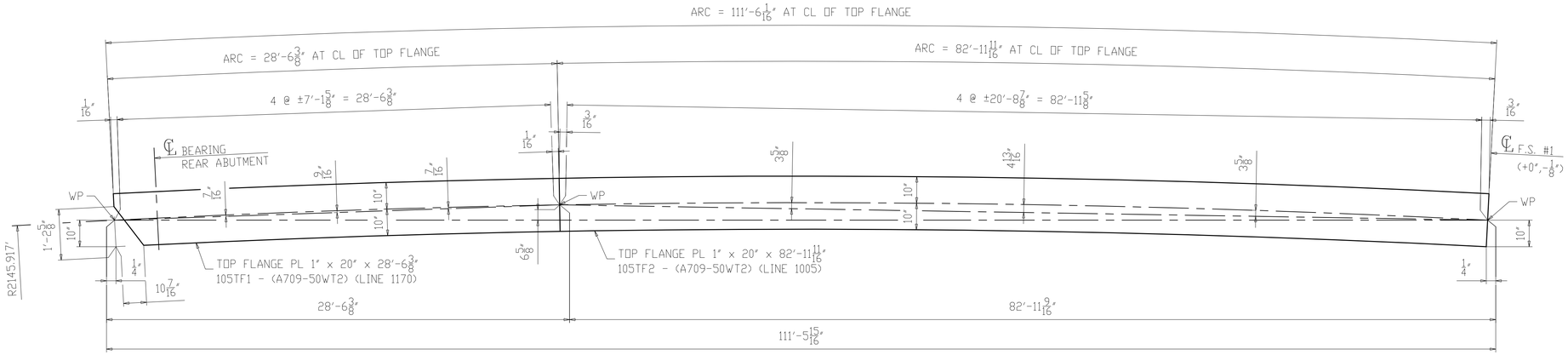

SECTION A-A
(TOP FLANGE)

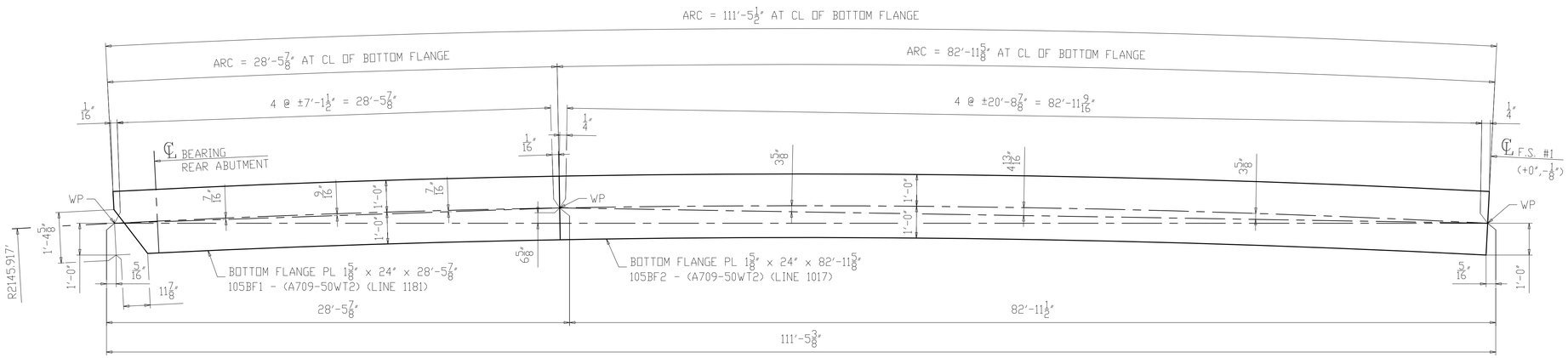

SECTION B-B
(BOTTOM FLANGE)

NOTES:
1. FOR GENERAL NOTES & WELD DETAILS "WB" & "FA" SEE SHEET GN101.
2. ALL MATERIAL A709-50WT2 (UN)
3. T2 - DENOTES MATERIAL SUBJECT TO CHARPY V-NOTCH TEST
- CVN = 15 FT-LBS @ 40°F "H" FREQ FOR THICKNESS UP 2".
- CVN = 20 FT-LBS @ 40°F "H" FREQ FOR THICKNESS OVER 2".

NO.	DATE	REMARKS	BY
△			

REVISIONS

Veritas STEEL
2-EAU CLAIRE, WI 3-WAUSAU, WI 4-PALATKA, FL
TENCA 1605

STRUCTURE	CUY-010-1978R, OH-10 EASTBOUND OVER GCRTA BLUE AND GREEN LINES
LOCATION	CLEVELAND, OHIO CUYAHOGA COUNTY
PROJECT NO.	17-3000
ENGINEER	MICHAEL BAKER INTERNATIONAL
CONTRACTOR	KOKOSING
ITEM	FLANGE DIAGRAM
SURFACE PREP.	SEE P101 OPEN HOLES 1 1/16"Ø (U.N.O.)
PAINT	SEE P101

APPROVAL	DRAWN AM 05/10/19	SHEET NO.	PLANT	ORDER NO.
SHOP	CHECKED DP 06/05/19	BG105B	3	317023A-20

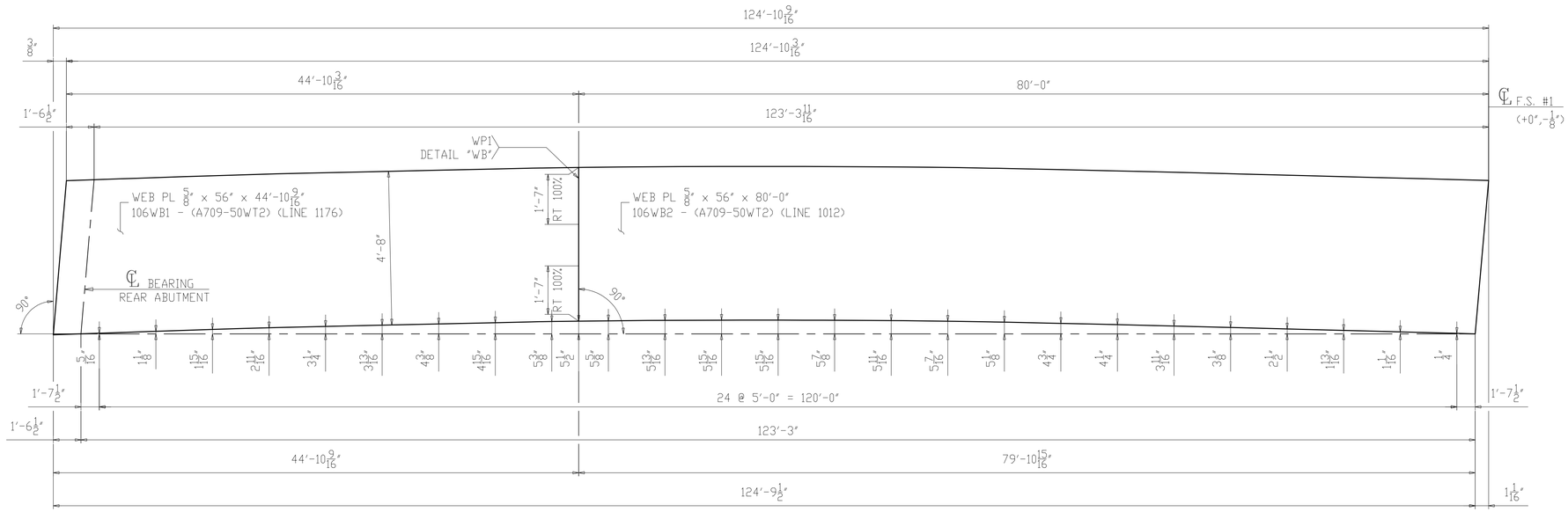

CAMBER DIAGRAM FOR 106F1
(DEVELOPED)

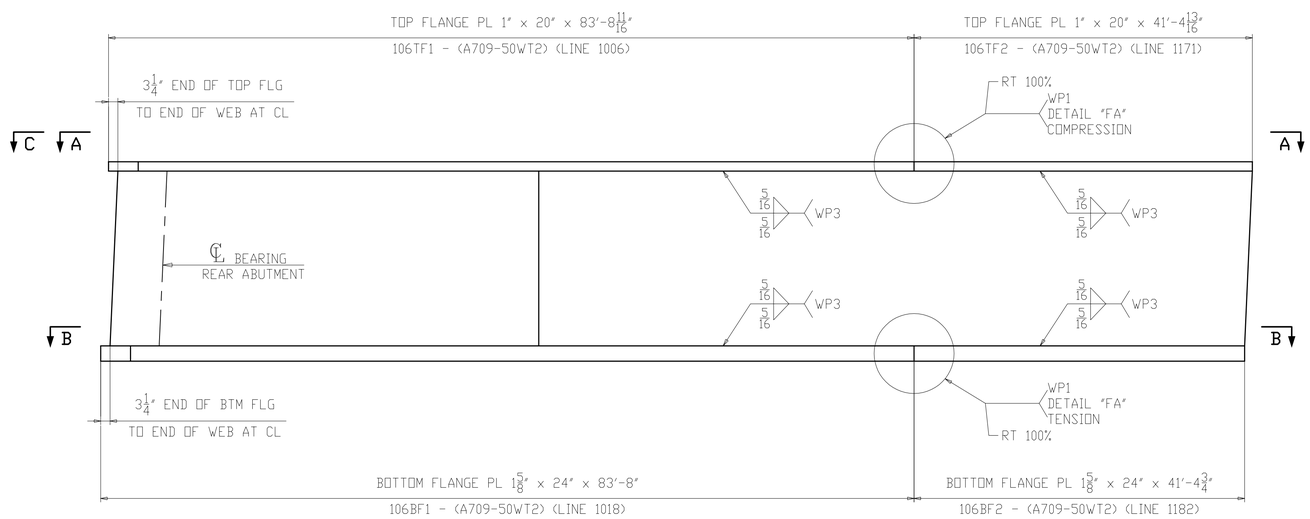

FLANGE DIAGRAM FOR 106F1

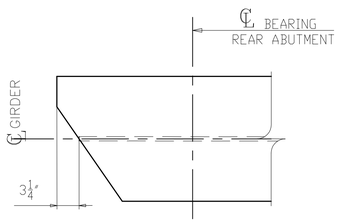

SECTION C
(SHOWN AT TOP)
(SIMILAR AT BOTTOM)

NOTES:
1. FOR GENERAL NOTES & WELD DETAILS "WB" & "FA" SEE SHEET GN101.
2. ALL MATERIAL A709-50WT2 (UN)
3. T2 - DENOTES MATERIAL SUBJECT TO CHARPY V-NOTCH TEST
- CVN = 15 FT-LBS @ 40°F "H" FREQ FOR THICKNESS UP 2".
- CVN = 20 FT-LBS @ 40°F "H" FREQ FOR THICKNESS OVER 2".

NO.	DATE	REMARKS	BY

REVISIONS

Veritas STEEL
2-EAU CLAIRE, WI 3-WAUSAU, WI 4-PALATKA, FL
TENCA 1605

STRUCTURE	CUY-010-1978R, OH-10 EASTBOUND OVER GCRTA BLUE AND GREEN LINES
LOCATION	CLEVELAND, OHIO CUYAHOGA COUNTY
PROJECT NO.	17-3000
ENGINEER	MICHAEL BAKER INTERNATIONAL
CONTRACTOR	KOKOSING
ITEM	CAMBER & FLANGES DIAGRAM
SURFACE PREP.	SEE P101
OPEN HOLES	1 1/16"Ø (U.N.O.)
PAINT	SEE P101

APPROVAL	DRAWN AM 05/10/19	SHEET NO.	PLANT	ORDER NO.
SHOP	CHECKED DP 06/05/19	BG106AB	3	317023A-20

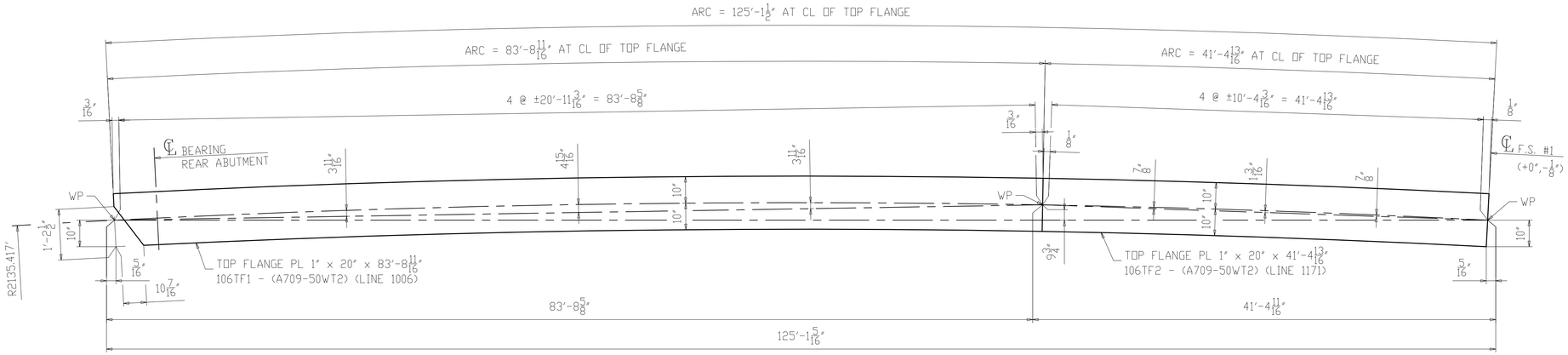

SECTION A-A
(TOP FLANGE)

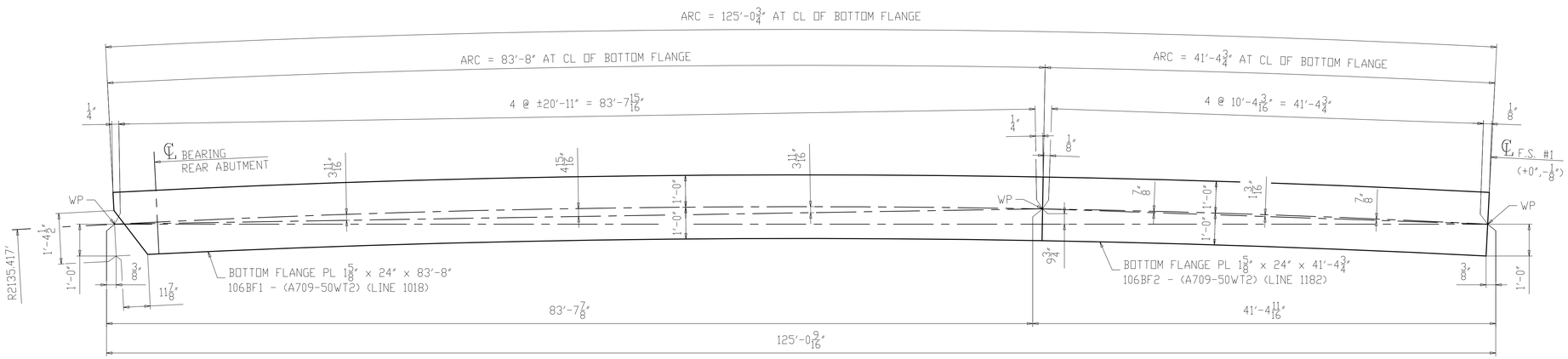

SECTION B-B
(BOTTOM FLANGE)

NOTES:
1. FOR GENERAL NOTES & WELD DETAILS "WB" & "FA" SEE SHEET GN101.
2. ALL MATERIAL A709-50WT2 (UN)
3. T2 - DENOTES MATERIAL SUBJECT TO CHARPY V-NOTCH TEST
- CVN = 15 FT-LBS @ 40°F "H" FREQ FOR THICKNESS UP 2".
- CVN = 20 FT-LBS @ 40°F "H" FREQ FOR THICKNESS OVER 2".

NO.	DATE	REMARKS	BY
△			

REVISIONS

Veritas STEEL
2-EAU CLAIRE, WI 3-WAUSAU, WI 4-PALATKA, FL
TENCA 1605

STRUCTURE	CUY-010-1978R, OH-10 EASTBOUND OVER GCRTA BLUE AND GREEN LINES
LOCATION	CLEVELAND, OHIO CUYAHOGA COUNTY
PROJECT NO.	17-3000
ENGINEER	MICHAEL BAKER INTERNATIONAL
CONTRACTOR	KOKOSING
ITEM	FLANGE DIAGRAM
SURFACE PREP.	SEE P101
OPEN HOLES	1 1/16"Ø (U.N.O.)
PAINT	SEE P101

APPROVAL	DRAWN AM 05/10/19	SHEET NO.	PLANT	ORDER NO.
SHOP	CHECKED DP 06/05/19	BG106B	3	317023A-20

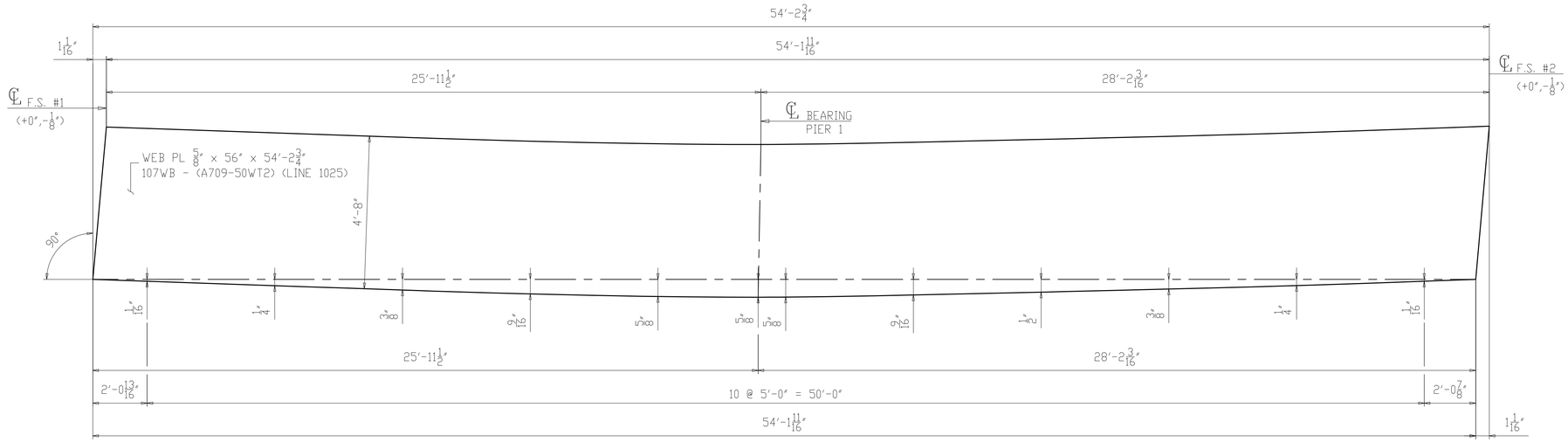

CAMBER DIAGRAM FOR 107A2
(DEVELOPED)

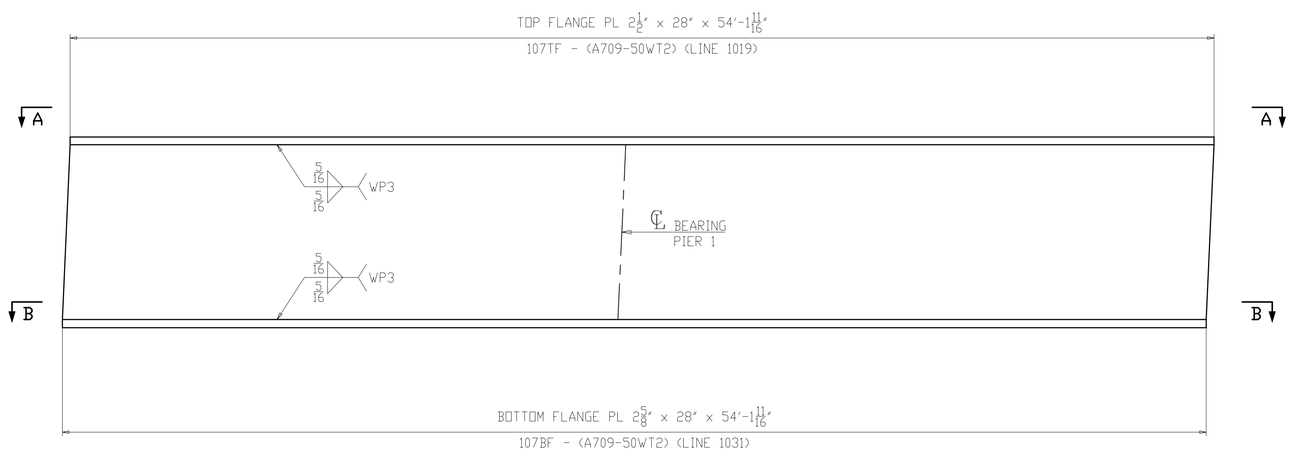

FLANGE DIAGRAM FOR 107A2

NOTES:
1. FOR GENERAL NOTES & WELD DETAILS "WB" & "FA" SEE SHEET GN101.
2. ALL MATERIAL A709-50WT2 (UN)
3. T2 - DENOTES MATERIAL SUBJECT TO CHARPY V-NOTCH TEST
- CVN = 15 FT-LBS @ 40°F "H" FREQ FOR THICKNESS UP 2".
- CVN = 20 FT-LBS @ 40°F "H" FREQ FOR THICKNESS OVER 2".

NO.	DATE	REMARKS	BY

REVISIONS

Veritas STEEL
2-EAU CLAIRE, WI 3-WAUSAU, WI 4-PALATKA, FL
IAS NDT 1605

STRUCTURE	CUY-010-1978R, OH-10 EASTBOUND OVER GCRTA BLUE AND GREEN LINES
LOCATION	CLEVELAND, OHIO CUYAHOGA COUNTY
PROJECT NO.	17-3000
ENGINEER	MICHAEL BAKER INTERNATIONAL
CONTRACTOR	KOKOSING
ITEM	CAMBER & FLANGES DIAGRAM
SURFACE PREP.	SEE P101
OPEN HOLES	1 1/16"Ø (U.N.O.)
PAINT	SEE P101

APPROVAL	DRAWN AM 05/10/19	SHEET NO.	PLANT	ORDER NO.
SHOP	CHECKED DP 06/05/19	BG107AB	3	317023A-20

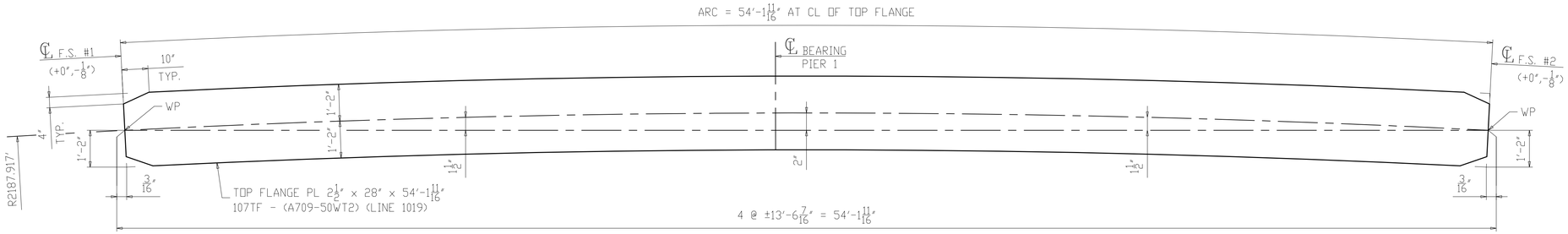

SECTION A-A
(TOP FLANGE)

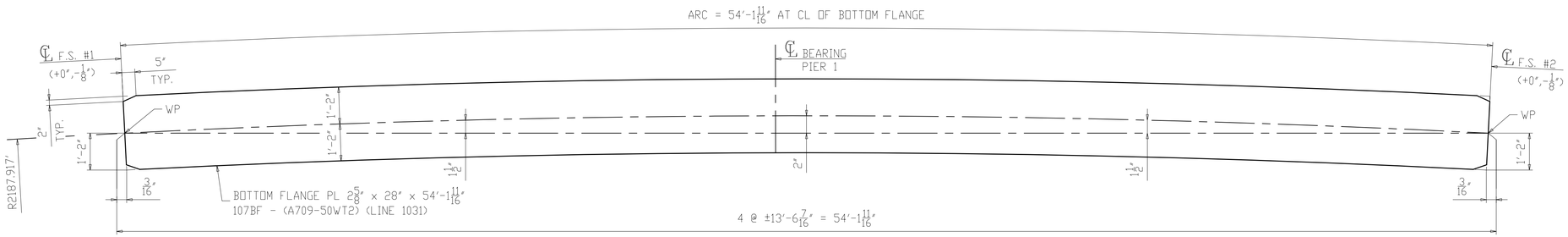

SECTION B-B
(BOTTOM FLANGE)

NOTES:
1. FOR GENERAL NOTES & WELD DETAILS "WB" & "FA" SEE SHEET GN101.
2. ALL MATERIAL A709-50WT2 (UN)
3. T2 - DENOTES MATERIAL SUBJECT TO CHARPY V-NOTCH TEST
- CVN = 15 FT-LBS @ 40°F "H" FREQ FOR THICKNESS UP 2".
- CVN = 20 FT-LBS @ 40°F "H" FREQ FOR THICKNESS OVER 2".

NO.	DATE	REMARKS	BY

REVISIONS

Veritas STEEL
2-EAU CLAIRE, WI 3-WAUSAU, WI 4-PALATKA, FL

STRUCTURE	CUY-010-1978R, OH-10 EASTBOUND OVER GCRTA BLUE AND GREEN LINES
LOCATION	CLEVELAND, OHIO CUYAHOGA COUNTY
PROJECT NO.	17-3000
ENGINEER	MICHAEL BAKER INTERNATIONAL
CONTRACTOR	KOKOSING
ITEM	FLANGE DIAGRAM
SURFACE PREP.	SEE P101 OPEN HOLES 1 1/16"Ø (U.N.O.)
PAINT	SEE P101

APPROVAL	DRAWN AM 05/10/19	SHEET NO.	PLANT	ORDER NO.
SHOP	CHECKED DP 06/05/19	BG107B	3	317023A-20

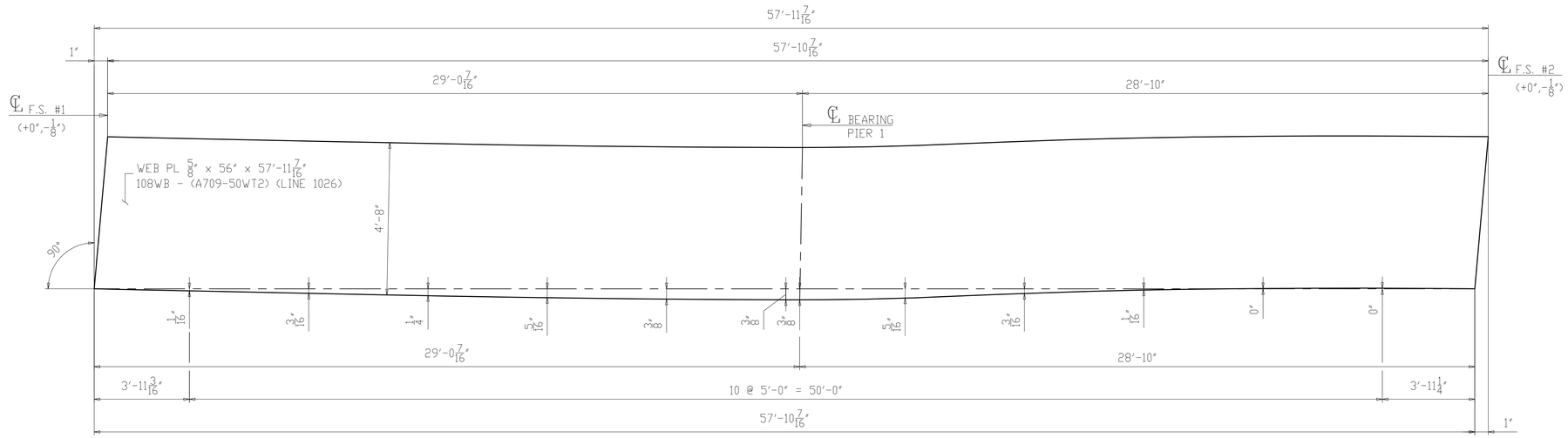

CAMBER DIAGRAM FOR 108B2
(DEVELOPED)

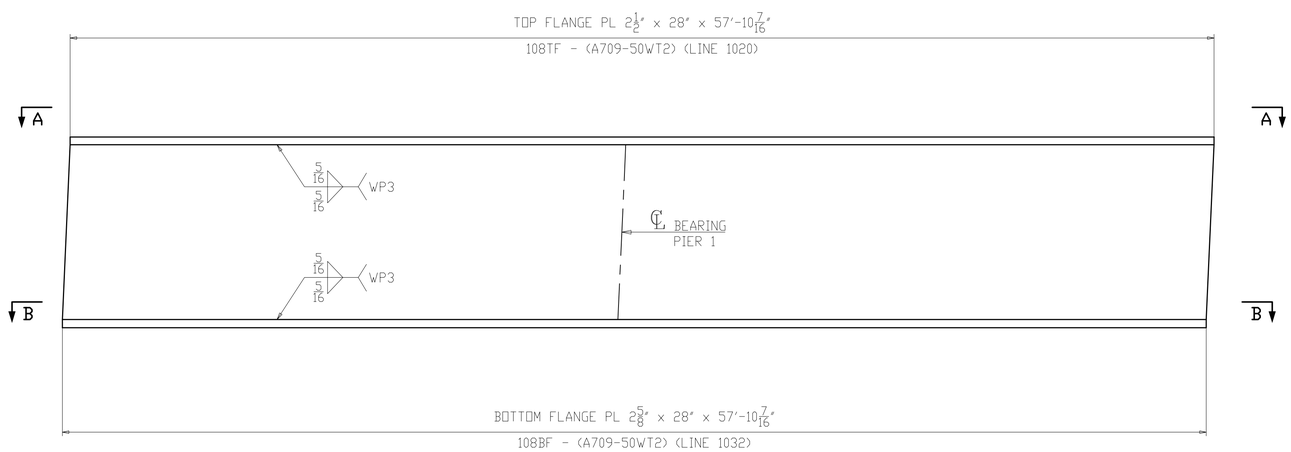

FLANGE DIAGRAM FOR 108B2

NOTES:
1. FOR GENERAL NOTES & WELD DETAILS "WB" & "FA" SEE SHEET GN101.
2. ALL MATERIAL A709-50WT2 (UN)
3. T2 - DENOTES MATERIAL SUBJECT TO CHARPY V-NOTCH TEST
- CVN = 15 FT-LBS @ 40°F "H" FREQ FOR THICKNESS UP 2".
- CVN = 20 FT-LBS @ 40°F "H" FREQ FOR THICKNESS OVER 2".

NO.	DATE	REMARKS	BY

REVISIONS

Veritas STEEL
2-EAU CLAIRE, WI 3-WAUSAU, WI 4-PALATKA, FL
IAS NCA 1605

STRUCTURE	CUY-010-1978R, OH-10 EASTBOUND OVER GCRTA BLUE AND GREEN LINES
LOCATION	CLEVELAND, OHIO CUYAHOGA COUNTY
PROJECT NO.	17-3000
ENGINEER	MICHAEL BAKER INTERNATIONAL
CONTRACTOR	KOKOSING
ITEM	CAMBER & FLANGES DIAGRAM
SURFACE PREP.	SEE P101
OPEN HOLES	1 1/16"Ø (U.N.O.)
PAINT	SEE P101

APPROVAL	DRAWN AM 05/10/19	SHEET NO.	PLANT	ORDER NO.
SHOP	CHECKED DP 06/05/19	BG108AB	3	317023A-20

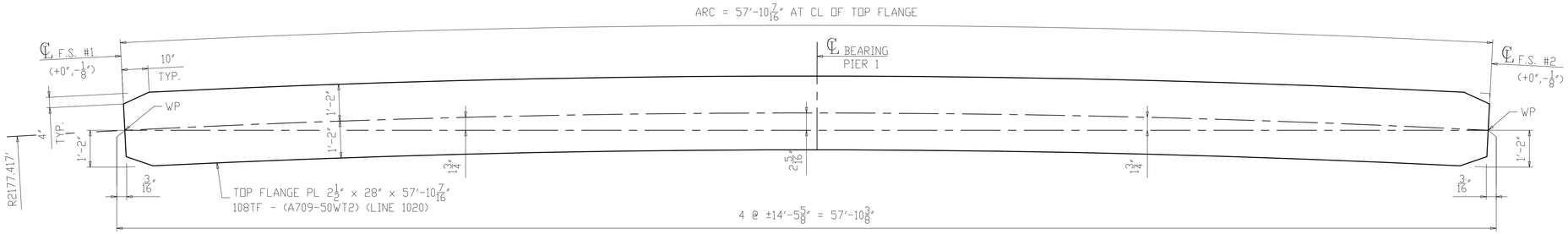

SECTION A-A
(TOP FLANGE)

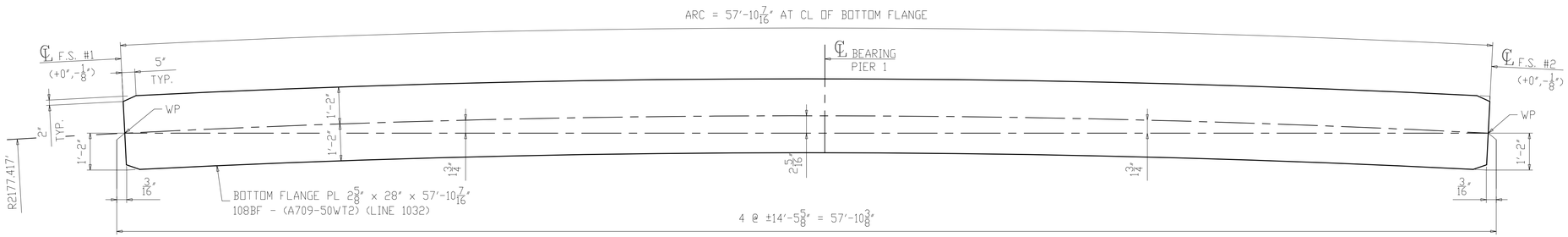

SECTION B-B
(BOTTOM FLANGE)

NOTES:
1. FOR GENERAL NOTES & WELD DETAILS "WB" & "FA" SEE SHEET GN101.
2. ALL MATERIAL A709-50WT2 (UN)
3. T2 - DENOTES MATERIAL SUBJECT TO CHARPY V-NOTCH TEST
- CVN = 15 FT-LBS @ 40°F "H" FREQ FOR THICKNESS UP 2".
- CVN = 20 FT-LBS @ 40°F "H" FREQ FOR THICKNESS OVER 2".

NO.	DATE	REMARKS	BY
△			

REVISIONS

Veritas STEEL
2-EAU CLAIRE, WI 3-WAUSAU, WI 4-PALATKA, FL
TENCA 1605

STRUCTURE	CUY-010-1978R, OH-10 EASTBOUND OVER GCRTA BLUE AND GREEN LINES
LOCATION	CLEVELAND, OHIO CUYAHOGA COUNTY
PROJECT NO.	17-3000
ENGINEER	MICHAEL BAKER INTERNATIONAL
CONTRACTOR	KOKOSING
ITEM	FLANGE DIAGRAM
SURFACE PREP.	SEE P101 OPEN HOLES 1 1/16"Ø (U.N.O.)
PAINT	SEE P101

APPROVAL	DRAWN AM 05/10/19	SHEET NO.	PLANT	ORDER NO.
SHOP	CHECKED DP 06/05/19	BG108B	3	317023A-20

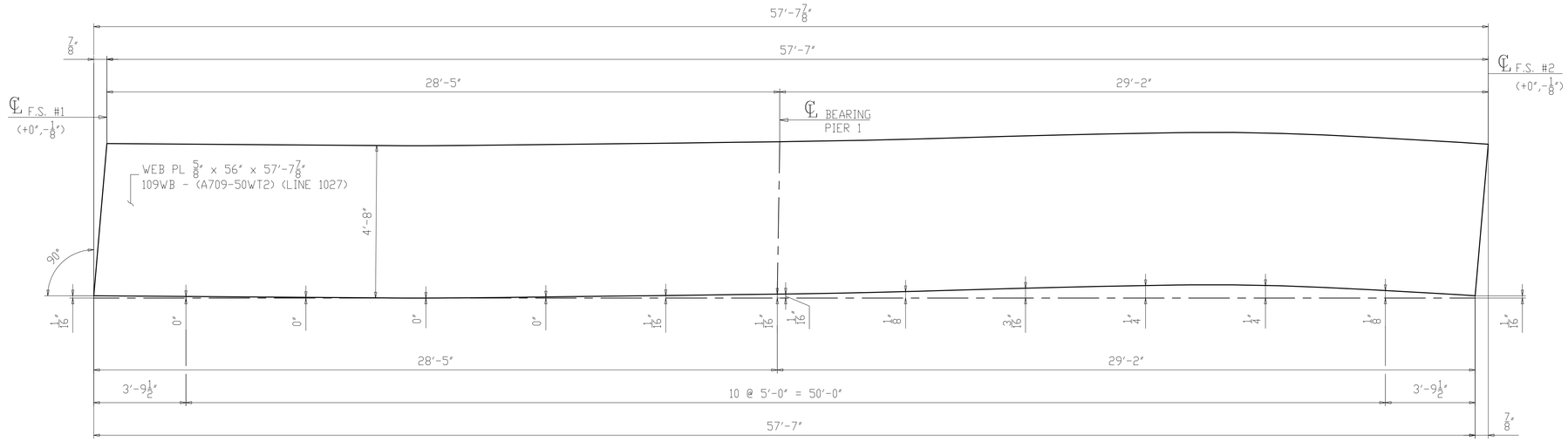

CAMBER DIAGRAM FOR 109C2
(DEVELOPED)

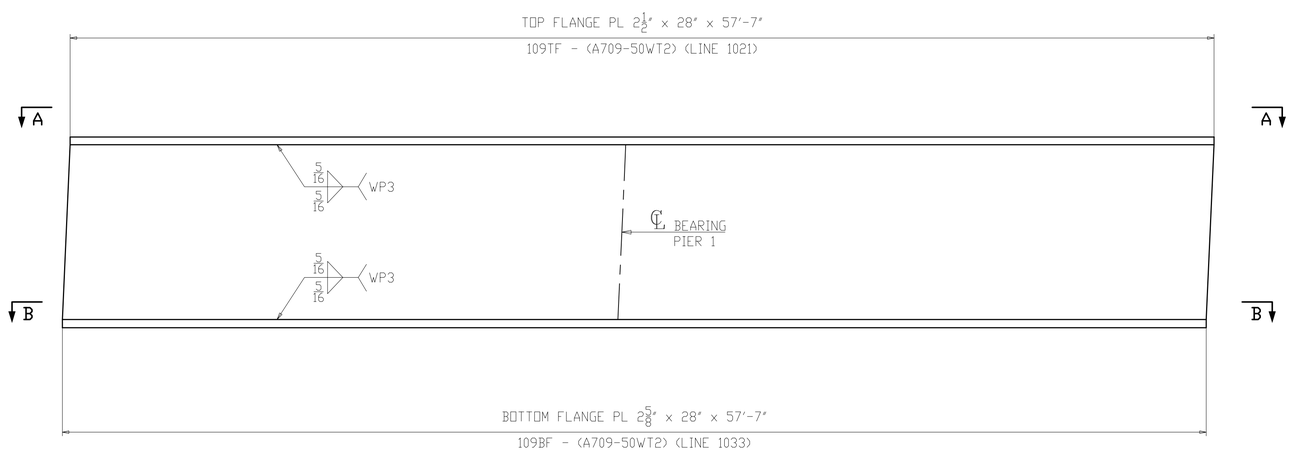

FLANGE DIAGRAM FOR 109C2

NOTES:
1. FOR GENERAL NOTES & WELD DETAILS "WB" & "FA" SEE SHEET GN101.
2. ALL MATERIAL A709-50WT2 (UN)
3. T2 - DENOTES MATERIAL SUBJECT TO CHARPY V-NOTCH TEST
- CVN = 15 FT-LBS @ 40°F "H" FREQ FOR THICKNESS UP 2".
- CVN = 20 FT-LBS @ 40°F "H" FREQ FOR THICKNESS OVER 2".

NO.	DATE	REMARKS	BY

REVISIONS

Veritas STEEL
2-EAU CLAIRE, WI 3-WAUSAU, WI 4-PALATKA, FL
IAS 1605

STRUCTURE	CUY-010-1978R, OH-10 EASTBOUND OVER GCRTA BLUE AND GREEN LINES
LOCATION	CLEVELAND, OHIO CUYAHOGA COUNTY
PROJECT NO.	17-3000
ENGINEER	MICHAEL BAKER INTERNATIONAL
CONTRACTOR	KOKOSING
ITEM	CAMBER & FLANGES DIAGRAM
SURFACE PREP.	SEE P101 OPEN HOLES 1 1/16"Ø (U.N.O.)
PAINT	SEE P101

APPROVAL	DRAWN AM 05/10/19	SHEET NO.	PLANT	ORDER NO.
SHOP	CHECKED DP 06/05/19	BG109AB	3	317023A-20

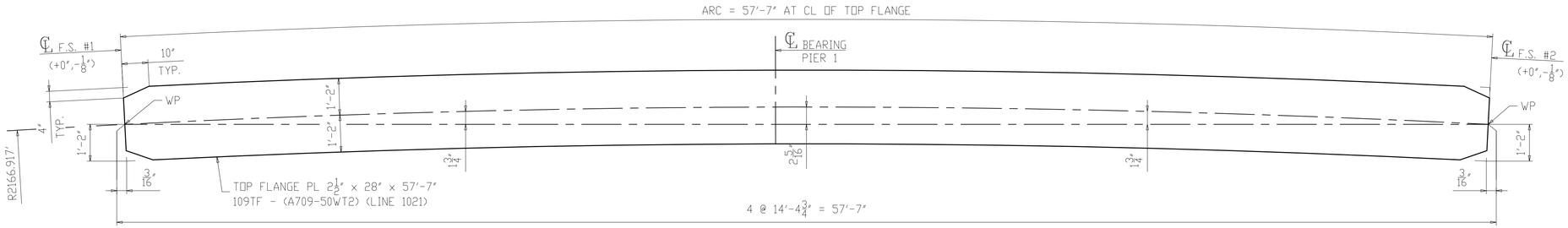

SECTION A-A
(TOP FLANGE)

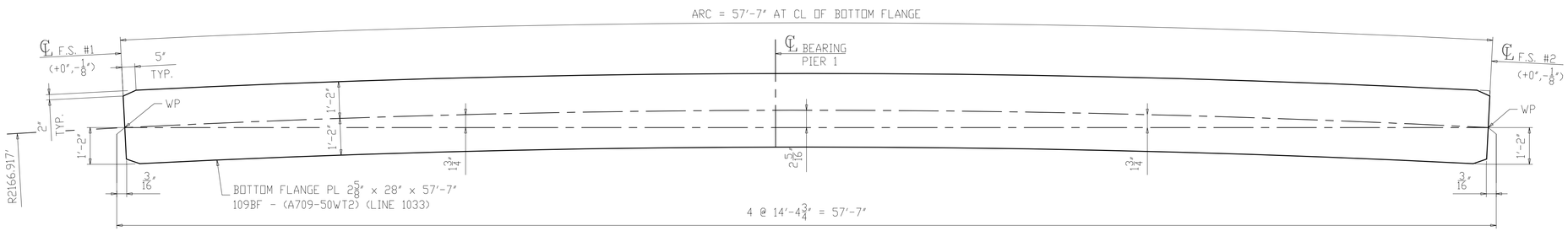

SECTION B-B
(BOTTOM FLANGE)

NOTES:
1. FOR GENERAL NOTES & WELD DETAILS "WB" & "FA" SEE SHEET GN101.
2. ALL MATERIAL A709-50WT2 (UN)
3. T2 - DENOTES MATERIAL SUBJECT TO CHARPY V-NOTCH TEST
- CVN = 15 FT-LBS @ 40°F "H" FREQ FOR THICKNESS UP 2".
- CVN = 20 FT-LBS @ 40°F "H" FREQ FOR THICKNESS OVER 2".

NO.	DATE	REMARKS	BY

REVISIONS

Veritas STEEL
2-EAU CLAIRE, WI 3-WAUSAU, WI 4-PALATKA, FL

STRUCTURE	CUY-010-1978R, OH-10 EASTBOUND OVER GCRTA BLUE AND GREEN LINES
LOCATION	CLEVELAND, OHIO CUYAHOGA COUNTY
PROJECT NO.	17-3000
ENGINEER	MICHAEL BAKER INTERNATIONAL
CONTRACTOR	KOKOSING
ITEM	FLANGE DIAGRAM
SURFACE PREP.	SEE P101 OPEN HOLES 1 1/16"Ø (U.N.O.)
PAINT	SEE P101

APPROVAL	DRAWN AM 05/10/19	SHEET NO.	PLANT	ORDER NO.
SHOP	CHECKED DP 06/05/19	BG109B	3	317023A-20

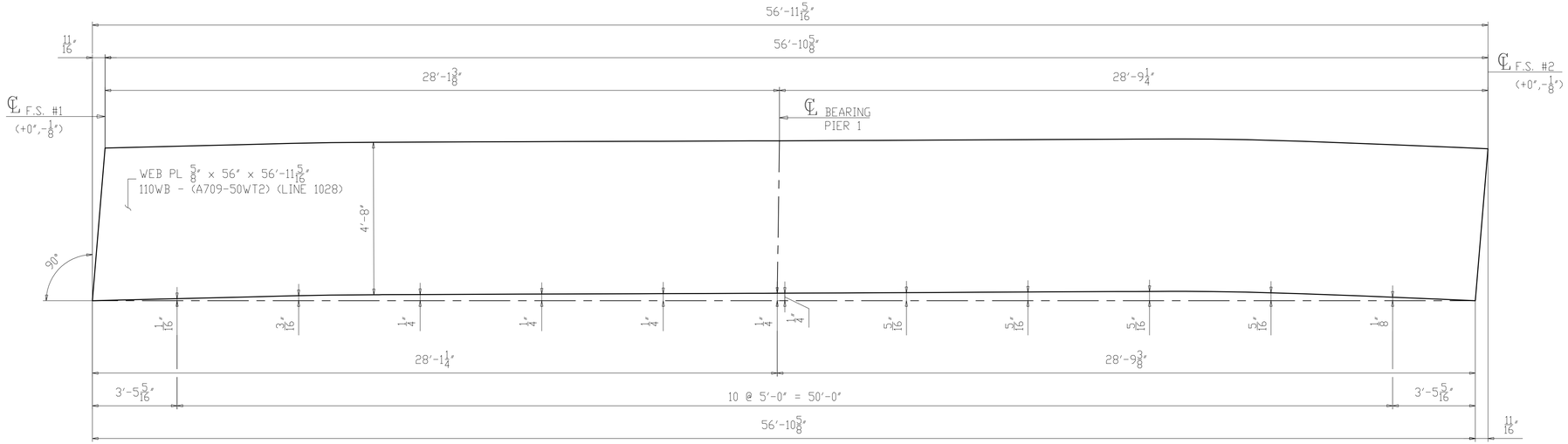

CAMBER DIAGRAM FOR 110D2
(DEVELOPED)

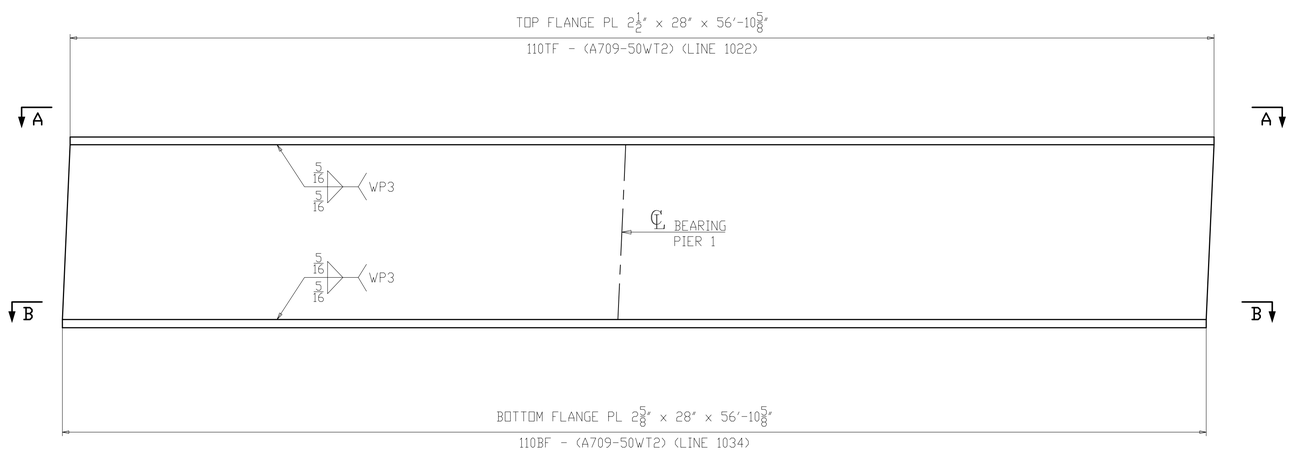

FLANGE DIAGRAM FOR 110D2

NOTES:
1. FOR GENERAL NOTES & WELD DETAILS "WB" & "FA" SEE SHEET GN101.
2. ALL MATERIAL A709-50WT2 (UN)
3. T2 - DENOTES MATERIAL SUBJECT TO CHARPY V-NOTCH TEST
- CVN = 15 FT-LBS @ 40°F "H" FREQ FOR THICKNESS UP 2".
- CVN = 20 FT-LBS @ 40°F "H" FREQ FOR THICKNESS OVER 2".

NO.	DATE	REMARKS	BY

REVISIONS

Veritas STEEL
2-EAU CLAIRE, WI 3-WAUSAU, WI 4-PALATKA, FL
IAS NCA 1605

STRUCTURE	CUY-010-1978R, OH-10 EASTBOUND OVER GCRTA BLUE AND GREEN LINES
LOCATION	CLEVELAND, OHIO CUYAHOGA COUNTY
PROJECT NO.	17-3000
ENGINEER	MICHAEL BAKER INTERNATIONAL
CONTRACTOR	KOKOSING
ITEM	CAMBER & FLANGES DIAGRAM
SURFACE PREP.	SEE P101
OPEN HOLES	1 1/16"Ø (U.N.O.)
PAINT	SEE P101

APPROVAL	DRAWN AM 05/10/19	SHEET NO.	PLANT	ORDER NO.
SHOP	CHECKED DP 06/05/19	BG110AB	3	317023A-20

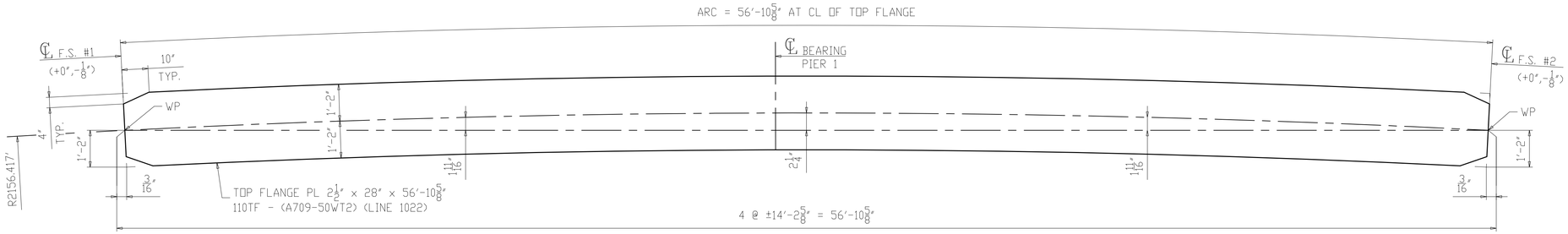

SECTION A-A
(TOP FLANGE)

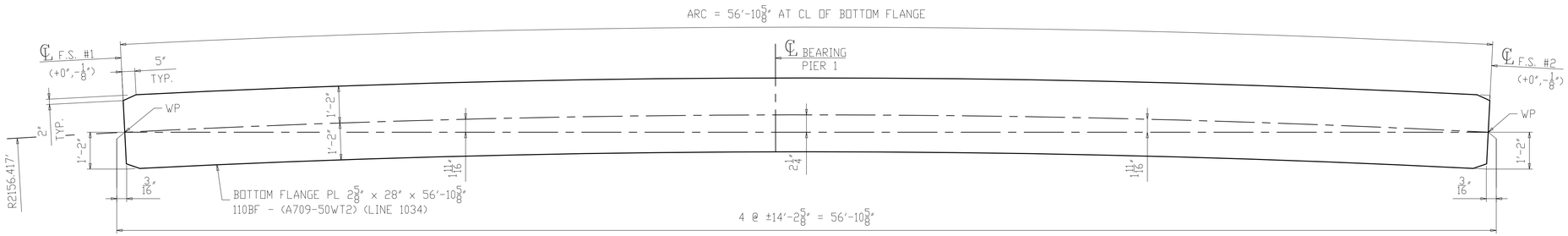

SECTION B-B
(BOTTOM FLANGE)

NOTES:
1. FOR GENERAL NOTES & WELD DETAILS "WB" & "FA" SEE SHEET GN101.
2. ALL MATERIAL A709-50WT2 (UN)
3. T2 - DENOTES MATERIAL SUBJECT TO CHARPY V-NOTCH TEST
- CVN = 15 FT-LBS @ 40°F "H" FREQ FOR THICKNESS UP 2".
- CVN = 20 FT-LBS @ 40°F "H" FREQ FOR THICKNESS OVER 2".

NO.	DATE	REMARKS	BY
△			

REVISIONS

Veritas STEEL
2-EAU CLAIRE, WI 3-WAUSAU, WI 4-PALATKA, FL
TENCA 1605

STRUCTURE	CUY-010-1978R, OH-10 EASTBOUND OVER GCRTA BLUE AND GREEN LINES
LOCATION	CLEVELAND, OHIO CUYAHOGA COUNTY
PROJECT NO.	17-3000
ENGINEER	MICHAEL BAKER INTERNATIONAL
CONTRACTOR	KOKOSING
ITEM	FLANGE DIAGRAM
SURFACE PREP.	SEE P101 OPEN HOLES 1 1/16"Ø (U.N.O.)
PAINT	SEE P101

APPROVAL	DRAWN AM 05/10/19	SHEET NO.	PLANT	ORDER NO.
SHOP	CHECKED DP 06/05/19	BG110B	3	317023A-20

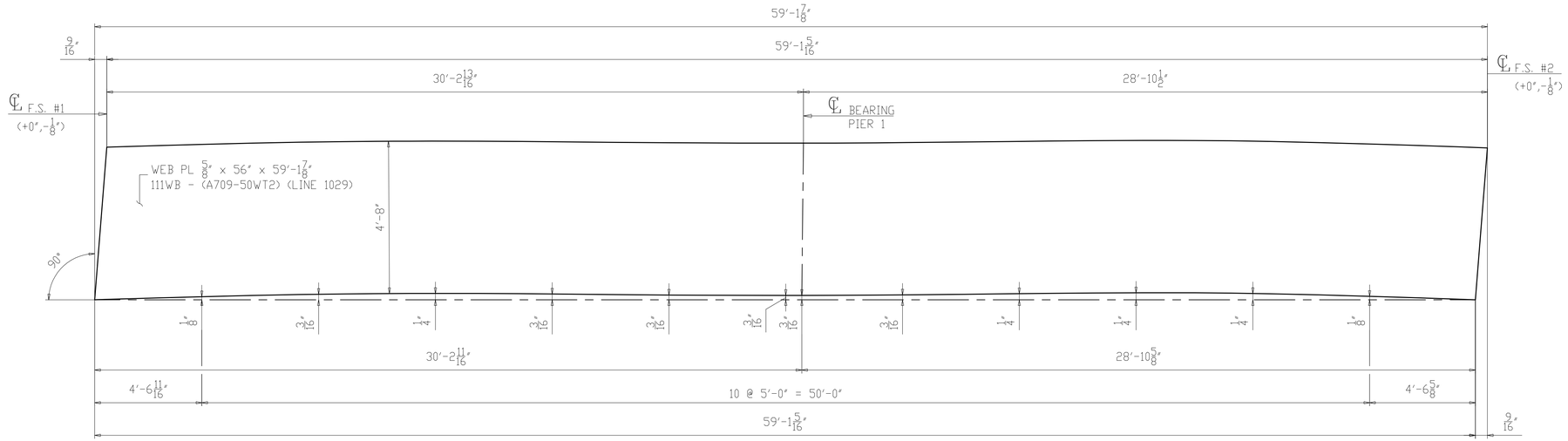

CAMBER DIAGRAM FOR 111E2
(DEVELOPED)

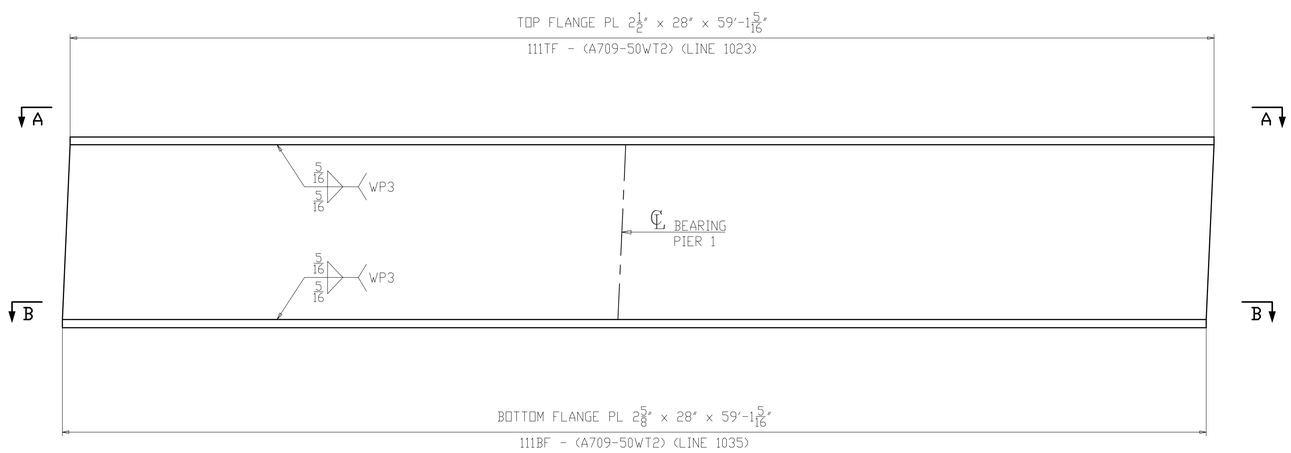

FLANGE DIAGRAM FOR 111E2

NOTES:
1. FOR GENERAL NOTES & WELD DETAILS "WB" & "FA" SEE SHEET GN101.
2. ALL MATERIAL A709-50WT2 (UN)
3. T2 - DENOTES MATERIAL SUBJECT TO CHARPY V-NOTCH TEST
- CVN = 15 FT-LBS @ 40°F "H" FREQ FOR THICKNESS UP 2".
- CVN = 20 FT-LBS @ 40°F "H" FREQ FOR THICKNESS OVER 2".

NO.	DATE	REMARKS	BY

REVISIONS

Veritas STEEL
2-EAU CLAIRE, WI 3-WAUSAU, WI 4-PALATKA, FL
IAS 1605

STRUCTURE	CUY-010-1978R, OH-10 EASTBOUND OVER GCRTA BLUE AND GREEN LINES
LOCATION	CLEVELAND, OHIO CUYAHOGA COUNTY
PROJECT NO.	17-3000
ENGINEER	MICHAEL BAKER INTERNATIONAL
CONTRACTOR	KOKOSING
ITEM	CAMBER & FLANGES DIAGRAM
SURFACE PREP.	SEE P101
OPEN HOLES	1 1/16"Ø (U.N.O.)
PAINT	SEE P101

APPROVAL	DRAWN AM 05/10/19	SHEET NO.	PLANT	ORDER NO.
SHOP	CHECKED DP 06/05/19	BG111AB	3	317023A-20

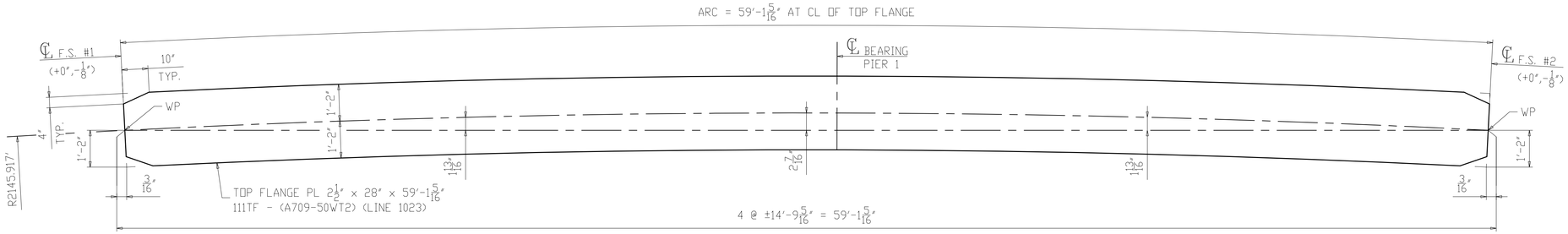

SECTION A-A
(TOP FLANGE)

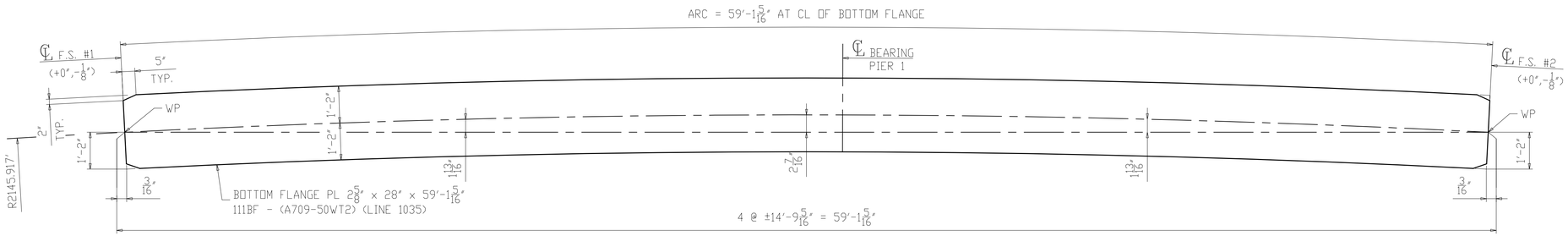

SECTION B-B
(BOTTOM FLANGE)

NOTES:
1. FOR GENERAL NOTES & WELD DETAILS "WB" & "FA" SEE SHEET GN101.
2. ALL MATERIAL A709-50WT2 (UN)
3. T2 - DENOTES MATERIAL SUBJECT TO CHARPY V-NOTCH TEST
- CVN = 15 FT-LBS @ 40°F "H" FREQ FOR THICKNESS UP 2".
- CVN = 20 FT-LBS @ 40°F "H" FREQ FOR THICKNESS OVER 2".

NO.	DATE	REMARKS	BY
△			

REVISIONS

Veritas STEEL
2-EAU CLAIRE, WI 3-WAUSAU, WI 4-PALATKA, FL
TENCA 1605

STRUCTURE: CUY-010-1978R, OH-10 EASTBOUND OVER GCRTA BLUE AND GREEN LINES
LOCATION: CLEVELAND, OHIO CUYAHOGA COUNTY
PROJECT NO.: 17-3000
ENGINEER: MICHAEL BAKER INTERNATIONAL
CONTRACTOR: KOKOSING

ITEM: FLANGE DIAGRAM
SURFACE PREP.: SEE P101 OPEN HOLES: 1 1/16"Ø (U.N.O.)
PAINT: SEE P101

APPROVAL	DRAWN AM 05/10/19	SHEET NO.	PLANT	ORDER NO.
SHOP	CHECKED DP 06/05/19	BG111B	3	317023A-20

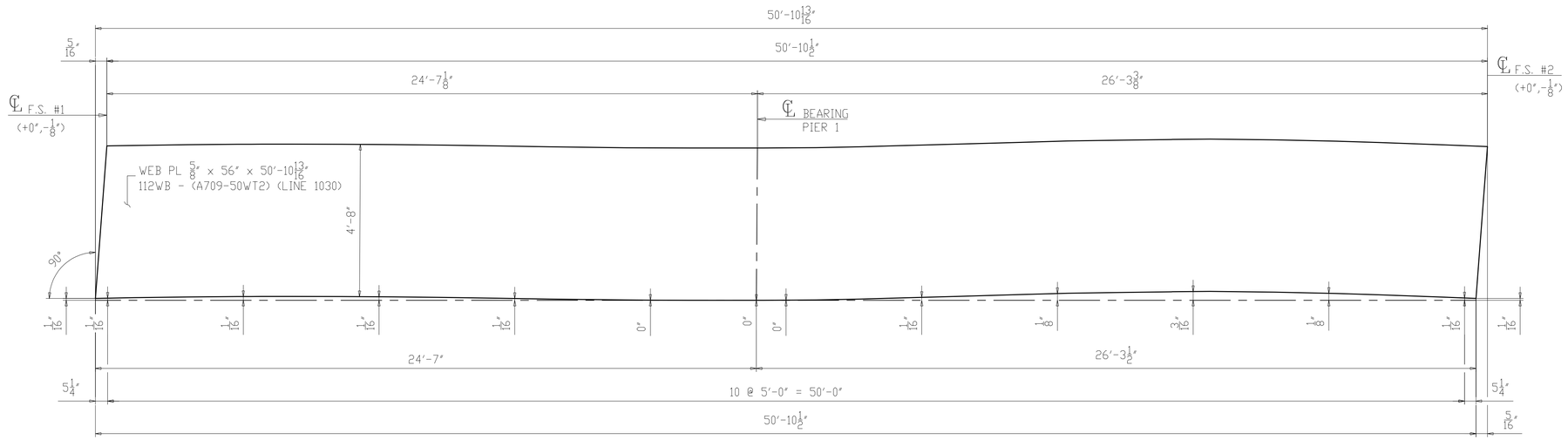

CAMBER DIAGRAM FOR 112F2
(DEVELOPED)

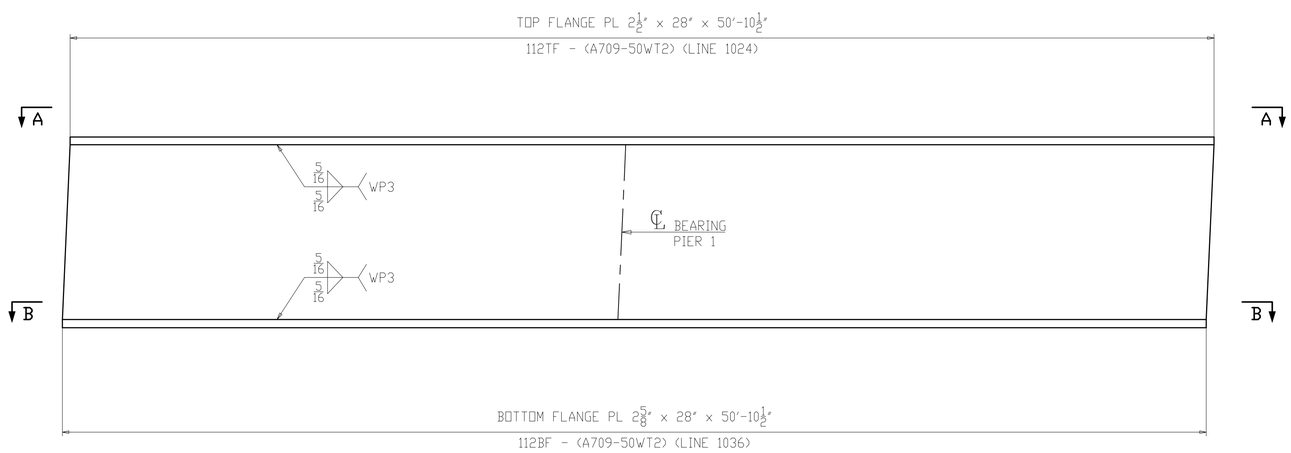

FLANGE DIAGRAM FOR 112F2

NOTES:
1. FOR GENERAL NOTES & WELD DETAILS "WB" & "FA" SEE SHEET GN101.
2. ALL MATERIAL A709-50WT2 (UN)
3. T2 - DENOTES MATERIAL SUBJECT TO CHARPY V-NOTCH TEST
- CVN = 15 FT-LBS @ 40°F "H" FREQ FOR THICKNESS UP 2".
- CVN = 20 FT-LBS @ 40°F "H" FREQ FOR THICKNESS OVER 2".

NO.	DATE	REMARKS	BY

REVISIONS

Veritas STEEL
2-EAU CLAIRE, WI 3-WAUSAU, WI 4-PALATKA, FL
IAS NDT 1605

STRUCTURE	CUY-010-1978R, OH-10 EASTBOUND OVER GCRTA BLUE AND GREEN LINES
LOCATION	CLEVELAND, OHIO CUYAHOGA COUNTY
PROJECT NO.	17-3000
ENGINEER	MICHAEL BAKER INTERNATIONAL
CONTRACTOR	KOKOSING
ITEM	CAMBER & FLANGES DIAGRAM
SURFACE PREP.	SEE P101 OPEN HOLES 1 1/16"Ø (U.N.O.)
PAINT	SEE P101

APPROVAL	DRAWN AM 05/10/19	SHEET NO.	PLANT	ORDER NO.
SHOP	CHECKED DP 06/05/19	BG112AB	3	317023A-20

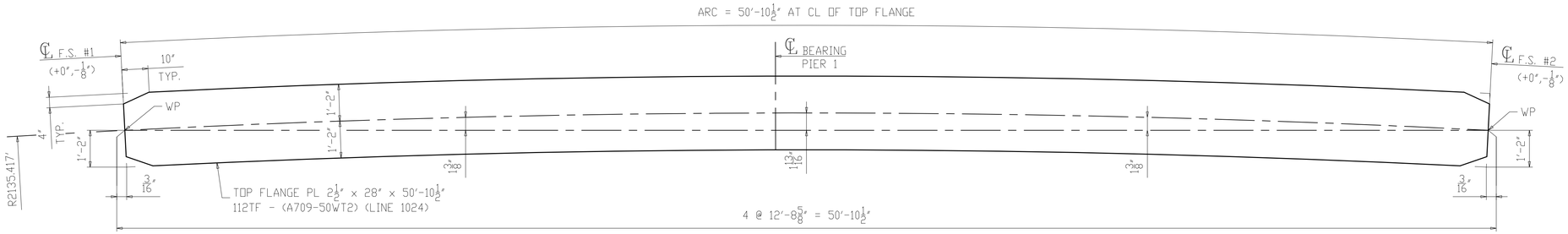

SECTION A-A
(TOP FLANGE)

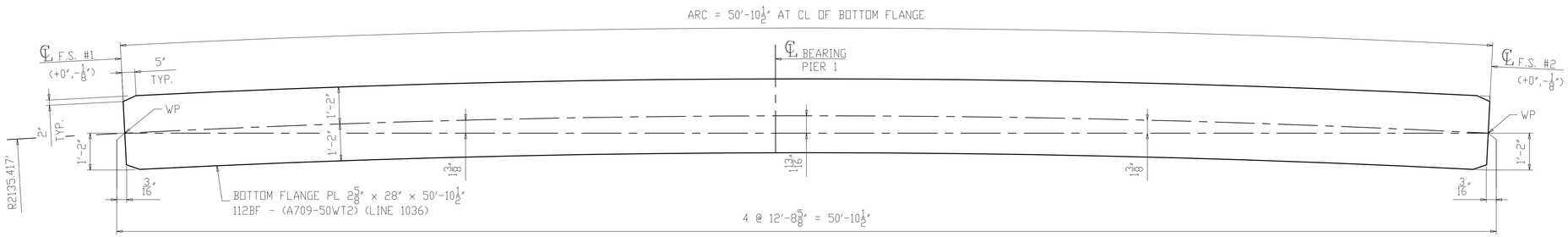

SECTION B-B
(BOTTOM FLANGE)

NOTES:
1. FOR GENERAL NOTES & WELD DETAILS "WB" & "FA" SEE SHEET GN101.
2. ALL MATERIAL A709-50WT2 (UN)
3. T2 - DENOTES MATERIAL SUBJECT TO CHARPY V-NOTCH TEST
- CVN = 15 FT-LBS @ 40°F "H" FREQ FOR THICKNESS UP 2".
- CVN = 20 FT-LBS @ 40°F "H" FREQ FOR THICKNESS OVER 2".

NO.	DATE	REMARKS	BY
△			

REVISIONS

Veritas STEEL
2-EAU CLAIRE, WI 3-WAUSAU, WI 4-PALATKA, FL
TENCA 1605

STRUCTURE	CUY-010-1978R, OH-10 EASTBOUND OVER GCRTA BLUE AND GREEN LINES
LOCATION	CLEVELAND, OHIO CUYAHOGA COUNTY
PROJECT NO.	17-3000
ENGINEER	MICHAEL BAKER INTERNATIONAL
CONTRACTOR	KOKOSING
ITEM	FLANGE DIAGRAM
SURFACE PREP.	SEE P101 OPEN HOLES 1 1/16"Ø (U.N.O.)
PAINT	SEE P101

APPROVAL	DRAWN AM 05/10/19	SHEET NO.	PLANT	ORDER NO.
SHOP	CHECKED DP 06/05/19	BG112B	3	317023A-20

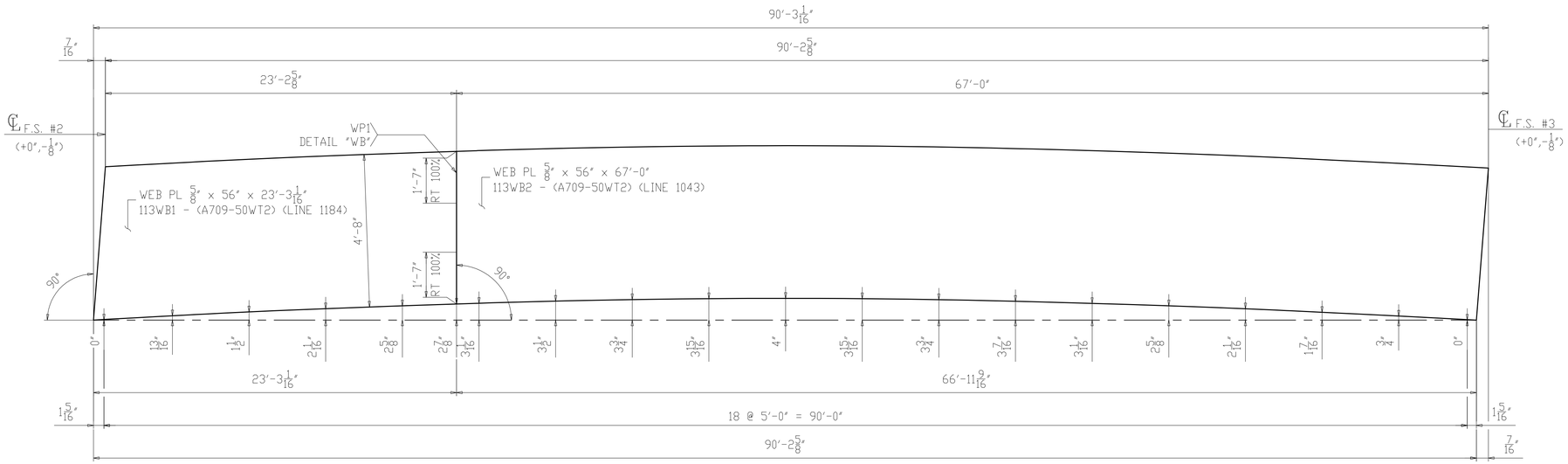

CAMBER DIAGRAM FOR 113A3
(DEVELOPED)

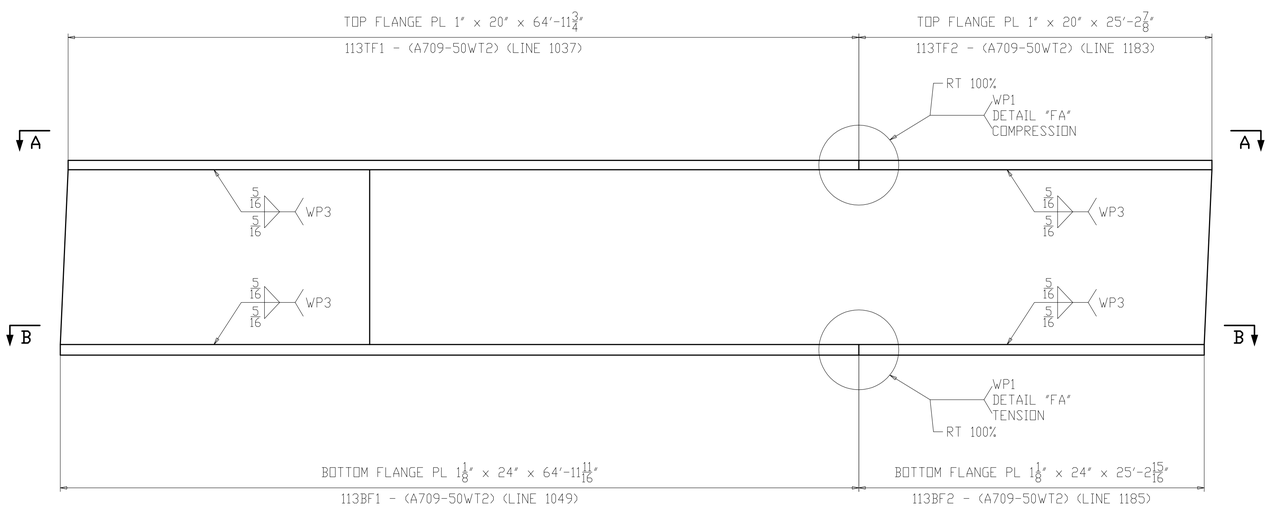

FLANGE DIAGRAM FOR 113A3

NOTES:
1. FOR GENERAL NOTES & WELD DETAILS "WB" & "FA" SEE SHEET GN101.
2. ALL MATERIAL A709-50WT2 (UN)
3. T2 - DENOTES MATERIAL SUBJECT TO CHARPY V-NOTCH TEST
- CVN = 15 FT-LBS @ 40°F "H" FREQ FOR THICKNESS UP 2".
- CVN = 20 FT-LBS @ 40°F "H" FREQ FOR THICKNESS OVER 2".

NO.	DATE	REMARKS	BY

REVISIONS

Veritas STEEL
2-EAU CLAIRE, WI 3-WAUSAU, WI 4-PALATKA, FL
TENCA 1605

STRUCTURE	CUY-010-1978R, OH-10 EASTBOUND OVER GCRTA BLUE AND GREEN LINES
LOCATION	CLEVELAND, OHIO CUYAHOGA COUNTY
PROJECT NO.	17-3000
ENGINEER	MICHAEL BAKER INTERNATIONAL
CONTRACTOR	KOKOSING
ITEM	CAMBER & FLANGES DIAGRAM
SURFACE PREP.	SEE P101 OPEN HOLES 1 1/16"Ø (U.N.O.)
PAINT	SEE P101

APPROVAL	DRAWN AM 05/10/19	SHEET NO.	PLANT	ORDER NO.
SHOP	CHECKED DP 06/05/19	BG113AB	3	317023A-20

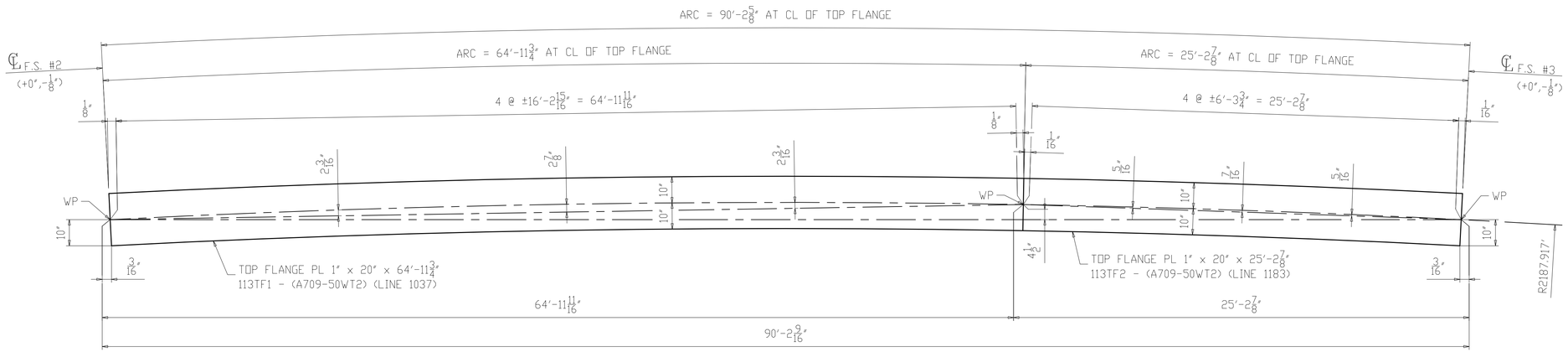

SECTION A-A
(TOP FLANGE)

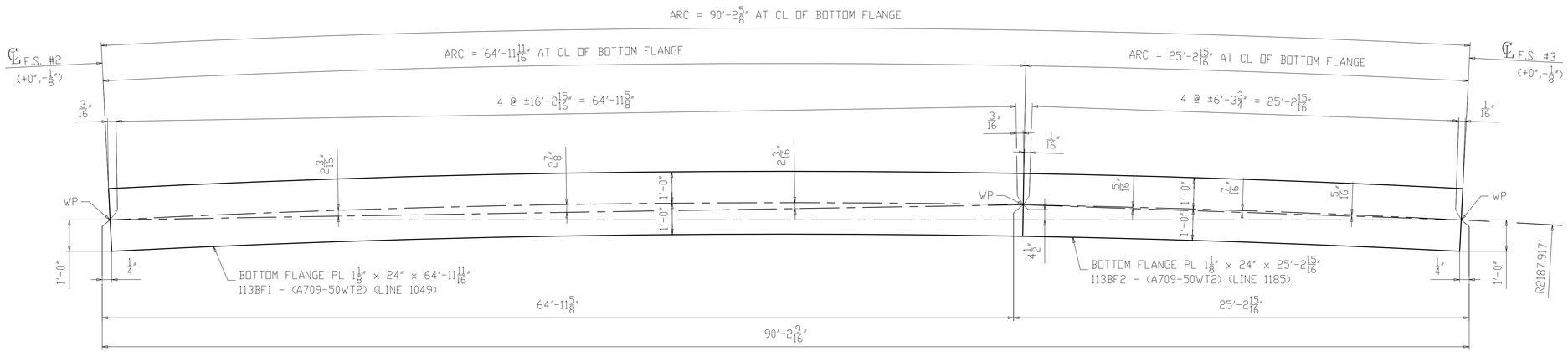

SECTION B-B
(BOTTOM FLANGE)

NOTES:
1. FOR GENERAL NOTES & WELD DETAILS "WB" & "FA" SEE SHEET GN101.
2. ALL MATERIAL A709-50WT2 (UN)
3. T2 - DENOTES MATERIAL SUBJECT TO CHARPY V-NOTCH TEST
- CVN = 15 FT-LBS @ 40°F "H" FREQ FOR THICKNESS UP 2".
- CVN = 20 FT-LBS @ 40°F "H" FREQ FOR THICKNESS OVER 2".

NO.	DATE	REMARKS	BY

REVISIONS

Veritas STEEL
2-EAU CLAIRE, WI 3-WAUSAU, WI 4-PALATKA, FL
TENCA 1605

STRUCTURE	CUY-010-1978R, OH-10 EASTBOUND OVER GCRTA BLUE AND GREEN LINES
LOCATION	CLEVELAND, OHIO CUYAHOGA COUNTY
PROJECT NO.	17-3000
ENGINEER	MICHAEL BAKER INTERNATIONAL
CONTRACTOR	KOKOSING
ITEM	FLANGE DIAGRAM
SURFACE PREP.	SEE P101 OPEN HOLES 1 1/16"Ø (U.N.O.)
PAINT	SEE P101

APPROVAL	DRAWN AM 05/10/19	SHEET NO.	PLANT	ORDER NO.
SHOP	CHECKED DP 06/05/19	BG113B	3	317023A-20

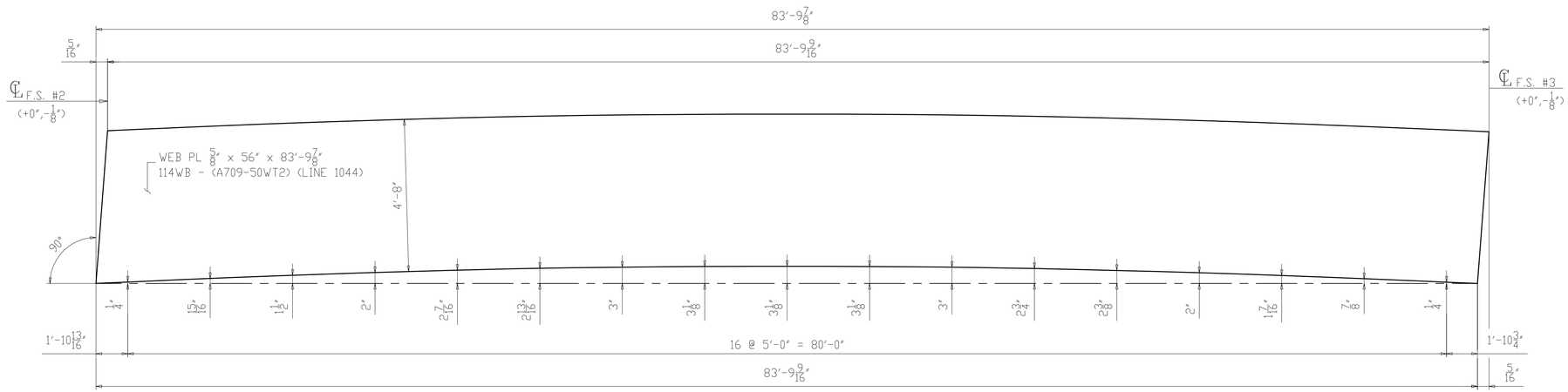

CAMBER DIAGRAM FOR 114B3
(DEVELOPED)

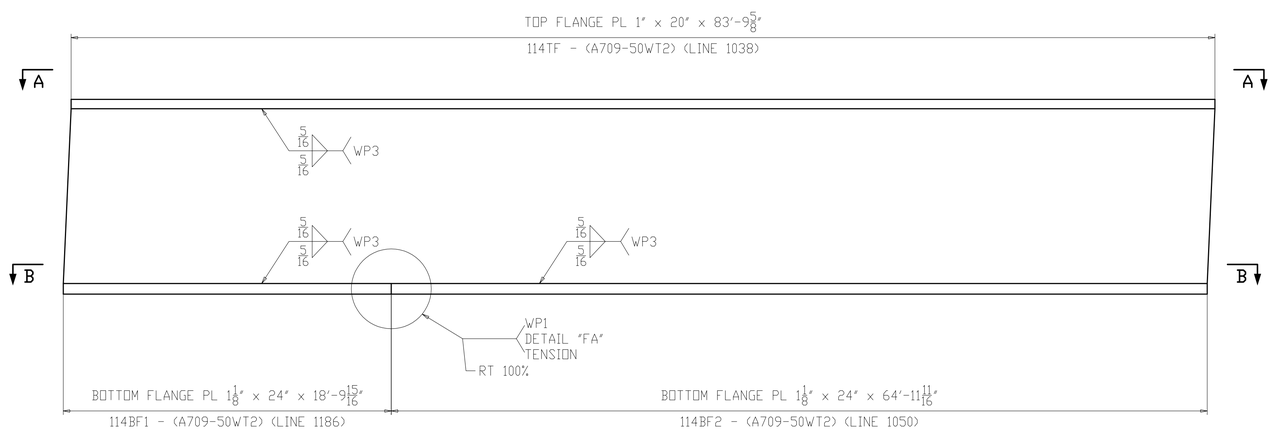

FLANGE DIAGRAM FOR 114B3

NOTES:
1. FOR GENERAL NOTES & WELD DETAILS "WB" & "FA" SEE SHEET GN101.
2. ALL MATERIAL A709-50WT2 (UN)
3. T2 - DENOTES MATERIAL SUBJECT TO CHARPY V-NOTCH TEST
- CVN = 15 FT-LBS @ 40°F "H" FREQ FOR THICKNESS UP 2".
- CVN = 20 FT-LBS @ 40°F "H" FREQ FOR THICKNESS OVER 2".

NO.	DATE	REMARKS	BY

REVISIONS

Veritas STEEL
2-EAU CLAIRE, WI 3-WAUSAU, WI 4-PALATKA, FL
TENCA 1605

STRUCTURE	CUY-010-1978R, OH-10 EASTBOUND OVER GCRTA BLUE AND GREEN LINES
LOCATION	CLEVELAND, OHIO CUYAHOGA COUNTY
PROJECT NO.	17-3000
ENGINEER	MICHAEL BAKER INTERNATIONAL
CONTRACTOR	KOKOSING
ITEM	CAMBER & FLANGES DIAGRAM
SURFACE PREP.	SEE P101 OPEN HOLES 1 1/16"Ø (U.N.O.)
PAINT	SEE P101

APPROVAL	DRAWN AM 05/10/19	SHEET NO.	PLANT	ORDER NO.
SHOP	CHECKED DP 06/05/19	BG114AB	3	317023A-20

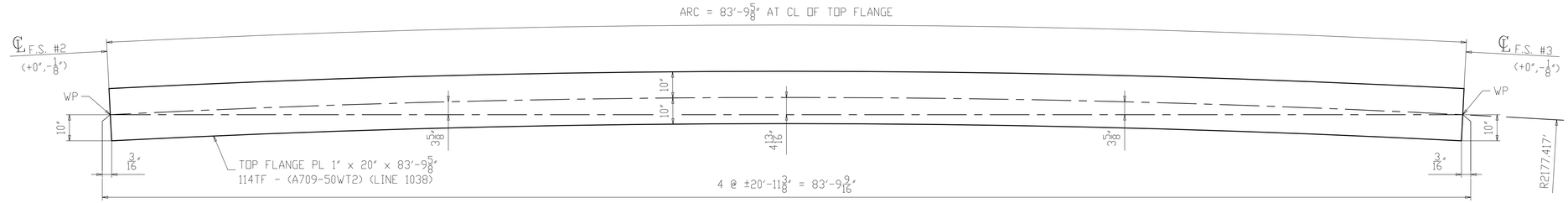

SECTION A-A
(TOP FLANGE)

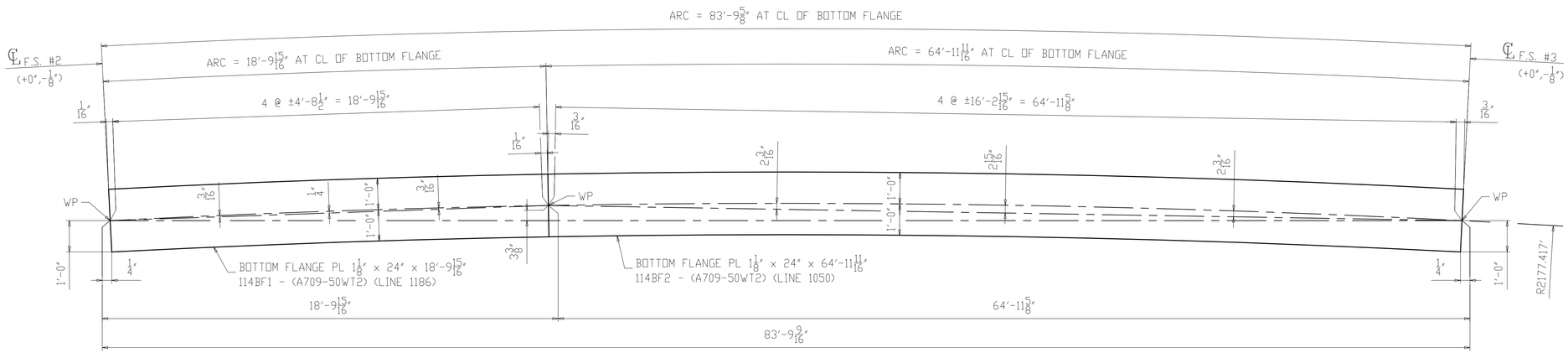

SECTION B-B
(BOTTOM FLANGE)

NOTES:
1. FOR GENERAL NOTES & WELD DETAILS "WB" & "FA" SEE SHEET GN101.
2. ALL MATERIAL A709-50WT2 (UN)
3. T2 - DENOTES MATERIAL SUBJECT TO CHARPY V-NOTCH TEST
- CVN = 15 FT-LBS @ 40°F "H" FREQ FOR THICKNESS UP 2".
- CVN = 20 FT-LBS @ 40°F "H" FREQ FOR THICKNESS OVER 2".

NO.	DATE	REMARKS	BY

REVISIONS

Veritas STEEL
2-EAU CLAIRE, WI 3-WAUSAU, WI 4-PALATKA, FL
TENCA 1605

STRUCTURE	CUY-010-1978R, OH-10 EASTBOUND OVER GCRTA BLUE AND GREEN LINES
LOCATION	CLEVELAND, OHIO CUYAHOGA COUNTY
PROJECT NO.	17-3000
ENGINEER	MICHAEL BAKER INTERNATIONAL
CONTRACTOR	KOKOSING
ITEM	FLANGE DIAGRAM
SURFACE PREP.	SEE P101 OPEN HOLES 1 1/16"Ø (U.N.O.)
PAINT	SEE P101

APPROVAL	DRAWN AM 05/10/19	SHEET NO.	PLANT	ORDER NO.
SHOP	CHECKED DP 06/05/19	BG114B	3	317023A-20

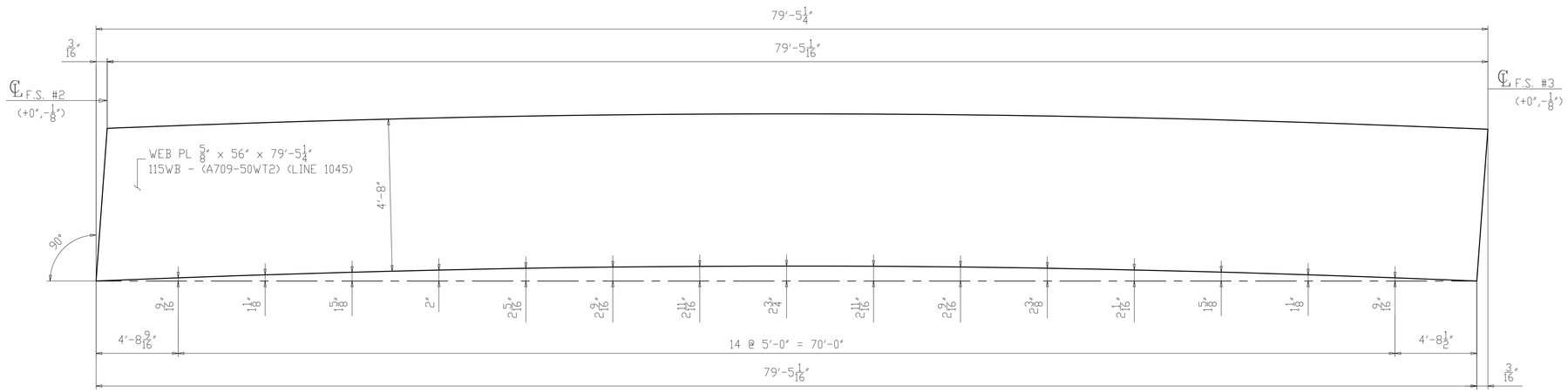

CAMBER DIAGRAM FOR 115C3
(DEVELOPED)

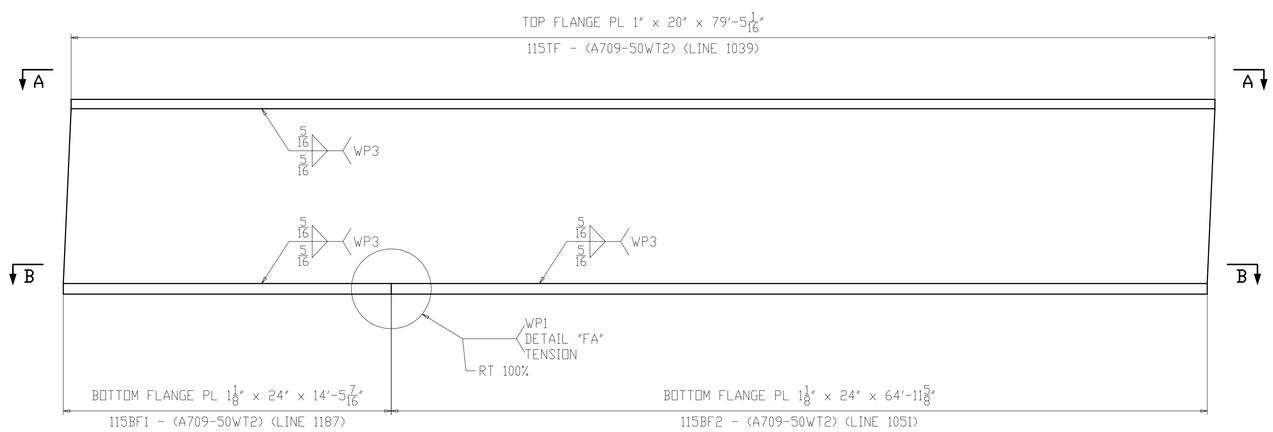

FLANGE DIAGRAM FOR 115C3

NOTES:
1. FOR GENERAL NOTES & WELD DETAILS "WB" & "FA" SEE SHEET GN101.
2. ALL MATERIAL A709-50WT2 (UN)
3. T2 - DENOTES MATERIAL SUBJECT TO CHARPY V-NOTCH TEST
- CVN = 15 FT-LBS @ 40°F "H" FREQ FOR THICKNESS UP 2".
- CVN = 20 FT-LBS @ 40°F "H" FREQ FOR THICKNESS OVER 2".

NO.	DATE	REMARKS	BY

REVISIONS

Veritas STEEL
2-EAU CLAIRE, WI 3-WAUSAU, WI 4-PALATKA, FL
TENCA 1605

STRUCTURE	CUY-010-1978R, OH-10 EASTBOUND OVER GCRTA BLUE AND GREEN LINES
LOCATION	CLEVELAND, OHIO CUYAHOGA COUNTY
PROJECT NO.	17-3000
ENGINEER	MICHAEL BAKER INTERNATIONAL
CONTRACTOR	KOKOSING
ITEM	CAMBER & FLANGES DIAGRAM
SURFACE PREP.	SEE P101 OPEN HOLES 1 1/16"Ø (U.N.O.)
PAINT	SEE P101

APPROVAL	DRAWN AM 05/10/19	SHEET NO.	PLANT	ORDER NO.
SHOP	CHECKED DP 06/05/19	BG115AB	3	317023A-20

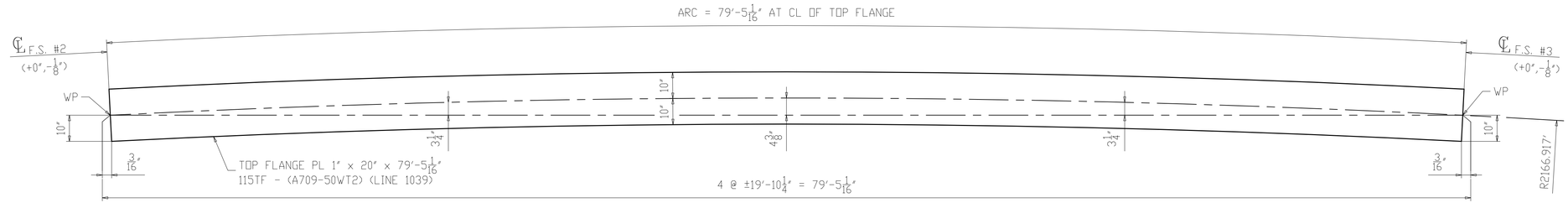

SECTION A-A
(TOP FLANGE)

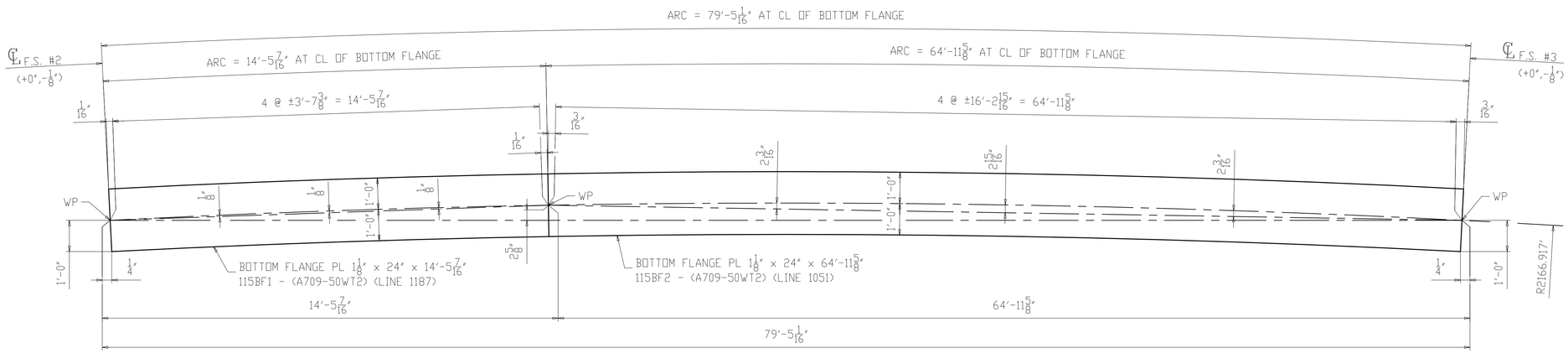

SECTION B-B
(BOTTOM FLANGE)

NOTES:
1. FOR GENERAL NOTES & WELD DETAILS "WB" & "FA" SEE SHEET GN101.
2. ALL MATERIAL A709-50WT2 (UN)
3. T2 - DENOTES MATERIAL SUBJECT TO CHARPY V-NOTCH TEST
- CVN = 15 FT-LBS @ 40°F "H" FREQ FOR THICKNESS UP 2".
- CVN = 20 FT-LBS @ 40°F "H" FREQ FOR THICKNESS OVER 2".

NO.	DATE	REMARKS	BY

REVISIONS

Veritas STEEL
2-EAU CLAIRE, WI 3-WAUSAU, WI 4-PALATKA, FL
IENCA 1605

STRUCTURE	CUY-010-1978R, OH-10 EASTBOUND OVER GCRTA BLUE AND GREEN LINES
LOCATION	CLEVELAND, OHIO CUYAHOGA COUNTY
PROJECT NO.	17-3000
ENGINEER	MICHAEL BAKER INTERNATIONAL
CONTRACTOR	KOKOSING
ITEM	FLANGE DIAGRAM
SURFACE PREP.	SEE P101 OPEN HOLES 1 1/16"Ø (U.N.O.)
PAINT	SEE P101

APPROVAL	DRAWN AM 05/10/19	SHEET NO.	PLANT	ORDER NO.
SHOP	CHECKED DP 06/05/19	BG115B	3	317023A-20

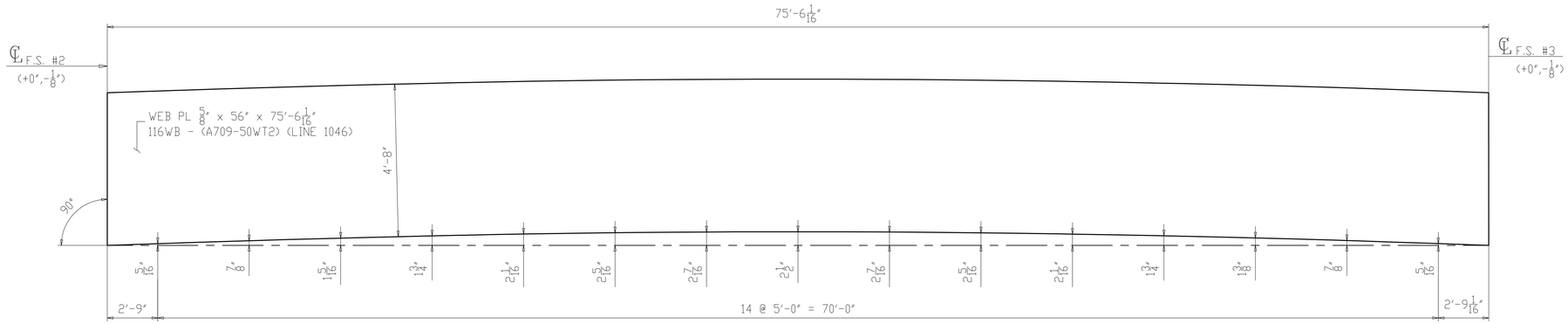

CAMBER DIAGRAM FOR 116D3
(DEVELOPED)

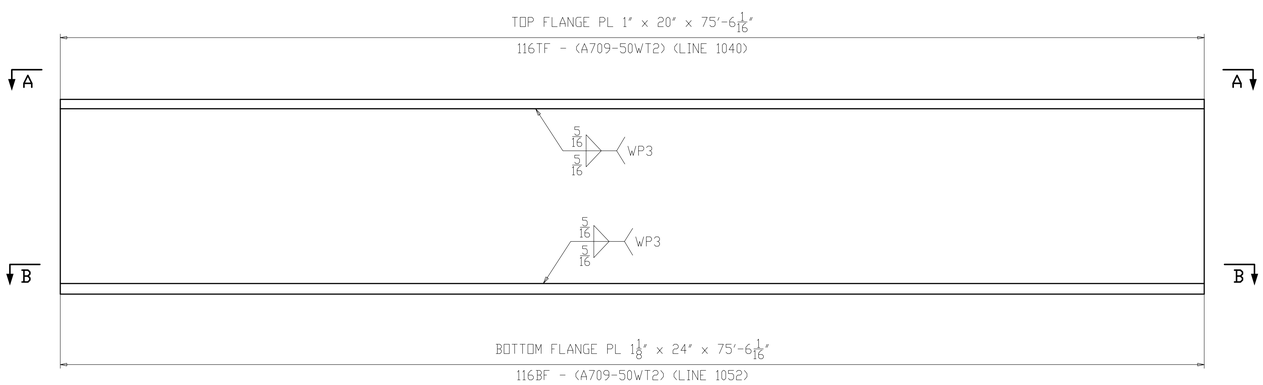

FLANGE DIAGRAM FOR 116D3

NOTES:
1. FOR GENERAL NOTES & WELD DETAILS "WB" & "FA" SEE SHEET GN101.
2. ALL MATERIAL A709-50WT2 (UN)
3. T2 - DENOTES MATERIAL SUBJECT TO CHARPY V-NOTCH TEST
- CVN = 15 FT-LBS @ 40°F "H" FREQ FOR THICKNESS UP 2".
- CVN = 20 FT-LBS @ 40°F "H" FREQ FOR THICKNESS OVER 2".

NO.	DATE	REMARKS	BY

REVISIONS

Veritas STEEL
2-EAU CLAIRE, WI 3-WAUSAU, WI 4-PALATKA, FL
IAS NDT 1605

STRUCTURE	CUY-010-1978R, OH-10 EASTBOUND OVER GCRTA BLUE AND GREEN LINES
LOCATION	CLEVELAND, OHIO CUYAHOGA COUNTY
PROJECT NO.	17-3000
ENGINEER	MICHAEL BAKER INTERNATIONAL
CONTRACTOR	KOKOSING
ITEM	CAMBER & FLANGES DIAGRAM
SURFACE PREP.	SEE P101 OPEN HOLES 1 1/16"Ø (U.N.O.)
PAINT	SEE P101

APPROVAL	DRAWN AM 05/10/19	SHEET NO.	PLANT	ORDER NO.
SHOP	CHECKED DP 06/05/19	BG116AB	3	317023A-20

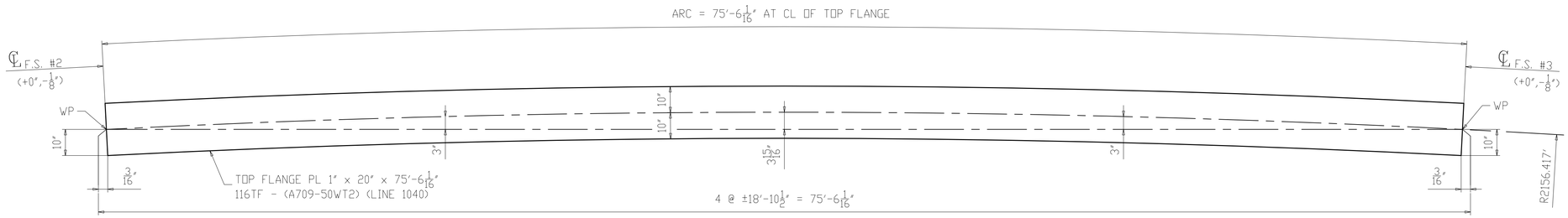

SECTION A-A
(TOP FLANGE)

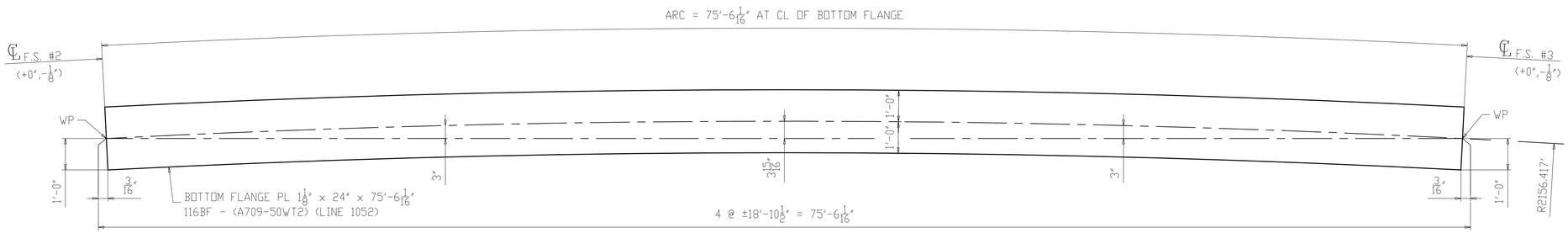

SECTION B-B
(BOTTOM FLANGE)

NOTES:
1. FOR GENERAL NOTES & WELD DETAILS "WB" & "FA" SEE SHEET GN101.
2. ALL MATERIAL A709-50WT2 (UN)
3. T2 - DENOTES MATERIAL SUBJECT TO CHARPY V-NOTCH TEST
- CVN = 15 FT-LBS @ 40°F "H" FREQ FOR THICKNESS UP 2".
- CVN = 20 FT-LBS @ 40°F "H" FREQ FOR THICKNESS OVER 2".

NO.	DATE	REMARKS	BY
△			

REVISIONS

Veritas STEEL
2-EAU CLAIRE, WI 3-WAUSAU, WI 4-PALATKA, FL
IENCA 1605

STRUCTURE	CUY-010-1978R, OH-10 EASTBOUND OVER GCRTA BLUE AND GREEN LINES
LOCATION	CLEVELAND, OHIO CUYAHOGA COUNTY
PROJECT NO.	17-3000
ENGINEER	MICHAEL BAKER INTERNATIONAL
CONTRACTOR	KOKOSING
ITEM	FLANGE DIAGRAM
SURFACE PREP.	SEE P101 OPEN HOLES 1 1/16"Ø (U.N.O.)
PAINT	SEE P101

APPROVAL	DRAWN AM 05/10/19	SHEET NO.	PLANT	ORDER NO.
SHOP	CHECKED DP 06/05/19	BG116B	3	317023A-20

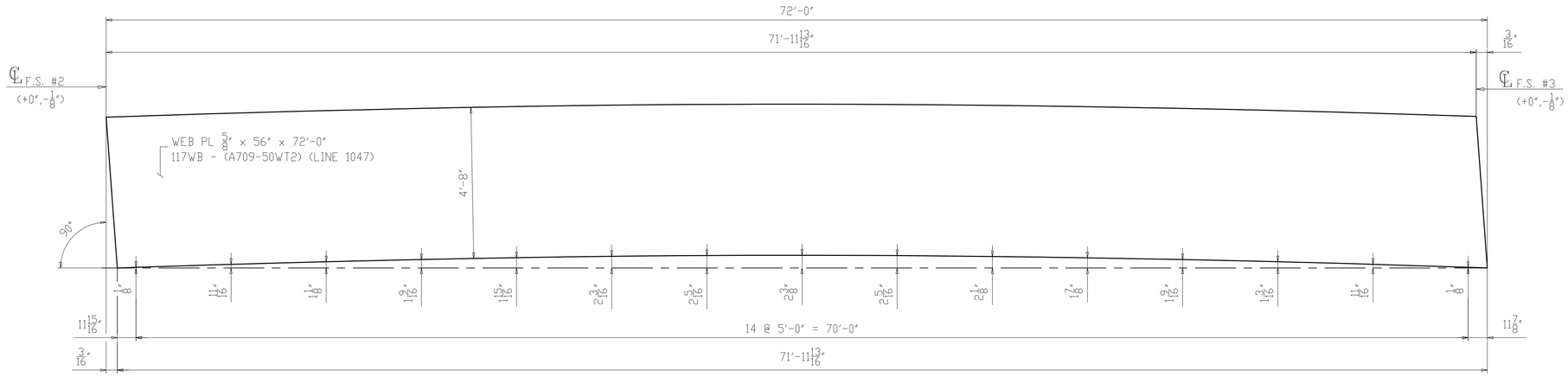

CAMBER DIAGRAM FOR 117E3
(DEVELOPED)

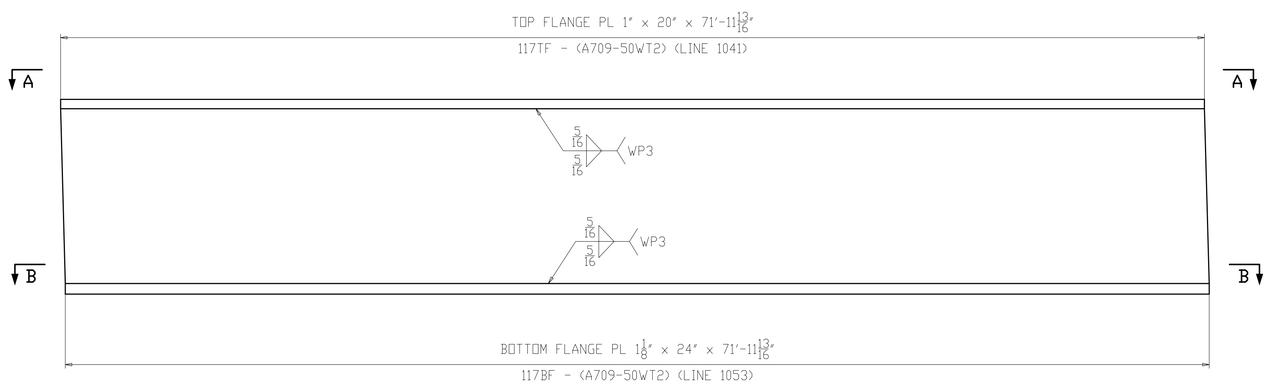

FLANGE DIAGRAM FOR 117E3

NOTES:
1. FOR GENERAL NOTES & WELD DETAILS "WB" & "FA" SEE SHEET GN101.
2. ALL MATERIAL A709-50WT2 (UN)
3. T2 - DENOTES MATERIAL SUBJECT TO CHARPY V-NOTCH TEST
- CVN = 15 FT-LBS @ 40°F "H" FREQ FOR THICKNESS UP 2".
- CVN = 20 FT-LBS @ 40°F "H" FREQ FOR THICKNESS OVER 2".

NO.	DATE	REMARKS	BY

REVISIONS

Veritas STEEL
2-EAU CLAIRE, WI 3-WAUSAU, WI 4-PALATKA, FL
TENCA 1605

STRUCTURE	CUY-010-1978R, OH-10 EASTBOUND OVER GCRTA BLUE AND GREEN LINES
LOCATION	CLEVELAND, OHIO CUYAHOGA COUNTY
PROJECT NO.	17-3000
ENGINEER	MICHAEL BAKER INTERNATIONAL
CONTRACTOR	KOKOSING
ITEM	CAMBER & FLANGES DIAGRAM
SURFACE PREP.	SEE P101 OPEN HOLES 1 1/16"Ø (U.N.O.)
PAINT	SEE P101

APPROVAL	DRAWN AM 05/10/19	SHEET NO.	PLANT	ORDER NO.
SHOP	CHECKED DP 06/05/19	BG117AB	3	317023A-20

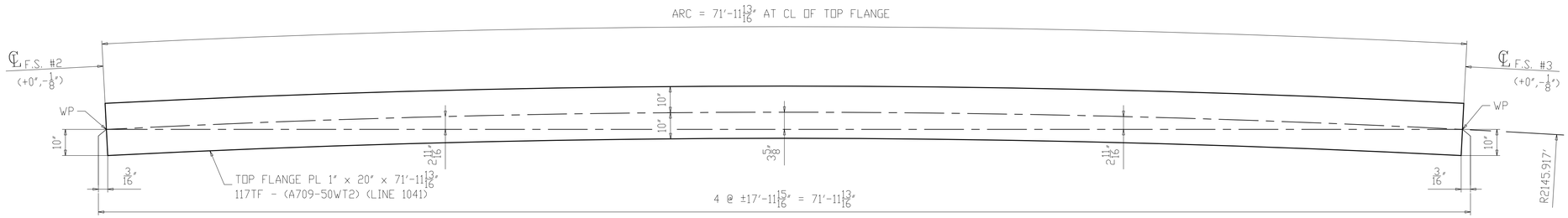

SECTION A-A
(TOP FLANGE)

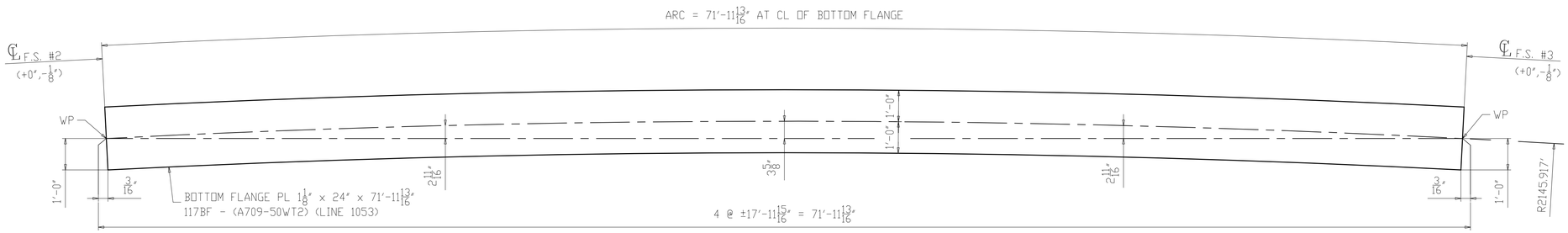

SECTION B-B
(BOTTOM FLANGE)

NOTES:
1. FOR GENERAL NOTES & WELD DETAILS "WB" & "FA" SEE SHEET GN101.
2. ALL MATERIAL A709-50WT2 (UN)
3. T2 - DENOTES MATERIAL SUBJECT TO CHARPY V-NOTCH TEST
- CVN = 15 FT-LBS @ 40°F "H" FREQ FOR THICKNESS UP 2".
- CVN = 20 FT-LBS @ 40°F "H" FREQ FOR THICKNESS OVER 2".

NO.	DATE	REMARKS	BY
△			

REVISIONS

Veritas STEEL
2-EAU CLAIRE, WI 3-WAUSAU, WI 4-PALATKA, FL
IENCA 1605

STRUCTURE	CUY-010-1978R, OH-10 EASTBOUND OVER GCRTA BLUE AND GREEN LINES
LOCATION	CLEVELAND, OHIO CUYAHOGA COUNTY
PROJECT NO.	17-3000
ENGINEER	MICHAEL BAKER INTERNATIONAL
CONTRACTOR	KOKOSING
ITEM	FLANGE DIAGRAM
SURFACE PREP.	SEE P101 OPEN HOLES 1 1/16"Ø (U.N.O.)
PAINT	SEE P101

APPROVAL	DRAWN AM 05/10/19	SHEET NO.	PLANT	ORDER NO.
SHOP	CHECKED DP 06/05/19	BG117B	3	317023A-20

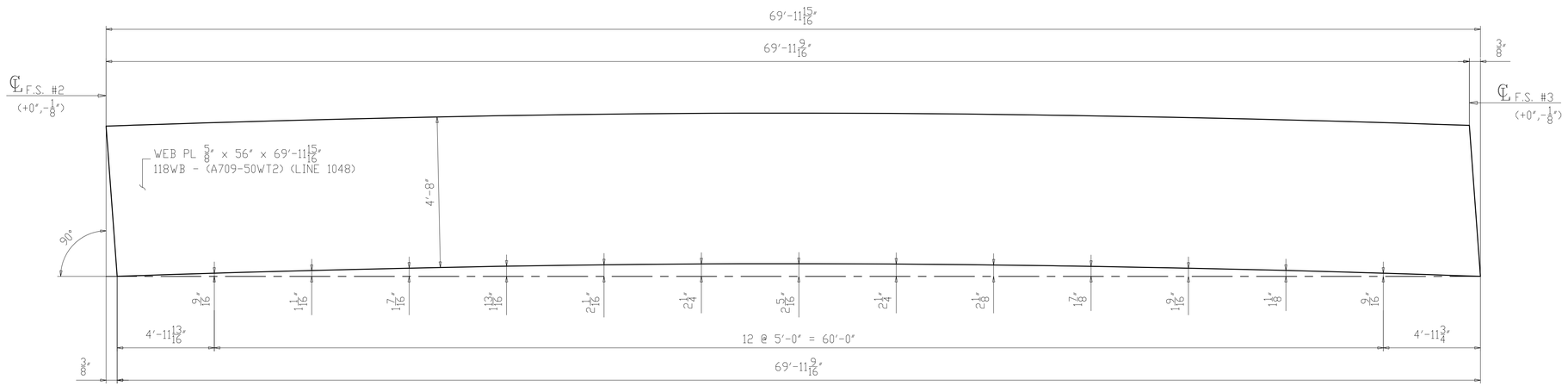

CAMBER DIAGRAM FOR 118F3
(DEVELOPED)

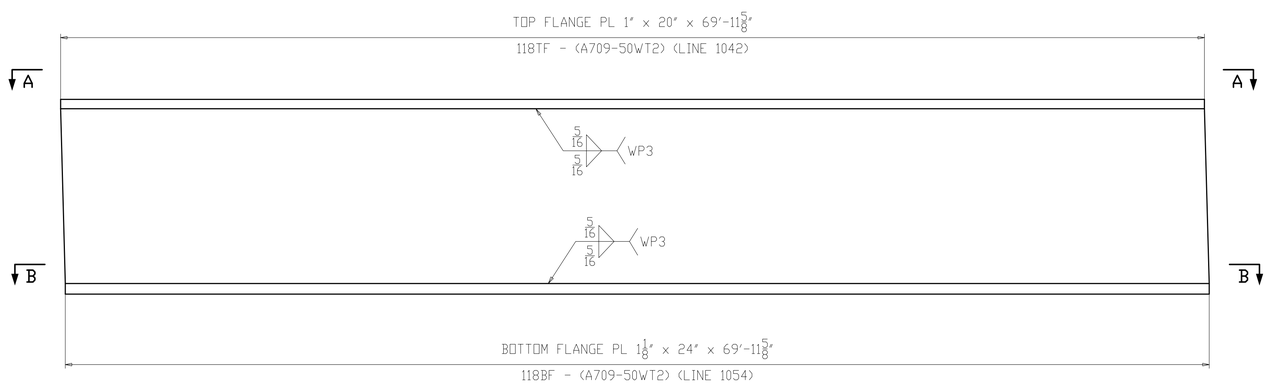

FLANGE DIAGRAM FOR 118F3

NOTES:
1. FOR GENERAL NOTES & WELD DETAILS "WB" & "FA" SEE SHEET GN101.
2. ALL MATERIAL A709-50WT2 (UN)
3. T2 - DENOTES MATERIAL SUBJECT TO CHARPY V-NOTCH TEST
- CVN = 15 FT-LBS @ 40°F "H" FREQ FOR THICKNESS UP 2".
- CVN = 20 FT-LBS @ 40°F "H" FREQ FOR THICKNESS OVER 2".

NO.	DATE	REMARKS	BY

REVISIONS

Veritas STEEL
2-EAU CLAIRE, WI 3-WAUSAU, WI 4-PALATKA, FL
TENCA 1605

STRUCTURE	CUY-010-1978R, OH-10 EASTBOUND OVER GCRTA BLUE AND GREEN LINES
LOCATION	CLEVELAND, OHIO CUYAHOGA COUNTY
PROJECT NO.	17-3000
ENGINEER	MICHAEL BAKER INTERNATIONAL
CONTRACTOR	KOKOSING
ITEM	CAMBER & FLANGES DIAGRAM
SURFACE PREP.	SEE P101
OPEN HOLES	1 1/16"Ø (U.N.O.)
PAINT	SEE P101

APPROVAL	DRAWN AM 05/10/19	SHEET NO.	PLANT	ORDER NO.
SHOP	CHECKED DP 06/05/19	BG118AB	3	317023A-20

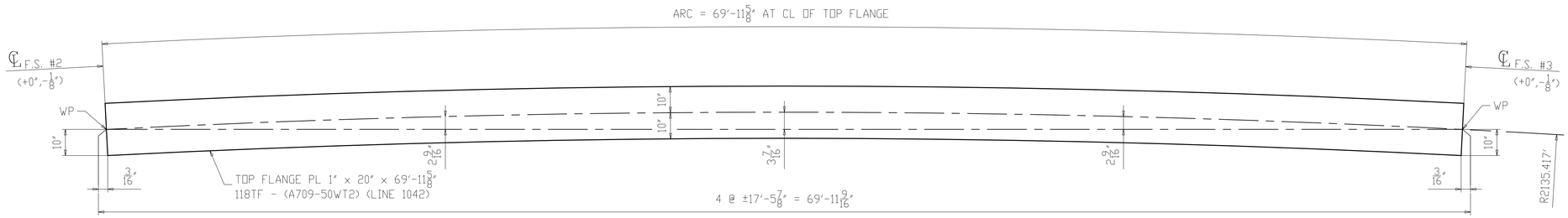

SECTION A-A
(TOP FLANGE)

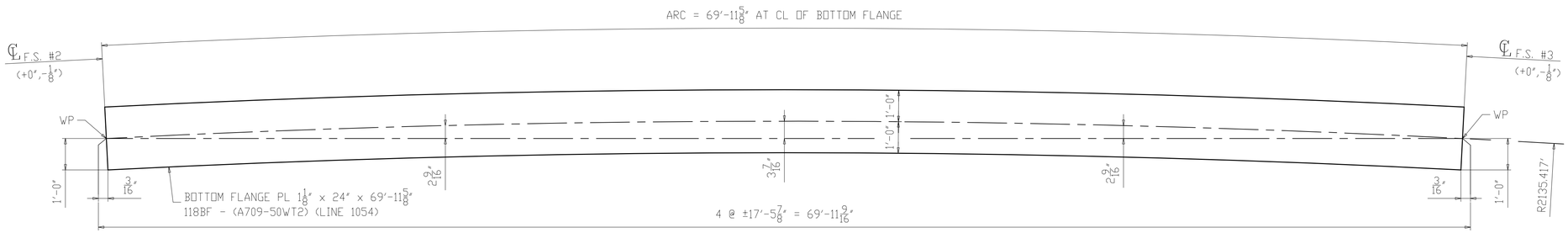

SECTION B-B
(BOTTOM FLANGE)

NOTES:
1. FOR GENERAL NOTES & WELD DETAILS "WB" & "FA" SEE SHEET GN101.
2. ALL MATERIAL A709-50WT2 (UN)
3. T2 - DENOTES MATERIAL SUBJECT TO CHARPY V-NOTCH TEST
- CVN = 15 FT-LBS @ 40°F "H" FREQ FOR THICKNESS UP 2".
- CVN = 20 FT-LBS @ 40°F "H" FREQ FOR THICKNESS OVER 2".

NO.	DATE	REMARKS	BY
△			

REVISIONS

Veritas STEEL
2-EAU CLAIRE, WI 3-WAUSAU, WI 4-PALATKA, FL
IENCA 1605

STRUCTURE	CUY-010-1978R, OH-10 EASTBOUND OVER GCRTA BLUE AND GREEN LINES
LOCATION	CLEVELAND, OHIO CUYAHOGA COUNTY
PROJECT NO.	17-3000
ENGINEER	MICHAEL BAKER INTERNATIONAL
CONTRACTOR	KOKOSING
ITEM	FLANGE DIAGRAM
SURFACE PREP.	SEE P101 OPEN HOLES 1 1/16"Ø (U.N.O.)
PAINT	SEE P101

APPROVAL	DRAWN AM 05/10/19	SHEET NO.	PLANT	ORDER NO.
SHOP	CHECKED DP 06/05/19	BG118B	3	317023A-20

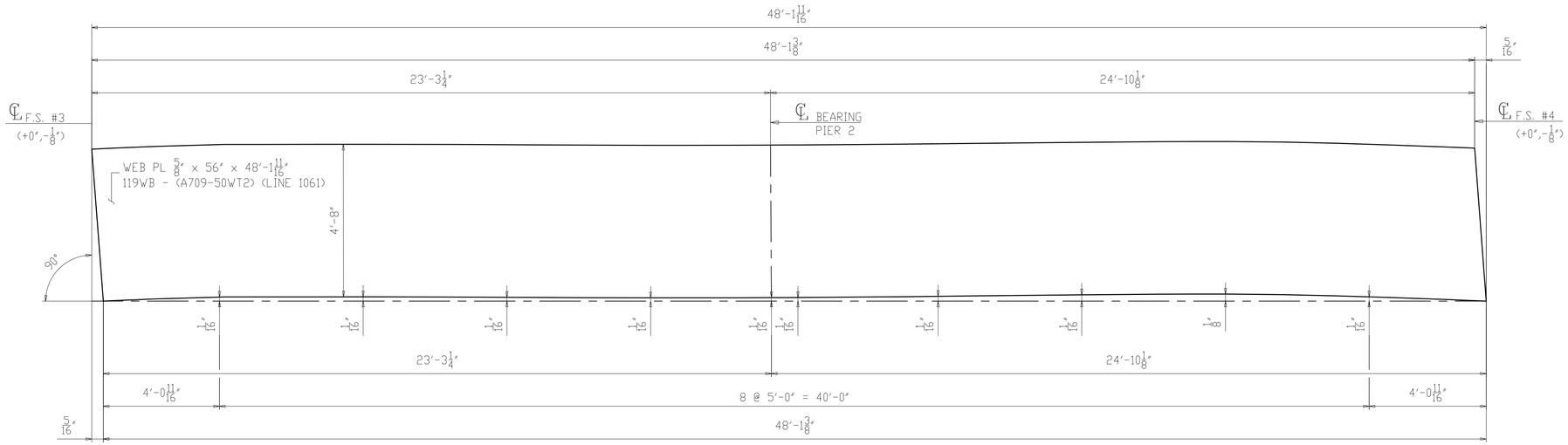

CAMBER DIAGRAM FOR 119A4
(DEVELOPED)

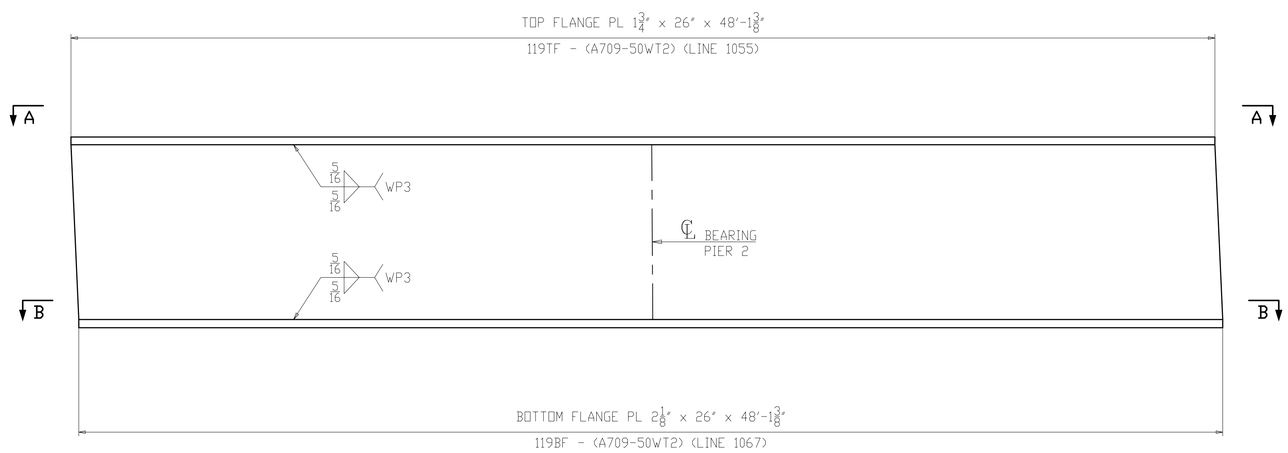

FLANGE DIAGRAM FOR 119A4

NOTES:
1. FOR GENERAL NOTES & WELD DETAILS "WB" & "FA" SEE SHEET GN101.
2. ALL MATERIAL A709-50WT2 (UN)
3. T2 - DENOTES MATERIAL SUBJECT TO CHARPY V-NOTCH TEST
- CVN = 15 FT-LBS @ 40°F "H" FREQ FOR THICKNESS UP 2".
- CVN = 20 FT-LBS @ 40°F "H" FREQ FOR THICKNESS OVER 2".

NO.	DATE	REMARKS	BY

REVISIONS

Veritas STEEL
2-EAU CLAIRE, WI 3-WAUSAU, WI 4-PALATKA, FL
TENCA 1605

STRUCTURE	CUY-010-1978R, OH-10 EASTBOUND OVER GCRTA BLUE AND GREEN LINES
LOCATION	CLEVELAND, OHIO CUYAHOGA COUNTY
PROJECT NO.	17-3000
ENGINEER	MICHAEL BAKER INTERNATIONAL
CONTRACTOR	KOKOSING
ITEM	CAMBER & FLANGES DIAGRAM
SURFACE PREP.	SEE P101 OPEN HOLES 1 1/16"Ø (U.N.O.)
PAINT	SEE P101

APPROVAL	DRAWN AM 05/10/19	SHEET NO.	PLANT	ORDER NO.
SHOP	CHECKED DP 06/05/19	BG119AB	3	317023A-20

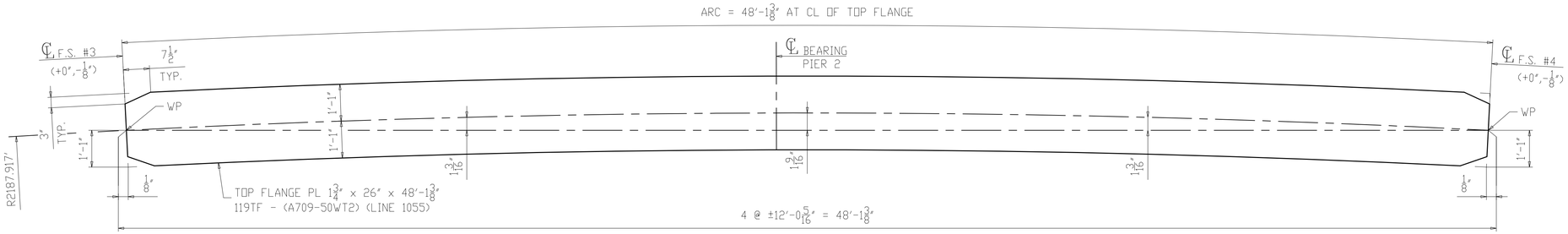

SECTION A-A
(TOP FLANGE)

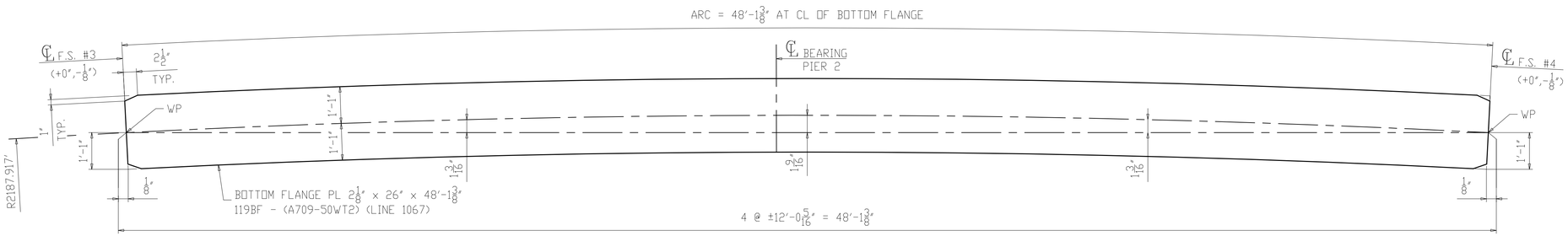

SECTION B-B
(BOTTOM FLANGE)

NOTES:
1. FOR GENERAL NOTES & WELD DETAILS "WB" & "FA" SEE SHEET GN101.
2. ALL MATERIAL A709-50WT2 (UN)
3. T2 - DENOTES MATERIAL SUBJECT TO CHARPY V-NOTCH TEST
- CVN = 15 FT-LBS @ 40°F "H" FREQ FOR THICKNESS UP 2".
- CVN = 20 FT-LBS @ 40°F "H" FREQ FOR THICKNESS OVER 2".

NO.	DATE	REMARKS	BY
△			

REVISIONS

Veritas STEEL
2-EAU CLAIRE, WI 3-WAUSAU, WI 4-PALATKA, FL

STRUCTURE	CUY-010-1978R, OH-10 EASTBOUND OVER GCRTA BLUE AND GREEN LINES
LOCATION	CLEVELAND, OHIO CUYAHOGA COUNTY
PROJECT NO.	17-3000
ENGINEER	MICHAEL BAKER INTERNATIONAL
CONTRACTOR	KOKOSING
ITEM	FLANGE DIAGRAM
SURFACE PREP.	SEE P101 OPEN HOLES 1 1/16"Ø (U.N.O.)
PAINT	SEE P101

APPROVAL	DRAWN AM 05/10/19	SHEET NO.	PLANT	ORDER NO.
SHOP	CHECKED DP 06/05/19	BG119B	3	317023A-20

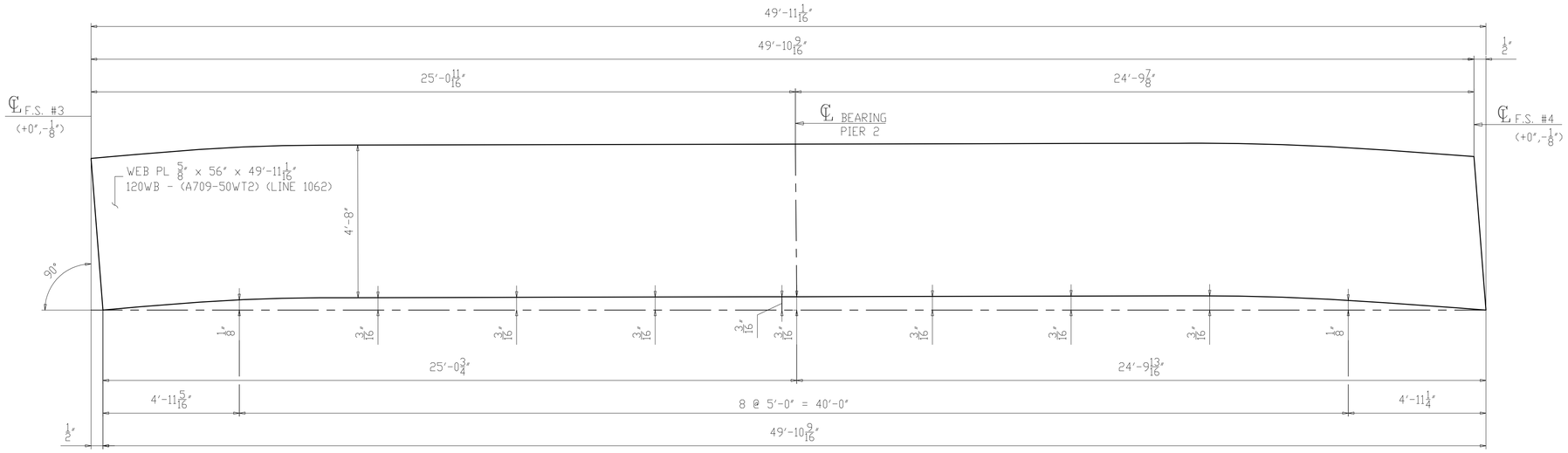

CAMBER DIAGRAM FOR 120B4
(DEVELOPED)

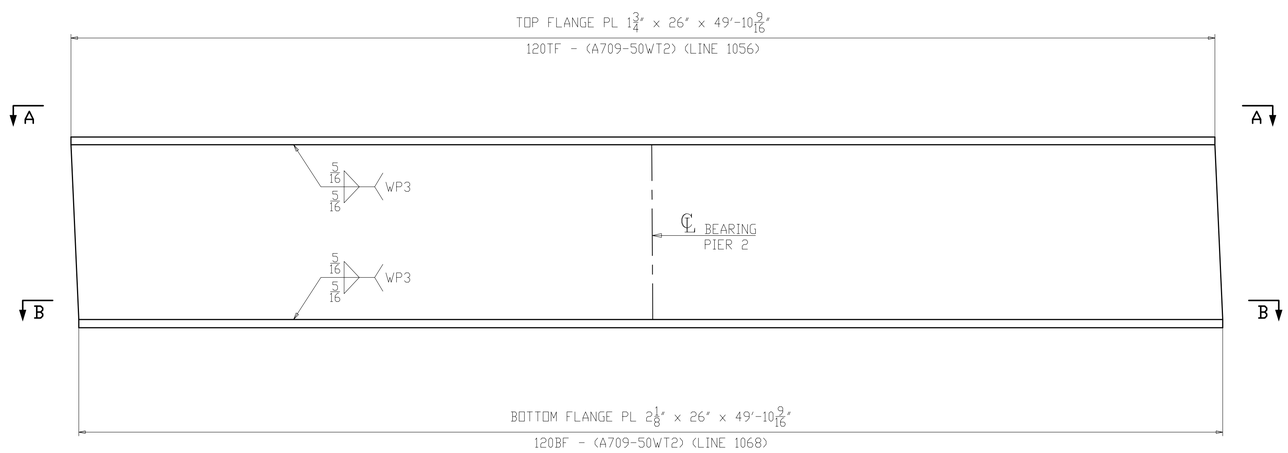

FLANGE DIAGRAM FOR 120B4

NOTES:
1. FOR GENERAL NOTES & WELD DETAILS "WB" & "FA" SEE SHEET GN101.
2. ALL MATERIAL A709-50WT2 (UN)
3. T2 - DENOTES MATERIAL SUBJECT TO CHARPY V-NOTCH TEST
- CVN = 15 FT-LBS @ 40°F "H" FREQ FOR THICKNESS UP 2".
- CVN = 20 FT-LBS @ 40°F "H" FREQ FOR THICKNESS OVER 2".

NO.	DATE	REMARKS	BY

REVISIONS

Veritas STEEL
2-EAU CLAIRE, WI 3-WAUSAU, WI 4-PALATKA, FL
TENCA 1605

STRUCTURE	CUY-010-1978R, OH-10 EASTBOUND OVER GCRTA BLUE AND GREEN LINES
LOCATION	CLEVELAND, OHIO CUYAHOGA COUNTY
PROJECT NO.	17-3000
ENGINEER	MICHAEL BAKER INTERNATIONAL
CONTRACTOR	KOKOSING
ITEM	CAMBER & FLANGES DIAGRAM
SURFACE PREP.	SEE P101
OPEN HOLES	1 1/16"Ø (U.N.O.)
PAINT	SEE P101

APPROVAL	DRAWN AM 05/10/19	SHEET NO.	PLANT	ORDER NO.
SHOP	CHECKED DP 06/05/19	BG120AB	3	317023A-20

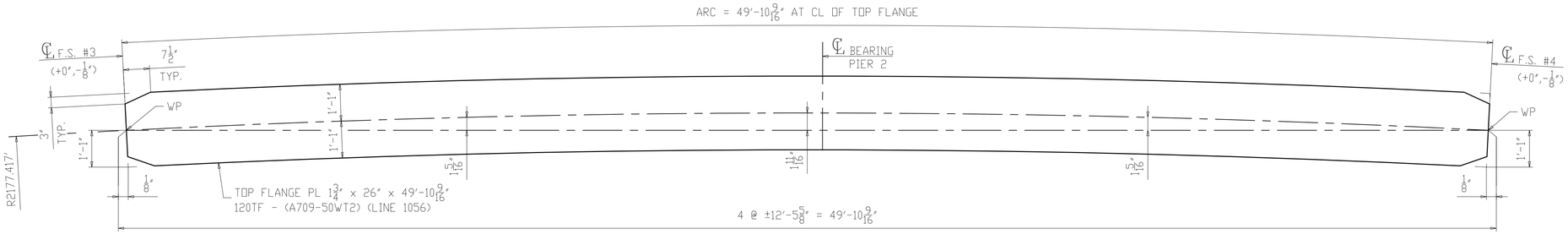

SECTION A-A
(TOP FLANGE)

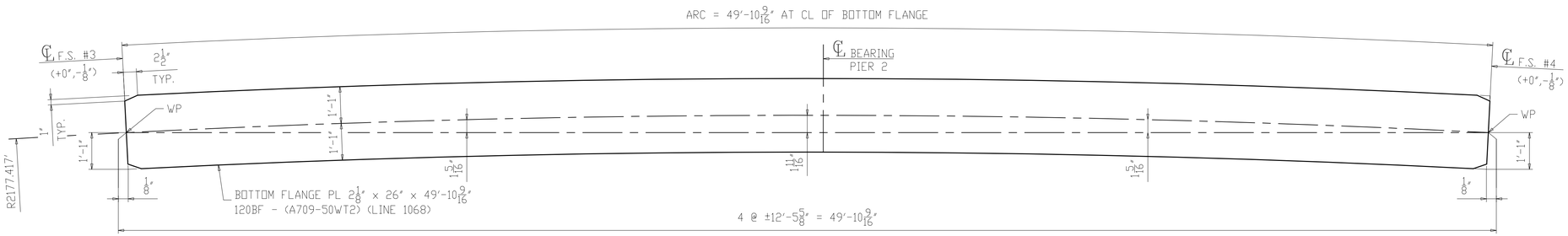

SECTION B-B
(BOTTOM FLANGE)

NOTES:
1. FOR GENERAL NOTES & WELD DETAILS "WB" & "FA" SEE SHEET GN101.
2. ALL MATERIAL A709-50WT2 (UN)
3. T2 - DENOTES MATERIAL SUBJECT TO CHARPY V-NOTCH TEST
- CVN = 15 FT-LBS @ 40°F "H" FREQ FOR THICKNESS UP 2".
- CVN = 20 FT-LBS @ 40°F "H" FREQ FOR THICKNESS OVER 2".

NO.	DATE	REMARKS	BY
△			

REVISIONS

Veritas STEEL
2-EAU CLAIRE, WI 3-WAUSAU, WI 4-PALATKA, FL
TENCA 1605

STRUCTURE	CUY-010-1978R, OH-10 EASTBOUND OVER GCRTA BLUE AND GREEN LINES
LOCATION	CLEVELAND, OHIO CUYAHOGA COUNTY
PROJECT NO.	17-3000
ENGINEER	MICHAEL BAKER INTERNATIONAL
CONTRACTOR	KOKOSING
ITEM	FLANGE DIAGRAM
SURFACE PREP.	SEE P101 OPEN HOLES 1 1/16"Ø (U.N.O.)
PAINT	SEE P101

APPROVAL	DRAWN AM 05/10/19	SHEET NO.	PLANT	ORDER NO.
SHOP	CHECKED DP 06/05/19	BG120B	3	317023A-20

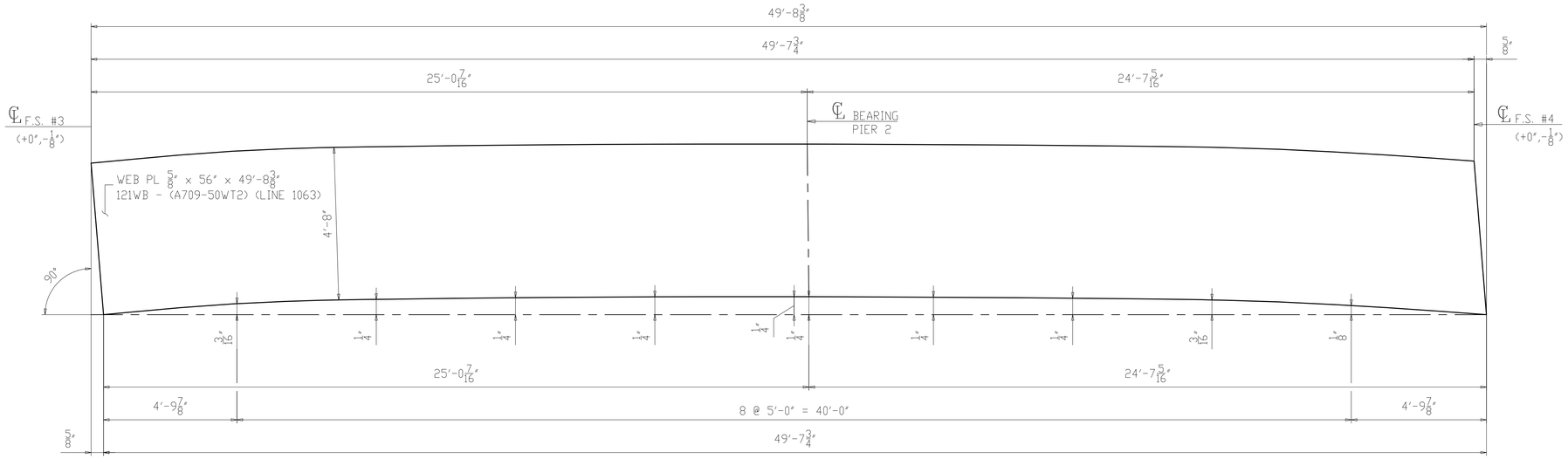

CAMBER DIAGRAM FOR 121C4
(DEVELOPED)

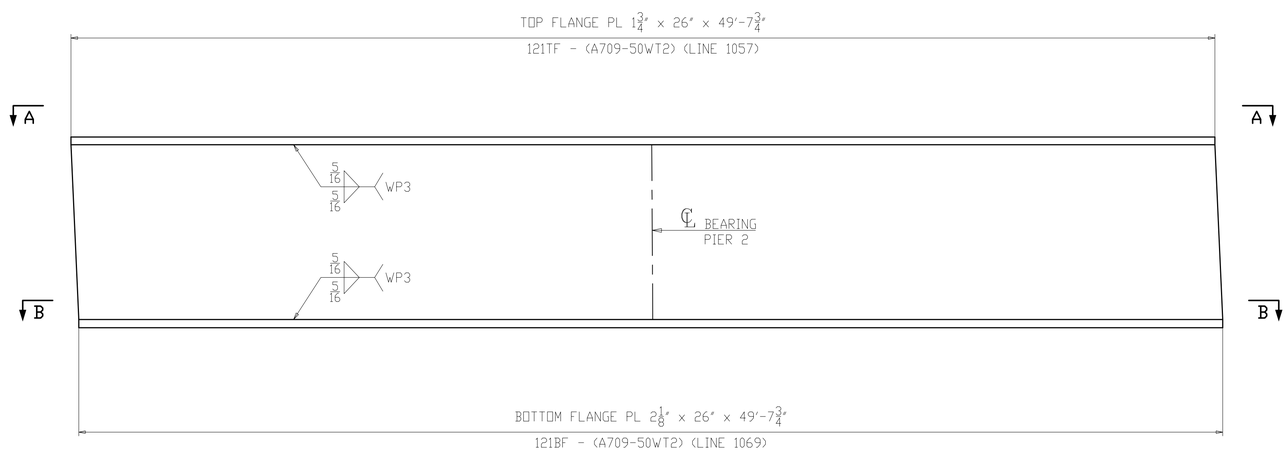

FLANGE DIAGRAM FOR 121C4

NOTES:
1. FOR GENERAL NOTES & WELD DETAILS "WB" & "FA" SEE SHEET GN101.
2. ALL MATERIAL A709-50WT2 (UN)
3. T2 - DENOTES MATERIAL SUBJECT TO CHARPY V-NOTCH TEST
- CVN = 15 FT-LBS @ 40°F "H" FREQ FOR THICKNESS UP 2".
- CVN = 20 FT-LBS @ 40°F "H" FREQ FOR THICKNESS OVER 2".

NO.	DATE	REMARKS	BY

REVISIONS

Veritas STEEL
2-EAU CLAIRE, WI 3-WAUSAU, WI 4-PALATKA, FL
TENCA 1605

STRUCTURE	CUY-010-1978R, OH-10 EASTBOUND OVER GCRTA BLUE AND GREEN LINES
LOCATION	CLEVELAND, OHIO CUYAHOGA COUNTY
PROJECT NO.	17-3000
ENGINEER	MICHAEL BAKER INTERNATIONAL
CONTRACTOR	KOKOSING
ITEM	CAMBER & FLANGES DIAGRAM
SURFACE PREP.	SEE P101 OPEN HOLES 1 1/16"Ø (U.N.O.)
PAINT	SEE P101

APPROVAL	DRAWN AM 05/10/19	SHEET NO.	PLANT	ORDER NO.
SHOP	CHECKED DP 06/05/19	BG121AB	3	317023A-20

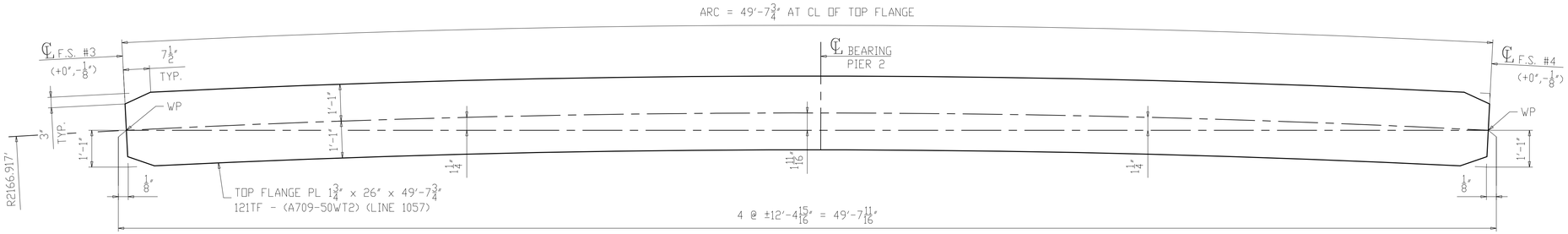

SECTION A-A
(TOP FLANGE)

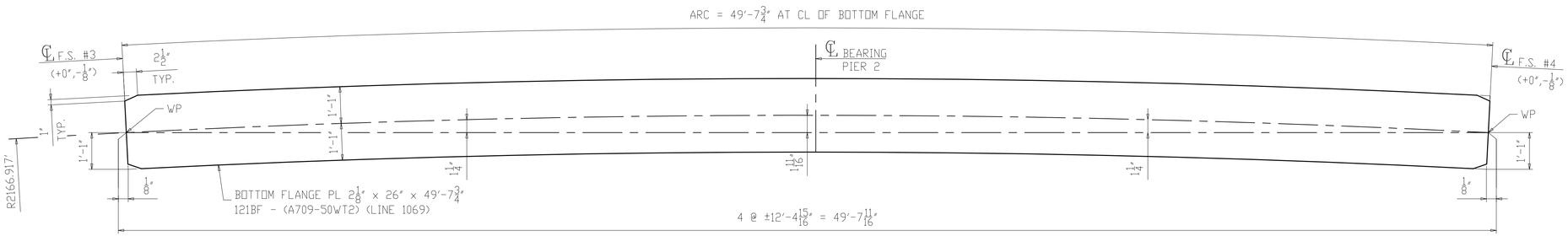

SECTION B-B
(BOTTOM FLANGE)

NOTES:
1. FOR GENERAL NOTES & WELD DETAILS "WB" & "FA" SEE SHEET GN101.
2. ALL MATERIAL A709-50WT2 (UN)
3. T2 - DENOTES MATERIAL SUBJECT TO CHARPY V-NOTCH TEST
- CVN = 15 FT-LBS @ 40°F "H" FREQ FOR THICKNESS UP 2".
- CVN = 20 FT-LBS @ 40°F "H" FREQ FOR THICKNESS OVER 2".

NO.	DATE	REMARKS	BY
△			

REVISIONS

Veritas STEEL
2-EAU CLAIRE, WI 3-WAUSAU, WI 4-PALATKA, FL

STRUCTURE	CUY-010-1978R, OH-10 EASTBOUND OVER GCRTA BLUE AND GREEN LINES
LOCATION	CLEVELAND, OHIO CUYAHOGA COUNTY
PROJECT NO.	17-3000
ENGINEER	MICHAEL BAKER INTERNATIONAL
CONTRACTOR	KOKOSING
ITEM	FLANGE DIAGRAM
SURFACE PREP.	SEE P101 OPEN HOLES 1 1/16"Ø (U.N.O.)
PAINT	SEE P101

APPROVAL	DRAWN AM 05/10/19	SHEET NO.	PLANT	ORDER NO.
SHOP	CHECKED DP 06/05/19	BG121B	3	317023A-20

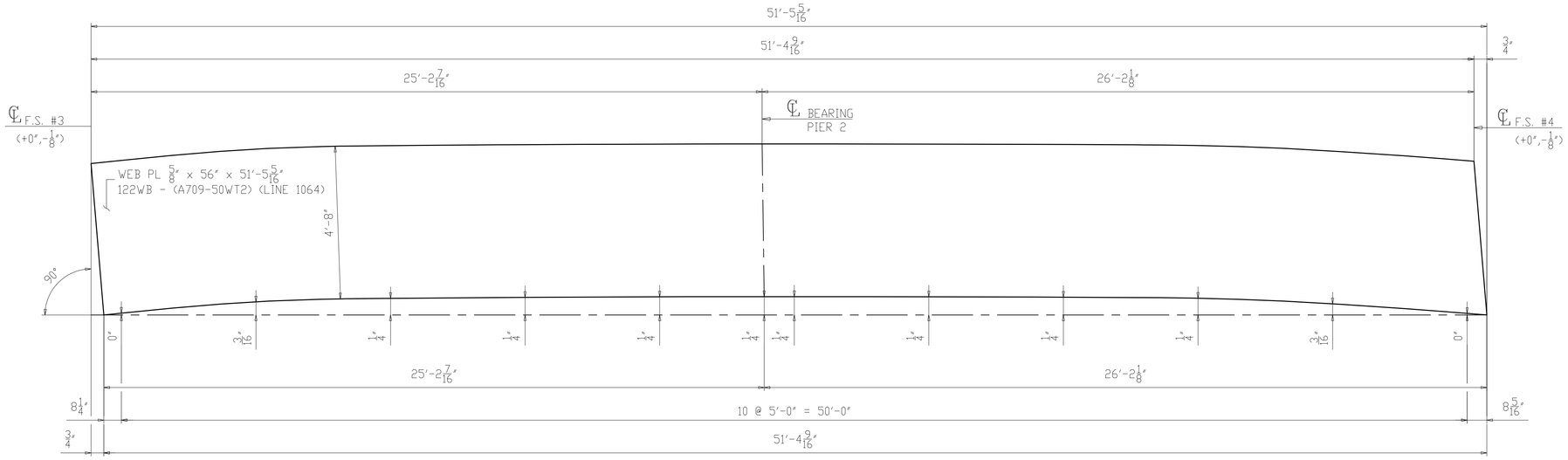

CAMBER DIAGRAM FOR 122D4
(DEVELOPED)

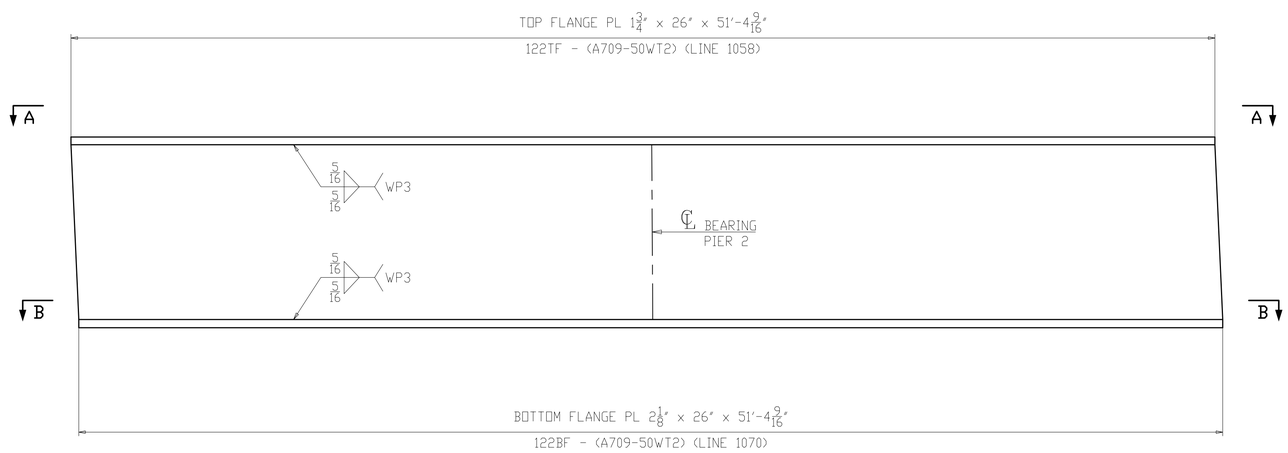

FLANGE DIAGRAM FOR 122D4

NOTES:
1. FOR GENERAL NOTES & WELD DETAILS "WB" & "FA" SEE SHEET GN101.
2. ALL MATERIAL A709-50WT2 (UN)
3. T2 - DENOTES MATERIAL SUBJECT TO CHARPY V-NOTCH TEST
- CVN = 15 FT-LBS @ 40°F "H" FREQ FOR THICKNESS UP 2".
- CVN = 20 FT-LBS @ 40°F "H" FREQ FOR THICKNESS OVER 2".

NO.	DATE	REMARKS	BY

REVISIONS

Veritas STEEL
2-EAU CLAIRE, WI 3-WAUSAU, WI 4-PALATKA, FL
TENCA 1605

STRUCTURE	CUY-010-1978R, OH-10 EASTBOUND OVER GCRTA BLUE AND GREEN LINES
LOCATION	CLEVELAND, OHIO CUYAHOGA COUNTY
PROJECT NO.	17-3000
ENGINEER	MICHAEL BAKER INTERNATIONAL
CONTRACTOR	KOKOSING
ITEM	CAMBER & FLANGES DIAGRAM
SURFACE PREP.	SEE P101 OPEN HOLES 1 1/16"Ø (U.N.O.)
PAINT	SEE P101

APPROVAL	DRAWN AM 05/10/19	SHEET NO.	PLANT	ORDER NO.
SHOP	CHECKED DP 06/05/19	BG122AB	3	317023A-20

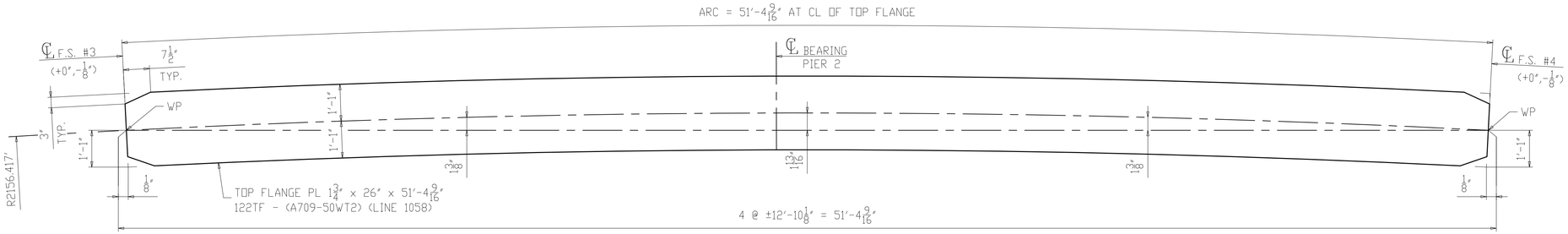

SECTION A-A
(TOP FLANGE)

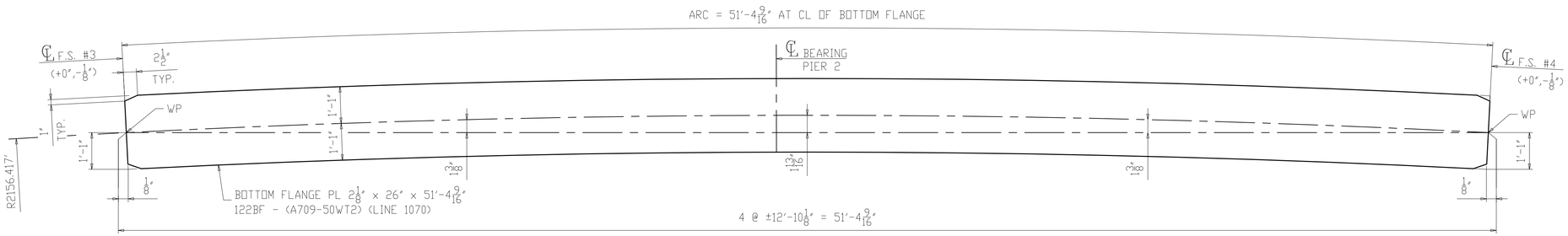

SECTION B-B
(BOTTOM FLANGE)

NOTES:
1. FOR GENERAL NOTES & WELD DETAILS "WB" & "FA" SEE SHEET GN101.
2. ALL MATERIAL A709-50WT2 (UN)
3. T2 - DENOTES MATERIAL SUBJECT TO CHARPY V-NOTCH TEST
- CVN = 15 FT-LBS @ 40°F "H" FREQ FOR THICKNESS UP 2".
- CVN = 20 FT-LBS @ 40°F "H" FREQ FOR THICKNESS OVER 2".

NO.	DATE	REMARKS	BY
△			

REVISIONS

Veritas STEEL
2-EAU CLAIRE, WI 3-WAUSAU, WI 4-PALATKA, FL

STRUCTURE	CUY-010-1978R, OH-10 EASTBOUND OVER GCRTA BLUE AND GREEN LINES
LOCATION	CLEVELAND, OHIO CUYAHOGA COUNTY
PROJECT NO.	17-3000
ENGINEER	MICHAEL BAKER INTERNATIONAL
CONTRACTOR	KOKOSING
ITEM	FLANGE DIAGRAM
SURFACE PREP.	SEE P101 OPEN HOLES 1 1/16"Ø (U.N.O.)
PAINT	SEE P101

APPROVAL	DRAWN AM 05/10/19	SHEET NO.	PLANT	ORDER NO.
SHOP	CHECKED DP 06/05/19	BG122B	3	317023A-20

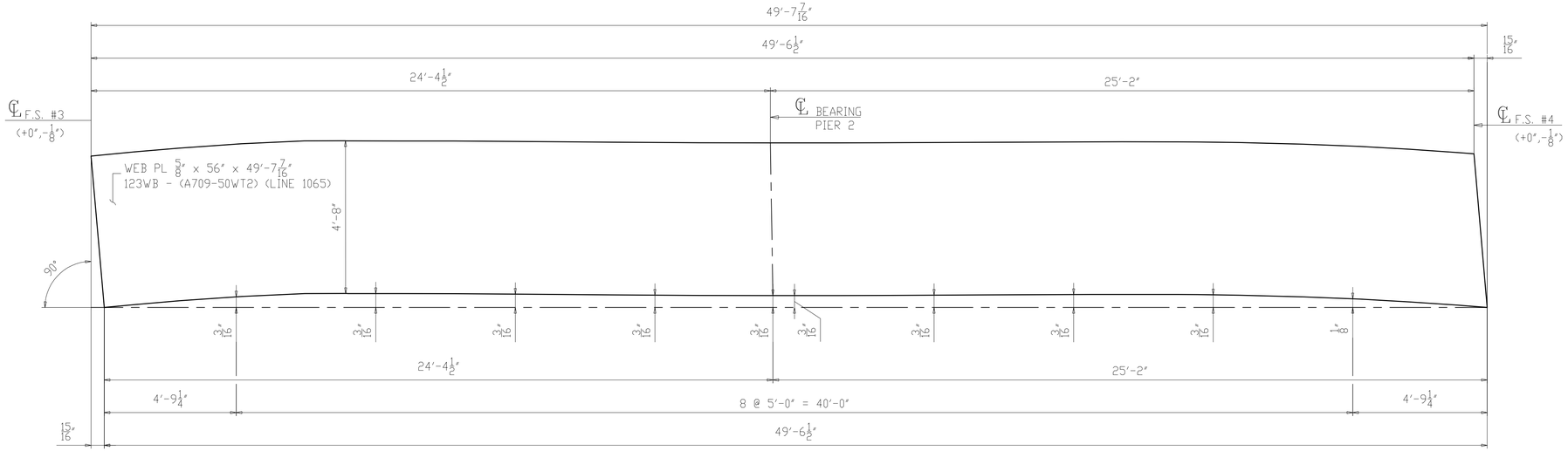

CAMBER DIAGRAM FOR 123E4
(DEVELOPED)

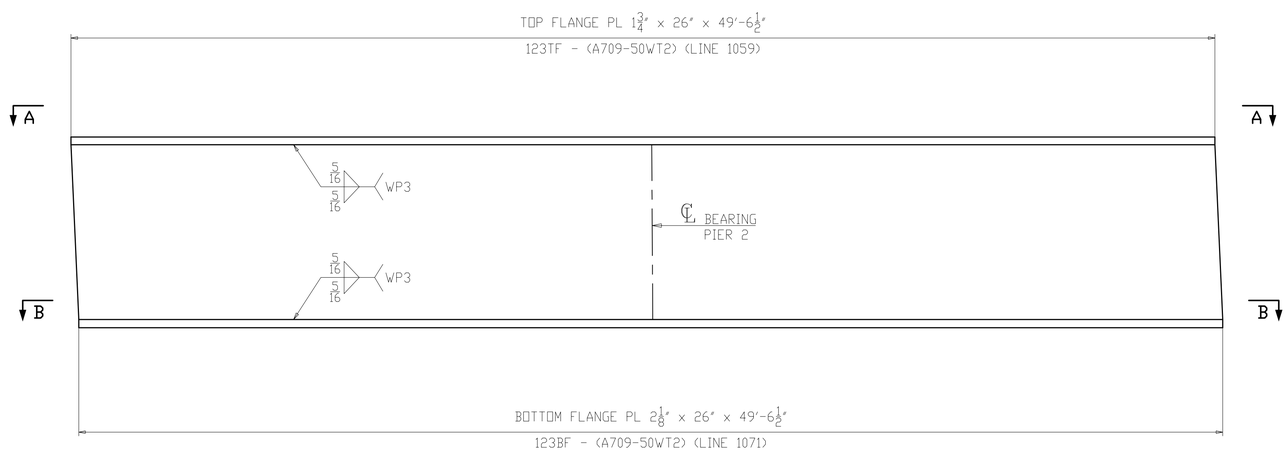

FLANGE DIAGRAM FOR 123E4

NOTES:
1. FOR GENERAL NOTES & WELD DETAILS "WB" & "FA" SEE SHEET GN101.
2. ALL MATERIAL A709-50WT2 (UN)
3. T2 - DENOTES MATERIAL SUBJECT TO CHARPY V-NOTCH TEST
- CVN = 15 FT-LBS @ 40°F "H" FREQ FOR THICKNESS UP 2".
- CVN = 20 FT-LBS @ 40°F "H" FREQ FOR THICKNESS OVER 2".

NO.	DATE	REMARKS	BY

REVISIONS

Veritas STEEL
2-EAU CLAIRE, WI 3-WAUSAU, WI 4-PALATKA, FL
TENCA 1605

STRUCTURE	CUY-010-1978R, OH-10 EASTBOUND OVER GCRTA BLUE AND GREEN LINES
LOCATION	CLEVELAND, OHIO CUYAHOGA COUNTY
PROJECT NO.	17-3000
ENGINEER	MICHAEL BAKER INTERNATIONAL
CONTRACTOR	KOKOSING
ITEM	CAMBER & FLANGES DIAGRAM
SURFACE PREP.	SEE P101 OPEN HOLES 1 1/16"Ø (U.N.O.)
PAINT	SEE P101

APPROVAL	DRAWN AM 05/10/19	SHEET NO.	PLANT	ORDER NO.
SHOP	CHECKED DP 06/05/19	BG123AB	3	317023A-20

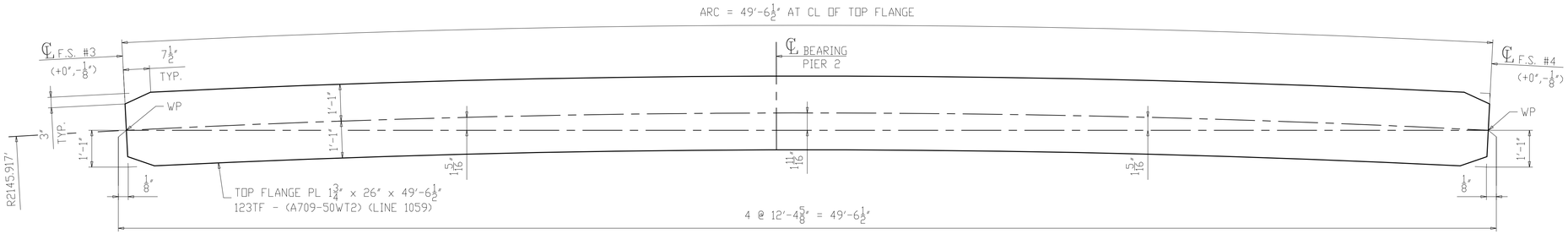

SECTION A-A
(TOP FLANGE)

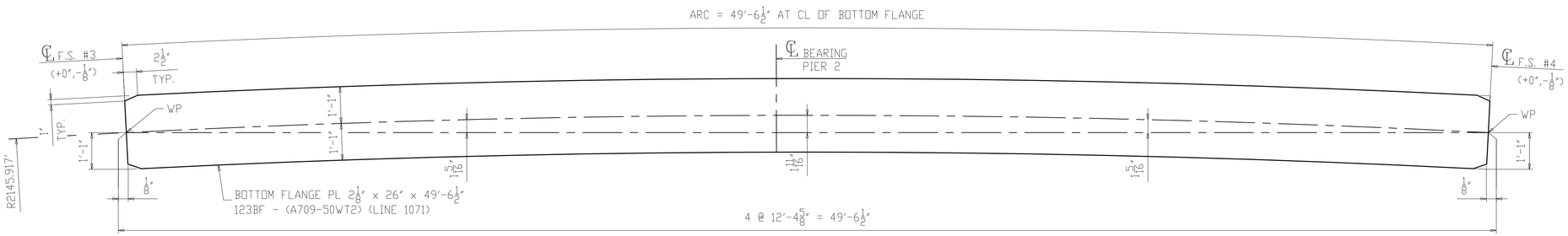

SECTION B-B
(BOTTOM FLANGE)

NOTES:
1. FOR GENERAL NOTES & WELD DETAILS "WB" & "FA" SEE SHEET GN101.
2. ALL MATERIAL A709-50WT2 (UN)
3. T2 - DENOTES MATERIAL SUBJECT TO CHARPY V-NOTCH TEST
- CVN = 15 FT-LBS @ 40°F "H" FREQ FOR THICKNESS UP 2".
- CVN = 20 FT-LBS @ 40°F "H" FREQ FOR THICKNESS OVER 2".

NO.	DATE	REMARKS	BY
△			

REVISIONS

Veritas STEEL
2-EAU CLAIRE, WI 3-WAUSAU, WI 4-PALATKA, FL

STRUCTURE	CUY-010-1978R, OH-10 EASTBOUND OVER GCRTA BLUE AND GREEN LINES
LOCATION	CLEVELAND, OHIO CUYAHOGA COUNTY
PROJECT NO.	17-3000
ENGINEER	MICHAEL BAKER INTERNATIONAL
CONTRACTOR	KOKOSING
ITEM	FLANGE DIAGRAM
SURFACE PREP.	SEE P101 OPEN HOLES 1 1/16"Ø (U.N.O.)
PAINT	SEE P101

APPROVAL	DRAWN AM 05/10/19	SHEET NO.	PLANT	ORDER NO.
SHOP	CHECKED DP 06/05/19	BG123B	3	317023A-20

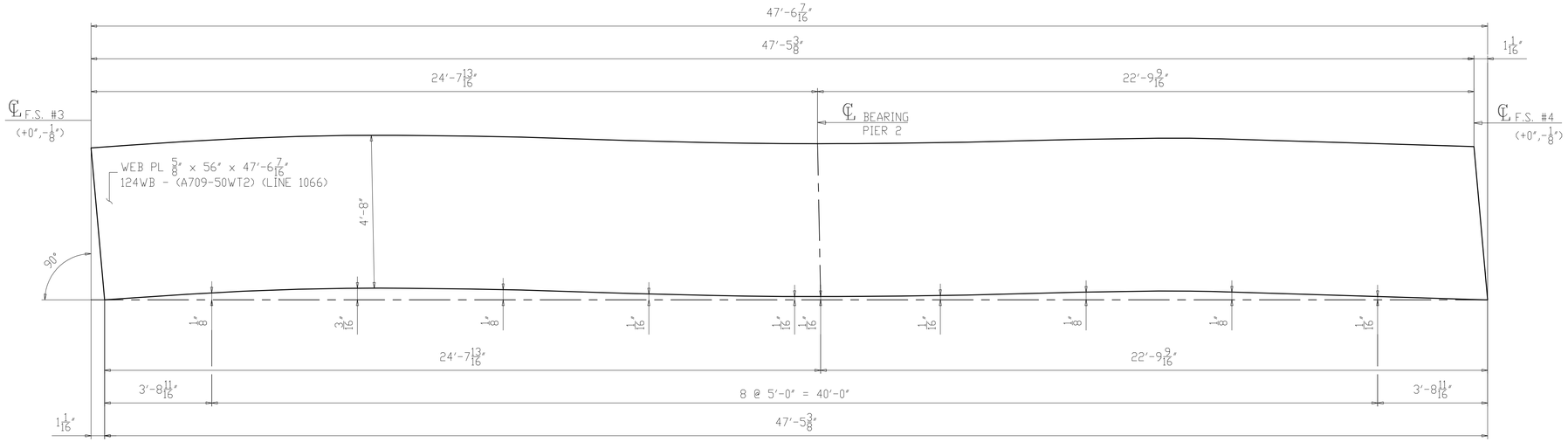

CAMBER DIAGRAM FOR 124F4
(DEVELOPED)

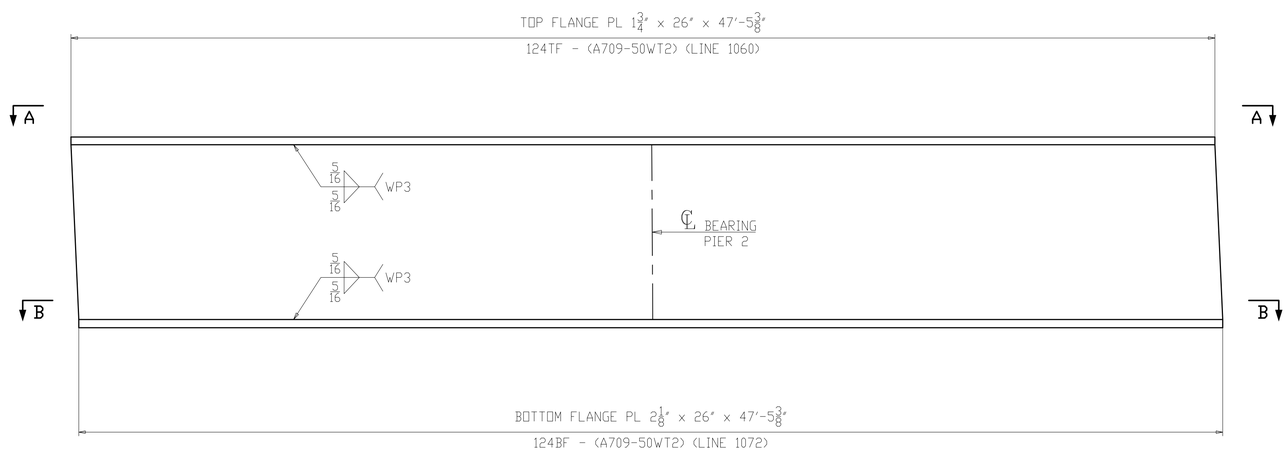

FLANGE DIAGRAM FOR 124F4

NOTES:
1. FOR GENERAL NOTES & WELD DETAILS "WB" & "FA" SEE SHEET GN101.
2. ALL MATERIAL A709-50WT2 (UN)
3. T2 - DENOTES MATERIAL SUBJECT TO CHARPY V-NOTCH TEST
- CVN = 15 FT-LBS @ 40°F "H" FREQ FOR THICKNESS UP 2".
- CVN = 20 FT-LBS @ 40°F "H" FREQ FOR THICKNESS OVER 2".

NO.	DATE	REMARKS	BY

REVISIONS

Veritas STEEL
2-EAU CLAIRE, WI 3-WAUSAU, WI 4-PALATKA, FL
IAS 1605

STRUCTURE	CUY-010-1978R, OH-10 EASTBOUND OVER GCRTA BLUE AND GREEN LINES
LOCATION	CLEVELAND, OHIO CUYAHOGA COUNTY
PROJECT NO.	17-3000
ENGINEER	MICHAEL BAKER INTERNATIONAL
CONTRACTOR	KOKOSING
ITEM	CAMBER & FLANGES DIAGRAM
SURFACE PREP.	SEE P101
OPEN HOLES	1 1/16"Ø (U.N.O.)
PAINT	SEE P101

APPROVAL	DRAWN AM 05/10/19	SHEET NO.	PLANT	ORDER NO.
SHOP	CHECKED DP 06/05/19	BG124AB	3	317023A-20

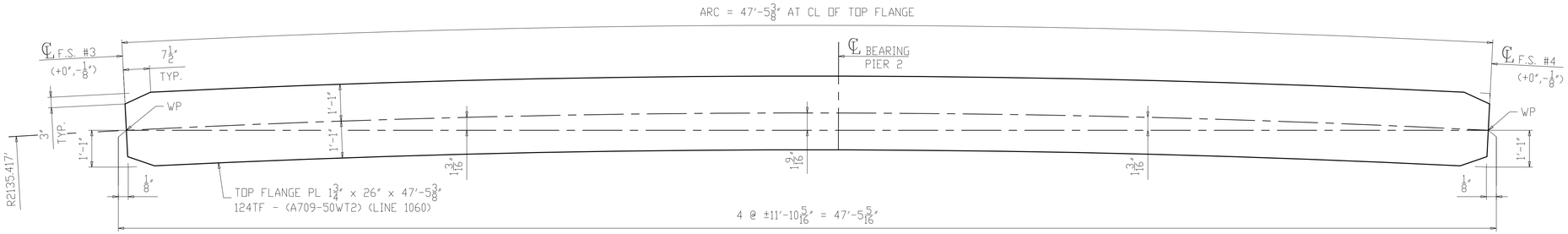

SECTION A-A
(TOP FLANGE)

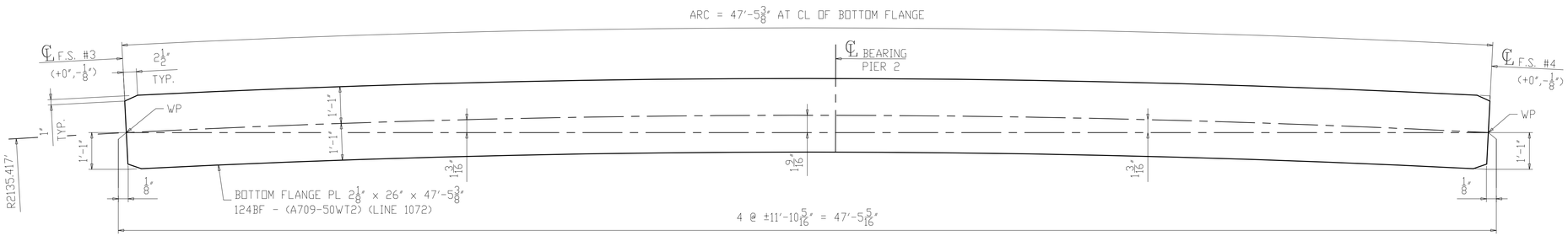

SECTION B-B
(BOTTOM FLANGE)

NOTES:
1. FOR GENERAL NOTES & WELD DETAILS "WB" & "FA" SEE SHEET GN101.
2. ALL MATERIAL A709-50WT2 (UN)
3. T2 - DENOTES MATERIAL SUBJECT TO CHARPY V-NOTCH TEST
- CVN = 15 FT-LBS @ 40°F "H" FREQ FOR THICKNESS UP 2".
- CVN = 20 FT-LBS @ 40°F "H" FREQ FOR THICKNESS OVER 2".

NO.	DATE	REMARKS	BY

REVISIONS

Veritas STEEL
2-EAU CLAIRE, WI 3-WAUSAU, WI 4-PALATKA, FL

STRUCTURE	CUY-010-1978R, OH-10 EASTBOUND OVER GCRTA BLUE AND GREEN LINES
LOCATION	CLEVELAND, OHIO CUYAHOGA COUNTY
PROJECT NO.	17-3000
ENGINEER	MICHAEL BAKER INTERNATIONAL
CONTRACTOR	KOKOSING
ITEM	FLANGE DIAGRAM
SURFACE PREP.	SEE P101 OPEN HOLES 1 1/16"Ø (U.N.O.)
PAINT	SEE P101

APPROVAL	DRAWN AM 05/10/19	SHEET NO.	PLANT	ORDER NO.
SHOP	CHECKED DP 06/05/19	BG124B	3	317023A-20

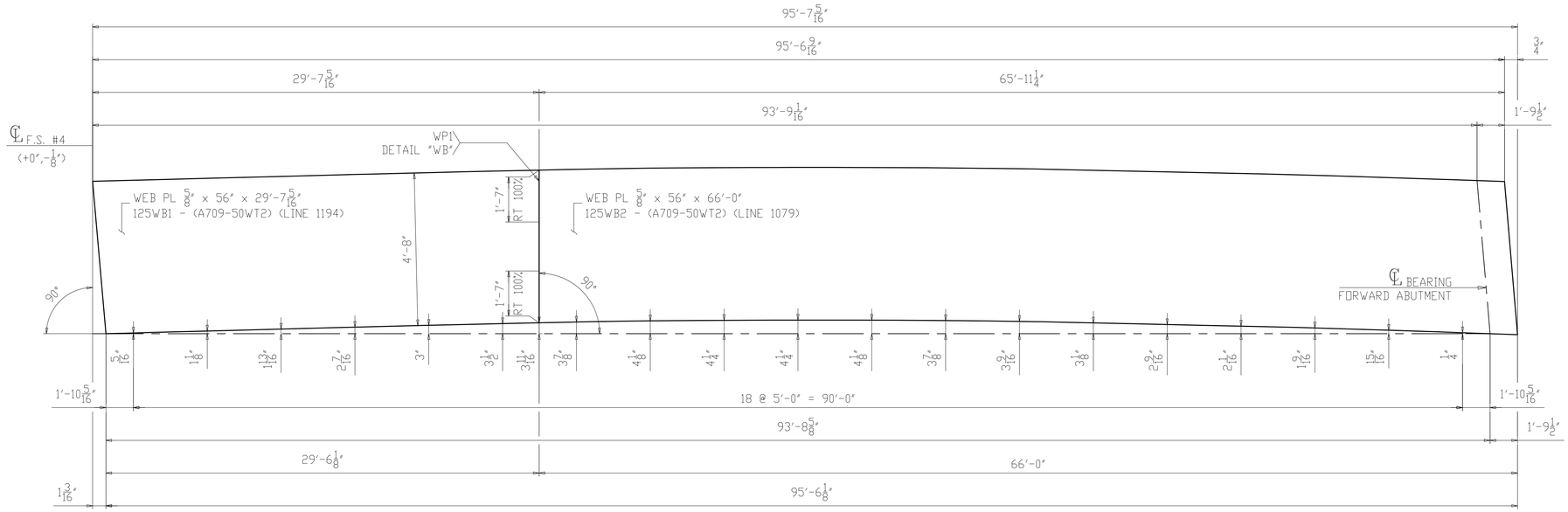

CAMBER DIAGRAM FOR 125A5
(DEVELOPED)

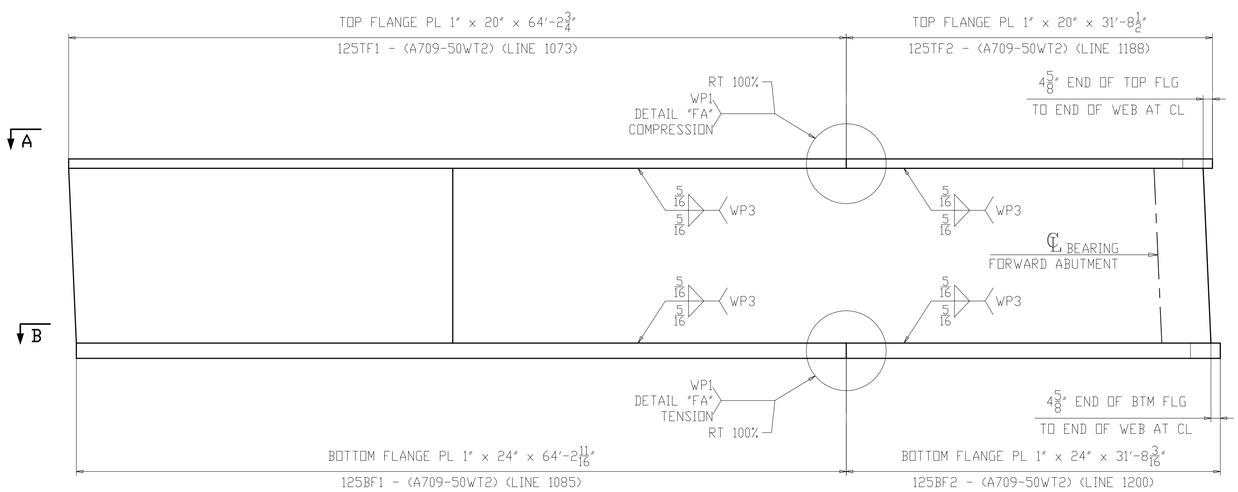

FLANGE DIAGRAM FOR 125A5

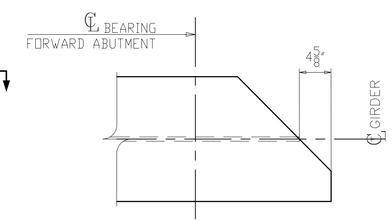

SECTION C
(SHOWN AT TOP)
(SIMILAR AT BOTTOM)

NOTES:
1. FOR GENERAL NOTES & WELD DETAILS "WB" & "FA" SEE SHEET GN101.
2. ALL MATERIAL A709-50WT2 (UN)
3. T2 - DENOTES MATERIAL SUBJECT TO CHARPY V-NOTCH TEST
- CVN = 15 FT-LBS @ 40°F "H" FREQ FOR THICKNESS UP 2".
- CVN = 20 FT-LBS @ 40°F "H" FREQ FOR THICKNESS OVER 2".

NO.	DATE	REMARKS	BY
△			

REVISIONS

Veritas STEEL
2-EAU CLAIRE, WI 3-WAUSAU, WI 4-PALATKA, FL
IAEWA 1605

STRUCTURE	CUY-010-1978R, OH-10 EASTBOUND OVER GCRTA BLUE AND GREEN LINES
LOCATION	CLEVELAND, OHIO CUYAHOGA COUNTY
PROJECT NO.	17-3000
ENGINEER	MICHAEL BAKER INTERNATIONAL
CONTRACTOR	KOKOSING
ITEM	CAMBER & FLANGES DIAGRAM
SURFACE PREP.	SEE P101 OPEN HOLES 1 1/16"Ø (U.N.O.)
PAINT	SEE P101

APPROVAL	DRAWN AM 05/10/19	SHEET NO.	PLANT	ORDER NO.
SHOP	CHECKED DP 06/05/19	BG125AB	3	317023A-20

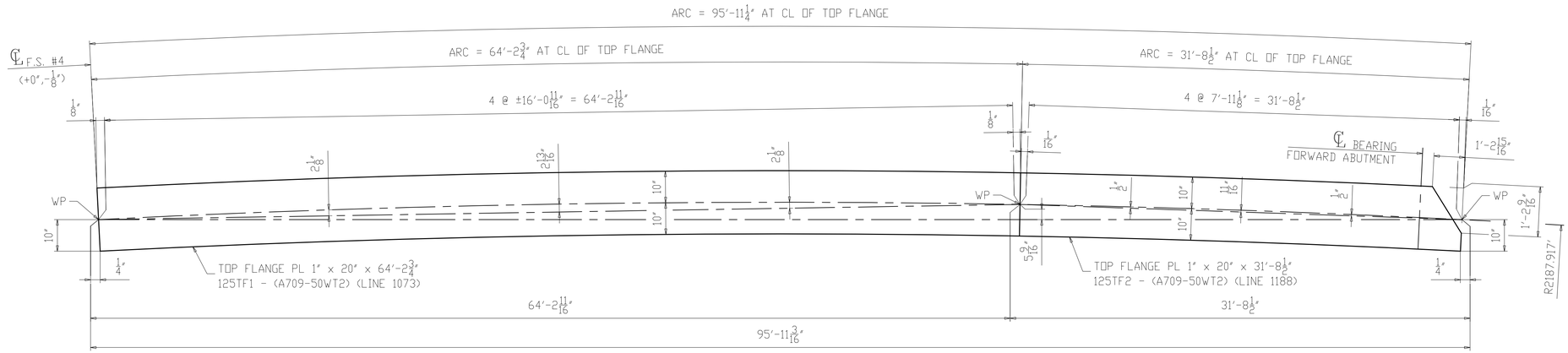

SECTION A-A
(TOP FLANGE)

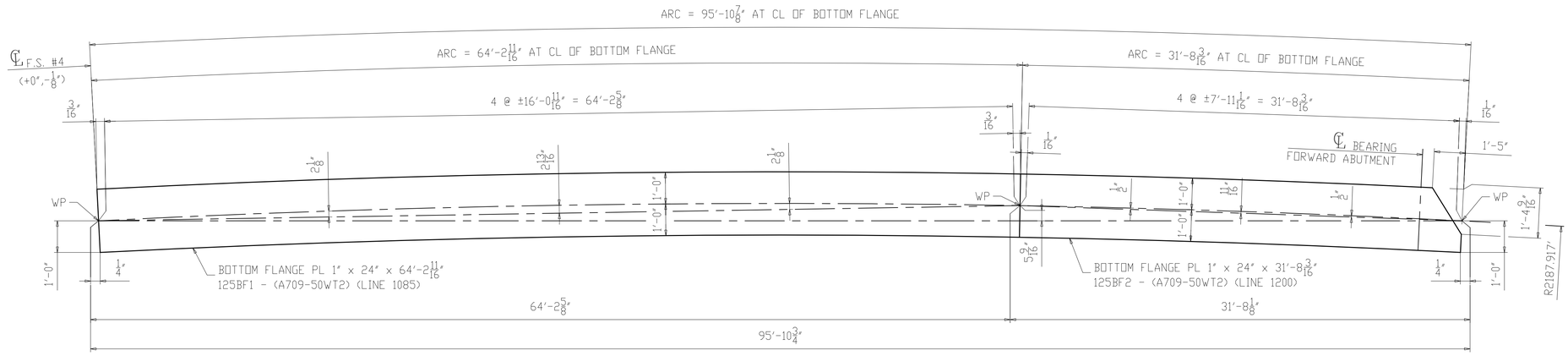

SECTION B-B
(BOTTOM FLANGE)

NOTES:
1. FOR GENERAL NOTES & WELD DETAILS "WB" & "FA" SEE SHEET GN101.
2. ALL MATERIAL A709-50WT2 (UN)
3. T2 - DENOTES MATERIAL SUBJECT TO CHARPY V-NOTCH TEST
- CVN = 15 FT-LBS @ 40°F "H" FREQ FOR THICKNESS UP 2".
- CVN = 20 FT-LBS @ 40°F "H" FREQ FOR THICKNESS OVER 2".

NO.	DATE	REMARKS	BY

REVISIONS

Veritas STEEL
2-EAU CLAIRE, WI 3-WAUSAU, WI 4-PALATKA, FL
IENCA 1605

STRUCTURE	CUY-010-1978R, OH-10 EASTBOUND OVER GCRTA BLUE AND GREEN LINES
LOCATION	CLEVELAND, OHIO CUYAHOGA COUNTY
PROJECT NO.	17-3000
ENGINEER	MICHAEL BAKER INTERNATIONAL
CONTRACTOR	KOKOSING
ITEM	FLANGE DIAGRAM
SURFACE PREP.	SEE P101 OPEN HOLES 1 1/16"Ø (U.N.O.)
PAINT	SEE P101

APPROVAL	DRAWN AM 05/10/19	SHEET NO.	PLANT	ORDER NO.
SHOP	CHECKED DP 06/05/19	BG125B	3	317023A-20

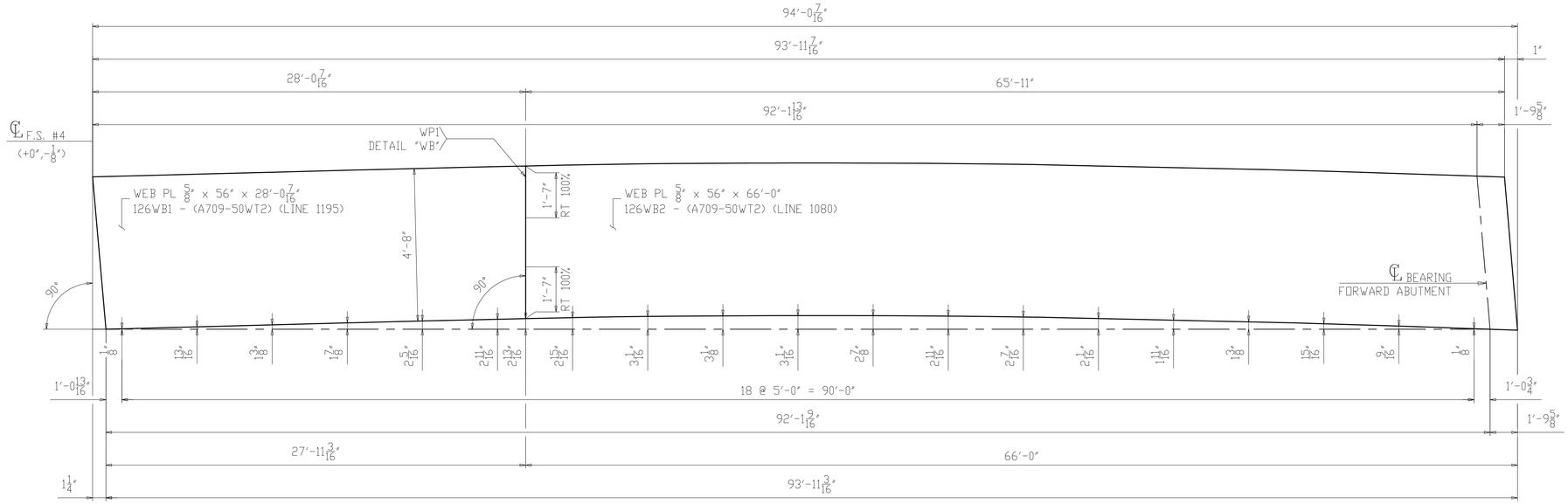

CAMBER DIAGRAM FOR 126B5
(DEVELOPED)

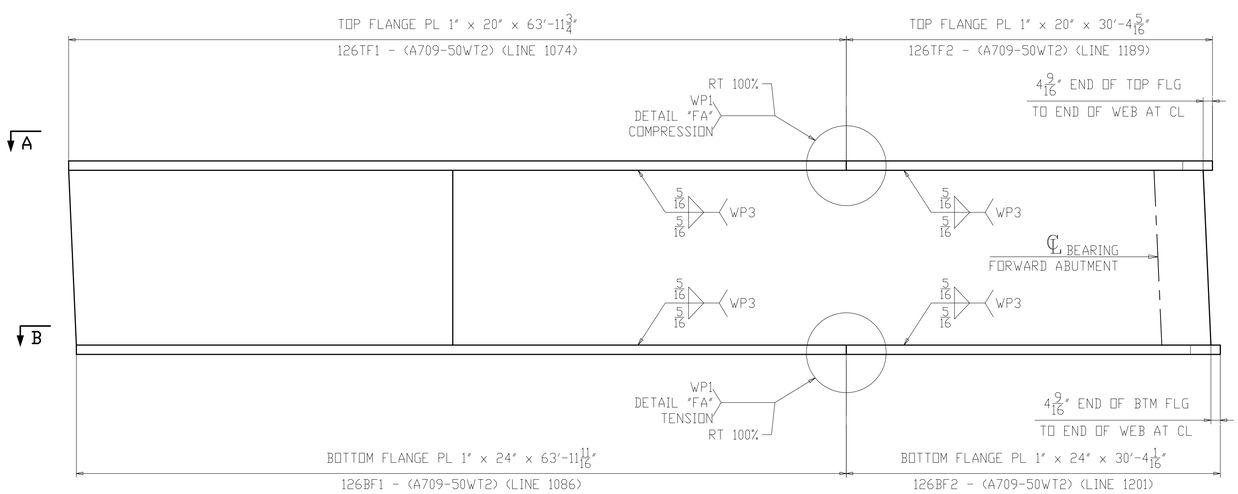

FLANGE DIAGRAM FOR 126B5

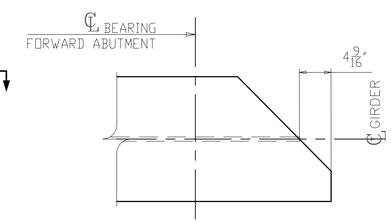

SECTION C
(SHOWN AT TOP)
(SIMILAR AT BOTTOM)

NOTES:
1. FOR GENERAL NOTES & WELD DETAILS "WB" & "FA" SEE SHEET GN101.
2. ALL MATERIAL A709-50WT2 (UN)
3. T2 - DENOTES MATERIAL SUBJECT TO CHARPY V-NOTCH TEST
- CVN = 15 FT-LBS @ 40°F "H" FREQ FOR THICKNESS UP 2".
- CVN = 20 FT-LBS @ 40°F "H" FREQ FOR THICKNESS OVER 2".

NO.	DATE	REMARKS	BY
△			

REVISIONS

Veritas STEEL
2-EAU CLAIRE, WI 3-WAUSAU, WI 4-PALATKA, FL
TENCA 1605

STRUCTURE	CUY-010-1978R, OH-10 EASTBOUND OVER GCRTA BLUE AND GREEN LINES
LOCATION	CLEVELAND, OHIO CUYAHOGA COUNTY
PROJECT NO.	17-3000
ENGINEER	MICHAEL BAKER INTERNATIONAL
CONTRACTOR	KOKOSING
ITEM	CAMBER & FLANGES DIAGRAM
SURFACE PREP.	SEE P101
OPEN HOLES	1 1/16"Ø (U.N.O.)
PAINT	SEE P101

APPROVAL	DRAWN AM 05/10/19	SHEET NO.	PLANT	ORDER NO.
SHOP	CHECKED DP 06/05/19	BG126AB	3	317023A-20

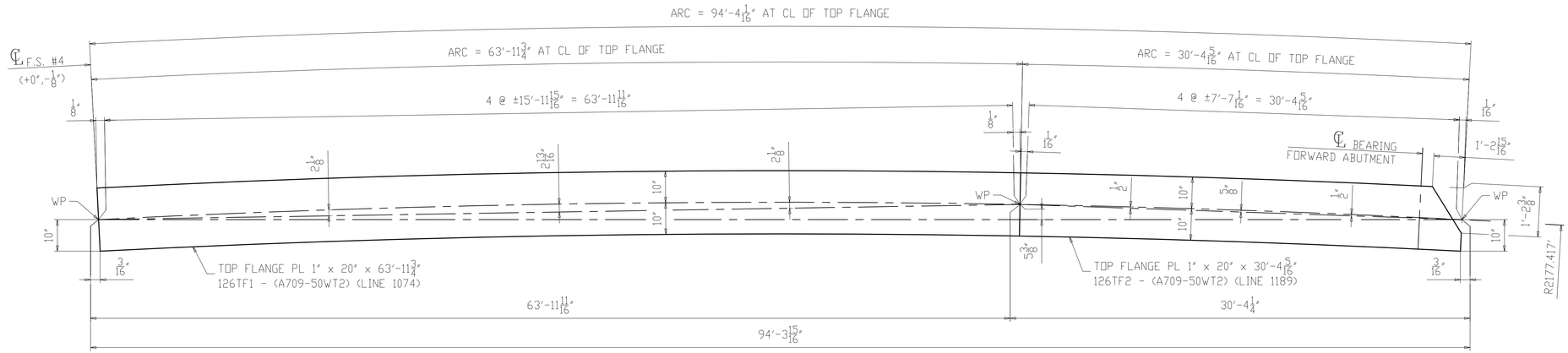

SECTION A-A
(TOP FLANGE)

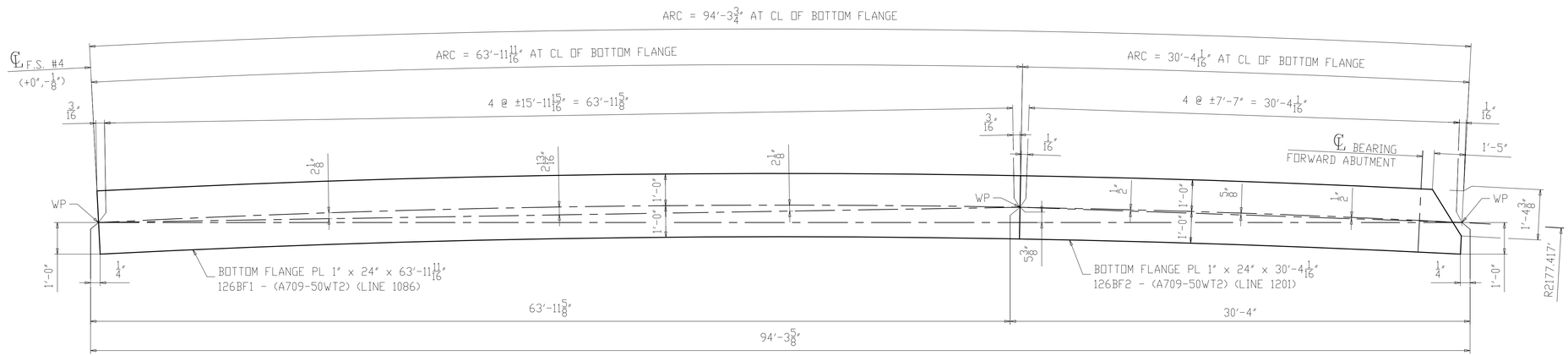

SECTION B-B
(BOTTOM FLANGE)

NOTES:
1. FOR GENERAL NOTES & WELD DETAILS "WB" & "FA" SEE SHEET GN101.
2. ALL MATERIAL A709-50WT2 (UN)
3. T2 - DENOTES MATERIAL SUBJECT TO CHARPY V-NOTCH TEST
- CVN = 15 FT-LBS @ 40°F "H" FREQ FOR THICKNESS UP 2".
- CVN = 20 FT-LBS @ 40°F "H" FREQ FOR THICKNESS OVER 2".

NO.	DATE	REMARKS	BY

REVISIONS

Veritas STEEL
2-EAU CLAIRE, WI 3-WAUSAU, WI 4-PALATKA, FL
IAS 1605

STRUCTURE	CUY-010-1978R, OH-10 EASTBOUND OVER GCRTA BLUE AND GREEN LINES
LOCATION	CLEVELAND, OHIO CUYAHOGA COUNTY
PROJECT NO.	17-3000
ENGINEER	MICHAEL BAKER INTERNATIONAL
CONTRACTOR	KOKOSING
ITEM	FLANGE DIAGRAM
SURFACE PREP.	SEE P101 OPEN HOLES 1 1/16"Ø (U.N.O.)
PAINT	SEE P101

APPROVAL	DRAWN AM 05/10/19	SHEET NO.	PLANT	ORDER NO.
SHOP	CHECKED DP 06/05/19	BG126B	3	317023A-20

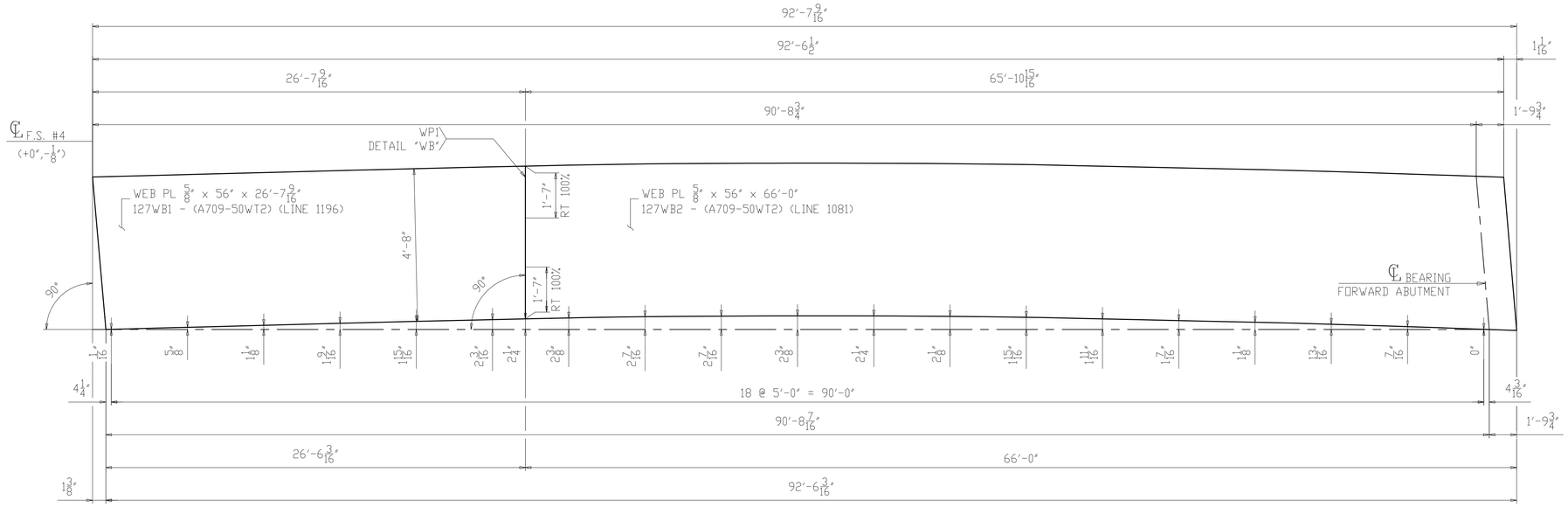

CAMBER DIAGRAM FOR 127C5
(DEVELOPED)

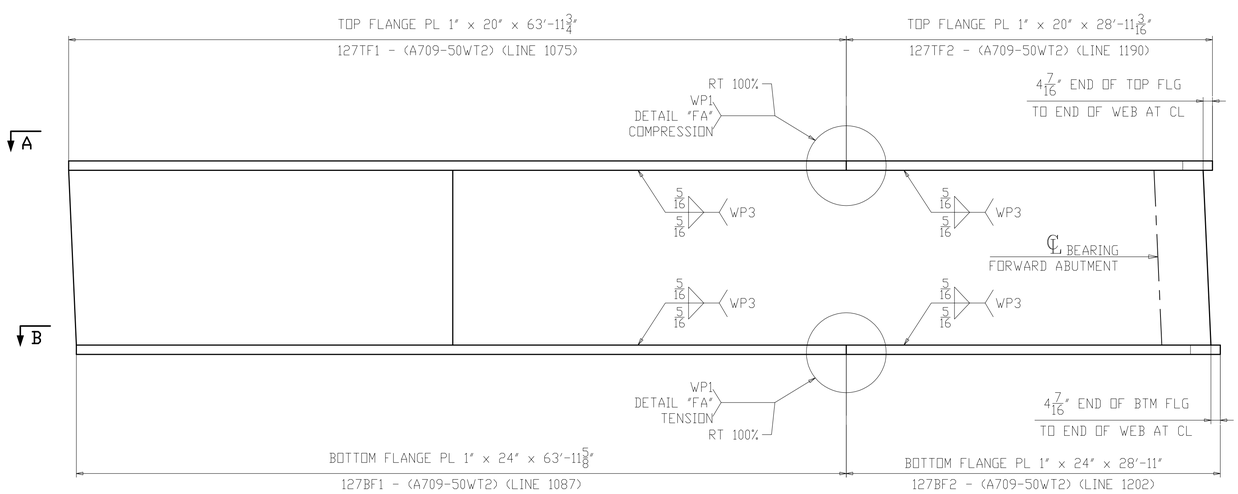

FLANGE DIAGRAM FOR 127C5

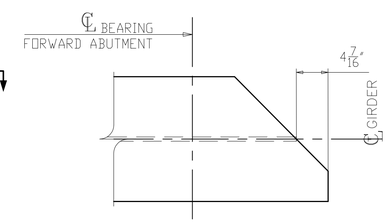

SECTION C
(SHOWN AT TOP)
(SIMILAR AT BOTTOM)

NOTES:
1. FOR GENERAL NOTES & WELD DETAILS "WB" & "FA" SEE SHEET GN101.
2. ALL MATERIAL A709-50WT2 (UN)
3. T2 - DENOTES MATERIAL SUBJECT TO CHARPY V-NOTCH TEST
- CVN = 15 FT-LBS @ 40°F "H" FREQ FOR THICKNESS UP 2".
- CVN = 20 FT-LBS @ 40°F "H" FREQ FOR THICKNESS OVER 2".

NO.	DATE	REMARKS	BY
△			

REVISIONS

Veritas STEEL
2-EAU CLAIRE, WI 3-WAUSAU, WI 4-PALATKA, FL
IAENGA 1605

STRUCTURE	CUY-010-1978R, OH-10 EASTBOUND OVER GCRTA BLUE AND GREEN LINES
LOCATION	CLEVELAND, OHIO CUYAHOGA COUNTY
PROJECT NO.	17-3000
ENGINEER	MICHAEL BAKER INTERNATIONAL
CONTRACTOR	KOKOSING
ITEM	CAMBER & FLANGES DIAGRAM
SURFACE PREP.	SEE P101
OPEN HOLES	1 1/16"Ø (U.N.O.)
PAINT	SEE P101

APPROVAL	DRAWN AM 05/10/19	SHEET NO.	PLANT	ORDER NO.
SHOP	CHECKED DP 06/05/19	BG127AB	3	317023A-20

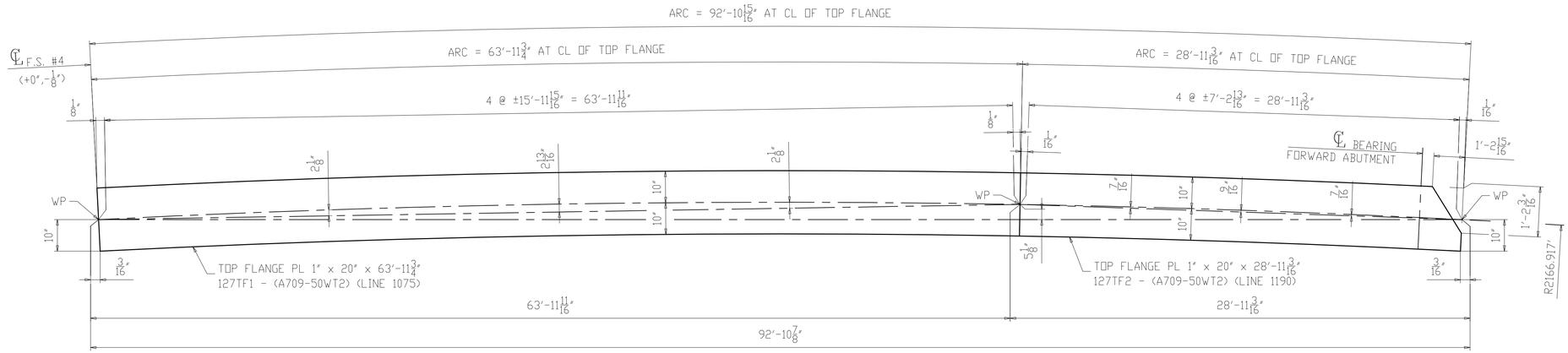

SECTION A-A
(TOP FLANGE)

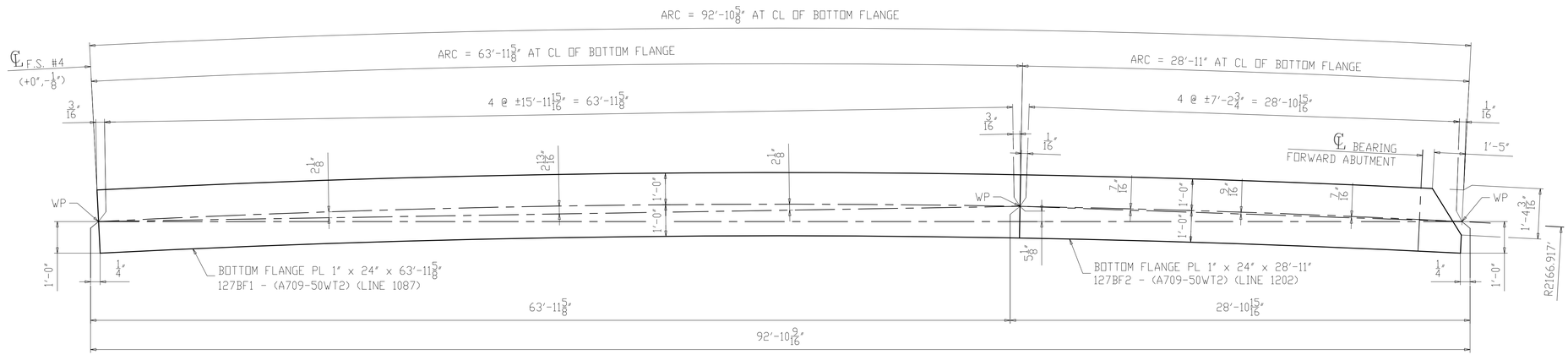

SECTION B-B
(BOTTOM FLANGE)

NOTES:
1. FOR GENERAL NOTES & WELD DETAILS "WB" & "FA" SEE SHEET GN101.
2. ALL MATERIAL A709-50WT2 (UN)
3. T2 - DENOTES MATERIAL SUBJECT TO CHARPY V-NOTCH TEST
- CVN = 15 FT-LBS @ 40°F "H" FREQ FOR THICKNESS UP 2".
- CVN = 20 FT-LBS @ 40°F "H" FREQ FOR THICKNESS OVER 2".

NO.	DATE	REMARKS	BY

REVISIONS

Veritas STEEL
2-EAU CLAIRE, WI 3-WAUSAU, WI 4-PALATKA, FL
TENCA 1605

STRUCTURE	CUY-010-1978R, OH-10 EASTBOUND OVER GCRTA BLUE AND GREEN LINES
LOCATION	CLEVELAND, OHIO CUYAHOGA COUNTY
PROJECT NO.	17-3000
ENGINEER	MICHAEL BAKER INTERNATIONAL
CONTRACTOR	KOKOSING
ITEM	FLANGE DIAGRAM
SURFACE PREP.	SEE P101 OPEN HOLES 1 1/16"Ø (U.N.O.)
PAINT	SEE P101

APPROVAL	DRAWN AM 05/10/19	SHEET NO.	PLANT	ORDER NO.
SHOP	CHECKED DP 06/05/19	BG127B	3	317023A-20

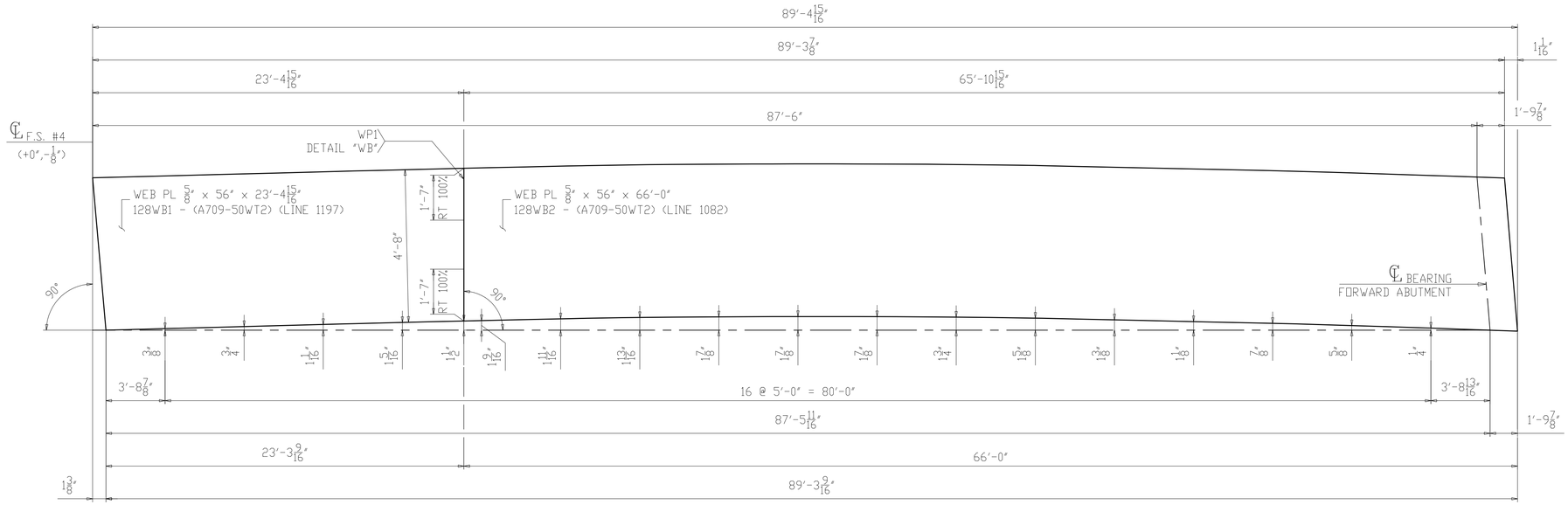

CAMBER DIAGRAM FOR 128D5
(DEVELOPED)

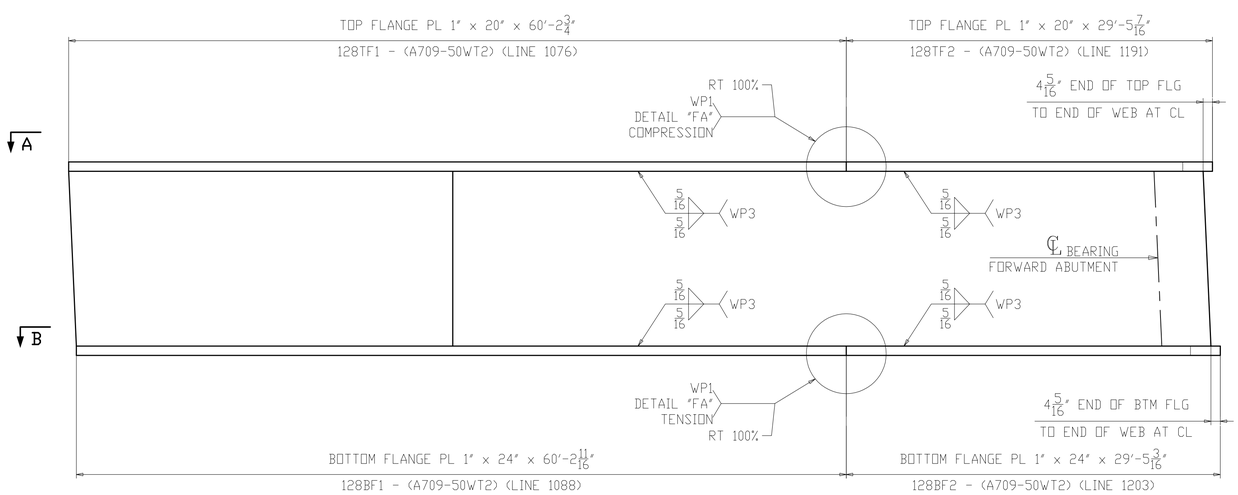

FLANGE DIAGRAM FOR 128D5

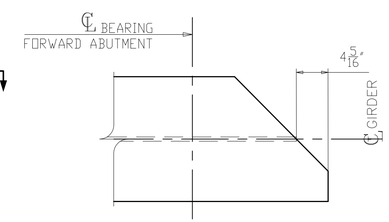

SECTION C
(SHOWN AT TOP)
(SIMILAR AT BOTTOM)

NOTES:
1. FOR GENERAL NOTES & WELD DETAILS "WB" & "FA" SEE SHEET GN101.
2. ALL MATERIAL A709-50WT2 (UN)
3. T2 - DENOTES MATERIAL SUBJECT TO CHARPY V-NOTCH TEST
- CVN = 15 FT-LBS @ 40°F "H" FREQ FOR THICKNESS UP 2".
- CVN = 20 FT-LBS @ 40°F "H" FREQ FOR THICKNESS OVER 2".

NO.	DATE	REMARKS	BY
△			

REVISIONS

Veritas STEEL
2-EAU CLAIRE, WI 3-WAUSAU, WI 4-PALATKA, FL
IAENGA 1605

STRUCTURE	CUY-010-1978R, OH-10 EASTBOUND OVER GCRTA BLUE AND GREEN LINES
LOCATION	CLEVELAND, OHIO CUYAHOGA COUNTY
PROJECT NO.	17-3000
ENGINEER	MICHAEL BAKER INTERNATIONAL
CONTRACTOR	KOKOSING
ITEM	CAMBER & FLANGES DIAGRAM
SURFACE PREP.	SEE P101 OPEN HOLES 1 1/16"Ø (U.N.O.)
PAINT	SEE P101

APPROVAL	DRAWN AM 05/10/19	SHEET NO.	PLANT	ORDER NO.
SHOP	CHECKED DP 06/05/19	BG128AB	3	317023A-20

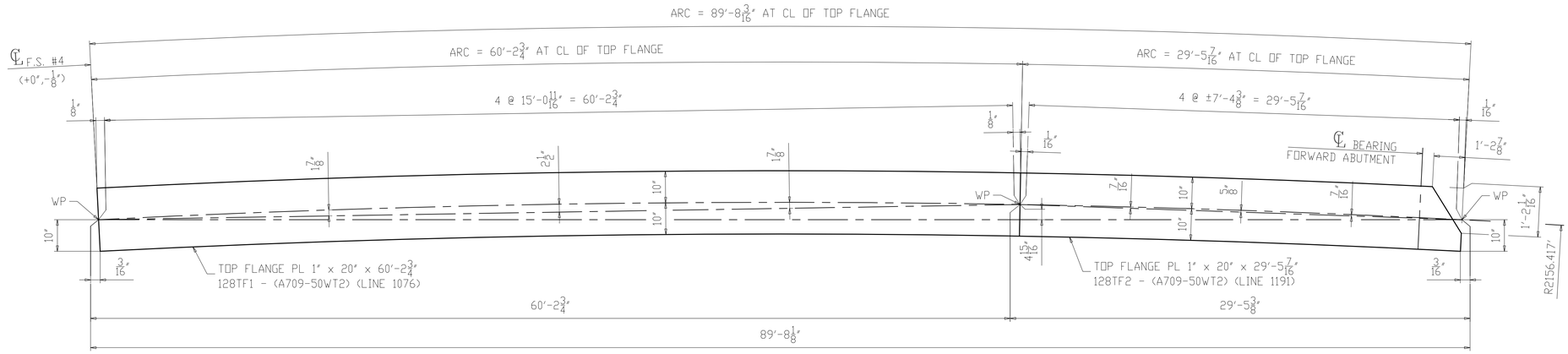

SECTION A-A
(TOP FLANGE)

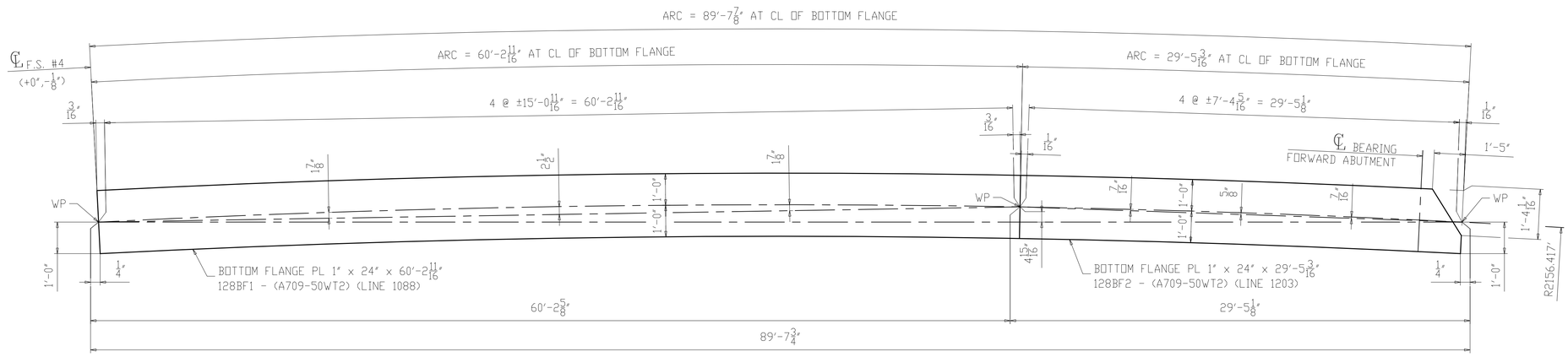

SECTION B-B
(BOTTOM FLANGE)

NOTES:
1. FOR GENERAL NOTES & WELD DETAILS "WB" & "FA" SEE SHEET GN101.
2. ALL MATERIAL A709-50WT2 (UN)
3. T2 - DENOTES MATERIAL SUBJECT TO CHARPY V-NOTCH TEST
- CVN = 15 FT-LBS @ 40°F "H" FREQ FOR THICKNESS UP 2".
- CVN = 20 FT-LBS @ 40°F "H" FREQ FOR THICKNESS OVER 2".

NO.	DATE	REMARKS	BY
△			

REVISIONS

Veritas STEEL
2-EAU CLAIRE, WI 3-WAUSAU, WI 4-PALATKA, FL
TENCA 1605

STRUCTURE	CUY-010-1978R, OH-10 EASTBOUND OVER GCRTA BLUE AND GREEN LINES
LOCATION	CLEVELAND, OHIO CUYAHOGA COUNTY
PROJECT NO.	17-3000
ENGINEER	MICHAEL BAKER INTERNATIONAL
CONTRACTOR	KOKOSING
ITEM	FLANGE DIAGRAM
SURFACE PREP.	SEE P101 OPEN HOLES 1 1/16"Ø (U.N.O.)
PAINT	SEE P101

APPROVAL	DRAWN AM 05/10/19	SHEET NO.	PLANT	ORDER NO.
SHOP	CHECKED DP 06/05/19	BG128B	3	317023A-20

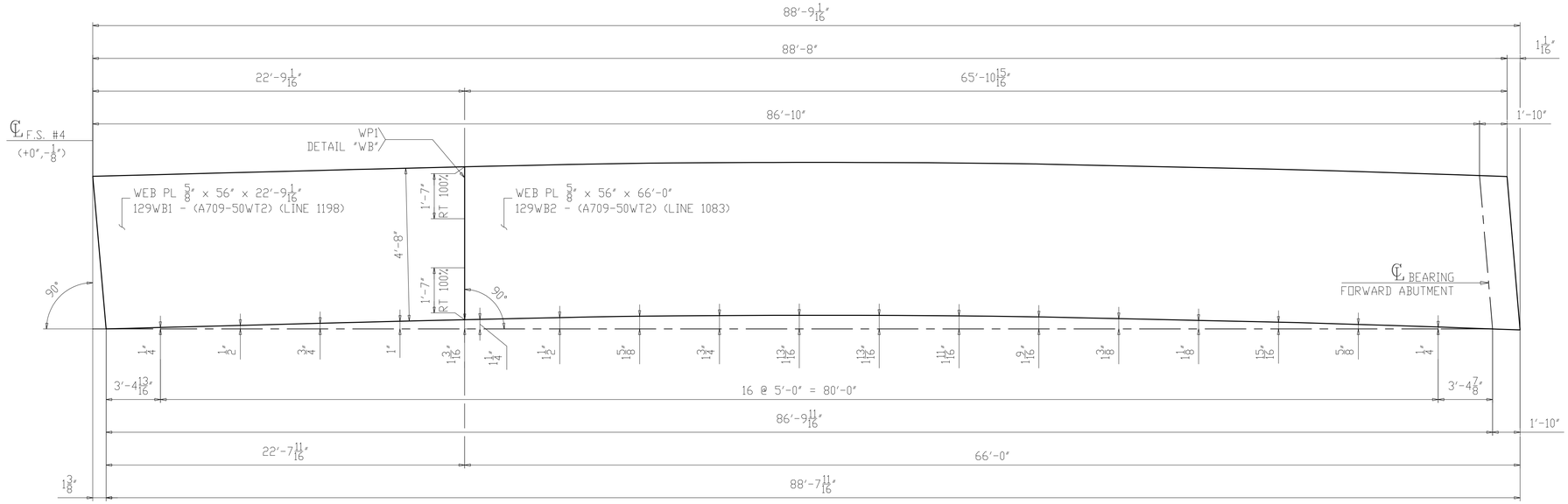

CAMBER DIAGRAM FOR 129E5
(DEVELOPED)

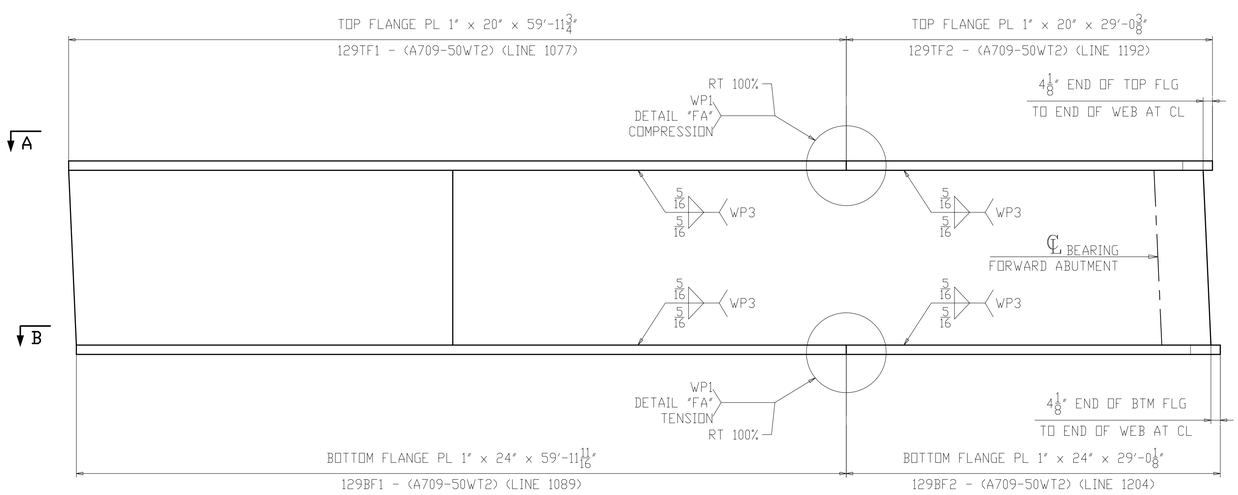

FLANGE DIAGRAM FOR 129E5

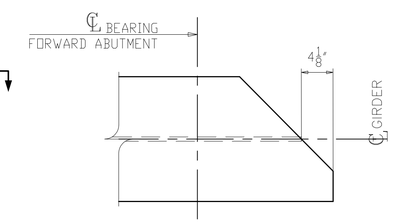

SECTION C
(SHOWN AT TOP)
(SIMILAR AT BOTTOM)

NOTES:
1. FOR GENERAL NOTES & WELD DETAILS "WB" & "FA" SEE SHEET GN101.
2. ALL MATERIAL A709-50WT2 (UN)
3. T2 - DENOTES MATERIAL SUBJECT TO CHARPY V-NOTCH TEST
- CVN = 15 FT-LBS @ 40°F "H" FREQ FOR THICKNESS UP 2".
- CVN = 20 FT-LBS @ 40°F "H" FREQ FOR THICKNESS OVER 2".

NO.	DATE	REMARKS	BY
△			

REVISIONS

Veritas STEEL
2-EAU CLAIRE, WI 3-WAUSAU, WI 4-PALATKA, FL
TENCA 1605

STRUCTURE	CUY-010-1978R, OH-10 EASTBOUND OVER GCRTA BLUE AND GREEN LINES
LOCATION	CLEVELAND, OHIO CUYAHOGA COUNTY
PROJECT NO.	17-3000
ENGINEER	MICHAEL BAKER INTERNATIONAL
CONTRACTOR	KOKOSING
ITEM	CAMBER & FLANGES DIAGRAM
SURFACE PREP.	SEE P101 OPEN HOLES 1 1/16"Ø (U.N.O.)
PAINT	SEE P101

APPROVAL	DRAWN AM 05/10/19	SHEET NO.	PLANT	ORDER NO.
SHOP	CHECKED DP 06/05/19	BG129AB	3	317023A-20

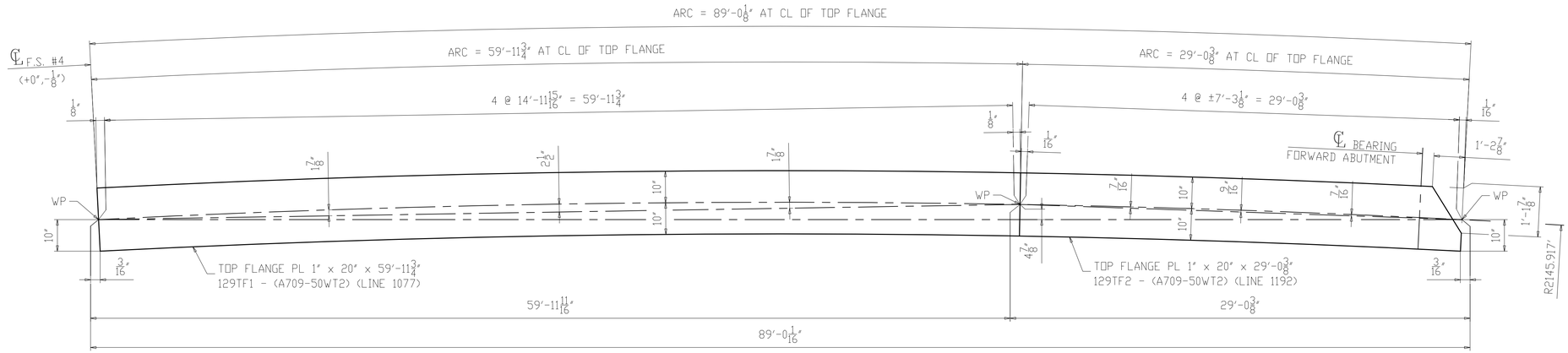

SECTION A-A
(TOP FLANGE)

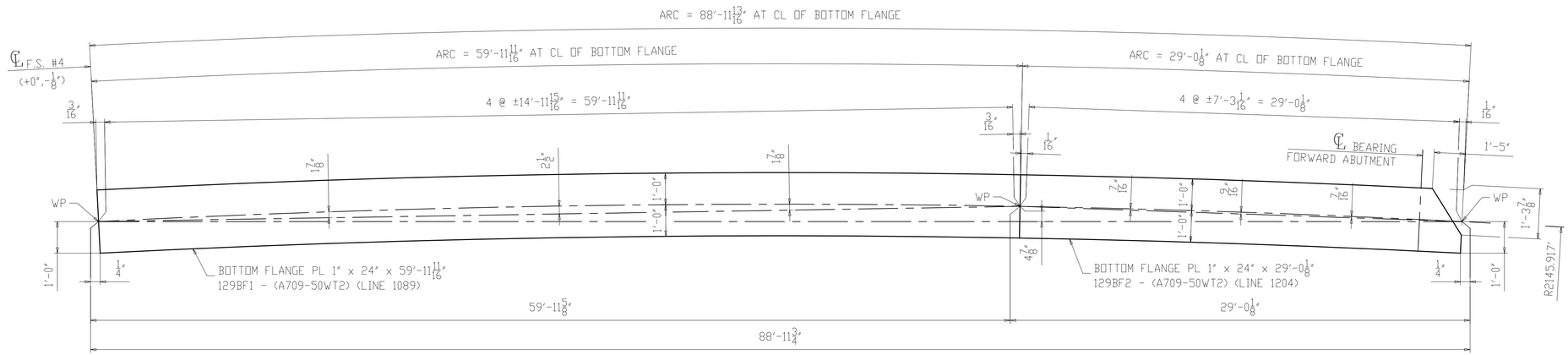

SECTION B-B
(BOTTOM FLANGE)

NOTES:
1. FOR GENERAL NOTES & WELD DETAILS "WB" & "FA" SEE SHEET GN101.
2. ALL MATERIAL A709-50WT2 (UN)
3. T2 - DENOTES MATERIAL SUBJECT TO CHARPY V-NOTCH TEST
- CVN = 15 FT-LBS @ 40°F "H" FREQ FOR THICKNESS UP 2".
- CVN = 20 FT-LBS @ 40°F "H" FREQ FOR THICKNESS OVER 2".

NO.	DATE	REMARKS	BY

REVISIONS

Veritas STEEL
2-EAU CLAIRE, WI 3-WAUSAU, WI 4-PALATKA, FL
IENCA 1605

STRUCTURE	CUY-010-1978R, OH-10 EASTBOUND OVER GCRTA BLUE AND GREEN LINES
LOCATION	CLEVELAND, OHIO CUYAHOGA COUNTY
PROJECT NO.	17-3000
ENGINEER	MICHAEL BAKER INTERNATIONAL
CONTRACTOR	KOKOSING
ITEM	FLANGE DIAGRAM
SURFACE PREP.	SEE P101 OPEN HOLES 1 1/16"Ø (U.N.O.)
PAINT	SEE P101

APPROVAL	DRAWN AM 05/10/19	SHEET NO.	PLANT	ORDER NO.
SHOP	CHECKED DP 06/05/19	BG129B	3	317023A-20

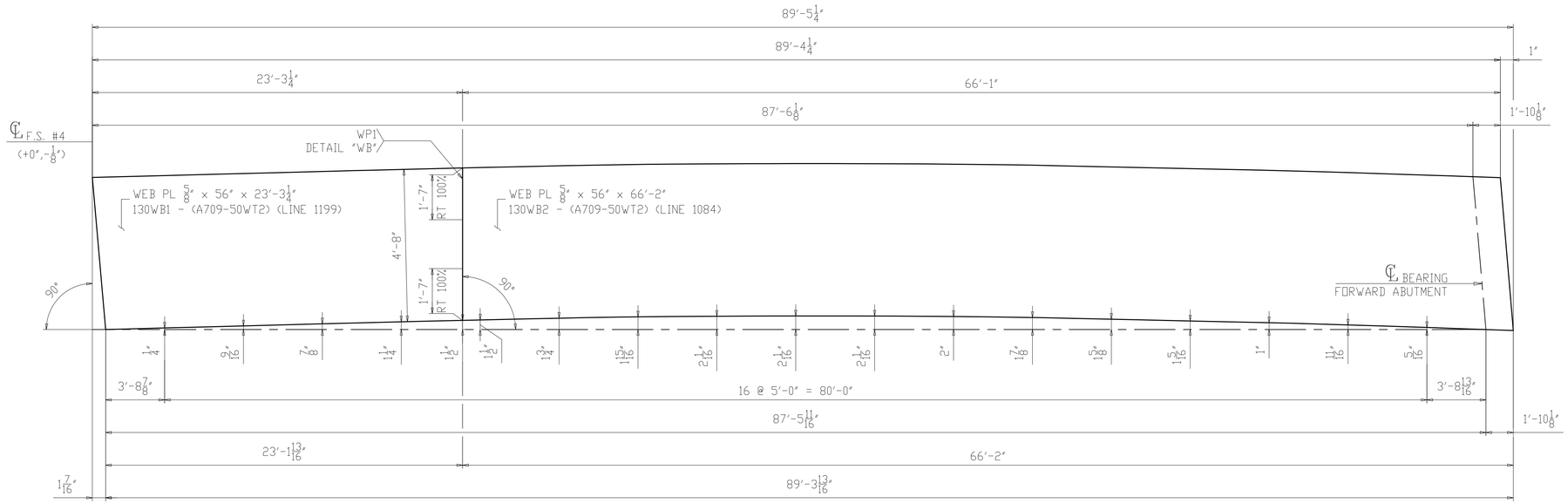

CAMBER DIAGRAM FOR 130F5
(DEVELOPED)

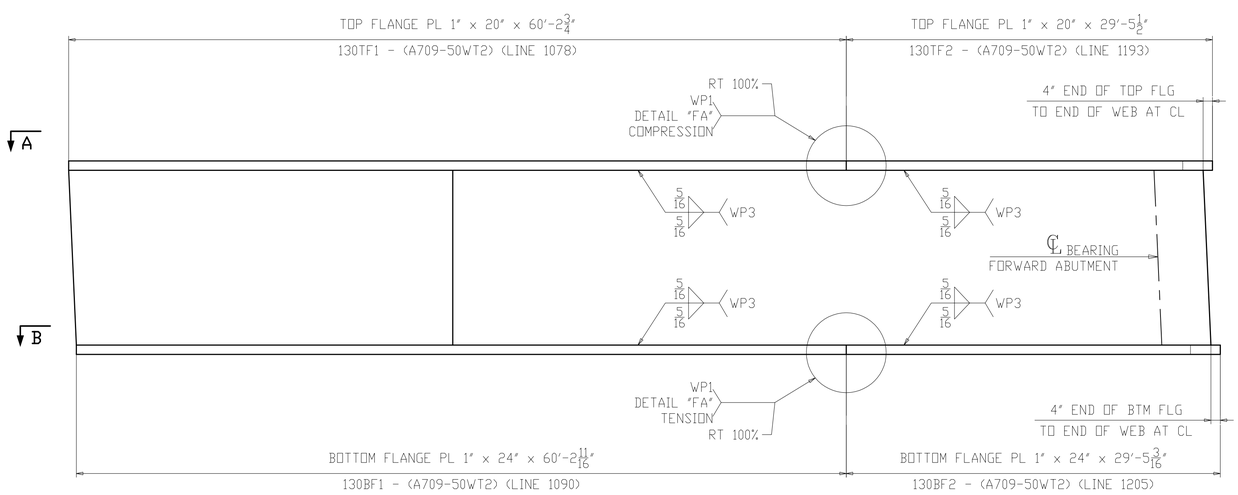

FLANGE DIAGRAM FOR 130F5

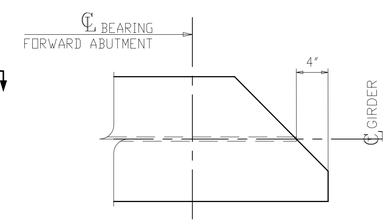

SECTION C
(SHOWN AT TOP)
(SIMILAR AT BOTTOM)

NOTES:
1. FOR GENERAL NOTES & WELD DETAILS "WB" & "FA" SEE SHEET GN101.
2. ALL MATERIAL A709-50WT2 (UN)
3. T2 - DENOTES MATERIAL SUBJECT TO CHARPY V-NOTCH TEST
- CVN = 15 FT-LBS @ 40°F "H" FREQ FOR THICKNESS UP 2".
- CVN = 20 FT-LBS @ 40°F "H" FREQ FOR THICKNESS OVER 2".

NO.	DATE	REMARKS	BY

REVISIONS

Veritas STEEL
2-EAU CLAIRE, WI 3-WAUSAU, WI 4-PALATKA, FL
TENCA 1605

STRUCTURE	CUY-010-1978R, OH-10 EASTBOUND OVER GCRTA BLUE AND GREEN LINES
LOCATION	CLEVELAND, OHIO CUYAHOGA COUNTY
PROJECT NO.	17-3000
ENGINEER	MICHAEL BAKER INTERNATIONAL
CONTRACTOR	KOKOSING
ITEM	CAMBER & FLANGES DIAGRAM
SURFACE PREP.	SEE P101 OPEN HOLES 1 1/16"Ø (U.N.O.)
PAINT	SEE P101

APPROVAL	DRAWN AM 05/10/19	SHEET NO.	PLANT	ORDER NO.
SHOP	CHECKED DP 06/05/19	BG130AB	3	317023A-20

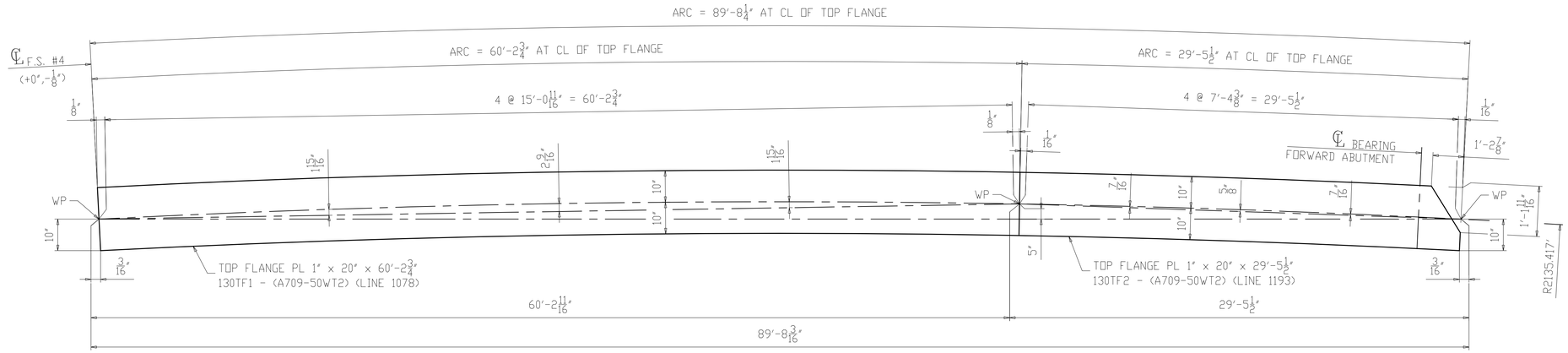

SECTION A-A
(TOP FLANGE)

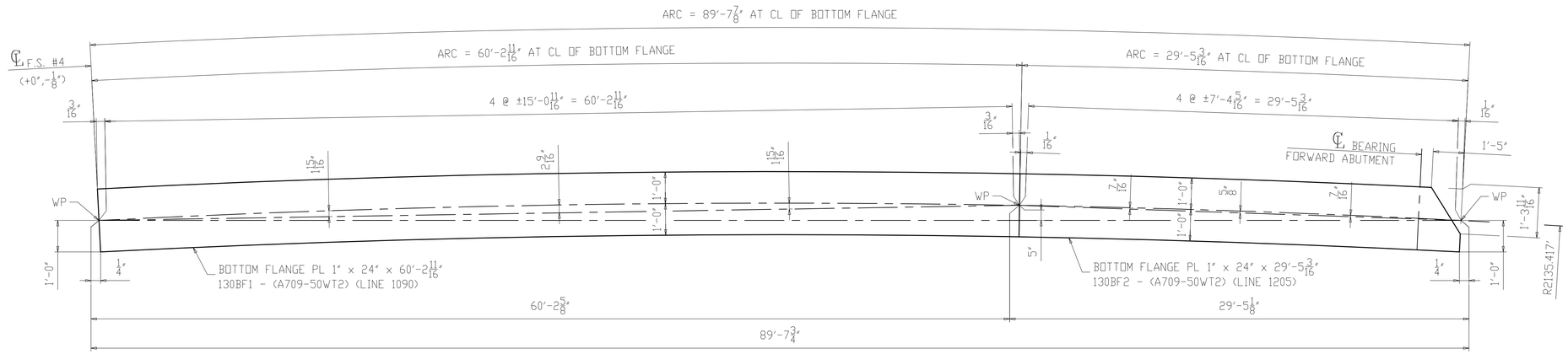

SECTION B-B
(BOTTOM FLANGE)

NOTES:
1. FOR GENERAL NOTES & WELD DETAILS "WB" & "FA" SEE SHEET GN101.
2. ALL MATERIAL A709-50WT2 (UN)
3. T2 - DENOTES MATERIAL SUBJECT TO CHARPY V-NOTCH TEST
- CVN = 15 FT-LBS @ 40°F "H" FREQ FOR THICKNESS UP 2".
- CVN = 20 FT-LBS @ 40°F "H" FREQ FOR THICKNESS OVER 2".

NO.	DATE	REMARKS	BY
△			

REVISIONS

Veritas STEEL
2-EAU CLAIRE, WI 3-WAUSAU, WI 4-PALATKA, FL
TENCA 1605

STRUCTURE	CUY-010-1978R, OH-10 EASTBOUND OVER GCRTA BLUE AND GREEN LINES
LOCATION	CLEVELAND, OHIO CUYAHOGA COUNTY
PROJECT NO.	17-3000
ENGINEER	MICHAEL BAKER INTERNATIONAL
CONTRACTOR	KOKOSING
ITEM	FLANGE DIAGRAM
SURFACE PREP.	SEE P101 OPEN HOLES 1 1/16"Ø (U.N.O.)
PAINT	SEE P101

APPROVAL	DRAWN AM 05/10/19	SHEET NO.	PLANT	ORDER NO.
SHOP	CHECKED DP 06/05/19	BG130B	3	317023A-20

ERECTION PLAN

NOTES:
1. FOR GENERAL NOTES SEE SHEET GN101.
2. ALL MATERIAL A709-50WT2 (UN)
3. (T) - DENOTES TOP
   (B) - DENOTES BOTTOM

SHEET INDEX	
DWG	SHEET NUMBER
ERECTION DRAWINGS	E101 - E106
FIELD BOLT LIST	FB101
PAINT NOTES	P101
GENERAL NOTES	GN101
BASIC GIRDERS	BG101 - BG130
HORIZONTAL CURVING DIAGRAMS	HC101 - HC105
BLOCKING DIAGRAMS	BD101 - BD104
FULL ASSEMBLY DIAGRAM	FA101
PLATE GIRDER ASSEMBLIES	101 - 130
FIELD ASSEMBLIES	131 - 173
"X" SHEETS	X101 - X112

ALL STEEL SHALL BE ERECTED WITH THE "SHIPPING MARK" IN THE SAME RELATIVE POSITION AS SHOWN ON THE ERECTION PLAN

NOTICE TO ERECTOR
BACKCHARGES FOR CORRECTIVE WORK OR REPLACED MATERIAL WILL NOT BE ACCEPTED UNLESS EXPRESSLY AUTHORIZED BY VERITAS STEEL, LLC BEFORE ANY SUCH COSTS ARE INCURRED.

FOR TYPICAL CONNECTION OF INTERMEDIATE K-FRAME BETWEEN GIRDERS A-B, B-C AND E-F SEE SECTION E-E

FOR TYPICAL CONNECTION OF INTERMEDIATE K-FRAME BETWEEN GIRDERS C-D SEE SECTION F-F

FOR TYPICAL CONNECTION OF INTERMEDIATE K-FRAME BETWEEN GIRDERS D-E SEE SECTION G-G

1 FOR TYPICAL CONNECTION OF GAS LINE UTILITY SUPPORT BETWEEN GIRDERS C-D SEE SECTION H-H (U.N.O.)

FOR TYPICAL CONNECTION OF CONDUIT UTILITY SUPPORT BETWEEN GIRDERS D-E SEE SECTION J-J (U.N.O.)

FOR TYPICAL CONNECTION OF LEAN ON BRACING BETWEEN GIRDERS B-C SEE SECTION K-K

FOR TYPICAL CONNECTION OF LEAN ON BRACING BETWEEN GIRDERS D-E SEE SECTION M-M

NO.	DATE	REMARKS	BY
1	11/01/19	AS PER APPROVAL COMMENTS	DP

REVISIONS

Veritas STEEL
2-EAU CLAIRE, WI 3-WAUSAU, WI 4-PALATKA, FL
IAS TENCA 1605

STRUCTURE	CUY-010-1978R, OH-10 EASTBOUND OVER GCRTA BLUE AND GREEN LINES
LOCATION	CLEVELAND, OHIO CUYAHOGA COUNTY
PROJECT NO.	17-3000
ENGINEER	MICHAEL BAKER INTERNATIONAL
CONTRACTOR	KOKOSING
ITEM	ERECTION PLAN
SURFACE PREP.	SEE P101 OPEN HOLES 1 1/16"Ø (U.N.O.)
PAINT	SEE P101

APPROVAL	DRAWN AM 05/09/19	SHEET NO.	PLANT	ORDER NO.
SHOP	CHECKED DP 06/12/19	E101	3	317023A

ERECTION PLAN

NOTES:
1. FOR GENERAL NOTES SEE SHEET GN101.
2. ALL MATERIAL A709-50WT2 (UN)
3. (T) - DENOTES TOP
   (B) - DENOTES BOTTOM

FOR TYPICAL CONNECTION OF INTERMEDIATE K-FRAME BETWEEN GIRDERS A-B, B-C AND E-F SEE SECTION E-E

FOR TYPICAL CONNECTION OF INTERMEDIATE K-FRAME BETWEEN GIRDERS C-D SEE SECTION F-F

FOR TYPICAL CONNECTION OF INTERMEDIATE K-FRAME BETWEEN GIRDERS D-E SEE SECTION G-G

1 FOR TYPICAL CONNECTION OF GAS LINE UTILITY SUPPORT BETWEEN GIRDERS C-D SEE SECTION H-H (U.N.O.)

FOR TYPICAL CONNECTION OF CONDUIT UTILITY SUPPORT BETWEEN GIRDERS D-E SEE SECTION J-J (U.N.O.)

FOR TYPICAL CONNECTION OF LEAN ON BRACING BETWEEN GIRDERS B-C SEE SECTION K-K

FOR TYPICAL CONNECTION OF LEAN ON BRACING BETWEEN GIRDERS D-E SEE SECTION M-M

ALL STEEL SHALL BE ERECTED WITH THE "SHIPPING MARK" IN THE SAME RELATIVE POSITION AS SHOWN ON THE ERECTION PLAN

NO.	DATE	REMARKS	BY
1	11/01/19	AS PER APPROVAL COMMENTS	DP

REVISIONS

Veritas STEEL
2-EAU CLAIRE, WI 3-WAUSAU, WI 4-PALATKA, FL
TENCA 1605

STRUCTURE	CUY-010-1978R, OH-10 EASTBOUND OVER GCRTA BLUE AND GREEN LINES
LOCATION	CLEVELAND, OHIO CUYAHOGA COUNTY
PROJECT NO.	17-3000
ENGINEER	MICHAEL BAKER INTERNATIONAL
CONTRACTOR	KOKOSING
ITEM	ERECTION PLAN
SURFACE PREP.	SEE P101
OPEN HOLES	1 1/16"Ø (U.N.O.)
PAINT	SEE P101

APPROVAL	DRAWN AM 05/09/19	SHEET NO.	PLANT	ORDER NO.
SHOP	CHECKED DP 06/12/19	E102	3	317023A

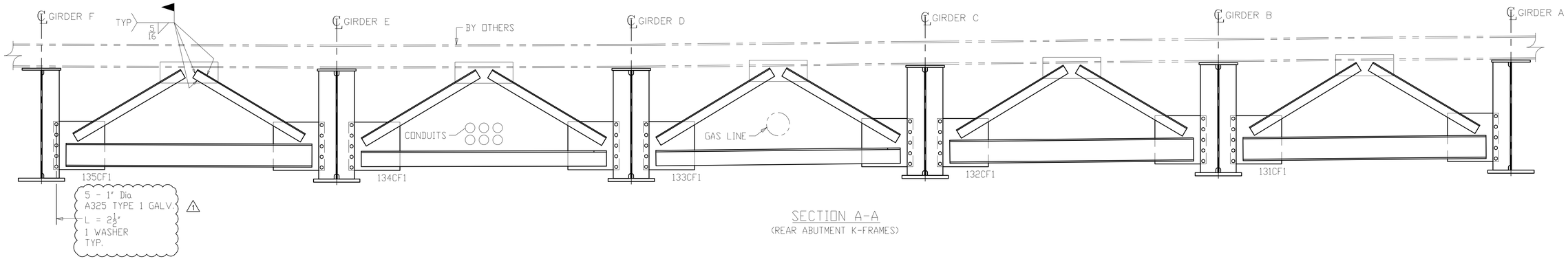

SECTION A-A
(REAR ABUTMENT K-FRAMES)

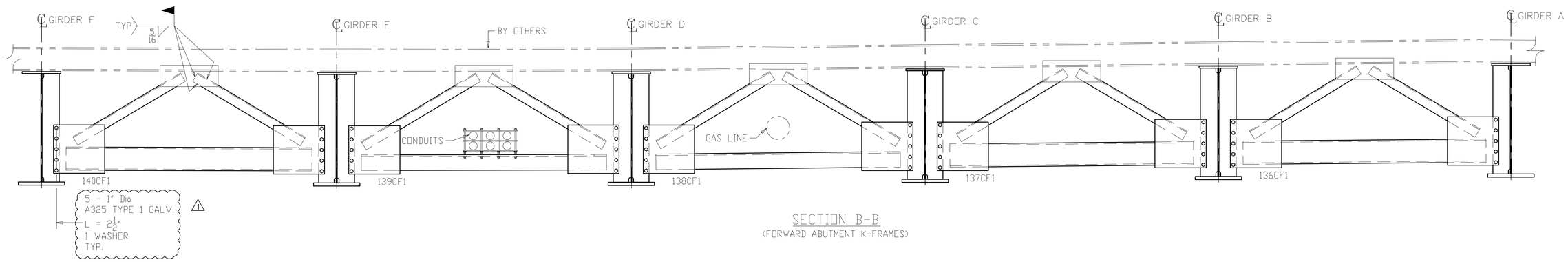

SECTION B-B
(FORWARD ABUTMENT K-FRAMES)

NOTES:
1. FOR GENERAL NOTES SEE SHEET GN101.
2. ALL MATERIAL A709-50WT2 (UN)

NO.	DATE	REMARKS	BY
1	11/01/19	AS PER APPROVAL COMMENTS	DP

REVISIONS

Veritas STEEL
2-EAU CLAIRE, WI 3-WAUSAU, WI 4-PALATKA, FL
IENCA 1605

STRUCTURE	CUY-010-1978R, OH-10 EASTBOUND OVER GCRTA BLUE AND GREEN LINES
LOCATION	CLEVELAND, OHIO CUYAHOGA COUNTY
PROJECT NO.	17-3000
ENGINEER	MICHAEL BAKER INTERNATIONAL
CONTRACTOR	KOKOSING
ITEM	ERECTION PLAN - SECTIONS
SURFACE PREP.	SEE P101 OPEN HOLES 1 1/16"Ø (U.N.O.)
PAINT	SEE P101

APPROVAL	DRAWN AM 05/09/19	SHEET NO.	PLANT	ORDER NO.
SHOP	CHECKED DP 06/12/19	E103	3	317023A

ALL STEEL SHALL BE ERECTED WITH THE "SHIPPING MARK" IN THE SAME RELATIVE POSITION AS SHOWN ON THE ERECTION PLAN

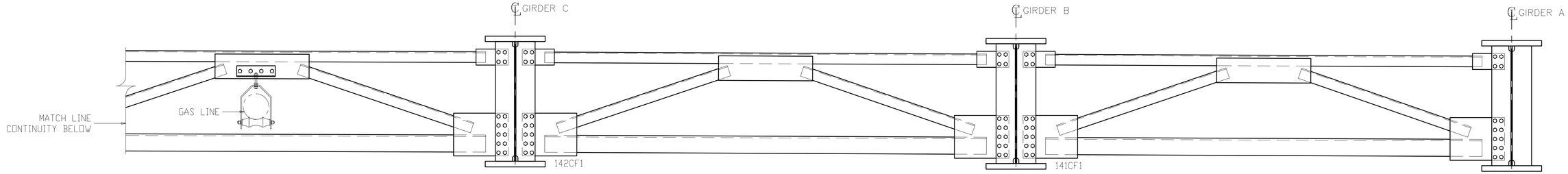

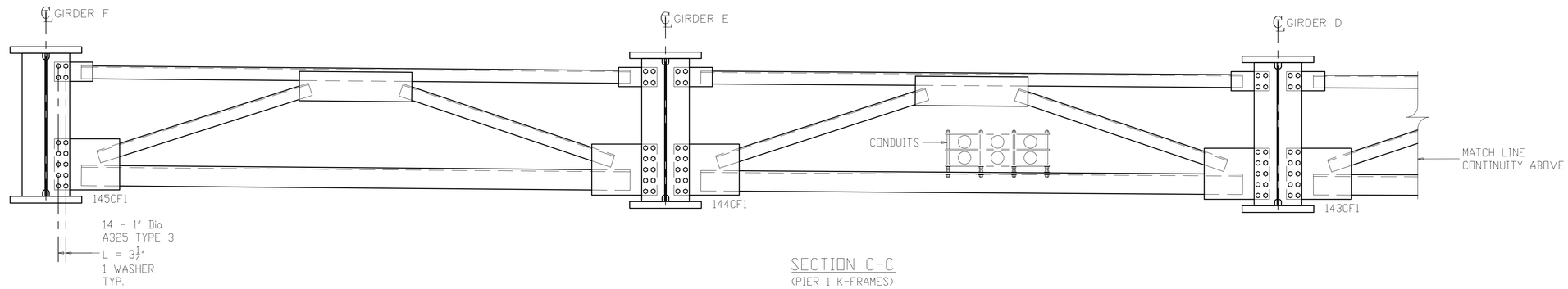

SECTION C-C
(PIER 1 K-FRAMES)

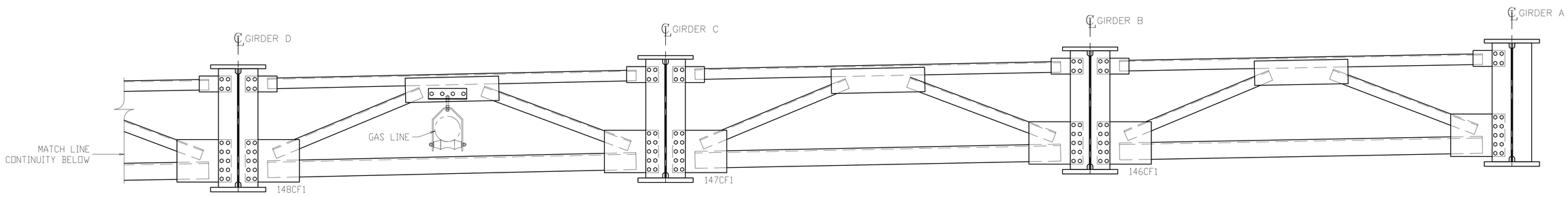

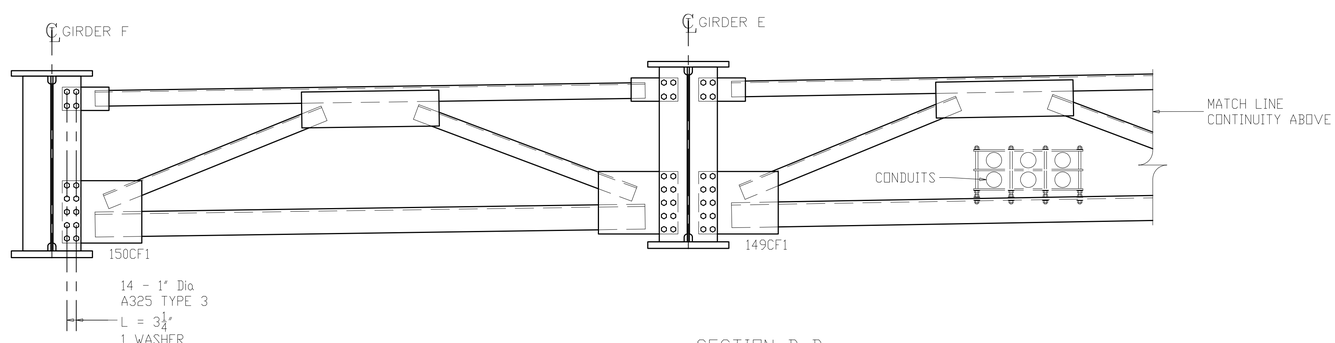

SECTION D-D
(PIER 2 K-FRAMES)

ALL STEEL SHALL BE ERECTED WITH THE 'SHIPPING MARK' IN THE SAME RELATIVE POSITION AS SHOWN ON THE ERECTION PLAN

NOTES:
1. FOR GENERAL NOTES SEE SHEET GN101.
2. ALL MATERIAL A709-50WT2 (UN)

NO.	DATE	REMARKS	BY

REVISIONS

Veritas STEEL
2-EAU CLAIRE, WI 3-WAUSAU, WI 4-PALATKA, FL
TENCA 1605

STRUCTURE	CUY-010-1978R, OH-10 EASTBOUND OVER GCRTA BLUE AND GREEN LINES
LOCATION	CLEVELAND, OHIO CUYAHOGA COUNTY
PROJECT NO.	17-3000
ENGINEER	MICHAEL BAKER INTERNATIONAL
CONTRACTOR	KOKOSING
ITEM	ERECTION PLAN - SECTIONS
SURFACE PREP.	SEE P101
OPEN HOLES	$1\frac{1}{16}$"Ø (U.N.O.)
PAINT	SEE P101

APPROVAL	DRAWN AM 05/09/19	SHEET NO.	PLANT	ORDER NO.
SHOP	CHECKED DP 06/12/19	E104	3	317023A

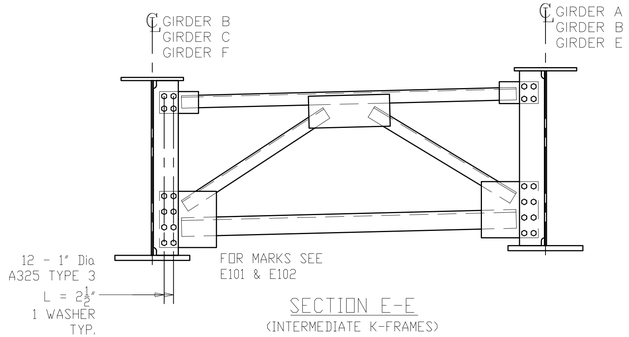

SECTION E-E
(INTERMEDIATE K-FRAMES)

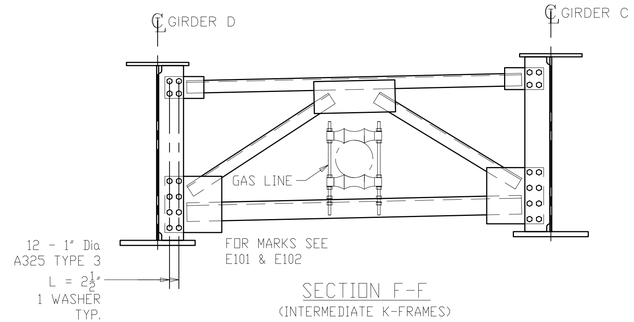

SECTION F-F
(INTERMEDIATE K-FRAMES)

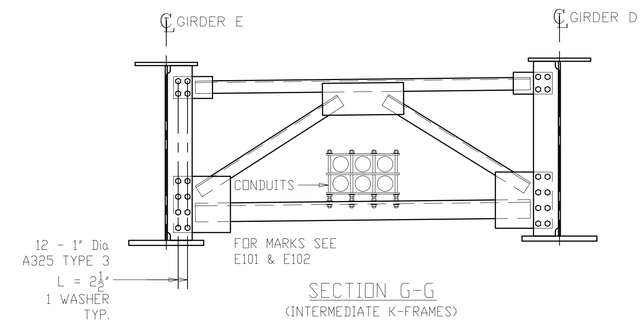

SECTION G-G
(INTERMEDIATE K-FRAMES)

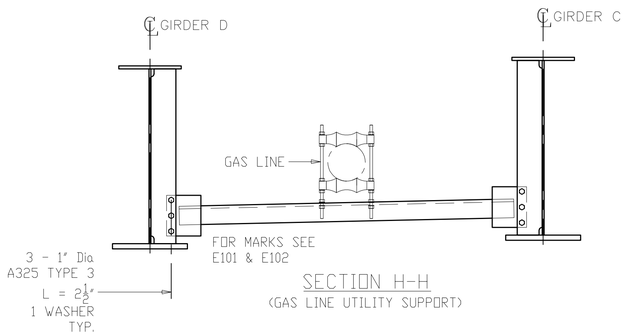

SECTION H-H
(GAS LINE UTILITY SUPPORT)

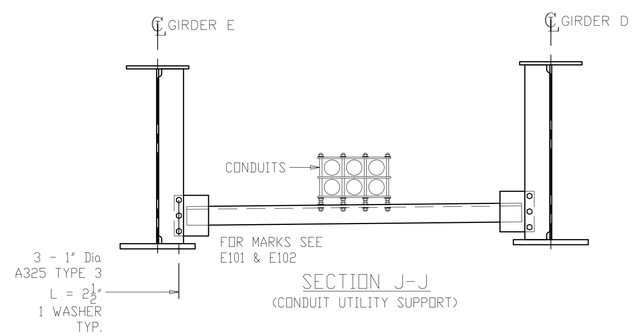

SECTION J-J
(CONDUIT UTILITY SUPPORT)

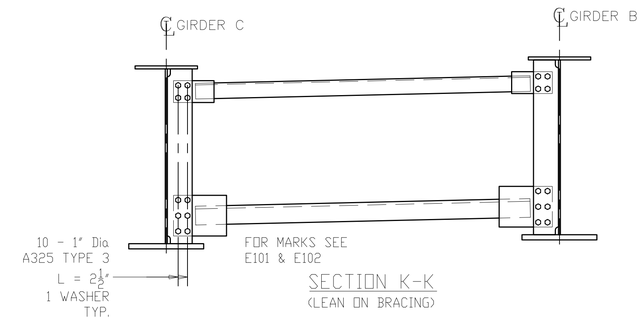

SECTION K-K
(LEAN ON BRACING)

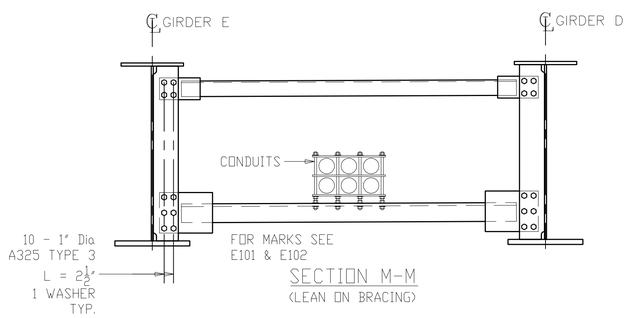

SECTION M-M
(LEAN ON BRACING)

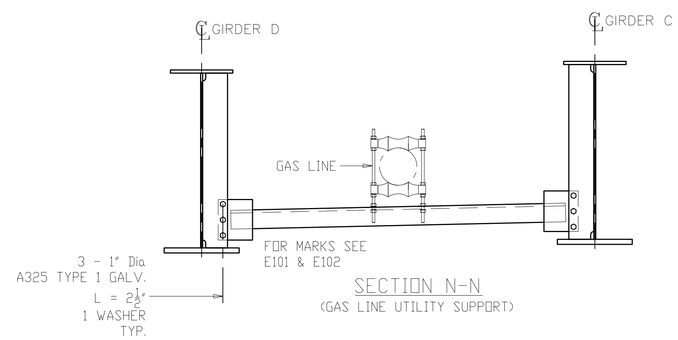

SECTION N-N
(GAS LINE UTILITY SUPPORT)

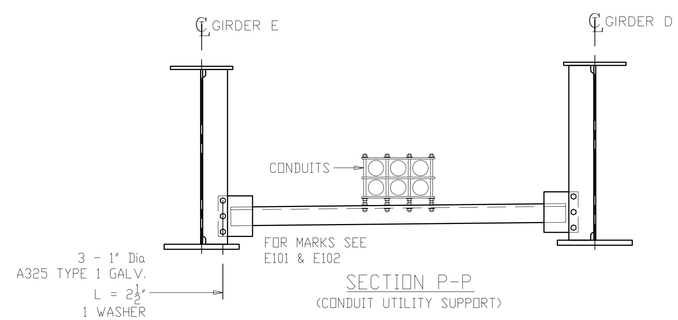

SECTION P-P
(CONDUIT UTILITY SUPPORT)

ALL STEEL SHALL BE ERECTED WITH THE "SHIPPING MARK" IN THE SAME RELATIVE POSITION AS SHOWN ON THE ERECTION PLAN

NOTES:
1. FOR GENERAL NOTES SEE SHEET GN101.
2. ALL MATERIAL A709-50WT2 (UN)

NO.	DATE	REMARKS	BY
1	11/01/19	AS PER APPROVAL COMMENTS	DP

REVISIONS

Veritas STEEL
2-EAU CLAIRE, WI 3-WAUSAU, WI 4-PALATKA, FL
TENCA 1605

STRUCTURE	CUY-010-1978R, OH-10 EASTBOUND OVER GCRTA BLUE AND GREEN LINES
LOCATION	CLEVELAND, OHIO CUYAHOGA COUNTY
PROJECT NO.	17-3000
ENGINEER	MICHAEL BAKER INTERNATIONAL
CONTRACTOR	KOKOSING
ITEM	ERECTION PLAN - SECTIONS
SURFACE PREP.	SEE P101
OPEN HOLES	1 1/16"Ø (U.N.O.)
PAINT	SEE P101

APPROVAL	DRAWN AM 05/09/19	SHEET NO.	PLANT	ORDER NO.
SHOP	CHECKED DP 06/12/19	E105	3	317023A

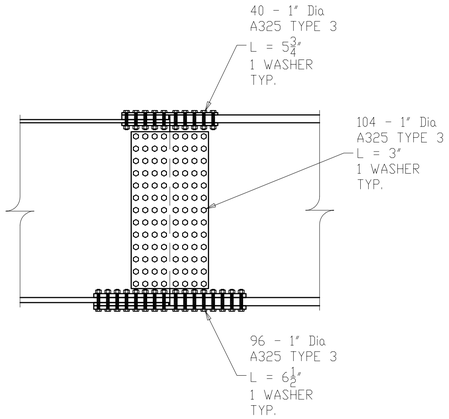

FIELD SPLICE #1
(X101M1)

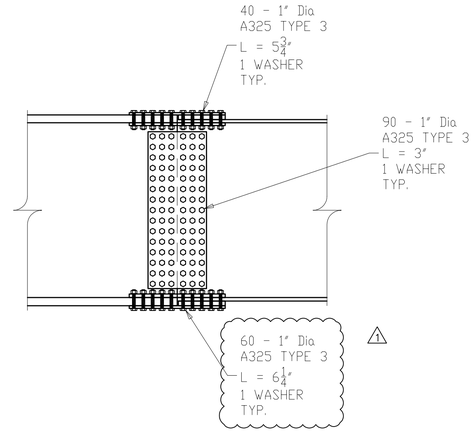

FIELD SPLICE #2
(X101M2)

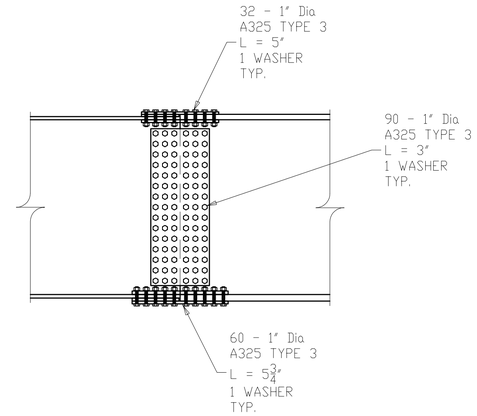

FIELD SPLICE #3
(X102M1)

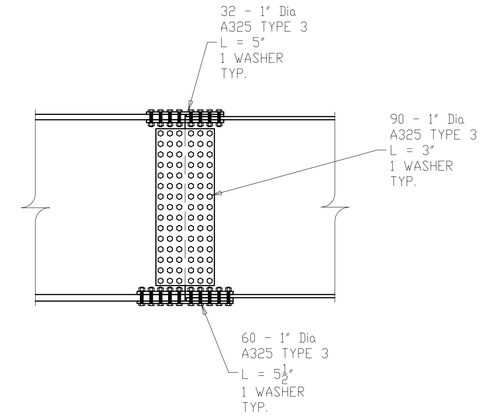

FIELD SPLICE #4
(X102M2)

NOTES:
1. FOR GENERAL NOTES SEE SHEET GN101.
2. ALL MATERIAL A709-50WT2 (UN)

ALL STEEL SHALL BE ERECTED WITH THE "SHIPPING MARK" IN THE SAME RELATIVE POSITION AS SHOWN ON THE ERECTION PLAN

NO.	DATE	REMARKS	BY
1	11/01/19	AS PER APPROVAL COMMENTS	DP

REVISIONS

Veritas STEEL
2-EAU CLAIRE, WI 3-WAUSAU, WI 4-PALATKA, FL
IAS NDT 1605

STRUCTURE	CUY-010-1978R, OH-10 EASTBOUND OVER GCRTA BLUE AND GREEN LINES
LOCATION	CLEVELAND, OHIO CUYAHOGA COUNTY
PROJECT NO.	17-3000
ENGINEER	MICHAEL BAKER INTERNATIONAL
CONTRACTOR	KOKOSING
ITEM	ERECTION PLAN - FIELD SPLICES
SURFACE PREP.	SEE P101
OPEN HOLES	1 1/16"Ø (U.N.O.)
PAINT	SEE P101

APPROVAL	DRAWN AM 05/09/19	SHEET NO.	PLANT	ORDER NO.
SHOP	CHECKED DP 06/12/19	E106	3	317023A

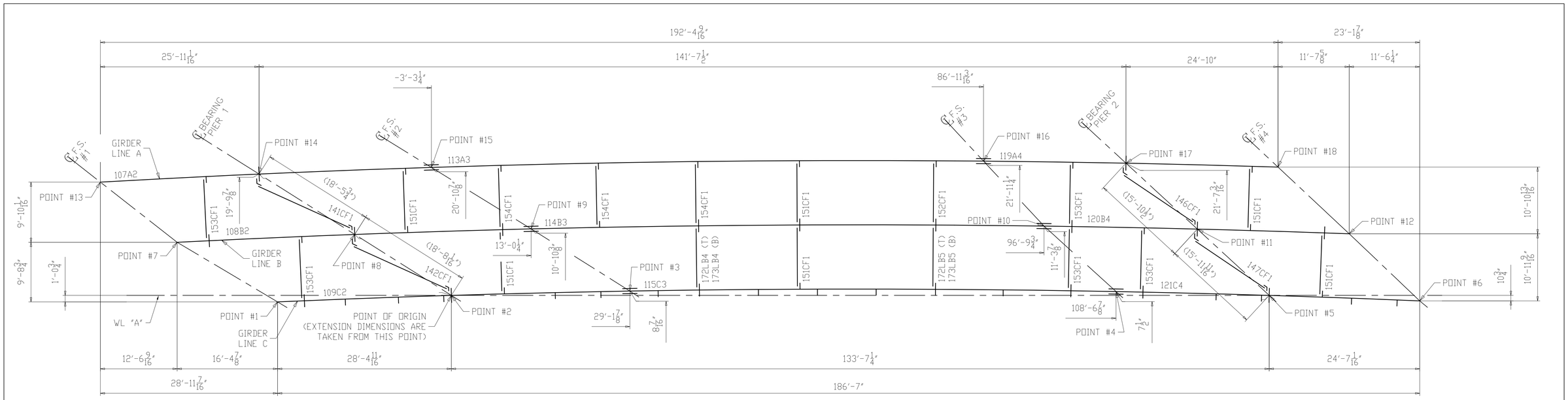

PLAN OF ASSEMBLY

ASSEMBLY IS IN TRUE FIELD POSITION

NO OUT OF PLUMB

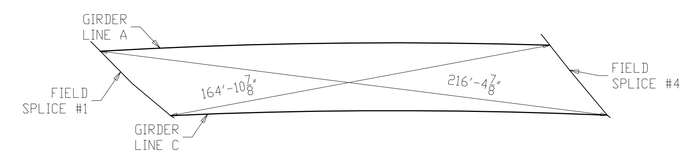

CROSS CORNER CHECK DIMENSIONS

POINT	TOP OF STEEL	BOTTOM OF STEEL
#1	5'-7 3/4"	6 5/8"
#2	6'-1 1/8"	1'-0"
#3	6'-6 9/16"	1'-5 7/16"
#4	6'-8 7/16"	1'-8 9/16"
#5	6'-5 3/8"	1'-5 1/2"
#6	6'-1 13/16"	1'-1 15/16"
#7	5'-6 7/16"	5 5/16"
#8	6'-0 3/16"	11 1/16"
#9	6'-6 11/16"	1'-5 9/16"
#10	6'-11 5/8"	1'-11 3/4"
#11	6'-9 5/16"	1'-9 7/16"
#12	6'-6 11/16"	1'-6 13/16"
#13	5'-6 1/8"	5"
#14	5'-11 1/4"	10 1/8"
#15	6'-6 3/16"	1'-5 1/16"
#16	7'-2 1/2"	2'-2 5/8"
#17	7'-0 7/8"	2'-1"
#18	6'-11 1/16"	1'-11 3/16"

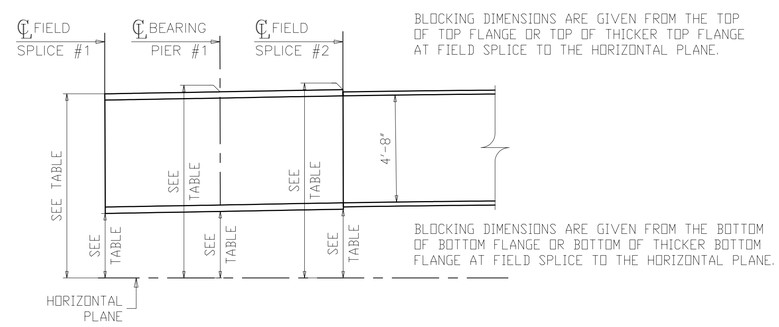

TYPICAL GIRDER ELEVATIONS

NOTES:
1. FOR GENERAL NOTES SEE SHEET GN101.
2. ALL DIMENSIONS ALONG AND PERPENDICULAR TO WL "A" ARE GIVEN IN THE HORIZONTAL PLANE AT THE BOTTOM OF BOTTOM FLANGE.
3. (18'-5 3/4") DENOTES DISTANCE C/C GIRDER ALONG CL BRG. IN THE HORIZONTAL PLANE.
4. EXTENSION DIMENSIONS ARE TAKEN FROM POINT OF ORIGIN.

NO.	DATE	REMARKS	BY
△			

REVISIONS

Veritas STEEL
2-EAU CLAIRE, WI 3-WAUSAU, WI 4-PALATKA, FL
TENCA 1605

STRUCTURE	CUY-010-1978R, OH-10 EASTBOUND OVER GCRTA BLUE AND GREEN LINES
LOCATION	CLEVELAND, OHIO CUYAHOGA COUNTY
PROJECT NO.	17-3000
ENGINEER	MICHAEL BAKER INTERNATIONAL
CONTRACTOR	KOKOSING
ITEM	FULL ASSEMBLY DIAGRAM
SURFACE PREP.	SEE P101
OPEN HOLES	1 1/16"Ø (U.N.O.)
PAINT	SEE P101

APPROVAL	DRAWN AM 07/31/19	SHEET NO.	PLANT	ORDER NO.
SHOP	CHECKED EG 08/01/19	FA101	3	317023A

LINE	SHIP MARK	NO. OF PCS.	ASS'Y MARK	MATERIAL SHAPE	LENGTH FT.	LENGTH IN.	MATERIAL SPEC.	ITEM NO.	REMARKS
1				FIELD BOLT					5% + 5 ADDED
2		2244	bgf3	1Ø HSB		2 1/2	A325-3	1156	ACT. CT.=2132 PLAIN
3		2361	bgk3	1Ø HSB		3	A325-3	1157	ACT. CT.=2244 PLAIN
4		299	bgm3	1Ø HSB		3 1/4	A325-3	1158	ACT. CT.=280 PLAIN
5		408	bka3	1Ø HSB		5	A325-3	1159	ACT. CT.=384 PLAIN
6		383	bkc3	1Ø HSB		5 1/2	A325-3	1160	ACT. CT.=360 PLAIN
7		887	bkd3	1Ø HSB		5 3/4	A325-3	1161	ACT. CT.=840 PLAIN
8		383	bkf3	1Ø HSB		6 1/4	A325-3	1162	ACT. CT.=360 PLAIN
9		610	bkg3	1Ø HSB		6 1/2	A325-3	1163	ACT. CT.=576 PLAIN
10		7575	nd3	1Ø HHN			A563-DH3	1164	PLAIN
11		7575	wd3	1Ø HSW			F436-3	1165	PLAIN
12		136	bgf2	1Ø HSB		2 1/2	A325-1	1209	ACT. CT.=124 GALV.
13		136	nd2	1Ø HHN			A563-DH	1210	GALV.
14		136	wd2	1Ø HSW			F436-1	1211	GALV.

ROTATIONAL CAPACITY TESTING REQUIRED

FIELD BOLT LIST						A325 TYPE 3 BOLTS								
LINE	NO REQ'D	BOLT DIAM.	BOLT LEN.	BOLTS /CONN.	NO OF /CONN.	GRIP	THICK. OF PCS. CONNECTED						WASH CODE	PIECES CONNECTED AND REMARKS
1														
2	280	1"	3 1/4"	28	10	1 1/8"	1/2"	1 1/8"					1	PIER K-FRAMES TO GIRDER
3	1680	1"	2 1/2"	24	70	1"	1/2"	1/2"					1	INTERMEDIATE K-FRAMES TO GIRDER
4	252	1"	2 1/2"	6	42	1"	1/2"	1/2"					1	GAS LINE AND CONDUIT UTILITY SUPPORT TO GIRDER
5	200	1"	2 1/2"	20	10	1"	1/2"	1/2"					1	LEAN ON BRACING TO GIRDER
6	480	1"	5 3/4"	40	12	4 1/8"	3/4"	2 1/2"	7/8"				1	TOP FLANGE - FIELD SPLICE #1 & #2
7	384	1"	5"	32	12	3 3/8"	3/4"	1 3/4"	7/8"				1	TOP FLANGE - FIELD SPLICE #3 & #4
8	624	1"	3"	104	6	1 1/2"	7/16"	5/8"	7/16"				1	WEB - FIELD SPLICE #1
9	1620	1"	3"	90	18	1 3/8"	3/8"	5/8"	3/8"				1	WEB - FIELD SPLICE #2, #3 & #4
10	576	1"	6 1/2"	96	6	5"	1 1/4"	2 5/8"	1 1/8"				1	BOTTOM FLANGE - FIELD SPLICE #1
11	360	1"	6 1/4"	60	6	4 5/8"	1 1/8"	2 5/8"	7/8"				1	BOTTOM FLANGE - FIELD SPLICE #2
12	360	1"	5 3/4"	60	6	4 1/8"	1 1/8"	2 1/8"	7/8"				1	BOTTOM FLANGE - FIELD SPLICE #3
13	360	1"	5 1/2"	60	6	3 7/8"	1"	2 1/8"	3/4"				1	BOTTOM FLANGE - FIELD SPLICE #4
WASHER CODES: 1 = 1 HARD FLAT WASHER														

FIELD BOLT LIST						A325 TYPE 1 GALV. BOLTS								
LINE	NO REQ'D	BOLT DIAM.	BOLT LEN.	BOLTS /CONN.	NO OF /CONN.	GRIP	THICK. OF PCS. CONNECTED						WASH CODE	PIECES CONNECTED AND REMARKS
1	100	1"	2 1/2"	10	10	1"	1/2"	1/2"					1	ABUTMENT K-FRAMES TO GIRDER
2	24	1"	2 1/2"	6	4	1"	1/2"	1/2"					1	GAS LINE AND CONDUIT UTILITY SUPPORT TO GIRDER
WASHER CODES: 1 = 1 HARD FLAT WASHER														

NOTES:
1. FOR GENERAL NOTES SEE SHEET GN101.

NO.	DATE	REMARKS	BY
1	11/01/19	AS PER APPROVAL COMMENTS	DP

REVISIONS

Veritas STEEL
2-EAU CLAIRE, WI 3-WAUSAU, WI 4-PALATKA, FL
IAS 1605

STRUCTURE: CUY-010-1978R, OH-10 EASTBOUND OVER GCRTA BLUE AND GREEN LINES
LOCATION: CLEVELAND, OHIO CUYAHOGA COUNTY
PROJECT NO.: 17-3000
ENGINEER: MICHAEL BAKER INTERNATIONAL
CONTRACTOR: KOKOSING

ITEM: FIELD BOLTS
SURFACE PREP.: SEE P101 OPEN HOLES: 1 1/16"Ø (U.N.O.)
PAINT: SEE P101

APPROVAL	DRAWN AM 05/10/19	SHEET NO.	PLANT	ORDER NO.
SHOP	CHECKED DP 06/12/19	FB101	3	317023A-86

GENERAL NOTES

GENERAL SPECIFICATIONS:

1. THE STANDARD SPECIFICATIONS OF THE STATE OF OHIO, DEPARTMENT OF TRANSPORTATION, INCLUDING CHANGES AND SUPPLEMENTAL SPECIFICATIONS LISTED IN THE PROPOSAL SHALL GOVERN THIS IMPROVEMENT.
2. THIS STRUCTURE CONFORMS TO THE "LRFD BRIDGE DESIGN SPECIFICATIONS", 7TH EDITION, ADOPTED BY THE AMERICAN ASSOCIATION OF STATE HIGHWAY AND TRANSPORTATION OFFICIALS, SEVENTH EDITION, INCLUDING THE 2015 INTERIM REVISIONS AND ODOT BRIDGE DESIGN MANUAL, 2007 (DATED 07-15-16).
3. CURRENT EDITION OF THE ANSI/AASHTO/AWS D1.5 BRIDGE WELDING CODE AS AMENDED BY SUPPLEMENT 1011.

MATERIAL SPECIFICATIONS:

1. ALL STRUCTURAL STEEL SHALL BE ASTM A709 GRADE 50W, UNLESS NOTED OTHERWISE.
2. FOR NOT PAINTED CONNECTIONS HIGH STRENGTH BOLTS SHALL BE A325 TYPE 3 WITH ASTM F436-3 WASHERS AND ASTM A563 GRADE DH3 NUTS.
   FOR CONNECTIONS WITHIN THE 10' PAINTING LIMITS HIGH STRENGTH BOLTS SHALL BE A325 TYPE 1 GALVANIZED WITH ASTM F436-1 GALV. WASHERS AND ASTM A563 GRADE DH GALV. NUTS. (1)

MATERIAL TESTING:

1. ALL ITEMS DESIGNATED AS "CVN" OR "T2" ON THE SHOP DETAIL DRAWINGS SHALL MEET THE ZONE 2 CHARPY V-NOTCH TESTING REQUIREMENTS NOTED BELOW:

- A709-50WT2 (THK UP 2") : 15 FT-LBS @ 40°F "H" FREQ.
- A709-50WT2 (THK OVER 2") : 20 FT-LBS @ 40°F "H" FREQ.

FABRICATION:

1. BOLT HEADS SHALL BE PLACED ON THE EXPOSED SIDE OF THE EXTERIOR GIRDER WEBS AND THE BOTTOM SIDE OF THE GIRDER FLANGES WHEREVER POSSIBLE
2. THE METHOD OF TIGHTENING SHALL BE TURN OF NUT. A HARDENED WASHER SHALL BE PLACED UNDER THE TURNED NUT.
3. THREADS SHALL BE EXCLUDE FROM THE SHEAR PLANE.
4. PREPARE FAYING SURFACES OF LEAN ON BRACING, PIER, ABUTMENT AND INTERMEDIATE K-FRAME BOLTED CONNECTIONS TO PROVIDE CLASS B SURFACES.
5. SPLICE PLATE EDGE DISTANCES REQUIRE GAS CUT OR ROLLED EDGES.

WELDING:

1. WELDING SHALL BE IN ACCORDANCE WITH THE CURRENT EDITION OF THE ANSI/AASHTO/AWS D1.5 BRIDGE WELDING CODE AS AMENDED BY SUPPLEMENT 1011.
2. FILLET WELDS SHALL BE TERMINATED AS SHOWN IN DETAILS "WS1" & "WS2".
3. ALL SHEAR STUDS TO BE APPLIED IN THE FIELD BY OTHERS.
4. WELD DESCRIPTION TABLE :

WELD JOINTS	WP	VERITAS WPS #
WEB & FLG CJP BUTTWELDS $\frac{1}{2}$" TO 2"	WP1	2W
WEB & FLG CJP BUTTWELDS OVER 2"	WP2	3W
WEB TO FLANGE FILLET WELDS	WP3	6W OR 6BW
STIFFENER TO WEB FILLET WELDS	WP4	5W OR 7W
STIFFENER TO FLANGE FILLET WELDS	WP5	4W1 OR 5W OR 8W
CROSS FRAME FILLET WELDS	WP6	4W1 OR 5W OR 8W
OTHER MISC. FILLET WELDS	WP7	4W1 OR 5W OR 8W

WELD INSPECTION:

1. "RT" - INDICATES RADIOGRAPH TESTING.
2. "MT" - INDICATES MAG-PARTICLE INSPECTION.
3. FILLET WELDS SHALL BE TESTED AS FOLLOWS:
   -MT: AT LEAST 1' IN EVERY 10', OR FRACTION THEREOF, FOR EACH SIZE OF WELD IN: FLANGE TO WEB WELDS INCLUDING ENDS OF GIRDERS AFTER TRIMMING, BEARING STIFFENERS WELDS, CROSS FRAME WELDS AND THOSE SPECIFIED IN THE D1.5.
4. BUTT WELDS SHALL BE TESTED AS FOLLOWS:
   -BUTT WELDS IN GIRDER WEBS: RT 100% TOP AND BOTTOM 1/3 OF ALL WEB BUTT WELDS.
   -BUTT WELDS IN GIRDER COMPRESSION FLANGES: RT 100% FULL LENGTH OF ALL FLANGE BUTT WELDS.
   -BUTT WELDS IN GIRDER TENSION FLANGES: RT 100% FULL LENGTH OF ALL FLANGE BUTT WELDS.

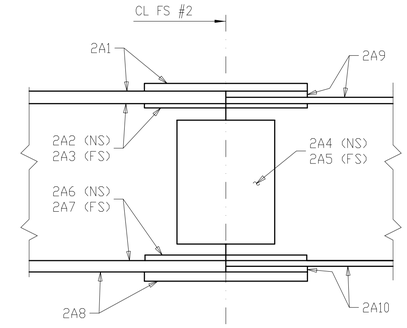

SHOP MATCH MARKING SCHEME

SHOP TO PREFIX MATCH-MARKS WITH LINE MARK

EXAMPLE 2 A 1
F.S. NUMBER — LINE — PART IDEN.

SHOP NOTE FOR MATCH MARKING SPLICE MATERIAL

THE INTERSECTION OF A GIRDER LINE LETTER AND JOINT NUMBER WILL FORM AN IDENTIFICATION MATCH (EXAMPLE FS #2). THIS MARK WILL BE PLACED ON THE ENDS OF THE GIRDERS AT THE FIELD SPLICES. ALL SPLICE MATR'L WILL BE MARKED WITH THE IDENTIFICATION MATCH MARK PLUS A DIFFERENT SUFFIX NUMERAL FOR EACH INDIVIDUAL PIECE OF SPLICE MATR'L. (EXAMPLE: 2A1) CORRESPONDING MARKS ALSO WILL BE AFFIXED ON THE GIRDERS. THE MARKS MUST BE POSITIONED TO PREVENT INTER-CHANGE OR ROTATION OF THE SPLICE MATR'L. MATCH MARKS SHALL BE PLACED ON THE OUTSIDE FACE OF THE SPLICE MATR'L WITH MARKS OPPOSITE EACH OTHER IN AN OFFCENTER OF PLATE POSITION AND SHALL BE CLEARLY MADE WITH 1/2" SIZE STEEL NUMBERING DIES.

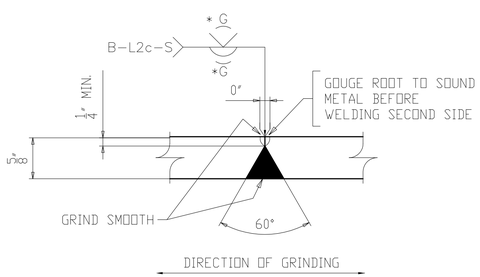

WEB PLATE SPLICE DETAIL "WB"

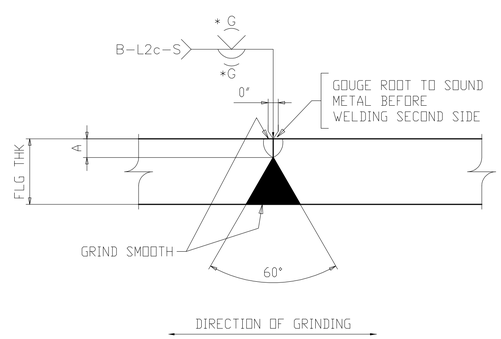

FLG THK	"A"
1"	$\frac{1}{4}$"
$1\frac{1}{8}$"	$\frac{3}{8}$"
$1\frac{5}{8}$"	$\frac{1}{2}$"

FLANGE PLATE SPLICE DETAIL "FA"

* GRIND WEB SPLICES ONLY WHERE RADIOGRAPHED, EXCEPT GRIND OUTSIDE FASCIA SURFACES THE FULL ASSEMBLY AND ALL BOTTOMS OF TOP AND BOTTOM FLANGES.

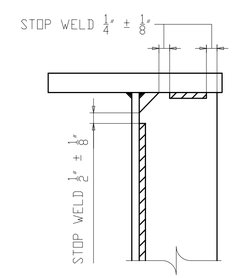

DETAIL "WS1"

STIFF. WELD TERMINATION

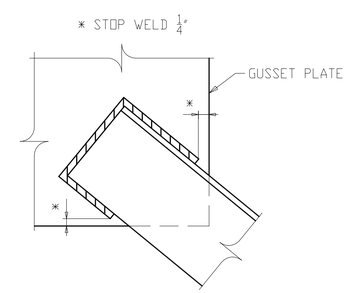

DETAIL "WS2"

CROSSFRAME WELD TERMINATION

NOTE TO ENGINEER:
THESE NOTES ARE NOT INTENDED TO BE ALL INCLUSIVE AND COMPLIANCE WITH RELEVANT SPECIFICATIONS REMAIN UNCHANGED.

NO.	DATE	REMARKS	BY
1	11/01/19	AS PER APPROVAL COMMENTS	DP

REVISIONS

Veritas STEEL
2-EAU CLAIRE, WI 3-WAUSAU, WI 4-PALATKA, FL
IENCA 1605

STRUCTURE	CUY-010-1978R, OH-10 EASTBOUND OVER GCRTA BLUE AND GREEN LINES
LOCATION	CLEVELAND, OHIO CUYAHOGA COUNTY
PROJECT NO.	17-3000
ENGINEER	MICHAEL BAKER INTERNATIONAL
CONTRACTOR	KOKOSING
ITEM	GENERAL NOTES
SURFACE PREP.	SEE P101 OPEN HOLES $1\frac{1}{16}$"Ø (U.N.O.)
PAINT	SEE P101

APPROVAL	DRAWN AM 05/08/19	SHEET NO.	PLANT	ORDER NO.
SHOP	CHECKED DP 06/20/19	GN101	3	317023A

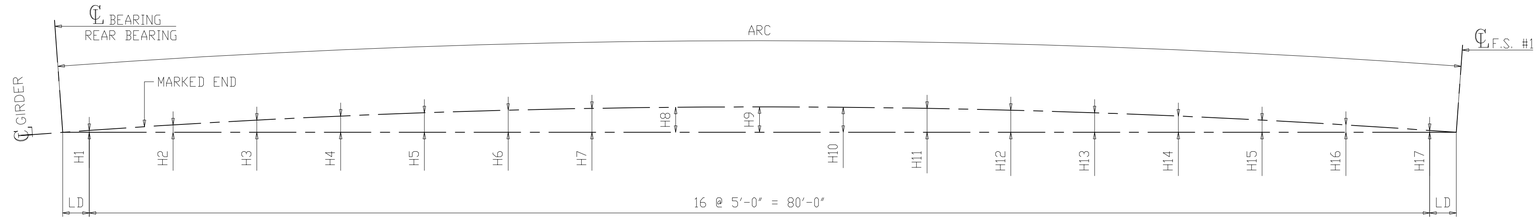

HORIZONTAL CURVE DIAGRAM FOR 101A1 & 102B1

(DIMENSIONS ARE ALONG BOTTOM OF WEB)

MARK	ARC	LD	H1	H2	H3	H4	H5	H6	H7	H8	H9	H10	H11	H12	H13	H14	H15	H16	H17
101A1	83'-7 3/8"	1'-9 11/16"	3/8"	1 7/16"	2 5/16"	3 1/16"	3 11/16"	4 3/16"	4 1/2"	4 3/4"	4 13/16"	4 3/4"	4 1/2"	4 3/16"	3 11/16"	3 1/16"	2 5/16"	1 7/16"	3/8"
102B1	87'-10 3/4"	3'-11 5/16"	15/16"	1 15/16"	2 13/16"	3 5/8"	4 1/4"	4 11/16"	5 1/16"	5 1/4"	5 5/16"	5 1/4"	5 1/16"	4 11/16"	4 1/4"	3 5/8"	2 13/16"	1 15/16"	15/16"

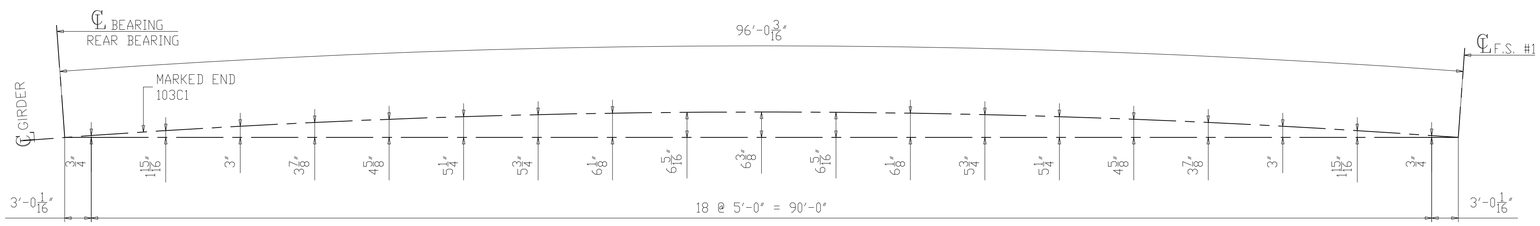

HORIZONTAL CURVE DIAGRAM FOR 103C1

(DIMENSIONS ARE ALONG BOTTOM OF WEB)

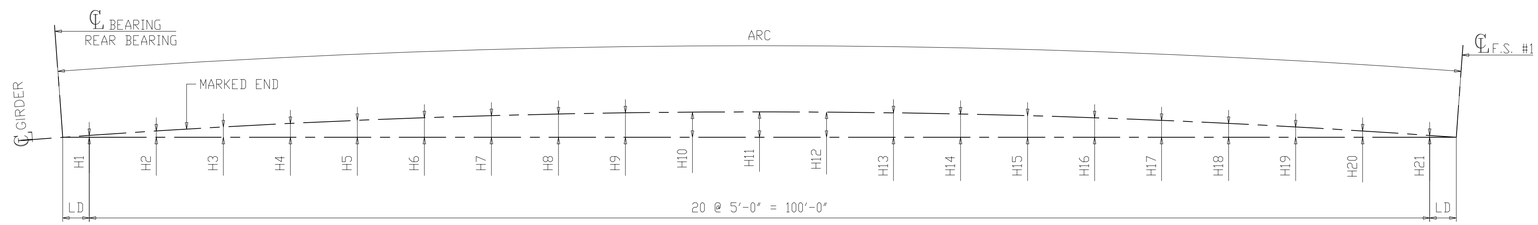

HORIZONTAL CURVE DIAGRAM FOR 104D1 & 105E1

(DIMENSIONS ARE ALONG BOTTOM OF WEB)

MARK	ARC	LD	H1	H2	H3	H4	H5	H6	H7	H8	H9	H10	H11	H12	H13	H14	H15	H16	H17	H18	H19	H20	H21
104D1	103'-11 5/8"	1'-11 3/4"	9/16"	1 7/8"	3 1/16"	4 1/8"	5"	5 3/4"	6 3/8"	6 7/8"	7 1/4"	7 7/16"	7 1/2"	7 7/16"	7 1/4"	6 7/8"	6 3/8"	5 3/4"	5"	4 1/8"	3 1/16"	1 7/8"	9/16"
105E1	109'-7 3/4"	4'-9 13/16"	1 7/16"	2 3/4"	3 15/16"	5"	5 7/8"	6 5/8"	7 5/16"	7 3/4"	8 1/8"	8 5/16"	8 3/8"	8 5/16"	8 1/8"	7 3/4"	7 5/16"	6 5/8"	5 7/8"	5"	3 15/16"	2 3/4"	1 7/16"

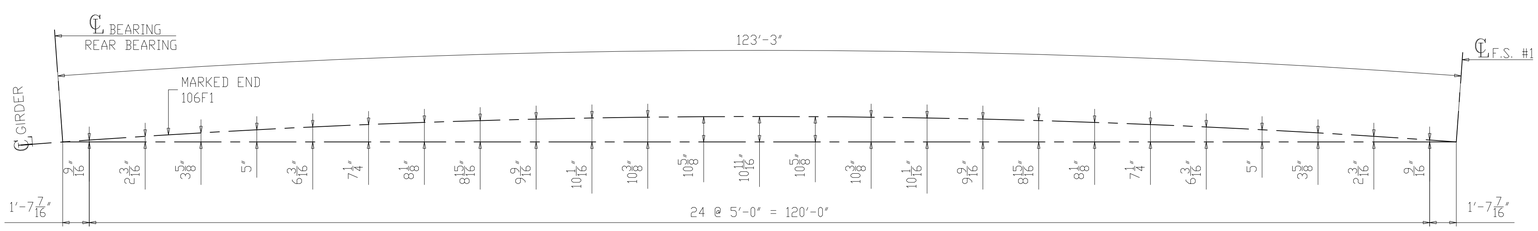

HORIZONTAL CURVE DIAGRAM FOR 106F1

(DIMENSIONS ARE ALONG BOTTOM OF WEB)

NO.	DATE	REMARKS	BY

REVISIONS

Veritas STEEL
2-EAU CLAIRE, WI 3-WAUSAU, WI 4-PALATKA, FL
TENCA 1605

STRUCTURE	CUY-010-1978R, OH-10 EASTBOUND OVER GCRTA BLUE AND GREEN LINES
LOCATION	CLEVELAND, OHIO CUYAHOGA COUNTY
PROJECT NO.	17-3000
ENGINEER	MICHAEL BAKER INTERNATIONAL
CONTRACTOR	KOKOSING
ITEM	HORIZONTAL CURVING DIAGRAMS
SURFACE PREP.	SEE P101
OPEN HOLES	1 1/16"Ø (U.N.O.)
PAINT	SEE P101

APPROVAL	DRAWN AM 05/22/19	SHEET NO.	PLANT	ORDER NO.
SHOP	CHECKED DP 05/31/19	HC101	3	317023A

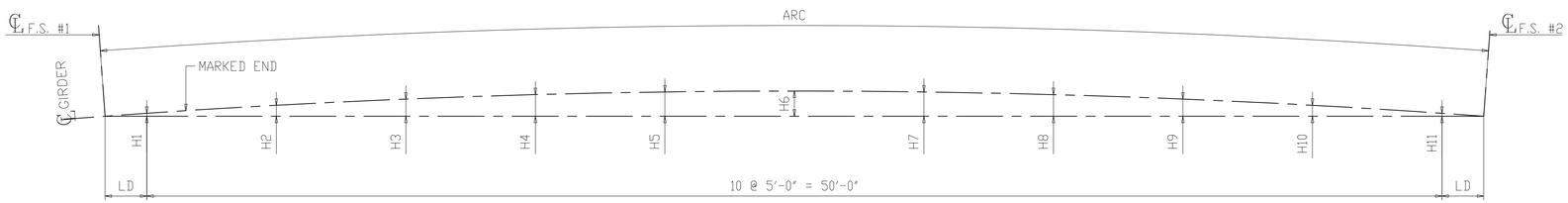

HORIZONTAL CURVE DIAGRAM FOR
107A2, 108B2, 109C2, 110D2, 111E2 & 112F2

(DIMENSIONS ARE ALONG BOTTOM OF WEB)

MARK	ARC	LD	H1	H2	H3	H4	H5	H6	H7	H8	H9	H10	H11
107A2	54'-1 11/16"	2'-0 13/16"	5/16"	15/16"	1 3/8"	1 3/4"	1 15/16"	2"	1 15/16"	1 3/4"	1 3/8"	15/16"	5/16"
108B2	57'-10 7/16"	3'-11 3/16"	9/16"	1 3/16"	1 11/16"	2 1/16"	2 1/4"	2 5/16"	2 1/4"	2 1/16"	1 11/16"	1 3/16"	9/16"
109C2	57'-7"	3'-9 1/2"	9/16"	1 3/16"	1 11/16"	2"	2 1/4"	2 5/16"	2 1/4"	2"	1 11/16"	1 3/16"	9/16"
110D2	56'-10 5/8"	3'-5 5/16"	1/2"	1 1/8"	1 5/8"	2"	2 3/16"	2 1/4"	2 3/16"	2"	1 5/8"	1 1/8"	1/2"
111E2	59'-1 5/16"	4'-6 11/16"	11/16"	1 5/16"	1 13/16"	2 3/16"	2 3/8"	2 7/16"	2 3/8"	2 3/16"	1 13/16"	1 5/16"	11/16"
112F2	50'-10 1/2"	5 1/4"	1/16"	11/16"	1 3/16"	1 9/16"	1 3/4"	1 13/16"	1 3/4"	1 9/16"	1 3/16"	11/16"	1/16"

NO.	DATE	REMARKS	BY
△			

REVISIONS

Veritas STEEL
2-EAU CLAIRE, WI 3-WAUSAU, WI 4-PALATKA, FL
IAS 1605

STRUCTURE: CUY-010-1978R, OH-10 EASTBOUND OVER GCRTA BLUE AND GREEN LINES
LOCATION: CLEVELAND, OHIO CUYAHOGA COUNTY
PROJECT NO.: 17-3000
ENGINEER: MICHAEL BAKER INTERNATIONAL
CONTRACTOR: KOKOSING

ITEM: HORIZONTAL CURVING DIAGRAMS
SURFACE PREP.: SEE P101 OPEN HOLES: 1 1/16"Ø (U.N.O.)
PAINT: SEE P101

APPROVAL	DRAWN AM 05/22/19	SHEET NO.	PLANT	ORDER NO.
SHOP	CHECKED DP 05/31/19	HC102	3	317023A

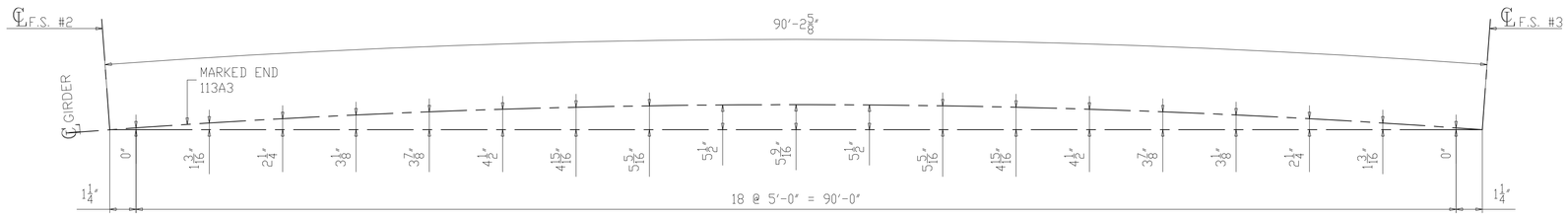

HORIZONTAL CURVE DIAGRAM FOR 113A3

(DIMENSIONS ARE ALONG BOTTOM OF WEB)

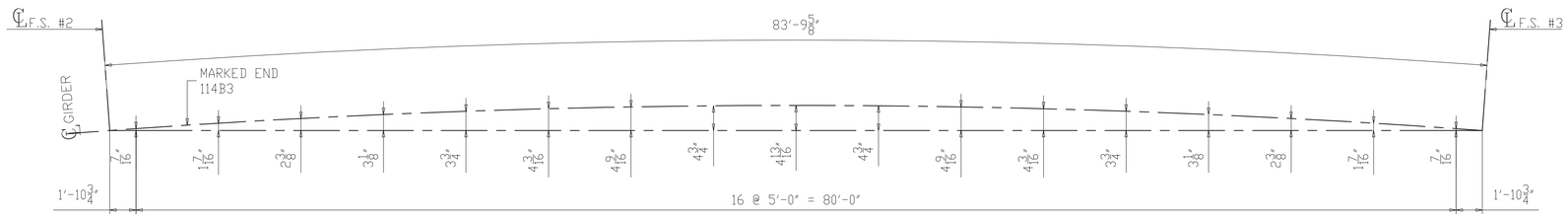

HORIZONTAL CURVE DIAGRAM FOR 114B3

(DIMENSIONS ARE ALONG BOTTOM OF WEB)

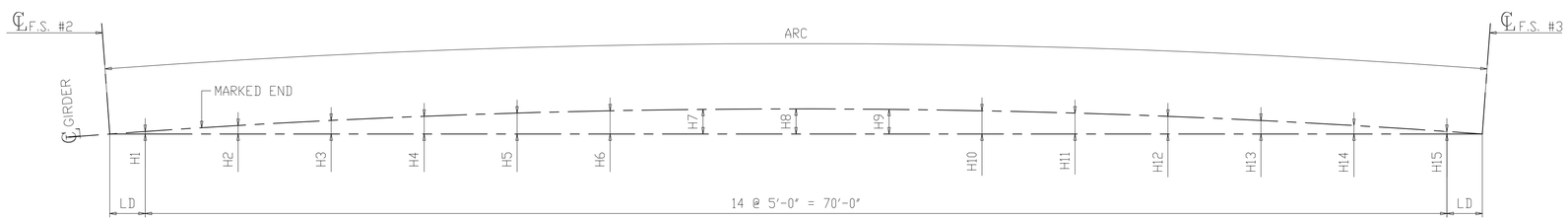

HORIZONTAL CURVE DIAGRAM FOR 115C3, 116D3 & 117E3

(DIMENSIONS ARE ALONG BOTTOM OF WEB)

MARK	ARC	LD	H1	H2	H3	H4	H5	H6	H7	H8	H9	H10	H11	H12	H13	H14	H15
115C3	79′-5 1/16″	4′-8 1/2″	1″	1 7/8″	2 5/8″	3 1/4″	3 3/4″	4 1/16″	4 5/16″	4 3/8″	4 5/16″	4 1/16″	3 3/4″	3 1/4″	2 5/8″	1 7/8″	1″
116D3	75′-6 1/16″	2′-9″	9/16″	1 7/16″	2 1/4″	2 7/8″	3 5/16″	3 11/16″	3 7/8″	3 15/16″	3 7/8″	3 11/16″	3 5/16″	2 7/8″	2 1/4″	1 7/16″	9/16″
117E3	71′-11 13/16″	11 7/8″	3/16″	1 1/8″	1 7/8″	2 1/2″	3″	3 5/16″	3 9/16″	3 5/8″	3 9/16″	3 5/16″	3″	2 1/2″	1 7/8″	1 1/8″	3/16″

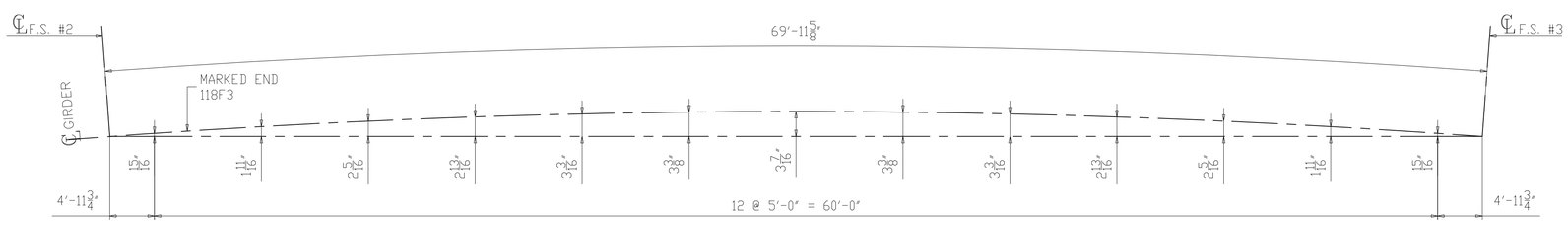

HORIZONTAL CURVE DIAGRAM FOR 118F3

(DIMENSIONS ARE ALONG BOTTOM OF WEB)

NO.	DATE	REMARKS	BY

REVISIONS

Veritas STEEL

2-EAU CLAIRE, WI 3-WAUSAU, WI 4-PALATKA, FL

NCA 1605

STRUCTURE: CUY-010-1978R, OH-10 EASTBOUND OVER GCRTA BLUE AND GREEN LINES

LOCATION: CLEVELAND, OHIO CUYAHOGA COUNTY

PROJECT NO.: 17-3000

ENGINEER: MICHAEL BAKER INTERNATIONAL

CONTRACTOR: KOKOSING

ITEM: HORIZONTAL CURVING DIAGRAMS

SURFACE PREP.: SEE P101 OPEN HOLES: 1 1/16″Ø (U.N.O.)

PAINT: SEE P101

APPROVAL	DRAWN AM 05/22/19	SHEET NO.	PLANT	ORDER NO.
SHOP	CHECKED DP 05/31/19	HC103	3	317023A

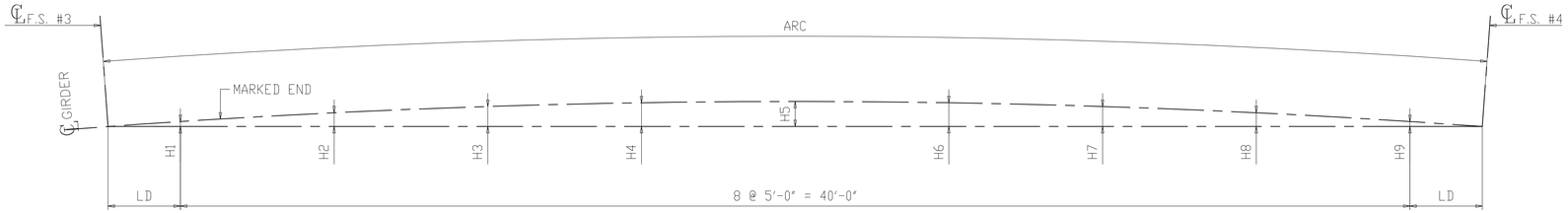

HORIZONTAL CURVE DIAGRAM FOR
119A4, 120B4, 121C4, 123E4 & 124F4
(DIMENSIONS ARE ALONG BOTTOM OF WEB)

MARK	ARC	LD	H1	H2	H3	H4	H5	H6	H7	H8	H9
119A4	48'-1 3/8"	4'-0 11/16"	1/2"	1"	1 5/16"	1 1/2"	1 9/16"	1 1/2"	1 5/16"	1"	1/2"
120B4	49'-10 9/16"	4'-11 5/16"	5/8"	1 1/8"	1 7/16"	1 5/8"	1 11/16"	1 5/8"	1 7/16"	1 1/8"	5/8"
121C4	49'-7 3/4"	4'-9 7/8"	5/8"	1 1/16"	1 7/16"	1 5/8"	1 11/16"	1 5/8"	1 7/16"	1 1/16"	5/8"
123E4	49'-6 1/2"	4'-9 1/4"	5/8"	1 1/16"	1 7/16"	1 5/8"	1 11/16"	1 5/8"	1 7/16"	1 1/16"	5/8"
124F4	47'-5 3/8"	3'-8 11/16"	7/16"	15/16"	1 5/16"	1 1/2"	1 9/16"	1 1/2"	1 5/16"	15/16"	7/16"

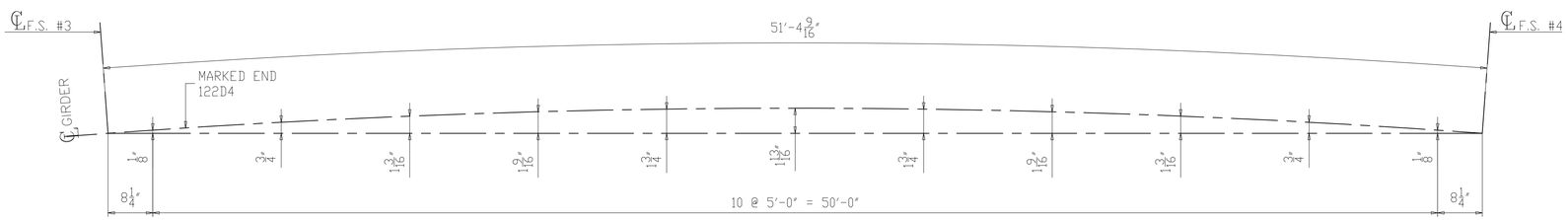

HORIZONTAL CURVE DIAGRAM FOR 122D4
(DIMENSIONS ARE ALONG BOTTOM OF WEB)

NO.	DATE	REMARKS	BY

REVISIONS

Veritas STEEL
2-EAU CLAIRE, WI 3-WAUSAU, WI 4-PALATKA, FL
TENCA 1605

STRUCTURE: CUY-010-1978R, OH-10 EASTBOUND OVER GCRTA BLUE AND GREEN LINES
LOCATION: CLEVELAND, OHIO CUYAHOGA COUNTY
PROJECT NO.: 17-3000
ENGINEER: MICHAEL BAKER INTERNATIONAL
CONTRACTOR: KOKOSING

ITEM: HORIZONTAL CURVING DIAGRAMS
SURFACE PREP.: SEE P101 OPEN HOLES: 1 1/16"ø (U.N.O.)
PAINT: SEE P101

APPROVAL	DRAWN AM 05/22/19	SHEET NO.	PLANT	ORDER NO.
SHOP	CHECKED DP 05/31/19	HC104	3	317023A

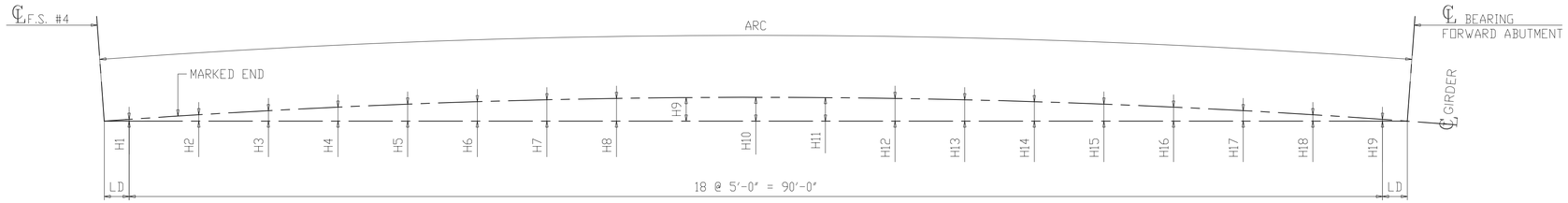

HORIZONTAL CURVE DIAGRAM FOR 125A5, 126B5 & 127C5

(DIMENSIONS ARE ALONG BOTTOM OF WEB)

MARK	ARC	LD	H1	H2	H3	H4	H5	H6	H7	H8	H9	H10	H11	H12	H13	H14	H15	H16	H17	H18	H19
125A5	93'-8 3/4"	1'-10 5/16"	7/16"	1 5/8"	2 11/16"	3 9/16"	4 5/16"	4 15/16"	5 3/8"	5 3/4"	5 15/16"	6"	5 15/16"	5 3/4"	5 3/8"	4 15/16"	4 5/16"	3 9/16"	2 11/16"	1 5/8"	7/16"
126B5	92'-1 9/16"	1'-0 3/4"	1/4"	1 7/16"	2 1/2"	3 3/8"	4 1/8"	4 3/4"	5 1/4"	5 9/16"	5 3/4"	5 7/8"	5 3/4"	5 9/16"	5 1/4"	4 3/4"	4 1/8"	3 3/8"	2 1/2"	1 7/16"	1/4"
127C5	90'-8 1/2"	4 3/16"	1/16"	1 1/4"	2 5/16"	3 3/16"	3 15/16"	4 9/16"	5 1/16"	5 7/16"	5 5/8"	5 11/16"	5 5/8"	5 7/16"	5 1/16"	4 9/16"	3 15/16"	3 3/16"	2 5/16"	1 1/4"	1/16"

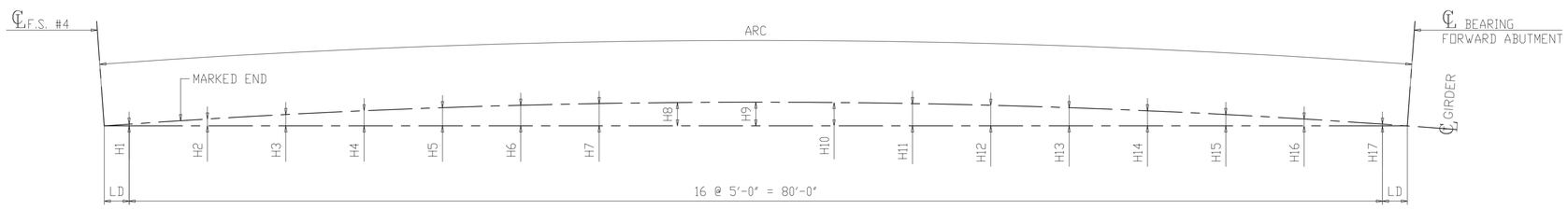

HORIZONTAL CURVE DIAGRAM FOR 128D5, 129E5 & 130F5

(DIMENSIONS ARE ALONG BOTTOM OF WEB)

MARK	ARC	LD	H1	H2	H3	H4	H5	H6	H7	H8	H9	H10	H11	H12	H13	H14	H15	H16	H17
128D5	87'-5 11/16"	3'-8 13/16"	7/8"	1 15/16"	2 13/16"	3 9/16"	4 3/16"	4 11/16"	5 1/16"	5 1/4"	5 5/16"	5 1/4"	5 1/16"	4 11/16"	4 3/16"	3 9/16"	2 13/16"	1 15/16"	7/8"
129E5	86'-9 11/16"	3'-4 13/16"	13/16"	1 13/16"	2 3/4"	3 1/2"	4 1/8"	4 5/8"	5"	5 3/16"	5 1/4"	5 3/16"	5"	4 5/8"	4 1/8"	3 1/2"	2 3/4"	1 13/16"	13/16"
130F5	87'-5 11/16"	3'-8 13/16"	7/8"	1 15/16"	2 7/8"	3 5/8"	4 1/4"	4 3/4"	5 1/8"	5 5/16"	5 3/8"	5 5/16"	5 1/8"	4 3/4"	4 1/4"	3 5/8"	2 7/8"	1 15/16"	7/8"

NO.	DATE	REMARKS	BY

REVISIONS

Veritas STEEL

2-EAU CLAIRE, WI 3-WAUSAU, WI 4-PALATKA, FL

TENCA 1605

STRUCTURE: CUY-010-1978R, OH-10 EASTBOUND OVER GCRTA BLUE AND GREEN LINES

LOCATION: CLEVELAND, OHIO CUYAHOGA COUNTY

PROJECT NO.: 17-3000

ENGINEER: MICHAEL BAKER INTERNATIONAL

CONTRACTOR: KOKOSING

ITEM: HORIZONTAL CURVING DIAGRAMS

SURFACE PREP.: SEE P101 OPEN HOLES: 1 1/16"ø (U.N.O.)

PAINT: SEE P101

APPROVAL	DRAWN AM 05/22/19	SHEET NO.	PLANT	ORDER NO.
SHOP	CHECKED DP 05/31/19	HC105	3	317023A

CLEANING & PAINTING NOTES

CLEANING:

1. ALL STEEL SHALL BE BLAST CLEANED TO "NEAR WHITE CONDITION" AS PER SSPC-SP10 PRIOR TO PAINTING. BLAST PROFILE SHALL BE 1.5-3.5 MILS.

2. SOLVENT CLEAN PER SSPC-SP1 AND RADIUS EDGES TO $\frac{1}{8}'' \pm \frac{1}{16}''$ PRIOR TO BLASTING. INSPECT BLAST PROFILE PER ASTM D4417, METHOD C.

3. BEFORE THE NEW STEEL IS SHIPPED, SOLVENT CLEAN, WHERE NECESSARY, ALL SURFACES OF ASTM A709 GRADE 50W STEEL THAT ARE TO BE LEFT UNPAINTED TO REMOVE ALL TRACES OF ASPHALT CEMENT, OIL, GREASE, DIESEL FUEL DEPOSITS, CHALK, PAINT MARKS, AND OTHER SOLUBLE CONTAMINANTS ACCORDING TO SSPC-SP1 SOLVENT CLEANING. △1

   SHOP BLAST UNPAINTED GRADE 50W MATERIAL TO SSPC-SP6, COMMERCIAL BLAST.

PAINTING:

1. STEEL GIRDERS AND CROSS FRAMES WITHIN THE LAST 10 FEET OF THE SUPERSTRUCTURE SHALL BE PAINTED WITH A THREE-COAT INORGANIC ZINC PRIMER SHERWIN WILLIAMS PAINT SYSTEM IN ACCORDANCE WITH C&MS 514. 1ST COAT SHALL BE SHOP APPLIED. THE REMAINING COATS SHALL BE FIELD APPLIED. SEE SKETCH 1.
   - 1ST COAT & DFT: ZINC CLAD II PLUS, 3-5 MILS (MIN. SPOT THICKNESS 2.4 MILS, MAX SPOT THICKNESS 6 MILS).
   - 2ND COAT & DFT: FIELD APPLIED.
   - 3RD COAT & DFT: FIELD APPLIED.

2. THE COLOR SHALL BE BROWN PER FEDERAL STANDARD NO. 595B-20045 OR 20059 (THE COLOR OF WEATHERING STEEL).

3. APPLY A MIST COAT FROM 0.5 TO 1.5 MILS ON SURFACES OF TOP FLANGES EMBEDDED IN CONCRETE, SEE SECTION A-A.

4. APPLY A MIST COAT FROM 0.5 TO 1.5 MILS ON SURFACES WITHIN 2" OF FIELD WELDS (BEARING AREA FOR FIELD-APPLIED BEARINGS).

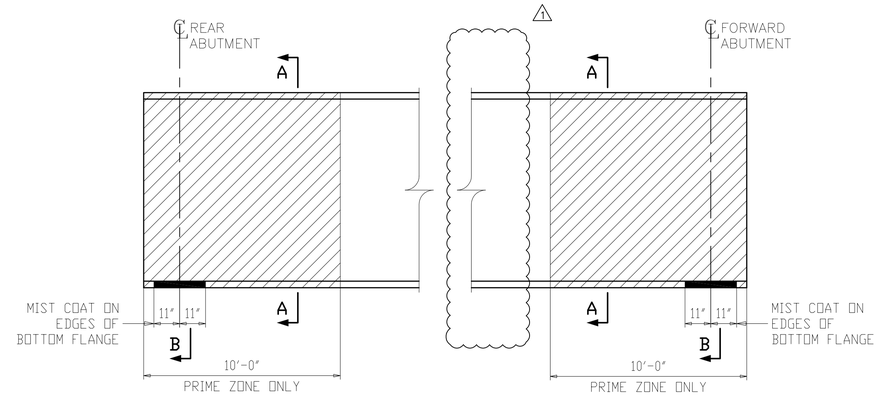

SKETCH 1
ALL GIRDER LINES

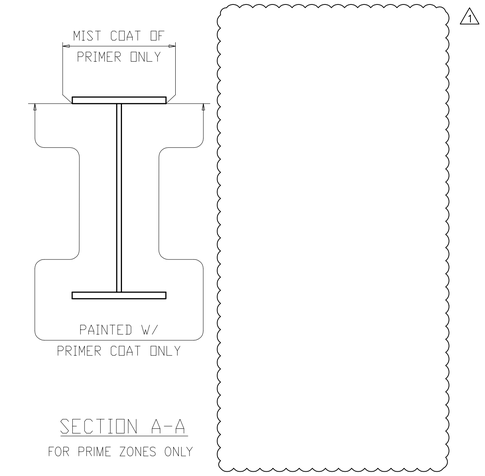

SECTION A-A
FOR PRIME ZONES ONLY

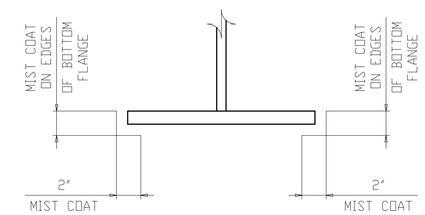

SECTION B
MASKING ZONE ON BEARING AREA ONLY

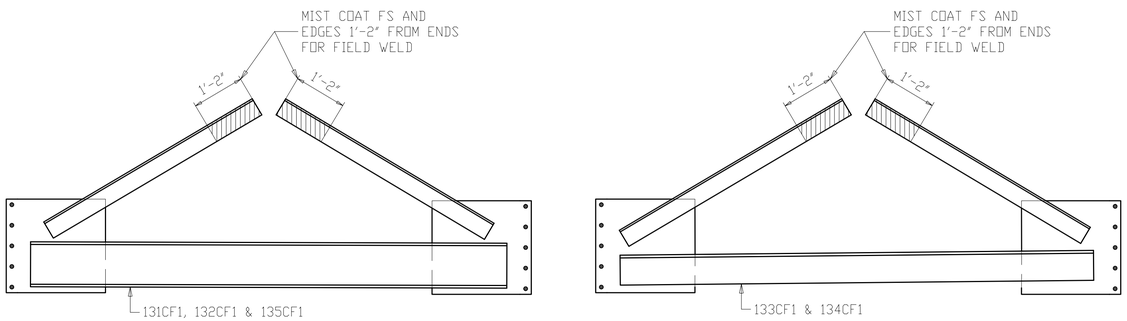

MASKING AT REAR ABUTMENT DIAPHRAGMS

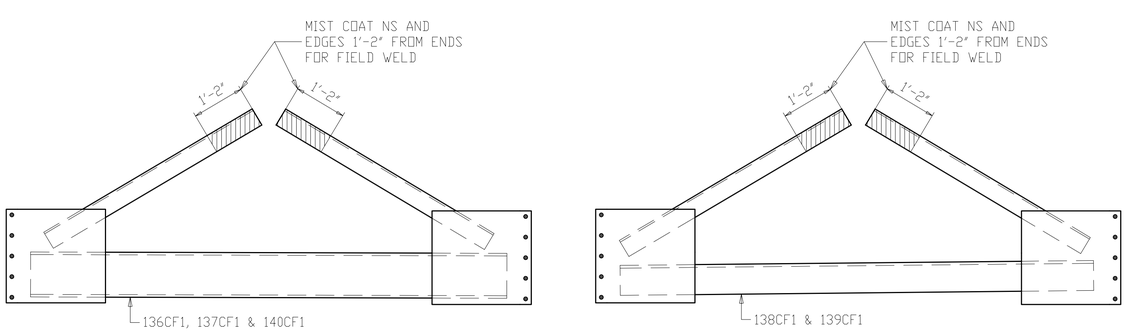

MASKING AT FORWARD ABUTMENT DIAPHRAGMS

△1

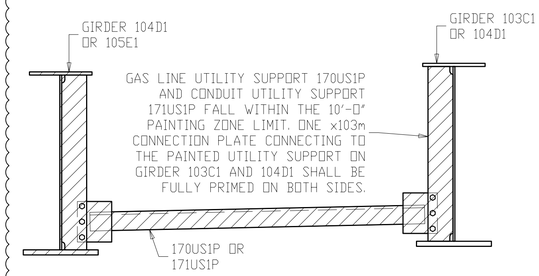

PRIMED ZONE FOR 170US1P AND 171US1P
AT REAR ABUTMENT
LOOKING WEST

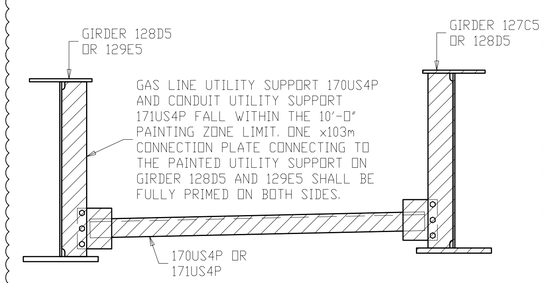

PRIMED ZONE FOR 170US4P AND 171US4P
AT FORWARD ABUTMENT
LOOKING WEST

NOTE TO ENGINEER:
THESE NOTES ARE NOT INTENDED TO BE ALL INCLUSIVE AND COMPLIANCE WITH RELEVANT SPECIFICATIONS REMAIN UNCHANGED.

NO.	DATE	REMARKS	BY
△1	11/01/19	AS PER APPROVAL COMMENTS	DP

REVISIONS

Veritas STEEL
2-EAU CLAIRE, WI 3-WAUSAU, WI 4-PALATKA, FL
TENCA 1605

STRUCTURE	CUY-010-1978R, OH-10 EASTBOUND OVER GCRTA BLUE AND GREEN LINES
LOCATION	CLEVELAND, OHIO CUYAHOGA COUNTY
PROJECT NO.	17-3000
ENGINEER	MICHAEL BAKER INTERNATIONAL
CONTRACTOR	KOKOSING
ITEM	PAINT NOTES
SURFACE PREP.	SEE P101 OPEN HOLES $1\frac{1}{16}''\varnothing$ (U.N.O.)
PAINT	SEE P101

APPROVAL	DRAWN AM 05/23/19	SHEET NO.	PLANT	ORDER NO.
SHOP	CHECKED DP 06/21/19	P101	3	317023A

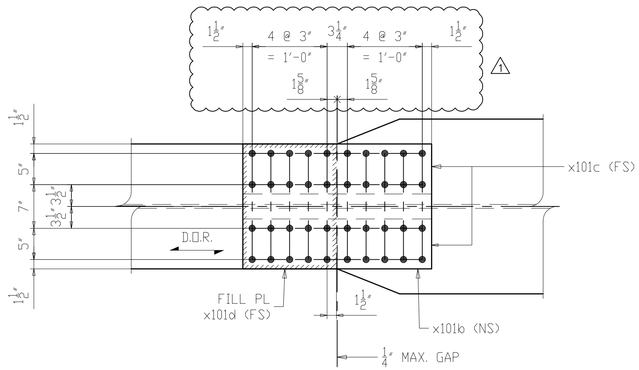

℄ FIELD SPLICE #1

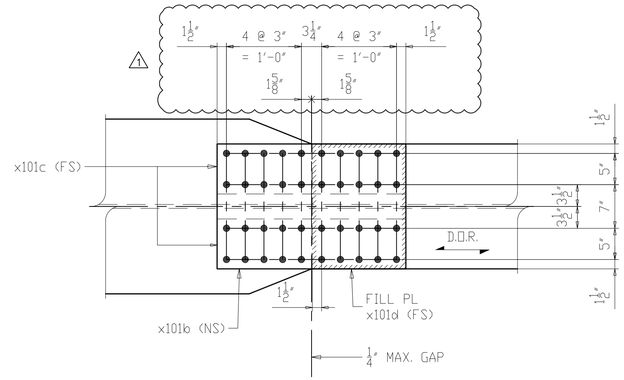

℄ FIELD SPLICE #2

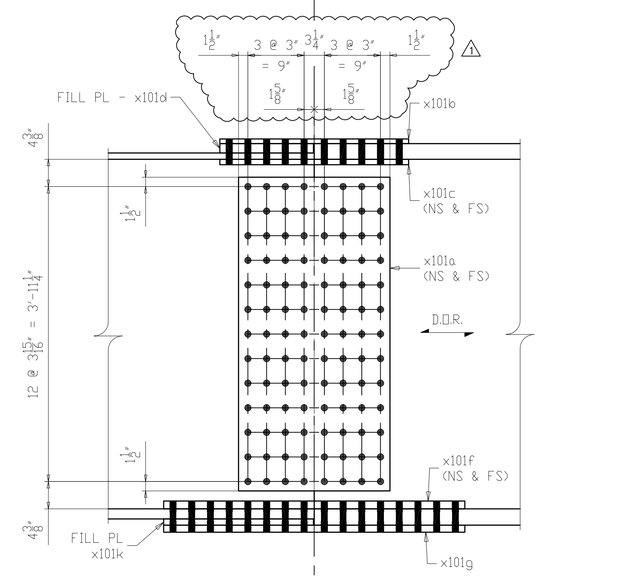

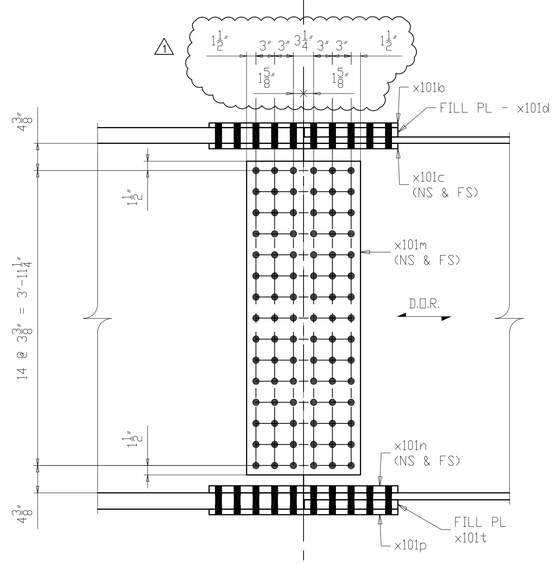

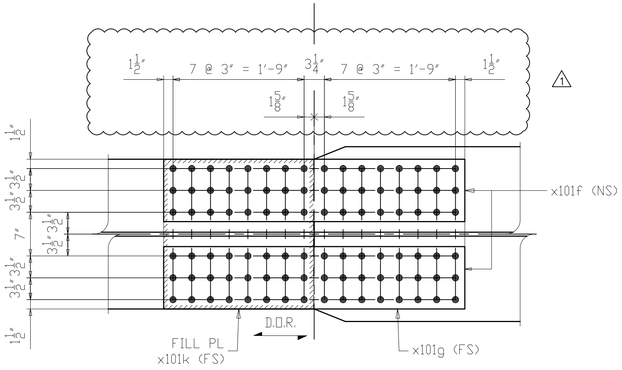

6 ~ FIELD SPLICE ~ X101M1
(DETAIL AT FS #1)
(LINE A THRU F)

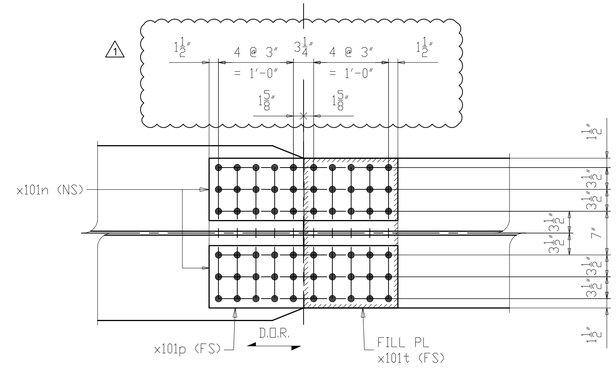

6 ~ FIELD SPLICE ~ X101M2
(DETAIL AT FS #2)
(LINE A THRU F)

LINE	SHIP MARK	NO. OF PCS.	ASS'Y MARK	MATERIAL SHAPE	LENGTH FT.	LENGTH IN.	MATERIAL SPEC.	ITEM	REMARKS	
1	X101M1	6		FIELD SPLICE ASS'Y						9314
2		12	x101a	PL 7/16 x 50 1/4	2	0 1/4	A709-50WT2	1098	CVN	1813
3		6	x101b	PL 3/4 x 20	2	6 1/4	A709-50WT2	1096	CVN	771
4		12	x101c	PL 7/8 x 8	2	6 1/4	A709-50WT2	1097	CVN	720
5		6	x101d	PL 1 1/2 x 15	1	8	A709-50WT2	1101	CVN	765
6		12	x101f	PL 1 1/4 x 10	4	0 1/4	A709-50WT2	1099	CVN	2051
7		6	x101g	PL 1 1/8 x 24	4	0 1/4	A709-50WT2	1100	CVN	2215
8		6	x101k	PL 1 x 24	2	0	A709-50WT2	1102	CVN	979
9										
10	X101M2	6		FIELD SPLICE ASS'Y						6580
11		6	x101b	PL 3/4 x 20	2	6 1/4	A709-50WT2	1103	CVN	771
12		12	x101c	PL 7/8 x 8	2	6 1/4	A709-50WT2	1104	CVN	720
13		6	x101d	PL 1 1/2 x 15	1	8	A709-50WT2	1108	CVN	765
14		12	x101m	PL 3/8 x 50 1/4	1	6 1/4	A709-50WT2	1105	CVN	1169
15		12	x101n	PL 1 1/8 x 10	2	6 1/4	A709-50WT2	1106	CVN	1157
16		6	x101p	PL 7/8 x 24	2	6 1/4	A709-50WT2	1107	CVN	1080
17		6	x101t	PL 1 1/2 x 15	2	0	A709-50WT2	1109	CVN	918
18										

NOTES:
1. FOR GENERAL NOTES SEE SHEET GN101.
2. ALL MATERIAL A709-50WT2 (UN)
3. T2 - DENOTES MATERIAL SUBJECT TO CHARPY V-NOTCH TEST
- CVN = 15 FT-LBS @ 40°F "H" FREQ FOR THICKNESS UP 2".
- CVN = 20 FT-LBS @ 40°F "H" FREQ FOR THICKNESS OVER 2".
4. D.O.R. DENOTES DIRECTION OF MILL ROLLING

NO.	DATE	REMARKS	BY
1	11/01/19	AS PER APPROVAL COMMENTS	DP

REVISIONS

Veritas STEEL
2-EAU CLAIRE, WI 3-WAUSAU, WI 4-PALATKA, FL
IENCA 1605

STRUCTURE: CUY-010-1978R, OH-10 EASTBOUND OVER GCRTA BLUE AND GREEN LINES
LOCATION: CLEVELAND, OHIO CUYAHOGA COUNTY
PROJECT NO. 17-3000
ENGINEER: MICHAEL BAKER INTERNATIONAL
CONTRACTOR: KOKOSING

ITEM: FIELD SPLICE DETAILS
SURFACE PREP. SEE P101 OPEN HOLES 1 1/16"Ø (U.N.O.)
PAINT SEE P101

APPROVAL	DRAWN AM 05/10/19	SHEET NO.	PLANT	ORDER NO.
SHOP	CHECKED DP 06/10/19	X101	3	317023A-31

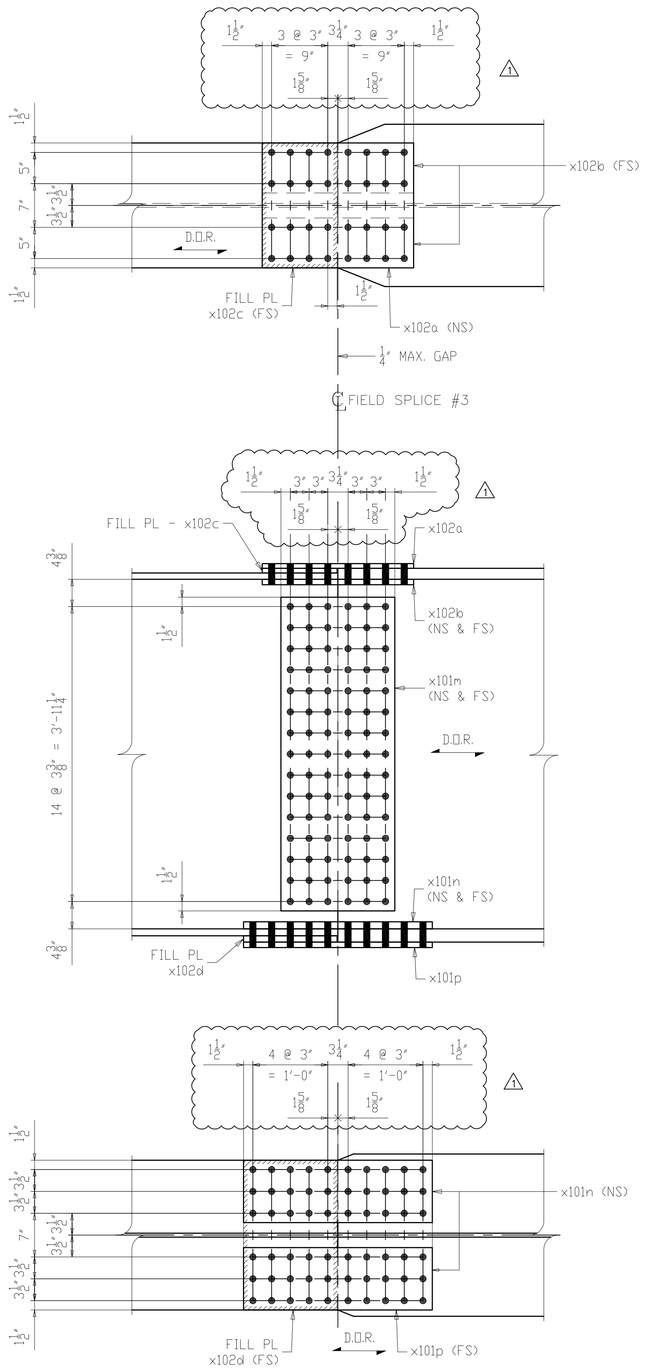

6 ~ FIELD SPLICE ~ X102M1
(DETAIL AT FS #3)
(LINE A THRU F)

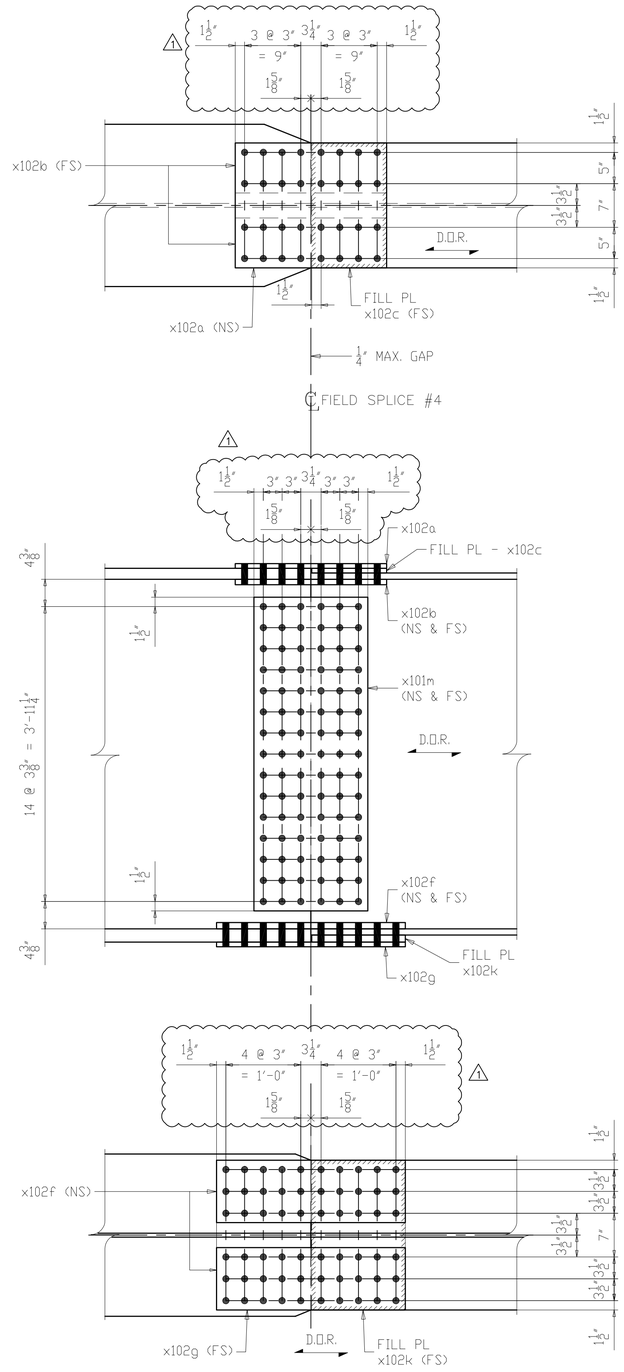

6 ~ FIELD SPLICE ~ X102M2
(DETAIL AT FS #4)
(LINE A THRU F)

LINE	SHIP MARK	NO. OF PCS.	ASS'Y MARK	MATERIAL SHAPE	LENGTH FT.	LENGTH IN.	MATERIAL SPEC.	ITEM NO.	REMARKS
1	X102M1	6		FIELD SPLICE ASS'Y					5519
2		12	x101m	PL 3/8 x 50 1/4	1	6 1/4	A709-50WT2	1112	CVN 1169
3		12	x101n	PL 1 1/8 x 10	2	6 1/4	A709-50WT2	1113	CVN 1157
4		6	x101p	PL 7/8 x 24	2	6 1/4	A709-50WT2	1114	CVN 1080
5		6	x102a	PL 3/4 x 20	2	0 1/4	A709-50WT2	1110	CVN 618
6		12	x102b	PL 7/8 x 8	2	0 1/4	A709-50WT2	1111	CVN 577
7		6	x102c	PL 3/4 x 12	1	8	A709-50WT2	1115	CVN 306
8		6	x102d	PL 1 x 15	2	0	A709-50WT2	1116	CVN 612
9									
10	X102M2	6		FIELD SPLICE ASS'Y					5314
11		12	x101m	PL 3/8 x 50 1/4	1	6 1/4	A709-50WT2	1119	CVN 1169
12		6	x102a	PL 3/4 x 20	2	0 1/4	A709-50WT2	1117	CVN 618
13		12	x102b	PL 7/8 x 8	2	0 1/4	A709-50WT2	1118	CVN 577
14		6	x102c	PL 3/4 x 12	1	8	A709-50WT2	1122	CVN 306
15		12	x102f	PL 1 x 10	2	6 1/4	A709-50WT2	1120	CVN 1029
16		6	x102g	PL 3/4 x 24	2	6 1/4	A709-50WT2	1121	CVN 926
17		6	x102k	PL 1 1/8 x 15	2	0	A709-50WT2	1123	CVN 689
18									

NOTES:
1. FOR GENERAL NOTES SEE SHEET GN101.
2. ALL MATERIAL A709-50WT2 (UN)
3. T2 - DENOTES MATERIAL SUBJECT TO CHARPY V-NOTCH TEST
- CVN = 15 FT-LBS @ 40°F "H" FREQ FOR THICKNESS UP 2".
- CVN = 20 FT-LBS @ 40°F "H" FREQ FOR THICKNESS OVER 2".
4. D.O.R. DENOTES DIRECTION OF MILL ROLLING

NO.	DATE	REMARKS	BY
1	11/01/19	AS PER APPROVAL COMMENTS	DP

REVISIONS

Veritas STEEL
2-EAU CLAIRE, WI 3-WAUSAU, WI 4-PALATKA, FL
IAS 1605

STRUCTURE: CUY-010-1978R, OH-10 EASTBOUND OVER GCRTA BLUE AND GREEN LINES
LOCATION: CLEVELAND, OHIO CUYAHOGA COUNTY
PROJECT NO. 17-3000
ENGINEER: MICHAEL BAKER INTERNATIONAL
CONTRACTOR: KOKOSING

ITEM: FIELD SPLICE DETAILS
SURFACE PREP. SEE P101 OPEN HOLES 1 1/16"Ø (U.N.O.)
PAINT SEE P101

APPROVAL	DRAWN AM 05/10/19	SHEET NO.	PLANT	ORDER NO.
SHOP	CHECKED DP 06/10/19	X102	3	317023A-31

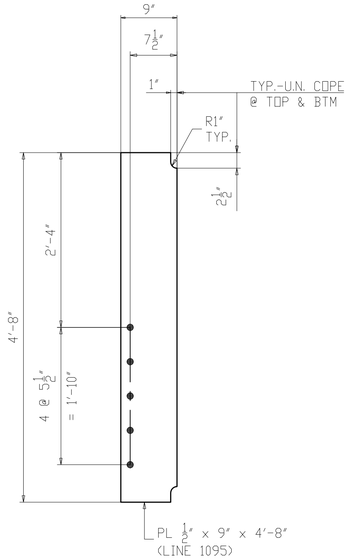

10 ~ ABUT. K-FRAME CONN. PL. ~ x103a
(@ REAR & FORWARD ABUTMENT)

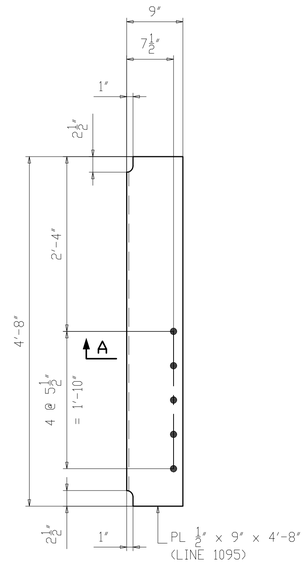

5 ~ ABUT. K-FRAME CONN. PL. ~ x103b
(@ REAR ABUTMENT)

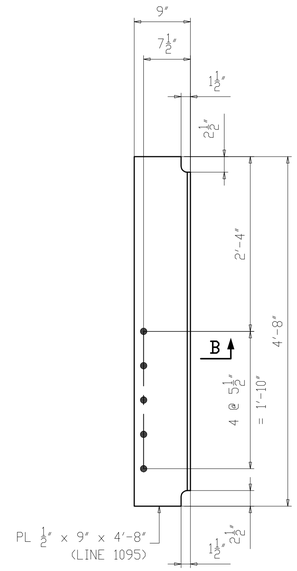

5 ~ ABUT. K-FRAME CONN. PL. ~ x103c
(@ FORWARD ABUTMENT)

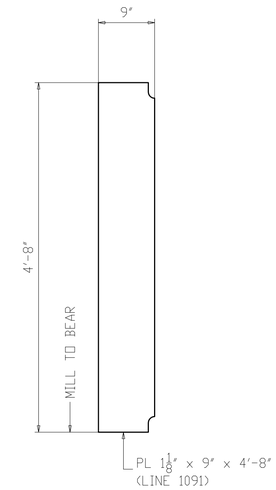

28 ~ BRG. STIFF. ~ x103d
(@ REAR & FORWARD ABUTMENT)
(@ PIER 1 & 2)

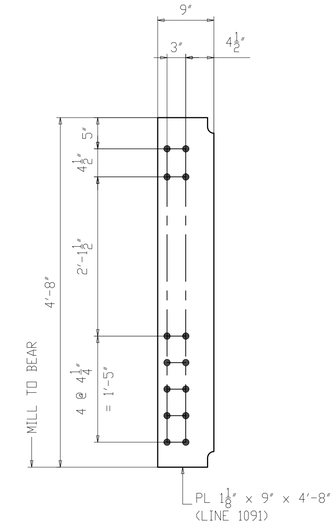

20 ~ BRG. STIFF. ~ x103f
(@ PIER 1 & 2)

SECTION A

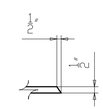

SECTION B

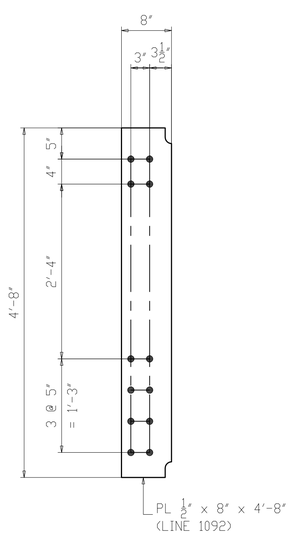

140 ~ INT. K-FRAME CONN. PL. ~ x103g
(@ SPAN 1, 2 & 3)

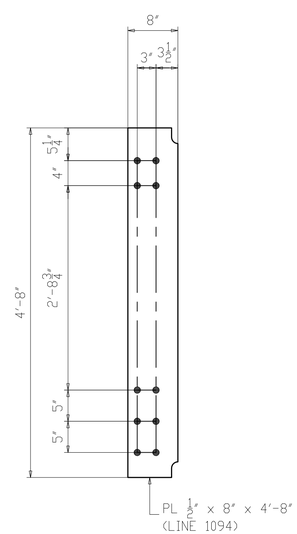

20 ~ LEAN ON BRACING CONN. PL. ~ x103k
(@ SPAN 1, 2 & 3)

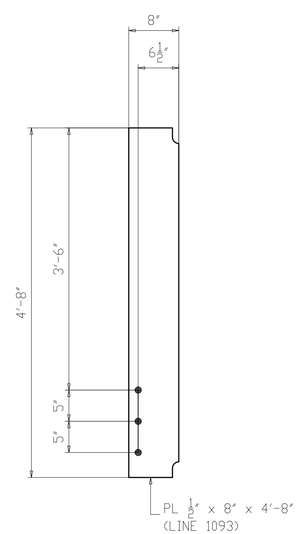

92 ~ UTILITY SUPPORT CONN. PL. ~ x103m
(@ SPAN 1, 2 & 3)

NOTES:
1. FOR GENERAL NOTES SEE SHEET GN101.
2. ALL MATERIAL A709-50WT2 (UN)

NO.	DATE	REMARKS	BY

REVISIONS

Veritas STEEL
2-EAU CLAIRE, WI 3-WAUSAU, WI 4-PALATKA, FL
TENCA 1605

STRUCTURE	CUY-010-1978R, OH-10 EASTBOUND OVER GCRTA BLUE AND GREEN LINES
LOCATION	CLEVELAND, OHIO CUYAHOGA COUNTY
PROJECT NO.	17-3000
ENGINEER	MICHAEL BAKER INTERNATIONAL
CONTRACTOR	KOKOSING
ITEM	GIRDER DETAILS
SURFACE PREP.	SEE P101 OPEN HOLES 1 1/16"ø (U.N.O.)
PAINT	SEE P101

APPROVAL	DRAWN AM 05/17/19	SHEET NO.	PLANT	ORDER NO.
SHOP	CHECKED DP 06/20/19	X103	3	317023A-20

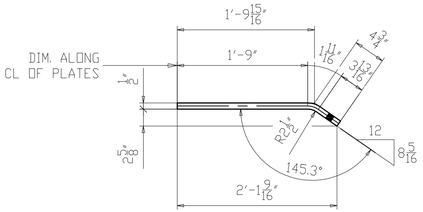

BENT DETAIL x104b

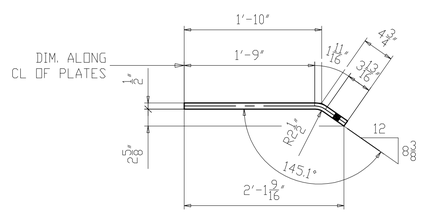

BENT DETAIL x104c

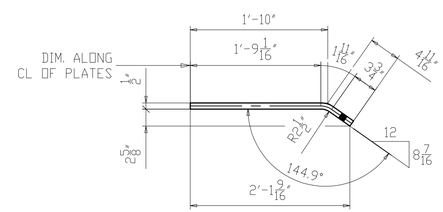

BENT DETAIL x104d

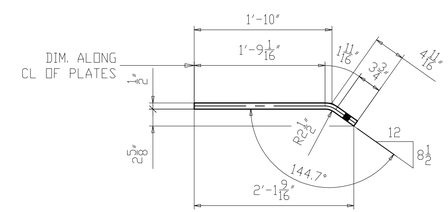

BENT DETAIL x104f

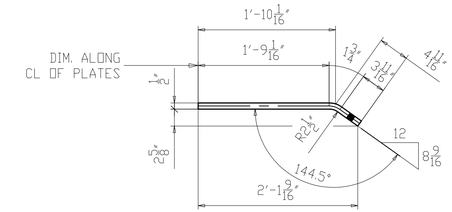

BENT DETAIL x104g

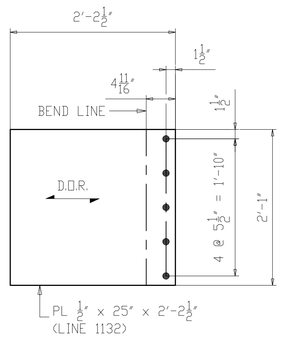

ONE ~ BOTTOM GUSSET ~ x104b
(REAR ABUTMENT)

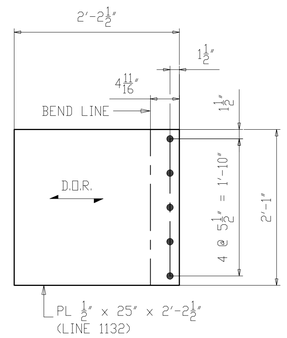

ONE ~ BOTTOM GUSSET ~ x104c
(REAR ABUTMENT)

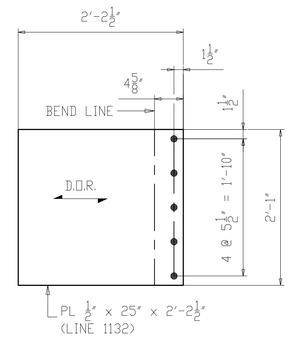

ONE ~ BOTTOM GUSSET ~ x104d
(REAR ABUTMENT)

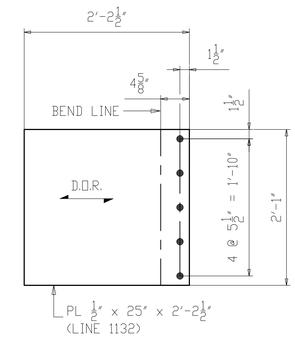

ONE ~ BOTTOM GUSSET ~ x104f
(REAR ABUTMENT)

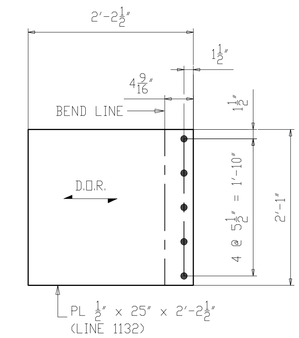

ONE ~ BOTTOM GUSSET ~ x104g
(REAR ABUTMENT)

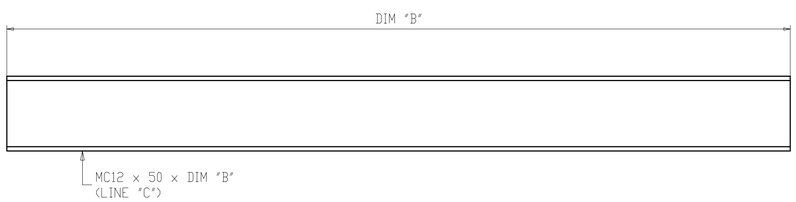

QTY "D" ~ BOTTOM STRUT ~ MARK "A"
(REAR & FORWARD ABUTMENT)

MARK "A"	DIM "B"	LINE "C"	QTY "D"
x104k	10'-5 3/4"	1124	1
x104m	10'-6 1/16"	1124	1
x104n	10'-7 3/16"	1124	1
x104p	12'-7 3/8"	1125	1
x104t	12'-8 1/4"	1125	1
x104v	12'-11 3/16"	1125	1

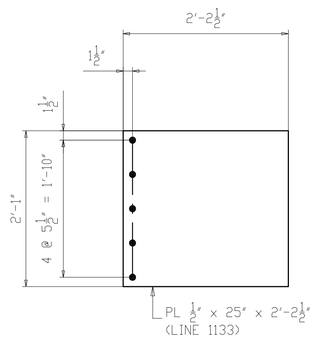

10 ~ BOTTOM GUSSET ~ x104a
(REAR & FORWARD ABUTMENT)

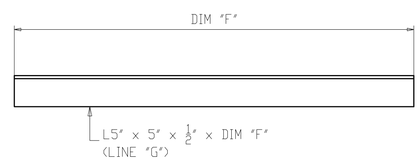

QTY "H" ~ DIAGONAL ~ MARK "E"
(REAR & FORWARD ABUTMENT)

MARK "E"	DIM "F"	LINE "G"	QTY "H"
x104w	5'-4 1/8"	1128	1
x104y	5'-4 9/16"	1128	1
x104aa	5'-4 11/16"	1128	2
x104ab	5'-8 1/8"	1129	1
x104ac	5'-8 7/8"	1129	1
x104ad	5'-8 1/2"	1129	1
x104af	5'-11 7/16"	1130	1
x104ag	6'-1"	1130	2
x104ak	5'-11 11/16"	1130	1
x104am	6'-1 1/4"	1130	1
x104an	6'-7 1/2"	1131	1
x104ap	6'-9 1/16"	1131	1
x104at	6'-8 3/16"	1131	1
x104av	6'-9 1/4"	1131	1
x104aw	6'-1 11/16"	1130	1
x104ay	5'-4 3/16"	1128	1
x104ba	5'-4 13/16"	1128	1
x104bb	5'-8 3/4"	1129	1

NOTES:
1. FOR GENERAL NOTES SEE SHEET GN101.
2. ALL MATERIAL A709-50WT2 (UN).
3. T2 - DENOTES MATERIAL SUBJECT TO CHARPY V-NOTCH TESTING.
4. D.O.R. DENOTES DIRECTION OF MILL ROLLING.

NO.	DATE	REMARKS	BY

REVISIONS

Veritas STEEL
2-EAU CLAIRE, WI 3-WAUSAU, WI 4-PALATKA, FL
IENCA 1605

STRUCTURE	CUY-010-1978R, OH-10 EASTBOUND OVER GCRTA BLUE AND GREEN LINES
LOCATION	CLEVELAND, OHIO CUYAHOGA COUNTY
PROJECT NO.	17-3000
ENGINEER	MICHAEL BAKER INTERNATIONAL
CONTRACTOR	KOKOSING
ITEM	ABUTMENT K-FRAME DETAILS
SURFACE PREP.	SEE P101 OPEN HOLES 1 1/16"Ø (U.N.O.)
PAINT	SEE P101

APPROVAL	DRAWN AM 05/22/19	SHEET NO.	PLANT	ORDER NO.
SHOP	CHECKED DP 06/21/19	X104	3	317023A-37

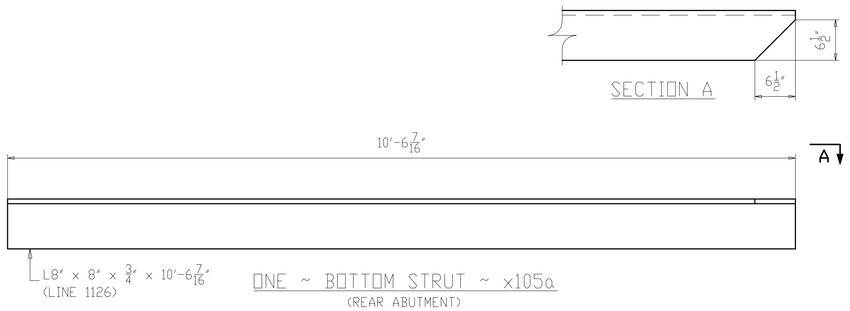

ONE ~ BOTTOM STRUT ~ x105a
(REAR ABUTMENT)

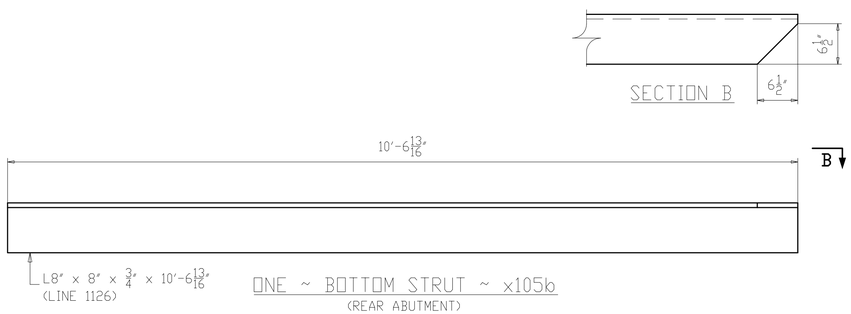

ONE ~ BOTTOM STRUT ~ x105b
(REAR ABUTMENT)

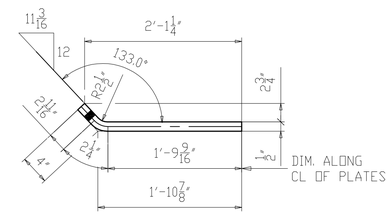

BENT DETAIL x105g

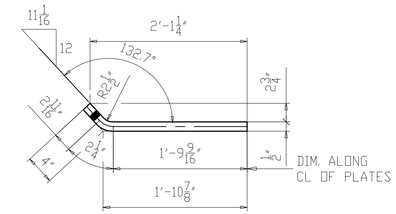

BENT DETAIL x105k

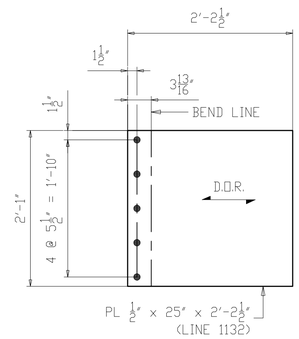

ONE ~ BOTTOM GUSSET ~ x105g
(FORWARD ABUTMENT)

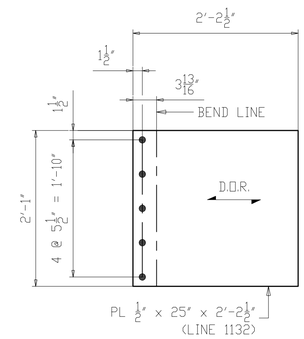

ONE ~ BOTTOM GUSSET ~ x105k
(FORWARD ABUTMENT)

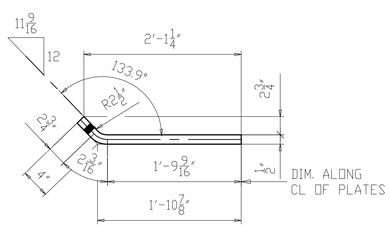

BENT DETAIL x105c

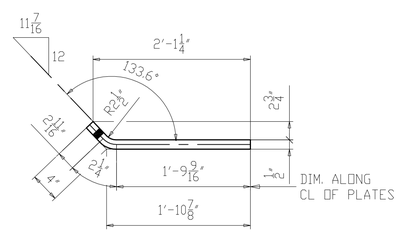

BENT DETAIL x105d

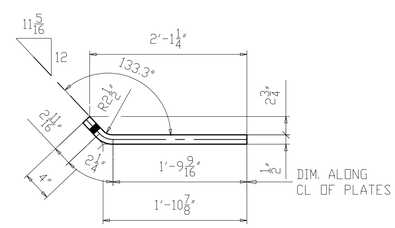

BENT DETAIL x105f

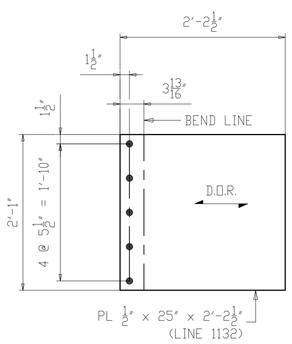

ONE ~ BOTTOM GUSSET ~ x105c
(FORWARD ABUTMENT)

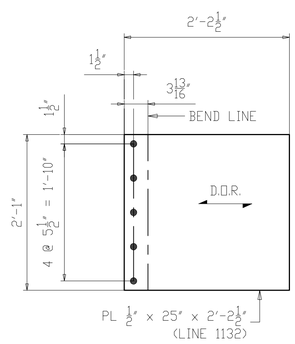

ONE ~ BOTTOM GUSSET ~ x105d
(FORWARD ABUTMENT)

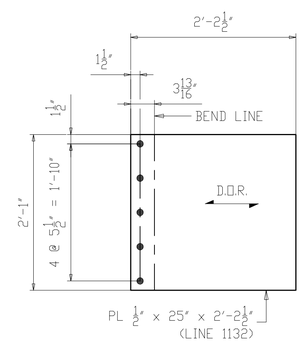

ONE ~ BOTTOM GUSSET ~ x105f
(FORWARD ABUTMENT)

NOTES:
1. FOR GENERAL NOTES SEE SHEET GN101.
2. ALL MATERIAL A709-50WT2 (UN).
3. T2 - DENOTES MATERIAL SUBJECT TO CHARPY V-NOTCH TESTING.
4. D.O.R. DENOTES DIRECTION OF MILL ROLLING.

NO.	DATE	REMARKS	BY

REVISIONS

Veritas STEEL
2-EAU CLAIRE, WI 3-WAUSAU, WI 4-PALATKA, FL
IENCA 1605

STRUCTURE	CUY-010-1978R, OH-10 EASTBOUND OVER GCRTA BLUE AND GREEN LINES
LOCATION	CLEVELAND, OHIO CUYAHOGA COUNTY
PROJECT NO.	17-3000
ENGINEER	MICHAEL BAKER INTERNATIONAL
CONTRACTOR	KOKOSING
ITEM	ABUTMENT K-FRAME DETAILS
SURFACE PREP.	SEE P101 OPEN HOLES 1 1/16"Ø (U.N.O.)
PAINT	SEE P101

APPROVAL	DRAWN AM 05/22/19	SHEET NO.	PLANT	ORDER NO.
SHOP	CHECKED DP 06/21/19	X105	3	317023A-37

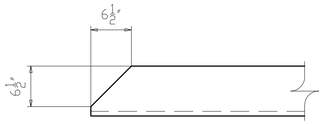

SECTION A

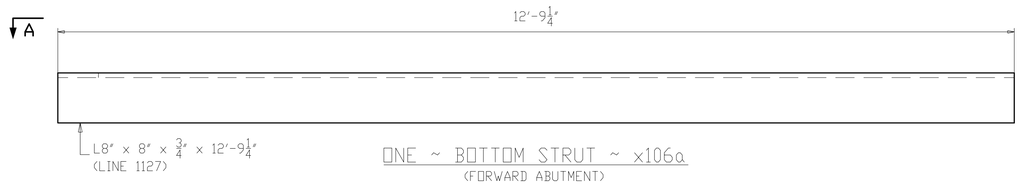

ONE ~ BOTTOM STRUT ~ x106a
(FORWARD ABUTMENT)

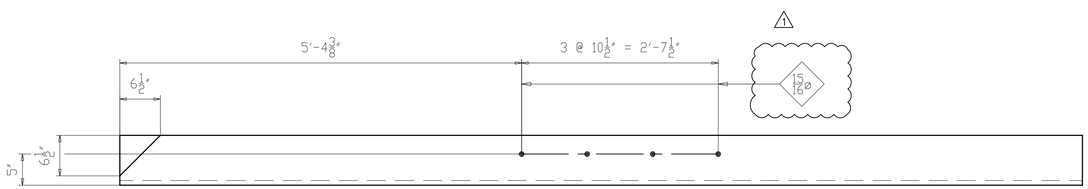

SECTION B-B

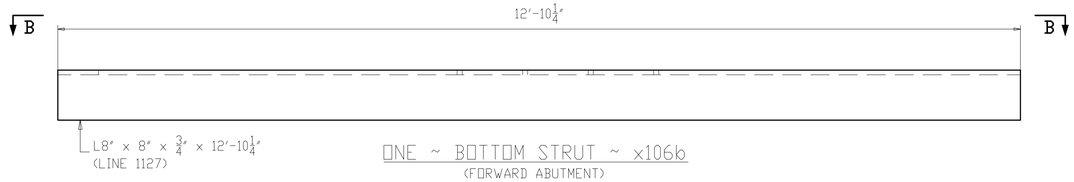

ONE ~ BOTTOM STRUT ~ x106b
(FORWARD ABUTMENT)

NOTES:
1. FOR GENERAL NOTES SEE SHEET GN101.
2. ALL MATERIAL A709-50WT2 (UN).
3. T2 - DENOTES MATERIAL SUBJECT TO CHARPY V-NOTCH TESTING.

NO.	DATE	REMARKS	BY
1	11/01/19	AS PER APPROVAL COMMENTS	DP

REVISIONS

Veritas STEEL
2-EAU CLAIRE, WI 3-WAUSAU, WI 4-PALATKA, FL
IENCA 1605

STRUCTURE: CUY-010-1978R, OH-10 EASTBOUND OVER GCRTA BLUE AND GREEN LINES
LOCATION: CLEVELAND, OHIO CUYAHOGA COUNTY
PROJECT NO.: 17-3000
ENGINEER: MICHAEL BAKER INTERNATIONAL
CONTRACTOR: KOKOSING

ITEM: ABUTMENT K-FRAME DETAILS
SURFACE PREP.: SEE P101
OPEN HOLES: 1 1/16"ø (U.N.O.)
PAINT: SEE P101

APPROVAL	DRAWN AM 05/22/19	SHEET NO.	PLANT	ORDER NO.
SHOP	CHECKED DP 06/21/19	X106	3	317023A-37

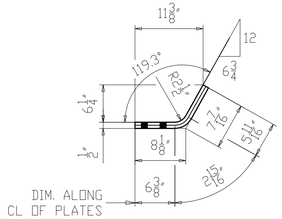

BENT DETAIL x107a

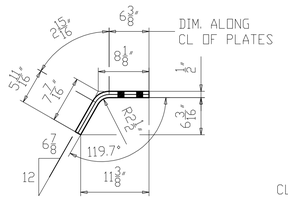

BENT DETAIL x107b

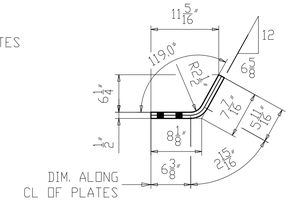

BENT DETAIL x107c

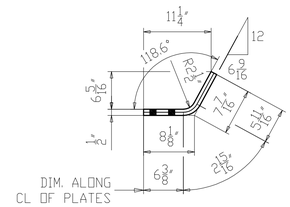

BENT DETAIL x107d

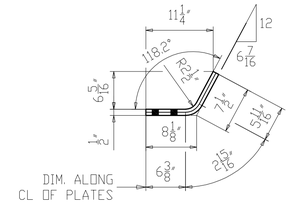

BENT DETAIL x107f

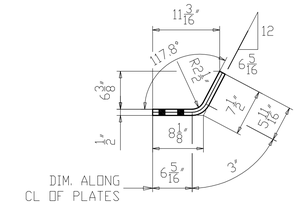

BENT DETAIL x107g

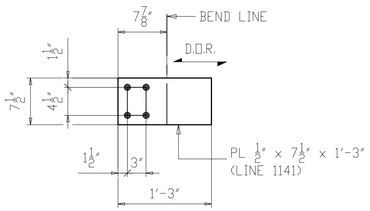

2 ~ TOP GUSSET ~ x107a
(PIER 1)

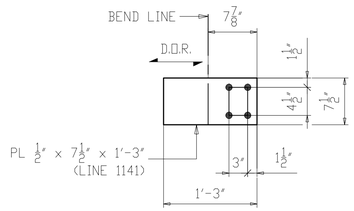

ONE ~ TOP GUSSET ~ x107b
(PIER 1)

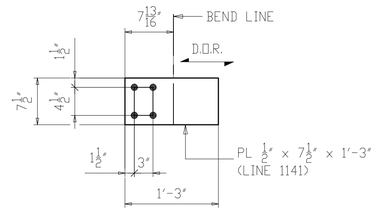

2 ~ TOP GUSSET ~ x107c
(PIER 1)

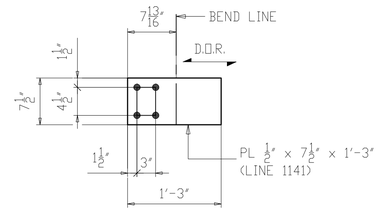

2 ~ TOP GUSSET ~ x107d
(PIER 1)

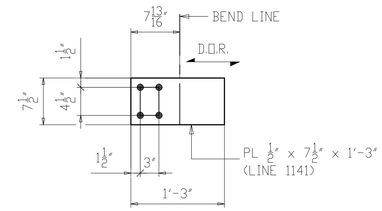

2 ~ TOP GUSSET ~ x107f
(PIER 1)

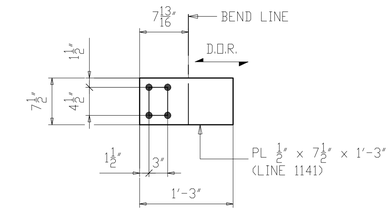

ONE ~ TOP GUSSET ~ x107g
(PIER 1)

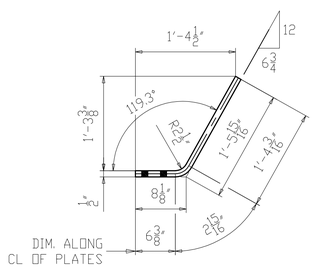

BENT DETAIL x107k

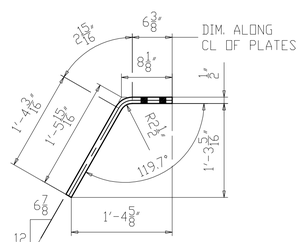

BENT DETAIL x107m

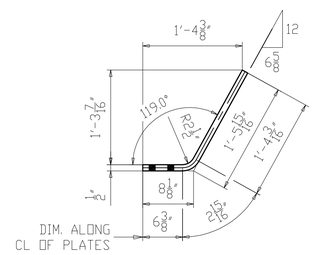

BENT DETAIL x107n

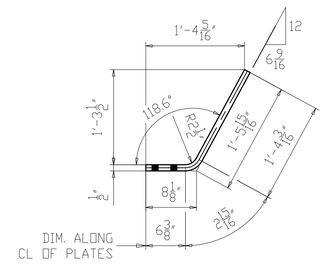

BENT DETAIL x107p

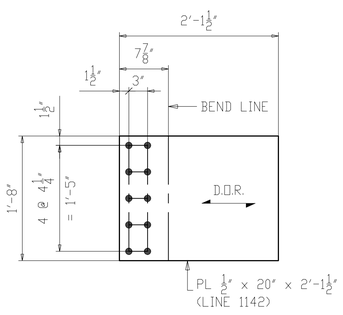

2 ~ BOTTOM GUSSET ~ x107k
(PIER 1)

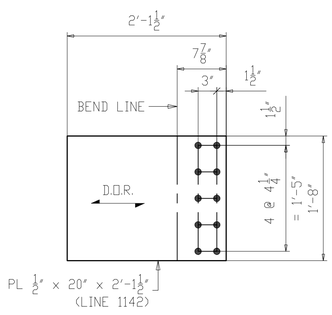

ONE ~ BOTTOM GUSSET ~ x107m
(PIER 1)

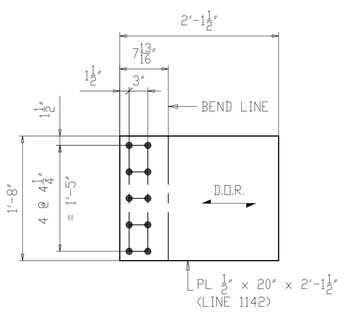

2 ~ BOTTOM GUSSET ~ x107n
(PIER 1)

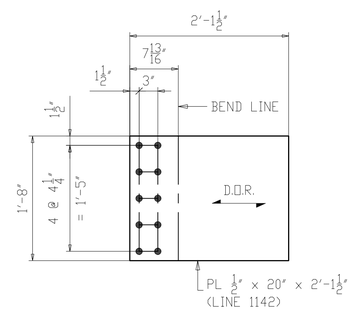

2 ~ BOTTOM GUSSET ~ x107p
(PIER 1)

NOTES:
1. FOR GENERAL NOTES SEE SHEET GN101.
2. ALL MATERIAL A709-50WT2 (UN).
3. T2 - DENOTES MATERIAL SUBJECT TO CHARPY V-NOTCH TESTING.
4. D.O.R. DENOTES DIRECTION OF MILL ROLLING.

NO.	DATE	REMARKS	BY

REVISIONS

Veritas STEEL
2-EAU CLAIRE, WI 3-WAUSAU, WI 4-PALATKA, FL
TENCA 1605

STRUCTURE	CUY-010-1978R, OH-10 EASTBOUND OVER GCRTA BLUE AND GREEN LINES
LOCATION	CLEVELAND, OHIO CUYAHOGA COUNTY
PROJECT NO.	17-3000
ENGINEER	MICHAEL BAKER INTERNATIONAL
CONTRACTOR	KOKOSING
ITEM	PIER K-FRAME DETAILS
SURFACE PREP.	SEE P101 OPEN HOLES 1 1/16"ø (U.N.O.)
PAINT	SEE P101

APPROVAL	DRAWN AM 05/22/19	SHEET NO.	PLANT	ORDER NO.
SHOP	CHECKED DP 07/10/19	X107	3	317023A-37

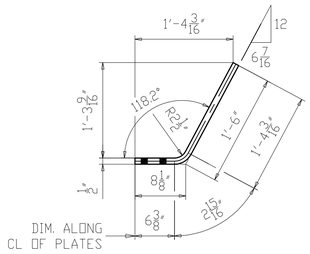

BENT DETAIL x108a

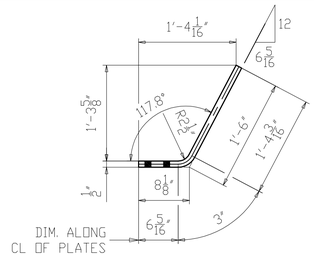

BENT DETAIL x108b

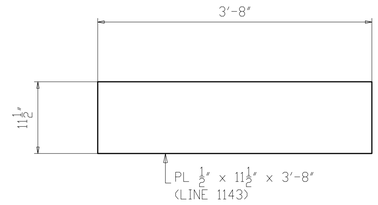

8 ~ CENTER GUSSET ~ x108c
(PIER 1 & 2)

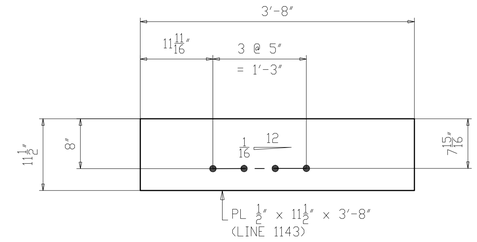

ONE ~ CENTER GUSSET ~ x108d
(PIER 1)

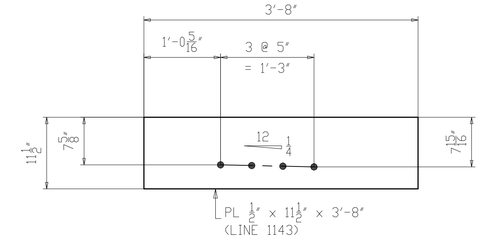

ONE ~ CENTER GUSSET ~ x108f
(PIER 2)

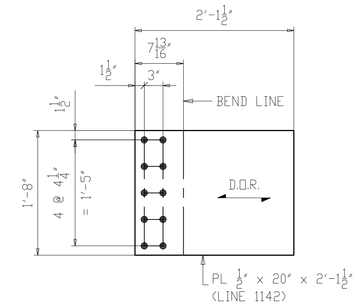

2 ~ BOTTOM GUSSET ~ x108a
(PIER 1)

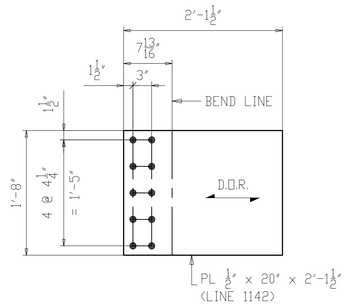

ONE ~ BOTTOM GUSSET ~ x108b
(PIER 1)

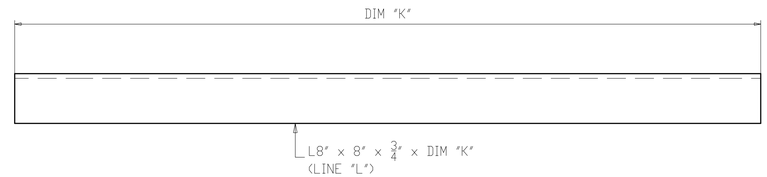

QTY "M" ~ BOTTOM STRUT ~ MARK "J"
(PIER 1 & 2)

MARK "J"	DIM "K"	LINE "L"	QTY "M"
x108bg	17'-0 1/8"	1136	1
x108bk	17'-2 1/2"	1136	1
x108bm	17'-5 1/16"	1136	1
x108bn	17'-10 7/16"	1136	1
x108bp	14'-2 13/16"	1135	1
x108bt	14'-4 1/16"	1135	1
x108bv	14'-5 3/8"	1135	1
x108bw	14'-8 1/4"	1135	1

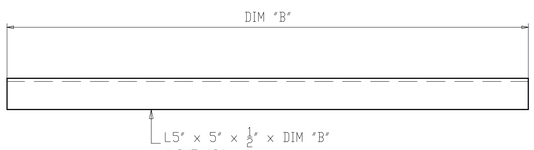

QTY "D" ~ DIAGONAL ~ MARK "A"
(PIER 1 & 2)

MARK "A"	DIM "B"	LINE "C"	QTY "D"
x108g	6'-11 11/16"	1140	1
x108k	6'-11 7/8"	1140	1
x108m	7'-0 7/16"	1140	1
x108n	7'-0 5/8"	1140	1
x108p	7'-1 1/4"	1140	1
x108t	7'-1 7/16"	1140	1
x108v	7'-2"	1140	1
x108w	7'-2 3/8"	1140	1
x108y	7'-2 13/16"	1140	1
x108aa	7'-3 1/4"	1140	1
x108ab	6'-1 13/16"	1139	1
x108ac	6'-0 15/16"	1139	1
x108ad	6'-2 1/4"	1139	1
x108af	6'-1 1/4"	1139	1
x108ag	6'-2 11/16"	1139	2
x108ak	6'-1 5/8"	1139	1
x108am	6'-3"	1139	1
x108an	6'-3 3/8"	1139	1
x108ay	6'-2 3/16"	1139	1

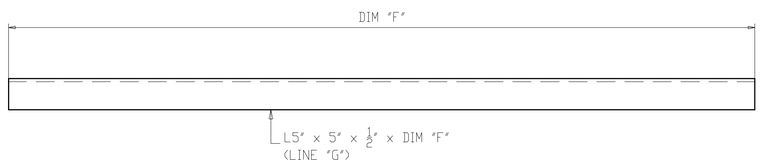

QTY "H" ~ TOP STRUT ~ MARK "E"
(PIER 1 & 2)

MARK "E"	DIM "F"	LINE "G"	QTY "H"
x108ap	17'-0 1/8"	1138	1
x108at	17'-2 9/16"	1138	1
x108av	17'-5 1/16"	1138	1
x108aw	17'-7 11/16"	1138	1
x108ay	17'-10 7/16"	1138	1
x108ba	14'-2 7/8"	1137	1
x108bb	14'-4 1/8"	1137	1
x108bc	14'-5 7/16"	1137	1
x108bd	14'-6 13/16"	1137	1
x108bf	14'-8 1/4"	1137	1

NOTES:
1. FOR GENERAL NOTES SEE SHEET GN101.
2. ALL MATERIAL A709-50WT2 (UN).
3. T2 - DENOTES MATERIAL SUBJECT TO CHARPY V-NOTCH TESTING.
4. D.O.R. DENOTES DIRECTION OF MILL ROLLING.

NO.	DATE	REMARKS	BY

REVISIONS

Veritas STEEL
2-EAU CLAIRE, WI 3-WAUSAU, WI 4-PALATKA, FL
TENCA 1605

STRUCTURE	CUY-010-1978R, OH-10 EASTBOUND OVER GCRTA BLUE AND GREEN LINES
LOCATION	CLEVELAND, OHIO CUYAHOGA COUNTY
PROJECT NO.	17-3000
ENGINEER	MICHAEL BAKER INTERNATIONAL
CONTRACTOR	KOKOSING
ITEM	PIER K-FRAME DETAILS
SURFACE PREP.	SEE P101 OPEN HOLES 1 1/16"Ø (U.N.O.)
PAINT	SEE P101

APPROVAL	DRAWN AM 05/22/19	SHEET NO.	PLANT	ORDER NO.
SHOP	CHECKED DP 07/10/19	X108	3	317023A-37

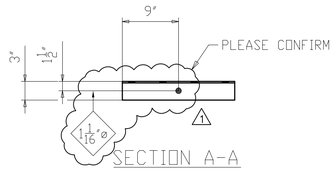

SECTION A-A

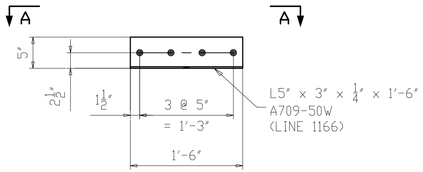

2 ~ GAS LINE SUPPORT ANGLE ~ x109a

(PIER 1 & 2)

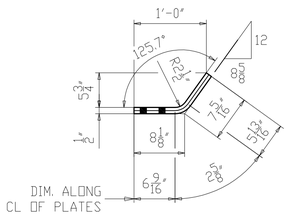

BENT DETAIL x109d

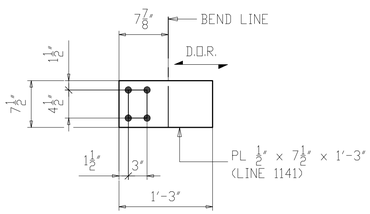

2 ~ TOP GUSSET ~ x109d

(PIER 2)

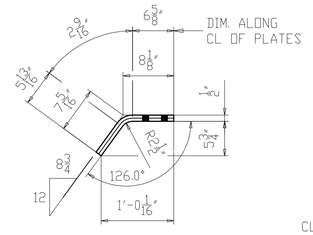

BENT DETAIL x109f

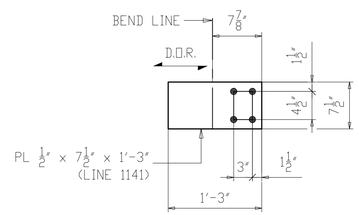

ONE ~ TOP GUSSET ~ x109f

(PIER 2)

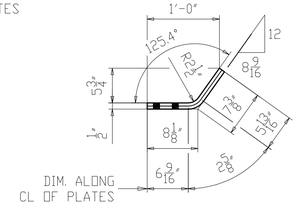

BENT DETAIL x109g

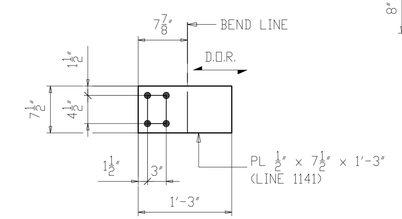

2 ~ TOP GUSSET ~ x109g

(PIER 2)

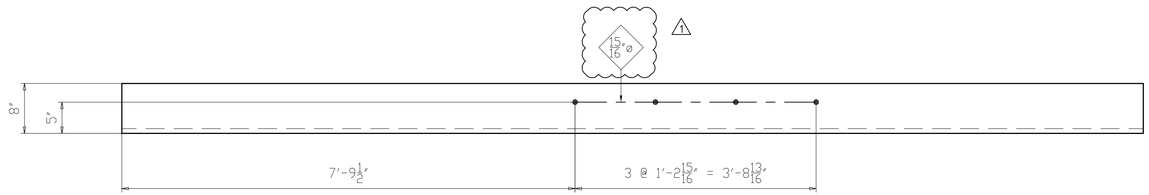

SECTION B-B

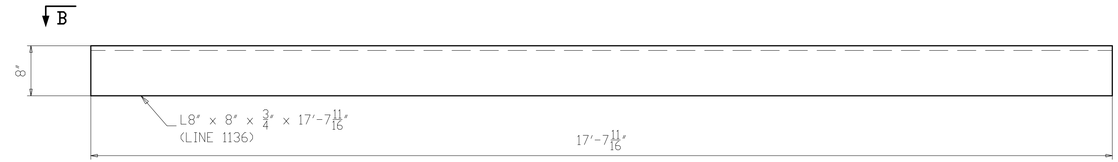

ONE ~ BOTTOM STRUT ~ x109b

(PIER 1)

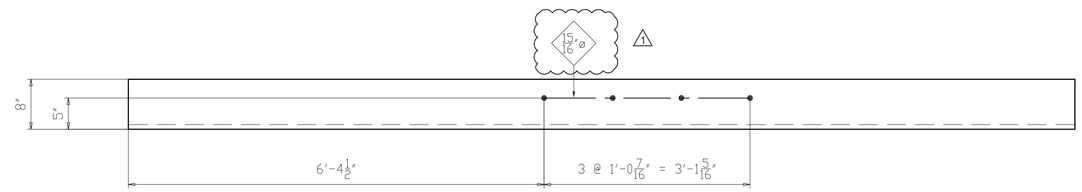

SECTION C-C

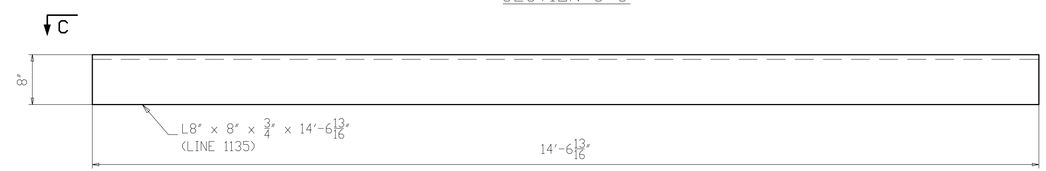

ONE ~ BOTTOM STRUT ~ x109c

(PIER 2)

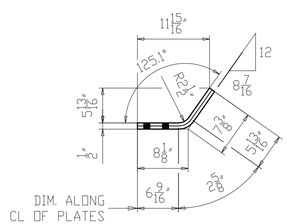

BENT DETAIL x109k

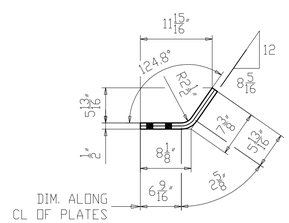

BENT DETAIL x109m

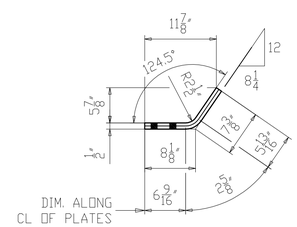

BENT DETAIL x109n

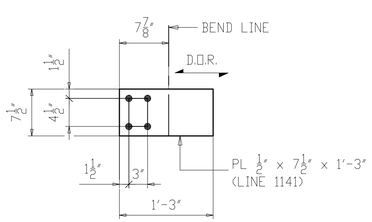

2 ~ TOP GUSSET ~ x109k

(PIER 2)

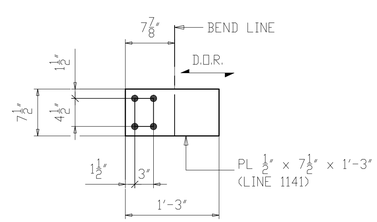

2 ~ TOP GUSSET ~ x109m

(PIER 2)

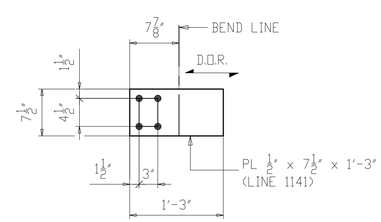

ONE ~ TOP GUSSET ~ x109n

(PIER 2)

NOTES:
1. FOR GENERAL NOTES SEE SHEET GN101.
2. ALL MATERIAL A709-50WT2 (UN).
3. T2 - DENOTES MATERIAL SUBJECT TO CHARPY V-NOTCH TESTING.
4. D.O.R. DENOTES DIRECTION OF MILL ROLLING.

NO.	DATE	REMARKS	BY
1	11/01/19	AS PER APPROVAL COMMENTS	DP

REVISIONS

Veritas STEEL
2-EAU CLAIRE, WI 3-WAUSAU, WI 4-PALATKA, FL
IENCA 1605

STRUCTURE	CUY-010-1978R, OH-10 EASTBOUND OVER GCRTA BLUE AND GREEN LINES
LOCATION	CLEVELAND, OHIO CUYAHOGA COUNTY
PROJECT NO.	17-3000
ENGINEER	MICHAEL BAKER INTERNATIONAL
CONTRACTOR	KOKOSING
ITEM	PIER K-FRAME DETAILS
SURFACE PREP.	SEE P101
OPEN HOLES	1 1/16"ø (U.N.O.)
PAINT	SEE P101

APPROVAL	DRAWN AM 05/22/19	SHEET NO.	PLANT	ORDER NO.
SHOP	CHECKED DP 07/10/19	X109	3	317023A-37

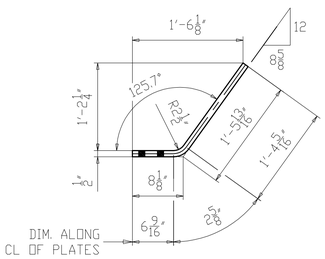

BENT DETAIL x110a

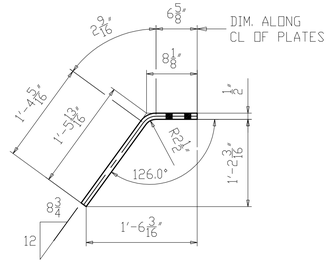

BENT DETAIL x110b

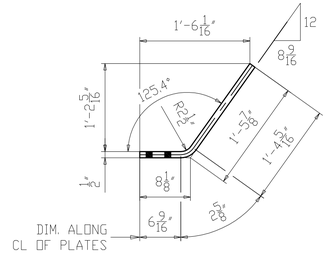

BENT DETAIL x110c

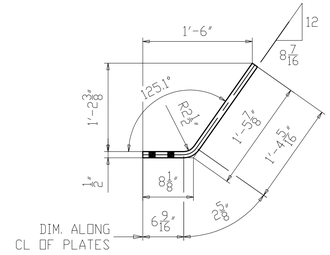

BENT DETAIL x110d

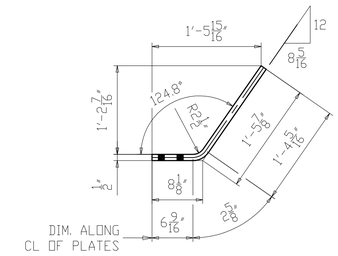

BENT DETAIL x110f

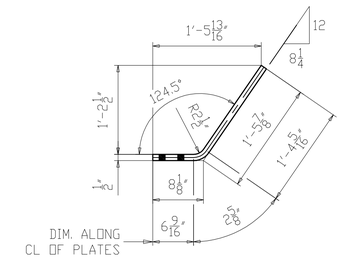

BENT DETAIL x110g

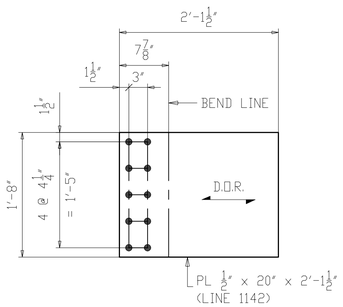

2 ~ BOTTOM GUSSET ~ x110a
(PIER 2)

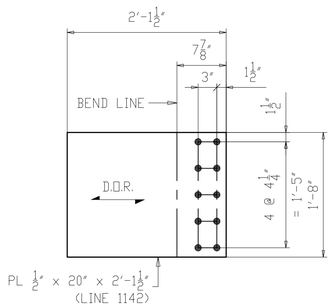

ONE ~ BOTTOM GUSSET ~ x110b
(PIER 2)

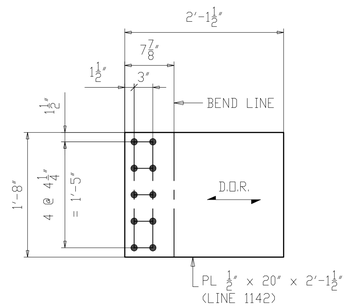

2 ~ BOTTOM GUSSET ~ x110c
(PIER 2)

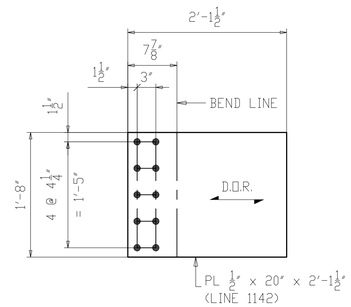

2 ~ BOTTOM GUSSET ~ x110d
(PIER 2)

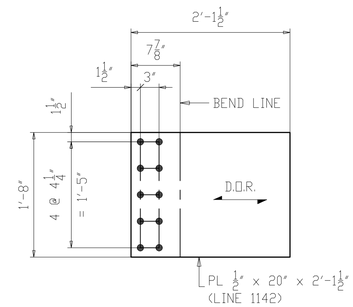

2 ~ BOTTOM GUSSET ~ x110f
(PIER 2)

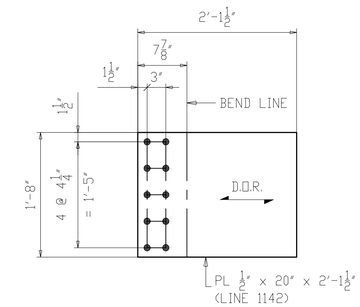

ONE ~ BOTTOM GUSSET ~ x110g
(PIER 2)

NOTES:
1. FOR GENERAL NOTES SEE SHEET GN101.
2. ALL MATERIAL A709-50WT2 (UN).
3. T2 - DENOTES MATERIAL SUBJECT TO CHARPY V-NOTCH TESTING.
4. ◄D.O.R.► DENOTES DIRECTION OF MILL ROLLING.

NO.	DATE	REMARKS	BY

REVISIONS

Veritas STEEL
2-EAU CLAIRE, WI 3-WAUSAU, WI 4-PALATKA, FL
TENCA 1605

STRUCTURE	CUY-010-1978R, OH-10 EASTBOUND OVER GCRTA BLUE AND GREEN LINES
LOCATION	CLEVELAND, OHIO CUYAHOGA COUNTY
PROJECT NO.	17-3000
ENGINEER	MICHAEL BAKER INTERNATIONAL
CONTRACTOR	KOKOSING
ITEM	PIER K-FRAME DETAILS
SURFACE PREP.	SEE P101 OPEN HOLES 1 1/16"Ø (U.N.O.)
PAINT	SEE P101

APPROVAL	DRAWN AM 05/22/19	SHEET NO.	PLANT	ORDER NO.
SHOP	CHECKED DP 07/10/19	X110	3	317023A-37

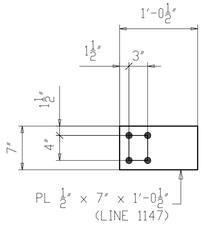

140 ~ TOP GUSSET ~ x111a
(INTERMEDIATE K-FRAME)

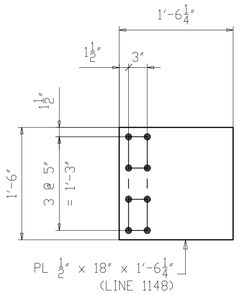

140 ~ BOTTOM GUSSET ~ x111b
(INTERMEDIATE K-FRAME)

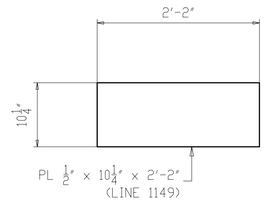

70 ~ CENTER GUSSET ~ x111c
(INTERMEDIATE K-FRAME)

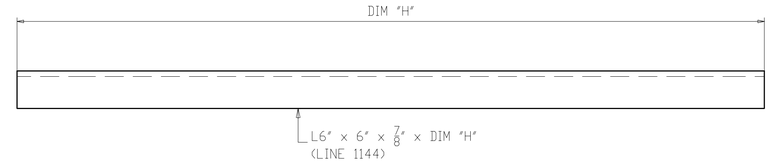

QTY "J" ~ BOTTOM STRUT ~ MARK "G"
(INTERMEDIATE K-FRAME)

MARK "G"	DIM "H"	QTY "J"
x111an	8'-11 1/4"	19
x111ap	8'-11 5/16"	17
x111at	8'-11 3/8"	12

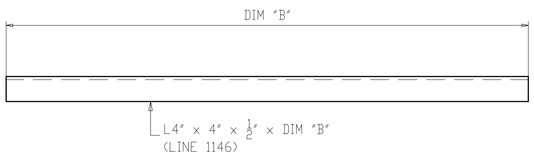

QTY "C" ~ DIAGONAL ~ MARK "A"
(INTERMEDIATE K-FRAME)

MARK "A"	DIM "B"	QTY "C"
x111d	4'-5 1/8"	7
x111f	4'-5 3/16"	13
x111g	4'-5 1/4"	6
x111k	4'-5 5/16"	12
x111m	4'-5 3/8"	6
x111n	4'-5 7/16"	5
x111p	4'-5 9/16"	7
x111t	4'-5 5/8"	10
x111v	4'-5 11/16"	8
x111w	4'-5 3/4"	10
x111y	4'-5 7/8"	7
x111aa	4'-5 15/16"	3
x111ab	4'-6"	8
x111ac	4'-6 1/8"	12
x111ad	4'-6 3/16"	6
x111af	4'-6 1/4"	13
x111ag	4'-6 5/16"	7

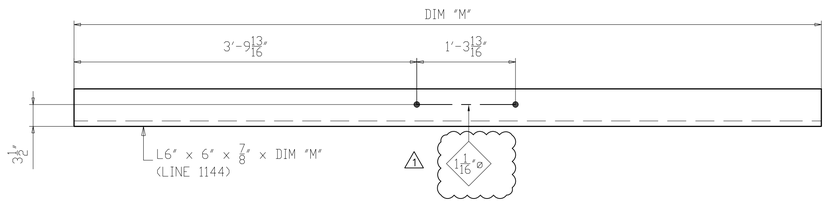

QTY "N" ~ BOTTOM STRUT ~ MARK "K"
(INTERMEDIATE K-FRAME)

MARK "K"	DIM "M"	QTY "N"
x111av	8'-11 1/4"	7
x111aw	8'-11 5/16"	6

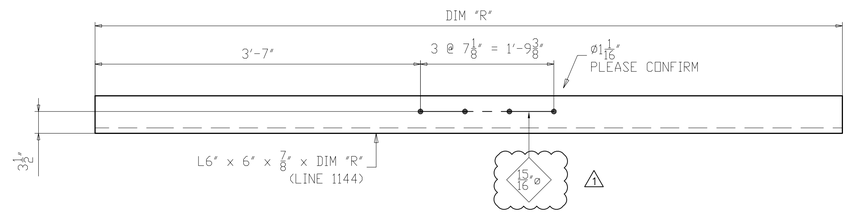

QTY "S" ~ BOTTOM STRUT ~ MARK "P"
(INTERMEDIATE K-FRAME)

MARK "P"	DIM "R"	QTY "S"
x111ay	8'-11 5/16"	7
x111ba	8'-11 3/8"	2

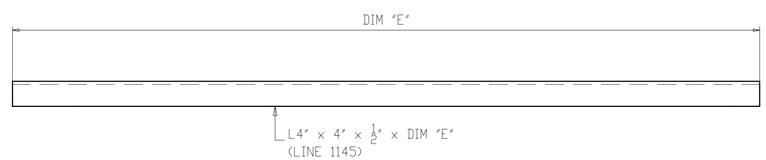

QTY "F" ~ TOP STRUT ~ MARK "D"
(INTERMEDIATE K-FRAME)

MARK "D"	DIM "E"	QTY "F"
x111ak	8'-11 5/16"	49
x111am	8'-11 3/8"	21

NOTES:
1. FOR GENERAL NOTES SEE SHEET GN101.
2. ALL MATERIAL A709-50WT2 (UN).
3. T2 - DENOTES MATERIAL SUBJECT TO CHARPY V-NOTCH TESTING.

NO.	DATE	REMARKS	BY
1	11/01/19	AS PER APPROVAL COMMENTS	DP

REVISIONS

Veritas STEEL
2-EAU CLAIRE, WI 3-WAUSAU, WI 4-PALATKA, FL
TENCA 1605

STRUCTURE: CUY-010-1978R, OH-10 EASTBOUND OVER GCRTA BLUE AND GREEN LINES
LOCATION: CLEVELAND, OHIO CUYAHOGA COUNTY
PROJECT NO.: 17-3000
ENGINEER: MICHAEL BAKER INTERNATIONAL
CONTRACTOR: KOKOSING
ITEM: INTERMEDIATE K-FRAME DETAILS
SURFACE PREP.: SEE P101 OPEN HOLES: 1 1/16"Ø (U.N.O.)
PAINT: SEE P101

APPROVAL	DRAWN AM 05/28/19	SHEET NO.	PLANT	ORDER NO.
SHOP	CHECKED DP 07/10/19	X111	3	317023A-37

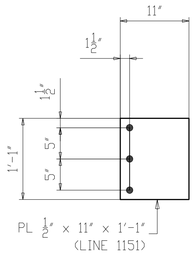

92 ~ BOTTOM GUSSET ~ x112a
(UTILITY SUPPORT)

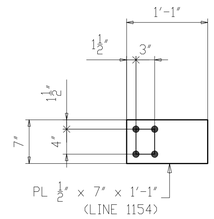

20 ~ TOP GUSSET ~ x112g
(LEAN ON BRACING)

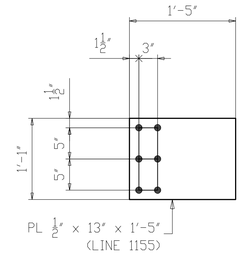

20 ~ BOTTOM GUSSET ~ x112k
(LEAN ON BRACING)

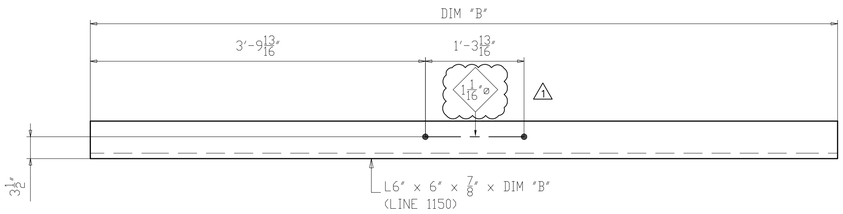

QTY "C" ~ STRUT ~ MARK "A"
(UTILITY SUPPORT)

MARK "A"	DIM "B"	QTY "C"
x112b	8'-11 1/4"	14
x112c	8'-11 5/16"	10

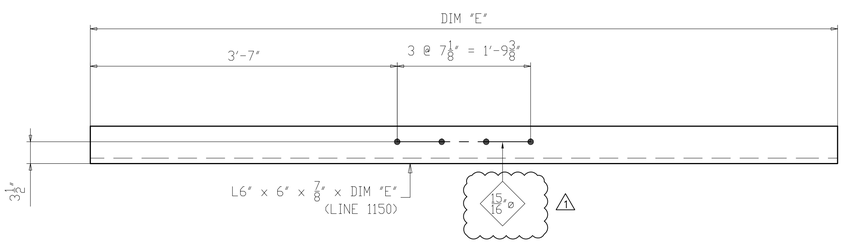

QTY "F" ~ STRUT ~ MARK "D"
(UTILITY SUPPORT)

MARK "D"	DIM "E"	QTY "F"
x112d	8'-11 5/16"	14
x112f	8'-11 3/8"	8

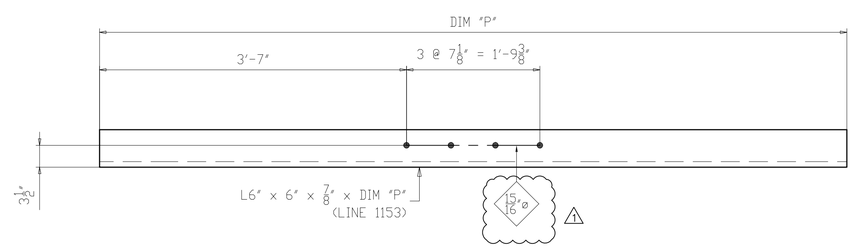

QTY "R" ~ STRUT ~ MARK "N"
(LEAN ON BRACING)

MARK "N"	DIM "P"	QTY "R"
x112v	8'-11 5/16"	2
x112w	8'-11 3/8"	2

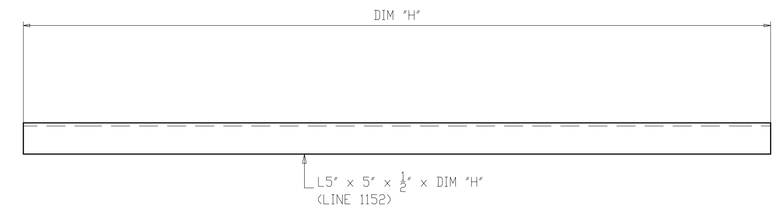

QTY "J" ~ STRUT ~ MARK "G"
(LEAN ON BRACING)

MARK "G"	DIM "H"	QTY "J"
x112m	8'-11 5/16"	8
x112n	8'-11 3/8"	2

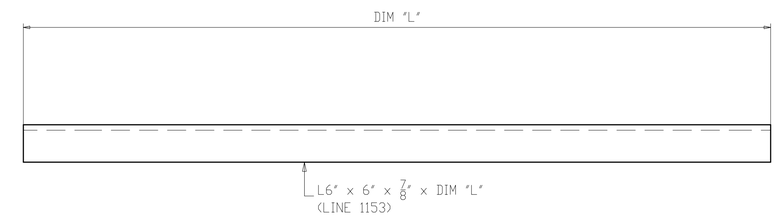

QTY "M" ~ STRUT ~ MARK "K"
(LEAN ON BRACING)

MARK "K"	DIM "L"	QTY "M"
x112p	8'-11 1/4"	5
x112t	8'-11 5/16"	1

NOTES:
1. FOR GENERAL NOTES SEE SHEET GN101.
2. ALL MATERIAL A709-50WT2 (UN).
3. T2 - DENOTES MATERIAL SUBJECT TO CHARPY V-NOTCH TESTING.

NO.	DATE	REMARKS	BY
1	11/01/19	AS PER APPROVAL COMMENTS	DP

REVISIONS

Veritas STEEL
2-EAU CLAIRE, WI 3-WAUSAU, WI 4-PALATKA, FL
IAS 1605

STRUCTURE: CUY-010-1978R, OH-10 EASTBOUND OVER GCRTA BLUE AND GREEN LINES
LOCATION: CLEVELAND, OHIO CUYAHOGA COUNTY
PROJECT NO. 17-3000
ENGINEER: MICHAEL BAKER INTERNATIONAL
CONTRACTOR: KOKOSING
ITEM: UTILITY SUPPORT & LEAN ON BRACING DETAILS
SURFACE PREP. SEE P101 OPEN HOLES 1 1/16"ø (U.N.O.)
PAINT: SEE P101

APPROVAL	DRAWN AM 06/03/19	SHEET NO.	PLANT	ORDER NO.
SHOP	CHECKED DP 07/10/19	X112	3	317023A-37

Submittal: 123

Revision:
Date Submitted: 3/18/2021
Response Due By:

kokosing CONSTRUCTION COMPANY, INC.
886 McKinley Ave.
Columbus, OH 43222
Phone: (614) 228-1029
Fax: (614) 228-7065

Project: 16051 - ODOT 173000 CUY IR 490/SR010 (OC3)
Description: BU19 Blue Green Bridge Fence Drawings

To: Nicole DeVille
Kokosing Construction Company, Inc.

Email: nfd@kokosing.biz

From: Mark Gabele, PE
Ohio Department of Transportation - District 12

Email: Mark.Gabele@dot.ohio.gov

Submittal Type:	**Submitted For:**
☐ Engineered Drawings	☒ Approval
☒ Shop Drawings	☐ Record
☐ Working Drawings	☐ Other
☐ CPM Schedule	
☐ Material Certifications / Test Results	**Sent Via:**
☐ Reports	☒ Attached (Electronic)
☐ Product Data/Samples	☐ Attached (Hard Copy)
☐ Other:	

Submittal #	Copies	Spec #	Rev. #	Description	
123	1			123 – BU19 Blue Green Bridge Fence Drawings	

Comments:
Attached are the drawings for Blue Green Bridge. Dimensions were adjusted in DRFI 103.

Signed: ____ Nicole DeVille _____

Submittal: 123

Revision:
Date Submitted: 3/18/2021
Response Due By:

kokosing CONSTRUCTION COMPANY, INC.
886 McKinley Ave.
Columbus, OH 43222
Phone: (614) 228-1029
Fax: (614) 228-7065

Project: 16051 - ODOT 173000 CUY IR 490/SR010 (OC3)
Description: BU19 Blue Green Bridge Fence Drawings

To: Nicole DeVille
Kokosing Construction Company, Inc.

Email: nfd@kokosing.biz

From: Mark Gabele, PE
Ohio Department of Transportation - District 12

Email: Mark.Gabele@dot.ohio.gov

Submittal Type:	**Submitted For:**
☐ Engineered Drawings	☒ Approval
☒ Shop Drawings	☐ Record
☐ Working Drawings	☐ Other
☐ CPM Schedule	
☐ Material Certifications / Test Results	**Sent Via:**
☐ Reports	☒ Attached (Electronic)
☐ Product Data/Samples	☐ Attached (Hard Copy)
☐ Other:	

Submittal #	Copies	Spec #	Rev. #	Description	
123	1			123 – BU19 Blue Green Bridge Fence Drawings	

Comments:
Attached are the drawings for Blue Green Bridge. Dimensions were adjusted in DRFI 103.

Signed: ____ Nicole DeVille _____

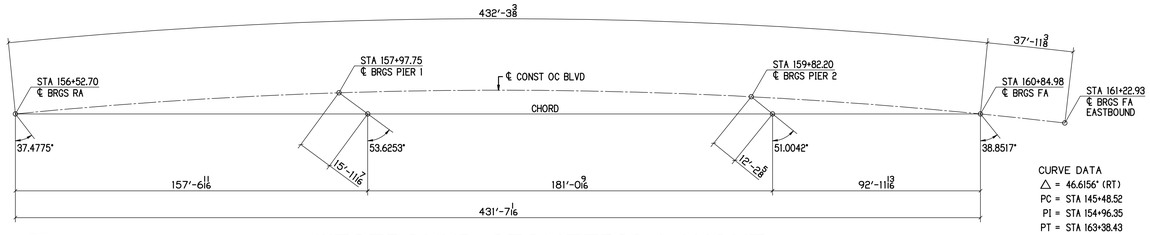

CURVE DATA
△ = 46.6156° (RT)
PC = STA 145+48.52
PI = STA 154+96.35
PT = STA 163+38.43
R = 2200.00
L = 1789.91
T = 947.83
E = 195.49

WESTBOUND GEOMETRIC LAYOUT

PLAN NORTH

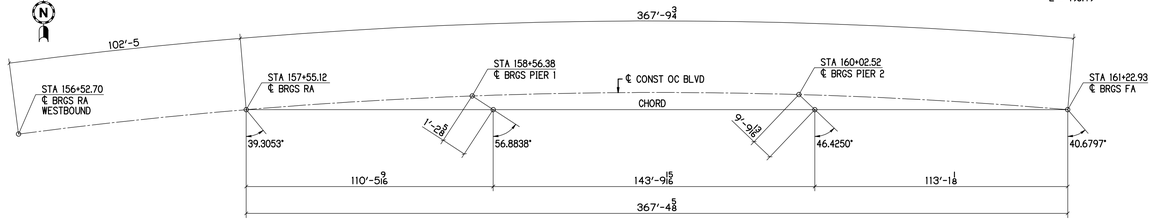

EASTBOUND GEOMETRIC LAYOUT

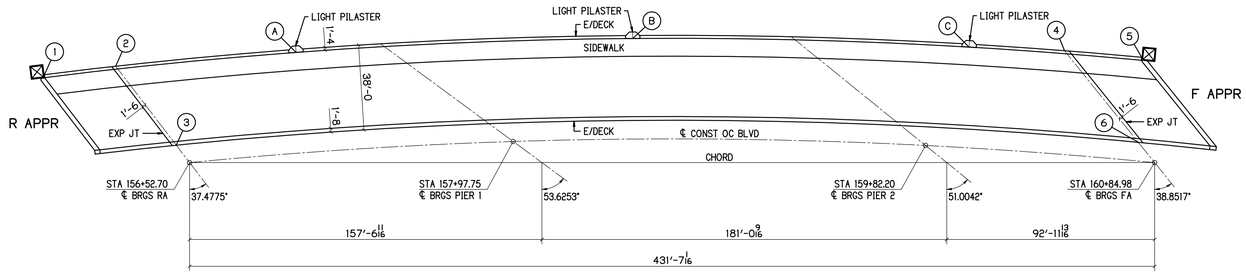

WESTBOUND GENERAL PLAN

PLAN NORTH

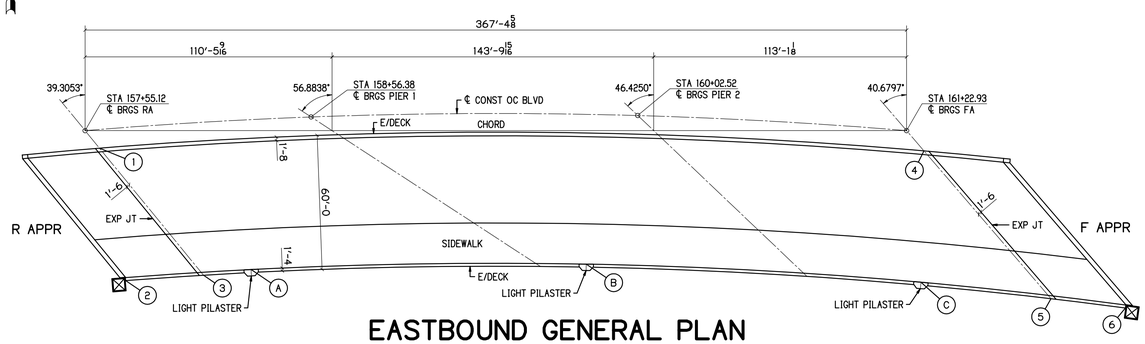

EASTBOUND GENERAL PLAN

APPROVAL SUBMIT FOR ANCHOR AND POST LOCATIONS ONLY 03-14-21

INDEX OF SHEETS

SHEET #	DESCRIPTION
E400	GENERAL PLANS & NOTES
E401	PARAPET DIMENSION PLANS
E402	ANC ROD SECTIONS & DETAILS
E403	ANCHOR SETTING PLAN WB NORTH PARAPET
E404	ANCHOR SETTING PLAN WB SOUTH PARAPET
E405	ANCHOR SETTING PLAN EB NORTH PARAPET
E406	ANCHOR SETTING PLAN EB SOUTH PARAPET

VERTICAL CURVE DATA

VPC STA 159+00.00 EL = 686.95
VPI STA 160+00.00 EL = 688.80
VPT STA 161+00.00 EL = 686.39

LC = 200.0000
G1 = 1.8500%
G2 = -2.4100%
K = 46.9484
E = 1.0650
RC = 2.1300
TP = STA 15986.8545 EL = 687.7534

STATION INCREMENT = 50.0000
GRADE SHOWN FOR STA IS FROM PREVIOUS STA

STA 15900.0000 EL = 686.9500 VPC STA
STA 15950.0000 EL = 687.6088 GRD = 1.3175%
STA 16000.0000 EL = 687.7350 GRD = 0.2525%
STA 16050.0000 EL = 687.3288 GRD = -0.8125%
STA 16100.0000 EL = 686.3900 GRD = -1.8775% VPT STA

VERTICAL CURVE NOTE

THE VERTICAL CURVE PRESENTS NEGLIGIBLE CHANGES TO LENGTH AT LESS THAN 1/8" IN 50'-0 AT THE 1.85% GRADE. THE PLAN DIMENSIONS SHALL BE USED AS ACCURATE WITHOUT ANY ADDITION FOR GRADE.

WB STATIONS & OFFSETS

QUAN	STATION	OFFSET
1	155+93.18	46'-4 LT
2	156+24.62	46'-4 LT
3	156+47.55	8'-4 LT
4	160+40.85	46'-4 LT
5	160+74.78	46'-4 LT
6	160+76.84	8'-4 LT

WB LIGHT PILASTER LOCATIONS

QUAN	STATION	OFFSET
A	157+03.89	45'-0 LT
B	158+51.58	45'-0 LT
C	159+99.08	45'-0 LT

EB STATIONS & OFFSETS

QUAN	STATION	OFFSET
1	157+60.87	8'-4 RT
2	157+67.99	68'-4 RT
3	158+03.99	68'-4 RT
4	161+31.45	8'-4 RT
5	161+95.86	68'-4 RT
6	162+30.42	68'-4 RT

WB LIGHT PILASTER LOCATIONS

QUAN	STATION	OFFSET
A	158+26.07	67'-0 RT
B	159+80.74	67'-0 RT
C	161+35.40	67'-0 RT

GENERAL NOTES

FINISH

THE FABRICATED RAILING AND HARDWARE (EXCEPT EMBED ANCHORS) SHALL BE GALVANIZED PER C&MS 711.02 EXCEPT THAT FABRICATED RAILING ELEMENTS SHALL NOT BE POST TREATED WITH WATER QUENCHING OR CHROMATE CONVERSION COATED.

ALL VENT HOLES REQUIRED FOR GALVANIZING SHALL BE AT THE DISCRETION OF THE FABRICATOR AND GALVANIZER.

THE PAINT SYSTEM SHALL BE PROVIDED UNDER A SEPARATE COVER. THE FINISH COAT SHALL MATCH FEDERAL COLOR STANDARD FS 595C-17038 BLACK.

WELDING

AWS - BRIDGE WELDING CODE D1.5 - LATEST EDITION

AWS - STRUCTURAL WELDING CODE D1.1 - LATEST EDITION

WELD PROCESS SHALL BE GMAW

RAILING NOTES

1. ALL POSTS SHALL BE FABRICATED AND SET NORMAL (PERPENDICULAR) TO GRADE FOR BU-19, BLUE-GREEN LINES. THE SLOPE GRADE IS NOT GREAT ENOUGH TO SUPPORT FABRICATING PLUMB POSTS WITH SLOPED RAIL PANELS.
2. ALL EMBEDDED ANCHORS SHALL BE INSTALLED WITH A TOLERANCE OF +/- 1/16".
3. ALL TEMPLATE PLATES FOR THE ANCHORS SHALL NOT BE SUPPLIED BY THIS FABRICATOR. THE CONTRACTOR SHALL BE RESPONSIBLE TO INSTALL THE ANCHORS WITH THE PRECISION REQUIRED FOR POST INSTALLATION.
4. ALL PLASTIC BASE & SHIMS AND CAULKING SHALL NOT BE SUPPLIED BY THIS FABRICATOR. THE CONTRACTOR OR INSTALLER SHALL BE REQUIRED TO SUPPLY AND INSTALL THESE REQUIREMENTS PER THE CONTRACT.

WIRE MESH NOTES

1. THE WELDED WIRE MESH SHALL BE 10.5 GA CORE WIRE, GALVANIZED AFTER WELDING.
2. THE WIRE MESH PATTERN SHALL BE 1x1 SET IN THE SQUARE POSITION AS PLUMB.
3. THE WIRE MESH PANELS SHALL BE FIELD INSTALLED USING CLAMP BARS.
4. THE CLAMP BARS SHALL BE SHOP DRILLED FOR FASTENER LOCATIONS.
5. FIELD INSTALLATION SHALL USE THE 1/4" SELF DRILL AND TAP SCREWS.
6. THE TEK SCREW HEADS SHALL BE FIELD PAINTED BLACK AFTER INSTALLATION.

MATERIAL NOTES

NO	MATERIAL	ASTM	GRADE	TYPE	NOTES
1	PLATES, ANGLES & BARS	A709	36/50		
2	HSS RAIL TUBES	A500	B		
3	WIRE MESH	A185-1064			

FASTENER NOTES

NO	MATERIAL	ASTM/ANSI	GRADE	TYPE	REMARKS
1	HIGH STRENGTH BOLTS	A325			GALV ASTM A153
2	HIGH STRENGTH NUTS	A563			GALV ASTM A153
3	HIGH STRENGTH WASHERS	F436			GALV ASTM A153
4	SS ALL THREAD ANCHOR RODS	A320	B8	304	MILL FINISH
5	SS HEX BOLTS	A194	B8	304	MILL FINISH
6	SS HEX NUTS	A194	B8	304	MILL FINISH
7	SS WASHERS	A194	B8	304	MILL FINISH

MATERIAL QUANTITY

DESCRIPTION	POSTS	CONTRACT LN/FT	ACTUAL LN/FT	REMARKS
BU-19 DECORATIVE FENCE OH-10 WB	205	922'-0	929'-5 5/8	+7'-5 5/8
BU-19 DECORATIVE FENCE OH-10 EB	185	820'-0	824'-7 13/16	+4'-7 13/16
BU-19 DECORATIVE FENCE OH-10 TOTALS	390	1742'-0	1754'-1 7/16	+12'-1 7/16

BU-19 BLUE-GREEN LINES

P.H. DREW INC.
2450 N. RACEWAY RD. - P.O. BOX 34295
INDIANAPOLIS, INDIANA 46234
PHONE : (317) 297-5152
FAX : (317) 297-5313

APPROVAL

CUY-IR490 / SR010-2.09 / 19.28
DECORATIVE FENCE
GENERAL PLANS & NOTES

REVISION

REV	DATE	DESCRIPTION	BY

APPROVAL RECORD

DATE	ISSUED	APP DATE	APPROVAL STATUS

STATE	OHIO
COUNTY	CUYAHOGA (CITY OF CLEVELAND)
PROJECT	3000 (17)
CONTRACT	PID 96833
SECTION	
STRUCTURE	
STATE JOB	
CUSTOMER	LAKE ERIE CONSTRUCTION COMPANY
CONTRACTOR	
ARCH/ENG	
REFERENCE	
ITEM	
FINISH	SEE NOTES-SHT E400

DRAWN BY	CHECKED BY	MRH NO	JOB MGR	DWG STATUS	JOB NO.	TOTAL SHEETS	SHEET
MRH 12-14-20		1914	JL	ANC SUBMIT 03-14-20	19-1108		E400

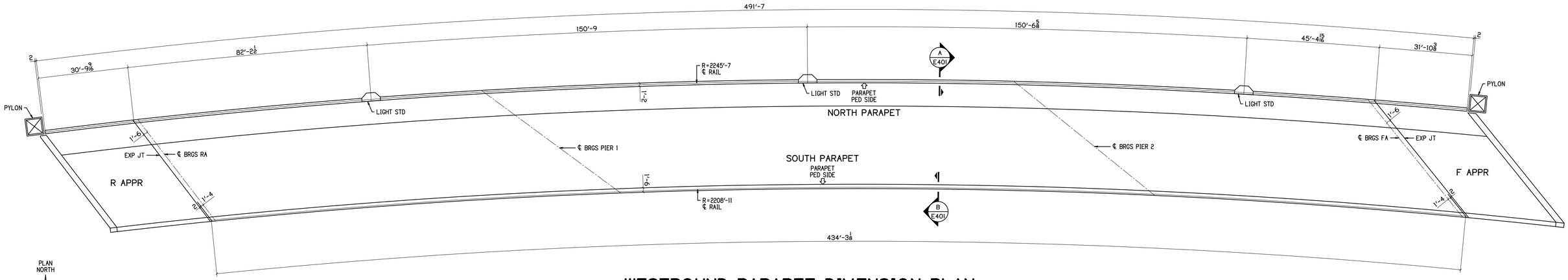

PLAN NORTH

WESTBOUND PARAPET DIMENSION PLAN

ALL DIMENSIONS TAKEN FROM ℄ RAIL
SCALE 1/16" = 1'-0

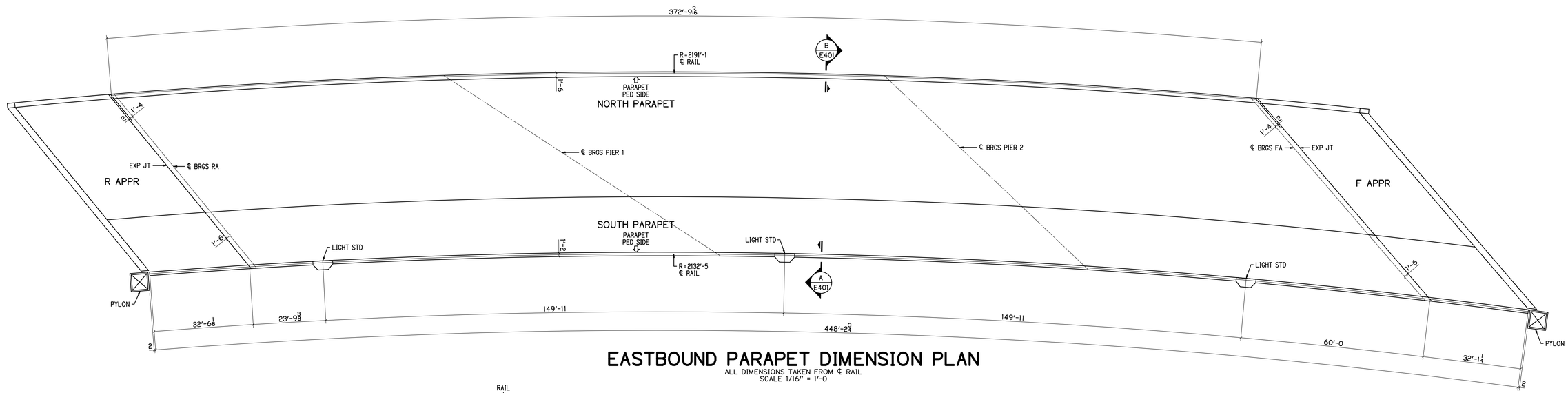

EASTBOUND PARAPET DIMENSION PLAN

ALL DIMENSIONS TAKEN FROM ℄ RAIL
SCALE 1/16" = 1'-0

BU-19 BLUE-GREEN LINES

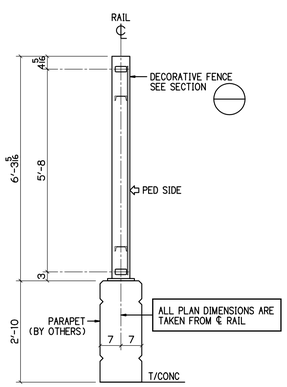

SECTION A E401
1/2" = 1'-0

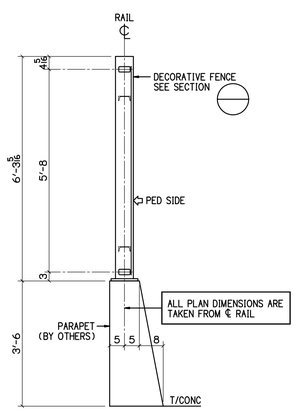

SECTION B E401
1/2" = 1'-0

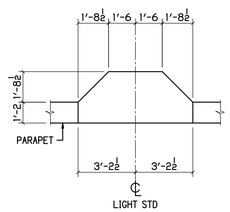

LIGHT STD DETAIL

P.H. DREW INC.
2450 N. RACEWAY RD. - P.O. BOX 34295
INDIANAPOLIS, INDIANA 46234
PHONE : (317) 297-5152
FAX : (317) 297-5313

APPROVAL

CUY-IR490 / SR010-2.09 / 19.28

DECORATIVE FENCE

PARAPET DIMENSION PLANS

REVISION	REV	DATE	DESCRIPTION	BY

STATE	OHIO
COUNTY	CUYAHOGA (CITY OF CLEVELAND)
PROJECT	3000 (17)
CONTRACT	PID 96833
SECTION	
STRUCTURE	
STATE JOB	
CUSTOMER	LAKE ERIE CONSTRUCTION COMPANY
CONTRACTOR	
ARCH/ENG	
REFERENCE	
ITEM	
FINISH	SEE NOTES-SHT E400

APPROVAL RECORD	DATE	ISSUED	APP DATE	APPROVAL STATUS

DRAWN BY	CHECKED BY	MRH NO	JOB MGR	DWG STATUS	JOB NO.	TOTAL SHEETS	SHEET
MRH 12-14-20		1914	JL	ANC SUBMIT 03-14-20	19-1108		E401

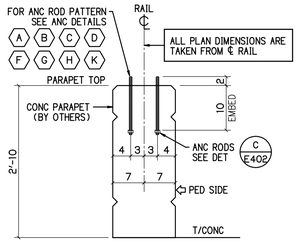

SECTION A E402

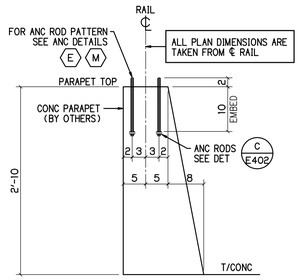

SECTION B E402

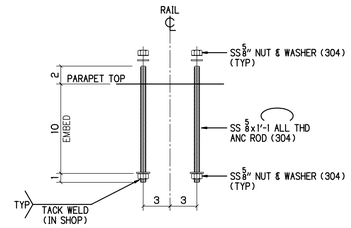

DETAIL C E402

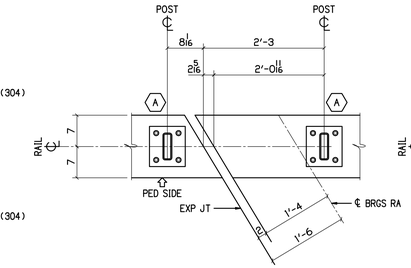

DETAIL D E402
3/4" = 1'-0

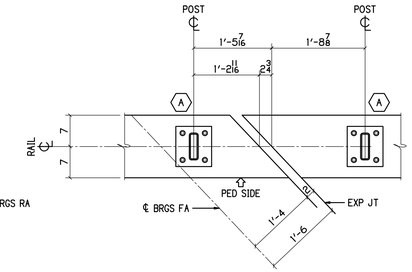

DETAIL E E402
3/4" = 1'-0

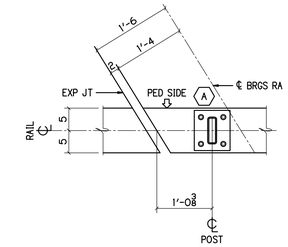

DETAIL F E402
3/4" = 1'-0

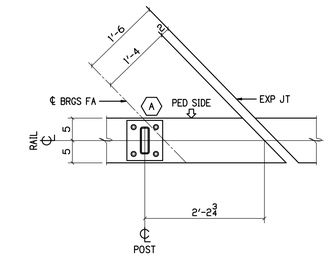

DETAIL G E402
3/4" = 1'-0

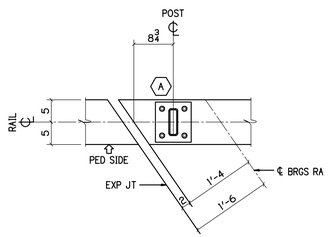

DETAIL H E402
3/4" = 1'-0

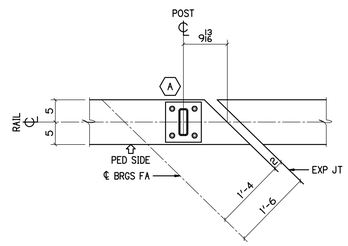

DETAIL K E402
3/4" = 1'-0

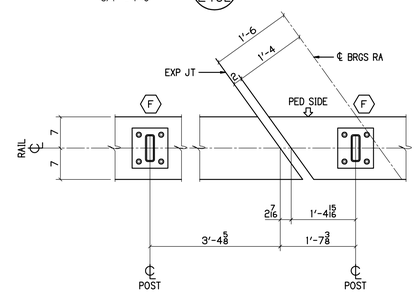

DETAIL M E402
3/4" = 1'-0

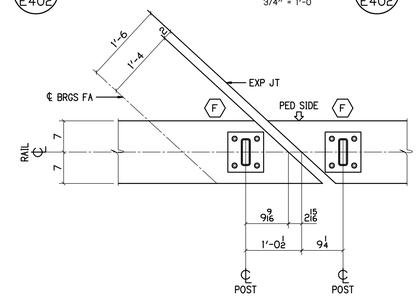

DETAIL N E402
3/4" = 1'-0

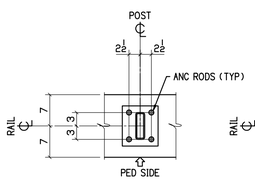

ANC DETAIL A

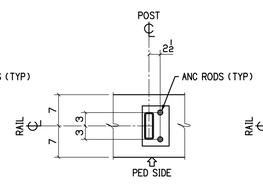

ANC DETAIL B

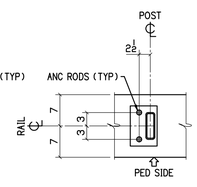

ANC DETAIL C

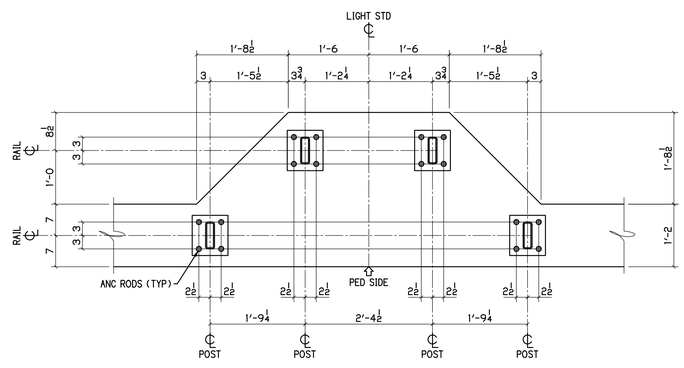

ANC DETAIL D

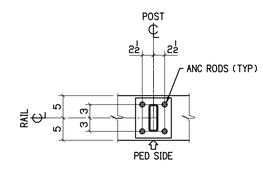

ANC DETAIL E

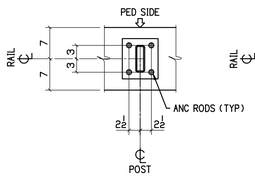

ANC DETAIL F

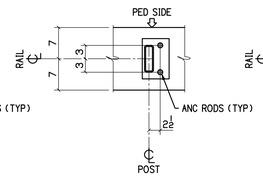

ANC DETAIL G

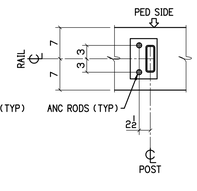

ANC DETAIL H

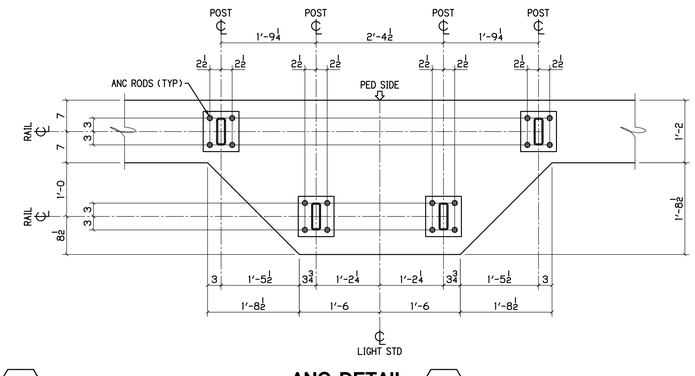

ANC DETAIL K

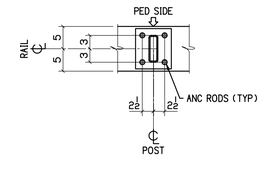

ANC DETAIL M

BU-19 BLUE-GREEN LINES

P.H. DREW INC.
2450 N. RACEWAY RD. - P.O. BOX 34295
INDIANAPOLIS, INDIANA 46234
PHONE : (317) 297-5152
FAX : (317) 297-5313

APPROVAL

CUY-IR490 / SR010-2.09 / 19.28

DECORATIVE FENCE

ANC ROD SECTIONS & DETAILS

REVISION	REV	DATE	DESCRIPTION	BY

APPROVAL RECORD	DATE	ISSUED	APP DATE	APPROVAL STATUS

STATE	OHIO
COUNTY	CUYAHOGA (CITY OF CLEVELAND)
PROJECT	3000 (17)
CONTRACT	PID 96833
SECTION	
STRUCTURE	
STATE JOB	
CUSTOMER	LAKE ERIE CONSTRUCTION COMPANY
CONTRACTOR	
ARCH/ENG	
REFERENCE	
ITEM	
FINISH	SEE NOTES-SHT E400

DRAWN BY	CHECKED BY	MRH NO	JOB MGR	DWG STATUS	JOB NO.	TOTAL SHEETS	SHEET
MRH 12-14-20		1914	JL	ANC SUBMIT 03-14-20	19-1108		E402

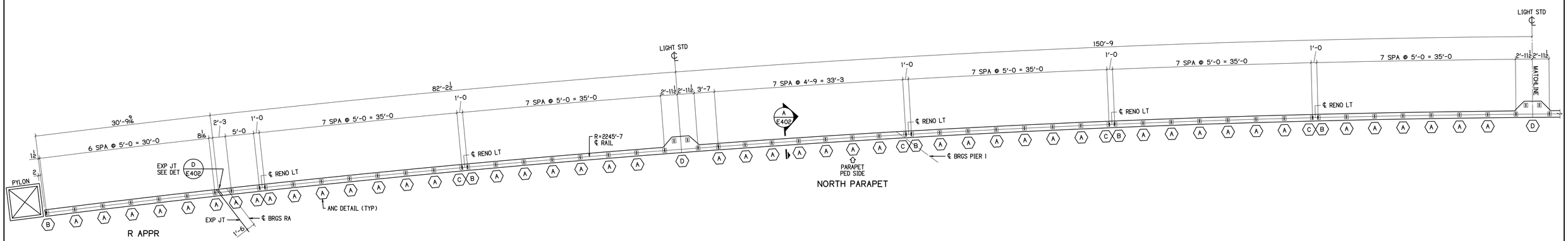

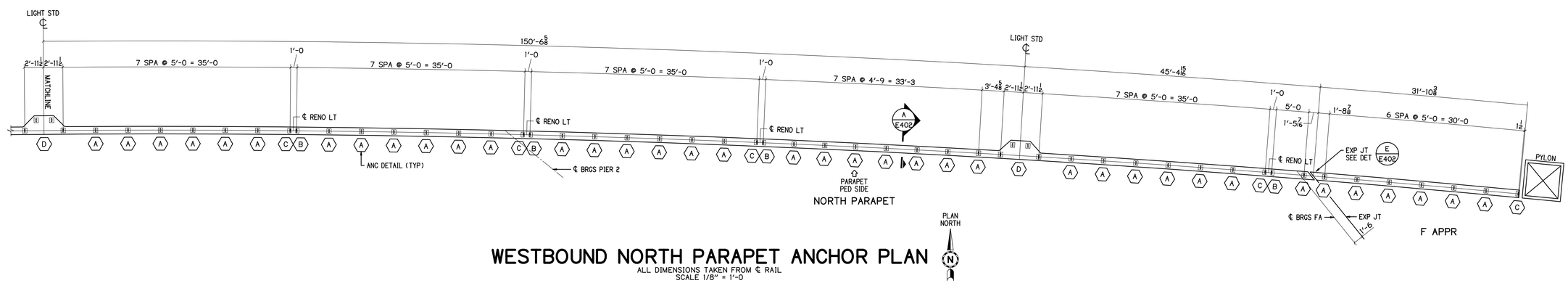

WESTBOUND NORTH PARAPET ANCHOR PLAN

ALL DIMENSIONS TAKEN FROM ℄ RAIL
SCALE 1/8" = 1'-0

SEE SHEET E402 FOR ANC ROD DETAILS

PLAN NORTH

BU-19 BLUE-GREEN LINES

P.H. DREW INC.
2450 N. RACEWAY RD. - P.O. BOX 34295
INDIANAPOLIS, INDIANA 46234
PHONE : (317) 297-5152
FAX : (317) 297-5313

APPROVAL

CUY-IR490 / SR010-2.09 / 19.28

DECORATIVE FENCE

ANCHOR SETTING PLAN WB NORTH PARAPET

REVISION

REV	DATE	DESCRIPTION	BY

APPROVAL RECORD

DATE	ISSUED	APP DATE	APPROVAL STATUS

STATE	OHIO
COUNTY	CUYAHOGA (CITY OF CLEVELAND)
PROJECT	3000 (17)
CONTRACT	PID 96833
SECTION	
STRUCTURE	
STATE JOB	
CUSTOMER	LAKE ERIE CONSTRUCTION COMPANY
CONTRACTOR	
ARCH/ENG	
REFERENCE	
ITEM	
FINISH	SEE NOTES-SHT E400

DRAWN BY	CHECKED BY	MRH NO	JOB MGR	DWG STATUS	JOB NO.	TOTAL SHEETS	SHEET
MRH 12-14-20		1914	JL	ANC SUBMIT 03-14-20	19-1108		E403

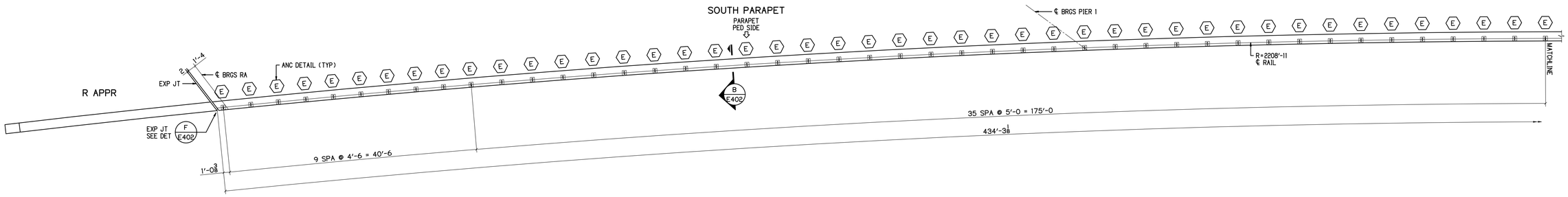

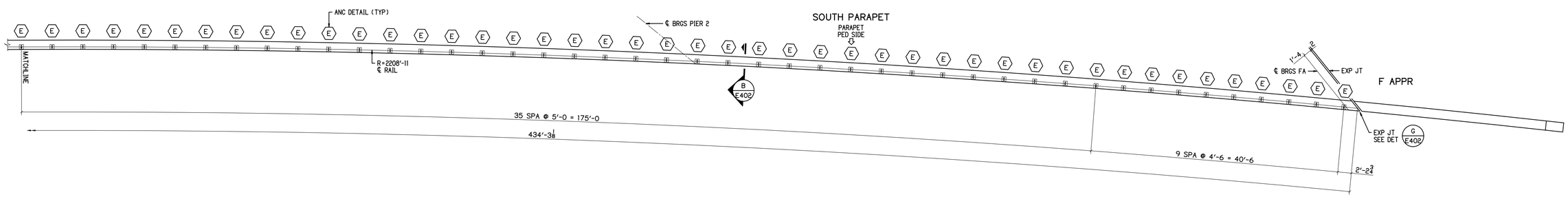

PLAN NORTH

WESTBOUND SOUTH PARAPET ANCHOR PLAN

ALL DIMENSIONS TAKEN FROM ℄ RAIL
SCALE 1/8" = 1'-0

SEE SHEET E402 FOR ANC ROD DETAILS

BU-19 BLUE-GREEN LINES

P.H. DREW INC.
2450 N. RACEWAY RD. - P.O. BOX 34295
INDIANAPOLIS, INDIANA 46234
PHONE : (317) 297-5152
FAX : (317) 297-5313

APPROVAL

CUY-IR490 / SR010-2.09 / 19.28

DECORATIVE FENCE

ANCHOR SETTING PLAN WB SOUTH PARAPET

REVISION	REV	DATE	DESCRIPTION	BY

STATE	OHIO
COUNTY	CUYAHOGA (CITY OF CLEVELAND)
PROJECT	3000 (17)
CONTRACT	PID 96833
SECTION	
STRUCTURE	
STATE JOB	

APPROVAL RECORD	DATE	ISSUED	APP DATE	APPROVAL STATUS

CUSTOMER	LAKE ERIE CONSTRUCTION COMPANY
CONTRACTOR	
ARCH/ENG	
REFERENCE	
ITEM	
FINISH	SEE NOTES - SHT E400

DRAWN BY	CHECKED BY	MRH NO	JOB MGR	DWG STATUS	JOB NO.	TOTAL SHEETS	SHEET
MRH 12-14-20		1914	JL	ANC SUBMIT 03-14-20	19-1108		E404

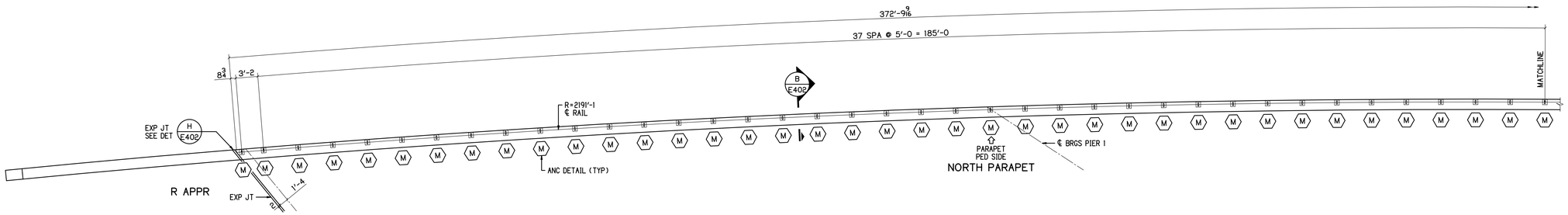

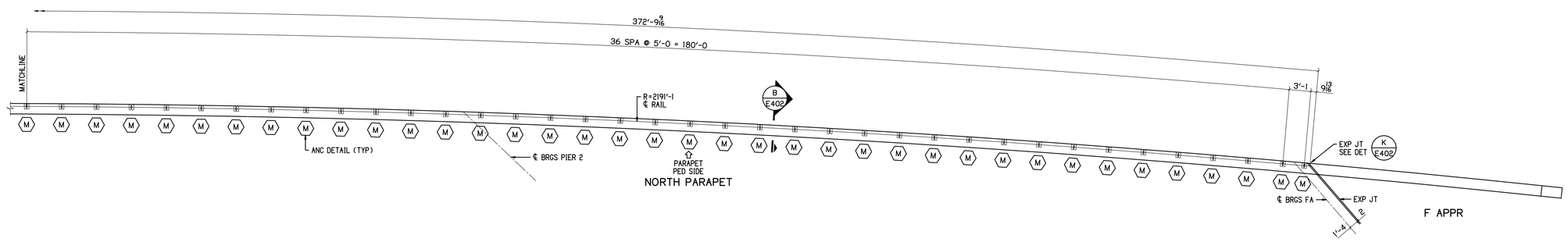

EASTBOUND NORTH PARAPET ANCHOR PLAN

ALL DIMENSIONS TAKEN FROM ℄ RAIL
SCALE 1/8" = 1'-0

SEE SHEET E402 FOR ANC ROD DETAILS

PLAN NORTH

BU-19 BLUE-GREEN LINES

P.H. DREW INC.
2450 N. RACEWAY RD. - P.O. BOX 34295
INDIANAPOLIS, INDIANA 46234
PHONE : (317) 297-5152
FAX : (317) 297-5313

APPROVAL

CUY-IR490 / SR010-2.09 / 19.28

DECORATIVE FENCE

ANCHOR SETTING PLAN EB NORTH PARAPET

REVISION

REV	DATE	DESCRIPTION	BY

APPROVAL RECORD

DATE	ISSUED	APP DATE	APPROVAL STATUS

STATE	OHIO
COUNTY	CUYAHOGA (CITY OF CLEVELAND)
PROJECT	3000 (17)
CONTRACT	PID 96833
SECTION	
STRUCTURE	
STATE JOB	
CUSTOMER	LAKE ERIE CONSTRUCTION COMPANY
CONTRACTOR	
ARCH/ENG	
REFERENCE	
ITEM	
FINISH	SEE NOTES-SHT E400

DRAWN BY	CHECKED BY	MRH NO	JOB MGR	DWG STATUS	JOB NO.	TOTAL SHEETS	SHEET
MRH 12-14-20		1914	JL	ANC SUBMIT 03-14-20	19-1108		E405

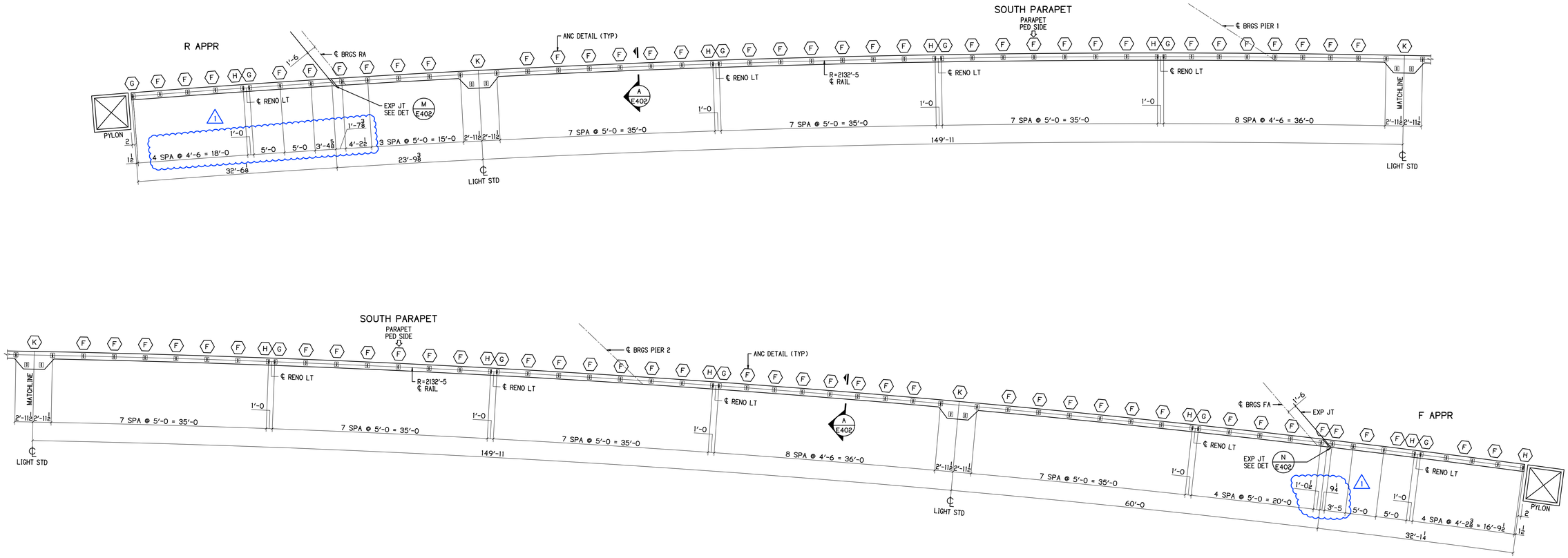

EASTBOUND SOUTH PARAPET ANCHOR PLAN

ALL DIMENSIONS TAKEN FROM ℄ RAIL
SCALE 1/8" = 1'-0

PLAN NORTH

SEE SHEET E402 FOR ANC ROD DETAILS

BU-19 BLUE-GREEN LINES

P.H. DREW INC.
2450 N. RACEWAY RD. - P.O. BOX 34295
INDIANAPOLIS, INDIANA 46234
PHONE : (317) 297-5152
FAX : (317) 297-5313

APPROVAL

CUY-IR490 / SR010-2.09 / 19.28

DECORATIVE FENCE

ANCHOR SETTING PLAN EB SOUTH PARAPET

REVISION

REV	DATE	DESCRIPTION	BY
1	03-10-21	REV PER RFI ANSWERS	MRH

APPROVAL RECORD

DATE	ISSUED	APP DATE	APPROVAL STATUS

STATE	OHIO
COUNTY	CUYAHOGA (CITY OF CLEVELAND)
PROJECT	3000 (17)
CONTRACT	PID 96833
SECTION	
STRUCTURE	
STATE JOB	
CUSTOMER	LAKE ERIE CONSTRUCTION COMPANY
CONTRACTOR	
ARCH/ENG	
REFERENCE	
ITEM	
FINISH	SEE NOTES-SHT E400

DRAWN BY	CHECKED BY	MRH NO	JOB MGR	DWG STATUS	JOB NO.	TOTAL SHEETS	SHEET
MRH 12-14-20		1914	JL	ANC SUBMIT 03-14-20	19-1108		E406

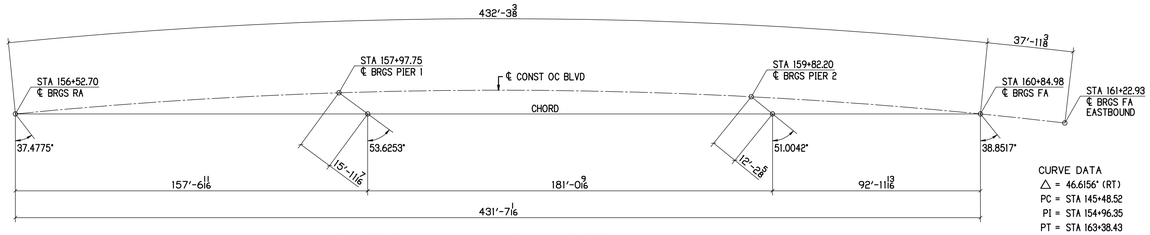

CURVE DATA
△ = 46.6156° (RT)
PC = STA 145+48.52
PI = STA 154+96.35
PT = STA 163+38.43
R = 2200.00
L = 1789.91
T = 947.83
E = 195.49

WESTBOUND GEOMETRIC LAYOUT

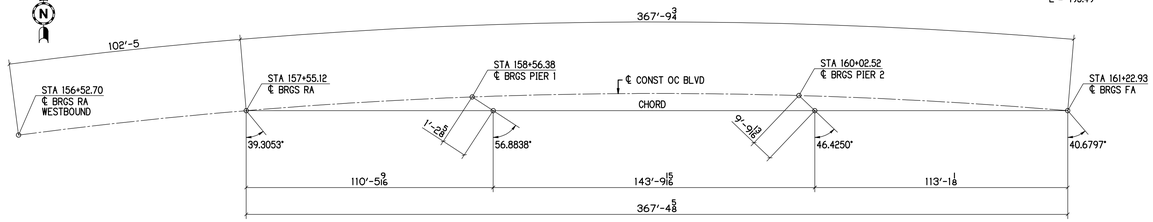

EASTBOUND GEOMETRIC LAYOUT

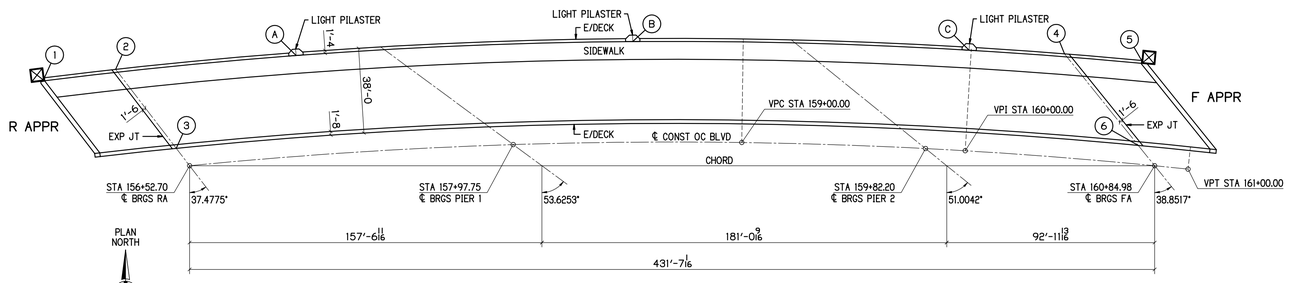

WESTBOUND GENERAL PLAN

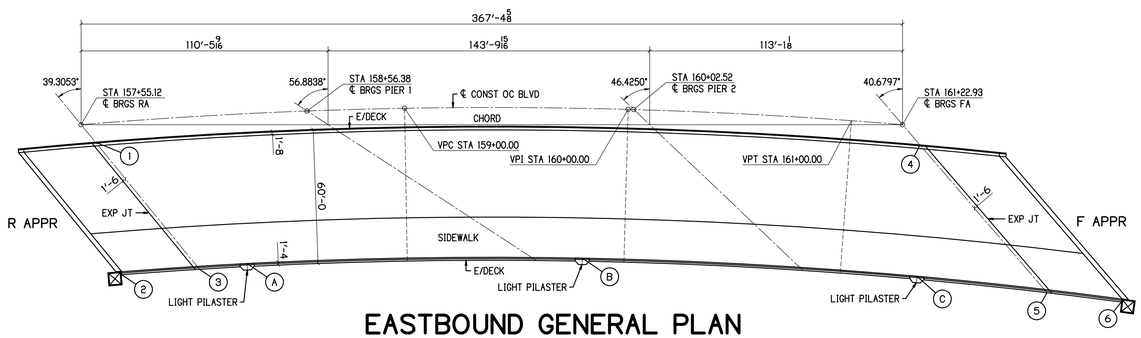

EASTBOUND GENERAL PLAN

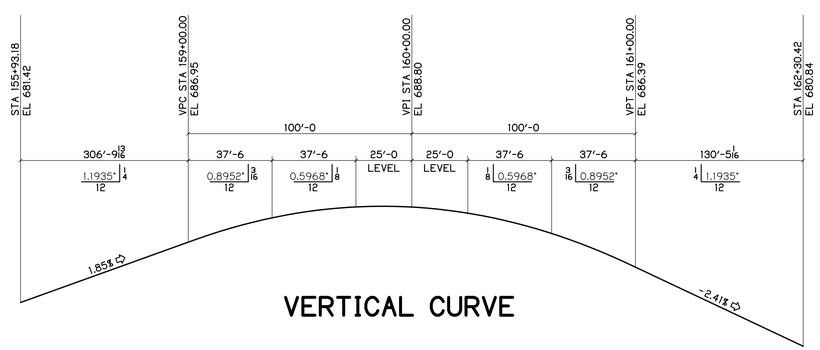

VERTICAL CURVE

VERTICAL CURVE DATA

VPC STA 159+00.00 EL = 686.95
VPI STA 160+00.00 EL = 688.80
VPT STA 161+00.00 EL = 686.39

LC = 200.0000
G1 = 1.8500%
G2 = -2.4100%
K = 46.9484
E = 1.0650
RC = 2.1300
TP = STA 15986.8545 EL = 687.7534

STATION INCREMENT = 50.0000
GRADE SHOWN FOR STA IS FROM PREVIOUS STA

STA 15900.0000 EL = 686.9500 VPC STA
STA 15950.0000 EL = 687.6088 GRD = 1.3175%
STA 16000.0000 EL = 687.7350 GRD = 0.2525%
STA 16050.0000 EL = 687.3288 GRD = -0.8125%
STA 16100.0000 EL = 686.3900 GRD = -1.8775% VPT STA

VERTICAL CURVE NOTE

THE VERTICAL CURVE PRESENTS NEGLIGIBLE CHANGES TO LENGTH AT LESS THAN 1/8" IN 50'-0 AT THE 1.85% GRADE. THE PLAN DIMENSIONS SHALL BE USED AS ACCURATE WITHOUT ANY ADDITION FOR GRADE.

INDEX OF SHEETS

SHEET #	DESCRIPTION
E400	GENERAL PLANS & NOTES
E401	PARAPET DIMENSION PLANS
E402	ANC ROD SECTIONS & DETAILS
E403	ANCHOR SETTING PLAN WB NORTH PARAPET
E404	ANCHOR SETTING PLAN WB SOUTH PARAPET
E405	ANCHOR SETTING PLAN EB NORTH PARAPET
E406	ANCHOR SETTING PLAN EB SOUTH PARAPET
E407	WESTBOUND NORTH PARAPET RAIL ELEVATION
E408	WESTBOUND SOUTH PARAPET RAIL ELEVATION
E409	EASTBOUND NORTH PARAPET RAIL ELEVATION
E410	EASTBOUND SOUTH PARAPET RAIL ELEVATION
E411	RAIL STANDARD DETAILS
E412	RAIL @ LIGHT STD DETAILS
E413	WIRE ROPE DETAILS
E414	RAIL @ LIGHT STD DETAILS - SLOPE
400	POSTS, ANCHORS & FIELD BOLTS
401 - 434	POSTS
435 - 489	RAIL PANELS
490 - 492	WIRE MESH
493 - 495	CLAMP BARS
496 - 498	POSTS

WB STATIONS & OFFSETS

QUAN	STATION	OFFSET
1	155+93.18	46'-4 LT
2	156+24.62	46'-4 LT
3	156+47.55	8'-4 LT
4	160+40.85	46'-4 LT
5	160+74.78	46'-4 LT
6	160+76.84	8'-4 LT

WB LIGHT PILASTER LOCATIONS

QUAN	STATION	OFFSET
A	157+03.89	45'-0 LT
B	158+51.58	45'-0 LT
C	159+99.08	45'-0 LT

EB STATIONS & OFFSETS

QUAN	STATION	OFFSET
1	157+60.87	8'-4 RT
2	157+67.99	68'-4 RT
3	158+03.99	68'-4 RT
4	161+31.45	8'-4 RT
5	161+95.86	68'-4 RT
6	162+30.42	68'-4 RT

EB LIGHT PILASTER LOCATIONS

QUAN	STATION	OFFSET
A	158+26.07	67'-0 RT
B	159+80.74	67'-0 RT
C	161+35.40	67'-0 RT

GENERAL NOTES

FINISH

THE FABRICATED RAILING AND HARDWARE (EXCEPT EMBED ANCHORS) SHALL BE GALVANIZED PER C&MS 711.02 EXCEPT THAT FABRICATED RAILING ELEMENTS SHALL NOT BE POST TREATED WITH WATER QUENCHING OR CHROMATE CONVERSION COATED.

ALL VENT HOLES REQUIRED FOR GALVANIZING SHALL BE AT THE DISCRETION OF THE FABRICATOR AND GALVANIZER.

THE PAINT SYSTEM SHALL BE PROVIDED UNDER A SEPARATE COVER. THE FINISH COAT SHALL MATCH FEDERAL COLOR STANDARD FS 595C-17038 BLACK.

WELDING

AWS - BRIDGE WELDING CODE D1.5 - LATEST EDITION

AWS - STRUCTURAL WELDING CODE D1.1 - LATEST EDITION

WELD PROCESS SHALL BE GMAW

RAILING NOTES

1. ALL POSTS SHALL BE FABRICATED AND SET PLUMB TO GRADE AND ALL RAIL PANELS SHALL FOLLOW THE GRADE.
2. ALL EMBEDDED ANCHORS SHALL BE INSTALLED WITH A TOLERANCE OF +/- 1/16".
3. ALL TEMPLATE PLATES FOR THE ANCHORS SHALL NOT BE SUPPLIED BY THIS FABRICATOR. THE CONTRACTOR SHALL BE RESPONSIBLE TO INSTALL THE ANCHORS WITH THE PRECISION REQUIRED FOR POST INSTALLATION.
4. ALL PLASTIC BASE & SHIMS AND CAULKING SHALL NOT BE SUPPLIED BY THIS FABRICATOR. THE CONTRACTOR OR INSTALLER SHALL BE REQUIRED TO SUPPLY AND INSTALL THESE REQUIREMENTS PER THE CONTRACT.

WIRE MESH NOTES

1. THE WELDED WIRE MESH SHALL BE 10.5 GA CORE WIRE, GALVANIZED AFTER WELDING.
2. THE WIRE MESH PATTERN SHALL BE 1x1 SET IN THE SQUARE POSITION AS PLUMB.
3. THE WIRE MESH PANELS SHALL BE FIELD INSTALLED USING CLAMP BARS.
4. THE CLAMP BARS SHALL BE SHOP DRILLED FOR FASTENER LOCATIONS.
5. FIELD INSTALLATION SHALL USE THE 1/4" SELF DRILL AND TAP SCREWS.
6. THE TEK SCREW HEADS SHALL BE FIELD PAINTED BLACK AFTER INSTALLATION.

MATERIAL NOTES

NO	MATERIAL	ASTM	GRADE	TYPE	NOTES
1	PLATES, ANGLES & BARS	A709	36 / 50		
2	HSS RAIL TUBES	A500	B		
3	WIRE MESH	A185-1064			

FASTENER NOTES

NO	MATERIAL	ASTM/ANSI	GRADE	TYPE	REMARKS
1	HIGH STRENGTH BOLTS	A325			GALV ASTM A153
2	HIGH STRENGTH NUTS	A563			GALV ASTM A153
3	HIGH STRENGTH WASHERS	F436			GALV ASTM A153
4	SS ALL THREAD ANCHOR RODS	A320	B8	304	MILL FINISH
5	SS HEX BOLTS	A194	B8	304	MILL FINISH
6	SS HEX NUTS	A194	B8	304	MILL FINISH
7	SS WASHERS	A194	B8	304	MILL FINISH

MATERIAL QUANTITY

DESCRIPTION	POSTS	CONTRACT LN/FT	ACTUAL LN/FT	REMARKS
BU-19 DECORATIVE FENCE OH-10 WB	203	922'-0	929'-5 5/8	+7'-5 5/8
BU-19 DECORATIVE FENCE OH-10 EB	183	820'-0	824'-7 13/16	+4'-7 13/16
BU-19 DECORATIVE FENCE OH-10 TOTALS	386	1742'-0	1754'-1 7/16	+12'-1 7/16

BU-19 BLUE-GREEN LINES
100% COMPLETE 08-16-21

P.H. DREW INC.
2450 N. RACEWAY RD. - P.O. BOX 34295
INDIANAPOLIS, INDIANA 46234
PHONE : (317) 297-5152
FAX : (317) 297-5313

APPROVAL
APPROVED 08-03-21

CUY-IR490 / SR010-2.09 / 19.28
DECORATIVE FENCE
GENERAL PLANS & NOTES

REVISION

REV	DATE	DESCRIPTION	BY

APPROVAL RECORD

DATE	ISSUED	APP. DATE	APPROVAL STATUS
04-22-21	APPROVAL	05-12-21	RESUBMIT
05-26-21	APPROVAL	08-03-21	APPROVED
08-16-21	FABRICATION		

STATE	OHIO
COUNTY	CUYAHOGA (CITY OF CLEVELAND)
PROJECT	3000 (17)
CONTRACT	PID 96833
SECTION	
STRUCTURE	
STATE JOB	
CUSTOMER	LAKE ERIE CONSTRUCTION COMPANY
CONTRACTOR	
ARCH/ENG	
REFERENCE	
ITEM	
FINISH	SEE NOTES-SHT E400

DRAWN BY	CHECKED BY	MRH NO	JOB MGR	DWG STATUS	JOB NO.	TOTAL SHEETS	SHEET
MRH 12-14-20	SRF 08-12-21	1914	JL	FABRICATION 08-16-21	19-1108		E400

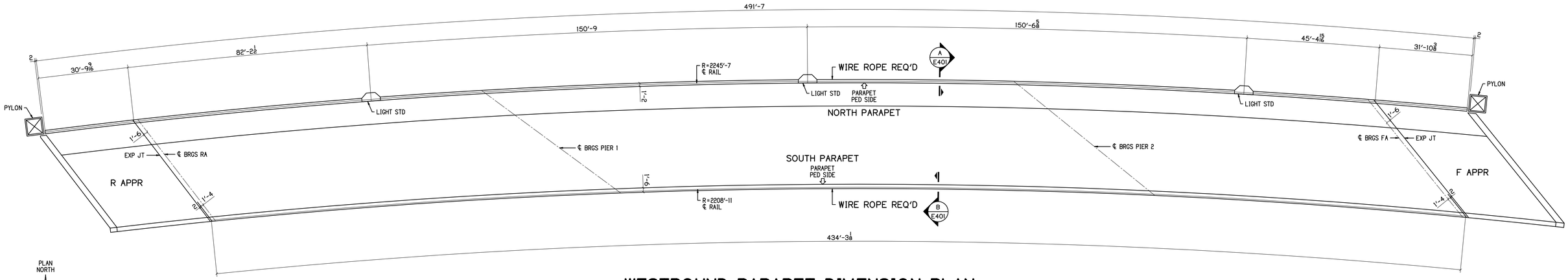

WESTBOUND PARAPET DIMENSION PLAN

ALL DIMENSIONS TAKEN FROM ℄ RAIL
SCALE 1/16" = 1'-0

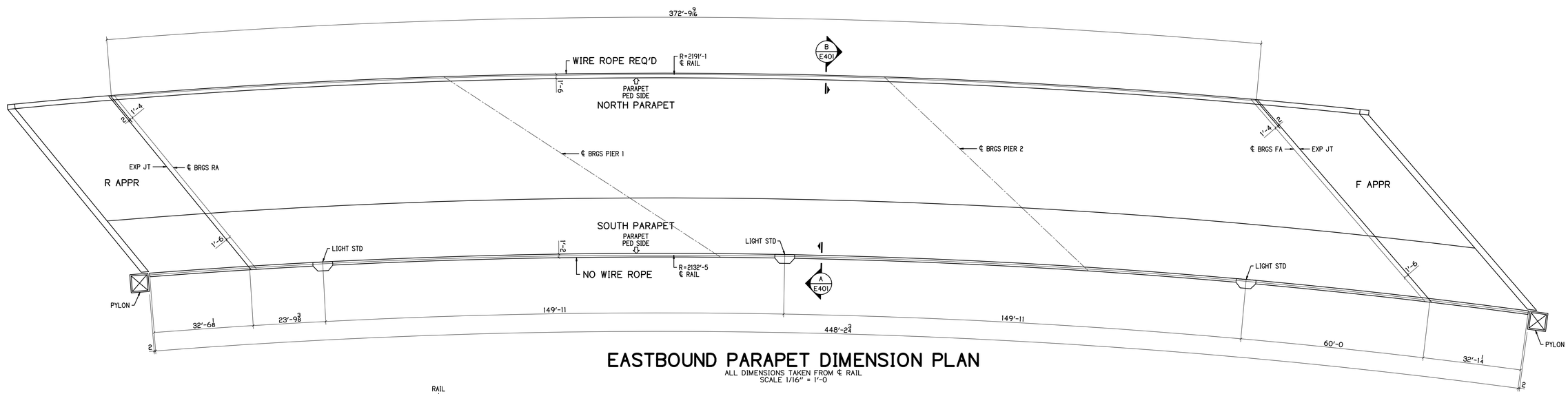

EASTBOUND PARAPET DIMENSION PLAN

ALL DIMENSIONS TAKEN FROM ℄ RAIL
SCALE 1/16" = 1'-0

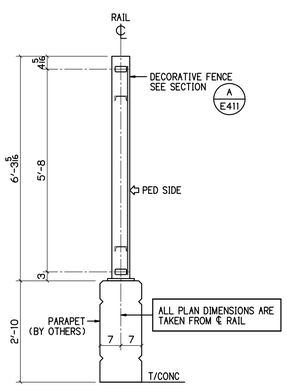

SECTION A E401
1/2" = 1'-0

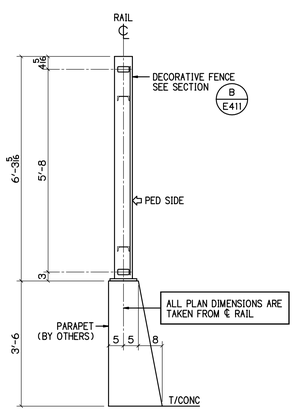

SECTION B E401
1/2" = 1'-0

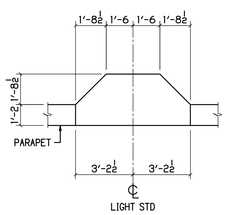

LIGHT STD DETAIL

BU-19 BLUE-GREEN LINES
100% COMPLETE 08-16-21

P.H. DREW INC.
2450 N. RACEWAY RD. - P.O. BOX 34295
INDIANAPOLIS, INDIANA 46234
PHONE : (317) 297-5152
FAX : (317) 297-5313

APPROVAL: APPROVED 08-03-21

CUY-IR490 / SR010-2.09 / 19.28

DECORATIVE FENCE

PARAPET DIMENSION PLANS

REVISION

REV	DATE	DESCRIPTION	BY

APPROVAL RECORD

DATE	ISSUED	APP DATE	APPROVAL STATUS
04-22-21	APPROVAL	05-12-21	RESUBMIT
05-26-21	APPROVAL	08-03-21	APPROVED
08-16-21	FABRICATION		

STATE	OHIO
COUNTY	CUYAHOGA (CITY OF CLEVELAND)
PROJECT	3000 (17)
CONTRACT	PID 96833
SECTION	
STRUCTURE	
STATE JOB	
CUSTOMER	LAKE ERIE CONSTRUCTION COMPANY
CONTRACTOR	
ARCH/ENG	
REFERENCE	
ITEM	
FINISH	SEE NOTES - SHT E400

DRAWN BY	CHECKED BY	MRH NO	JOB MGR	DWG STATUS	JOB NO.	TOTAL SHEETS	SHEET
MRH 12-14-20	SRF 08-12-21	1914	JL	FABRICATION 08-16-21	19-1108		E401

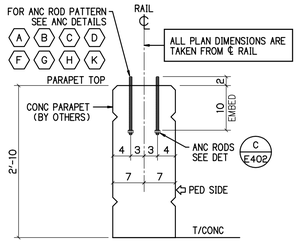

SECTION A E402

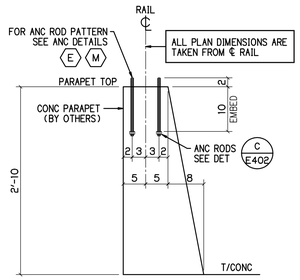

SECTION B E402

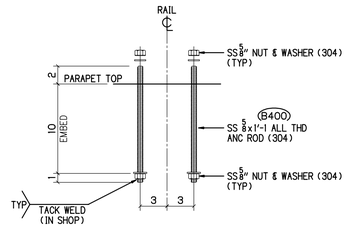

DETAIL C E402

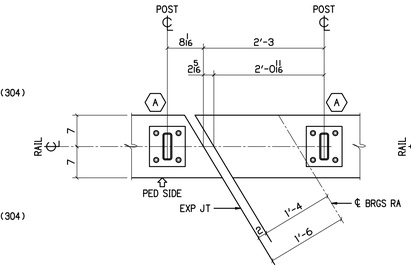

DETAIL D E402
3/4" = 1'-0

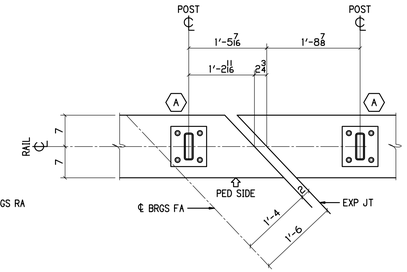

DETAIL E E402
3/4" = 1'-0

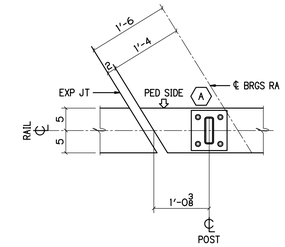

DETAIL F E402
3/4" = 1'-0

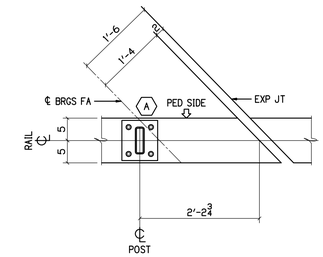

DETAIL G E402
3/4" = 1'-0

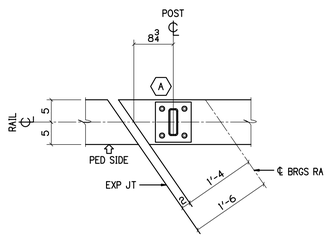

DETAIL H E402
3/4" = 1'-0

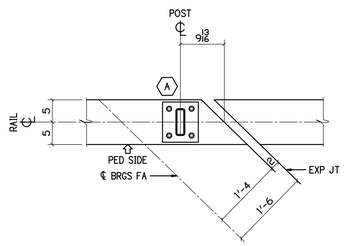

DETAIL K E402
3/4" = 1'-0

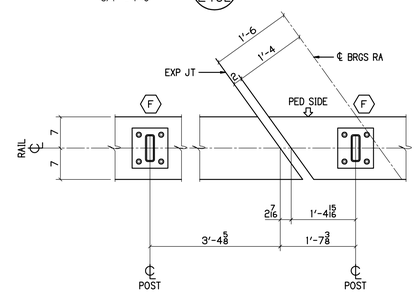

DETAIL M E402
3/4" = 1'-0

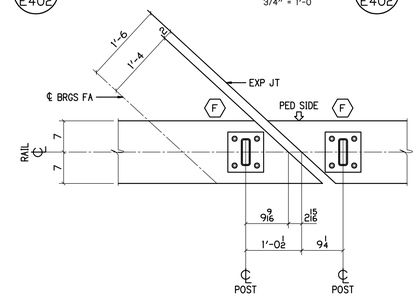

DETAIL N E402
3/4" = 1'-0

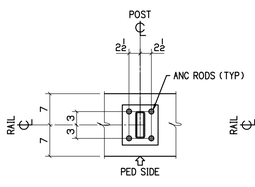

ANC DETAIL A

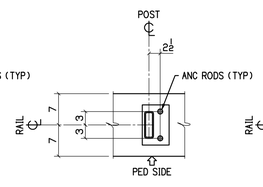

ANC DETAIL B

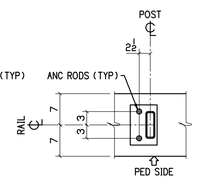

ANC DETAIL C

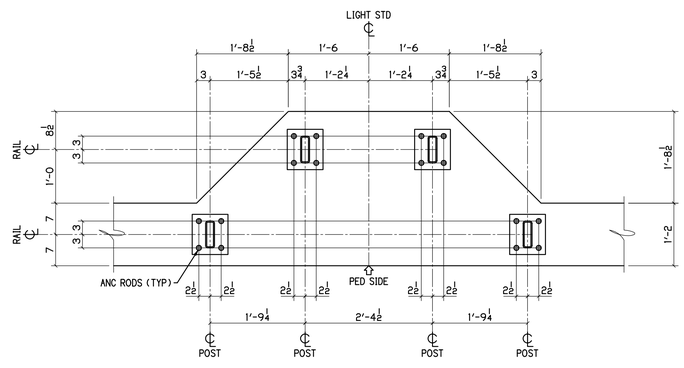

ANC DETAIL D

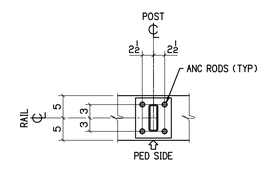

ANC DETAIL E

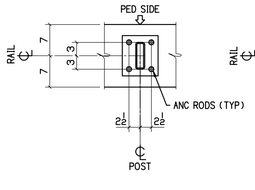

ANC DETAIL F

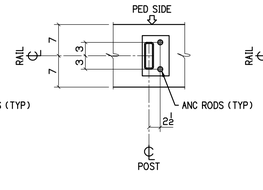

ANC DETAIL G

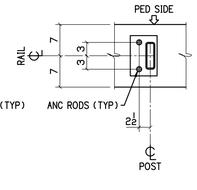

ANC DETAIL H

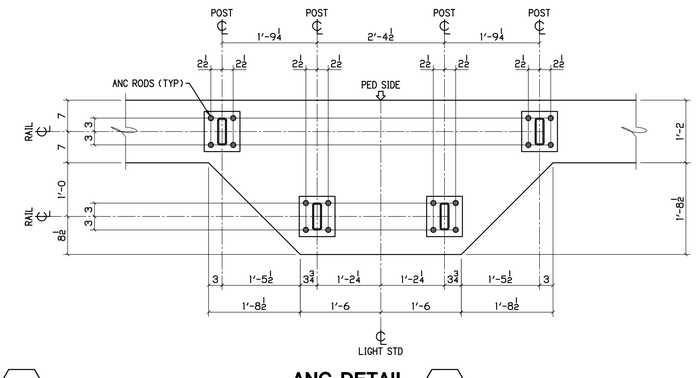

ANC DETAIL K

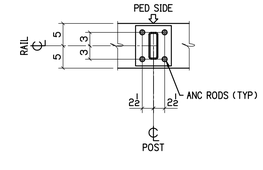

ANC DETAIL M

BU-19 BLUE-GREEN LINES
100% COMPLETE 08-16-21

P.H. DREW INC.
2450 N. RACEWAY RD. - P.O. BOX 34295
INDIANAPOLIS, INDIANA 46234
PHONE : (317) 297-5152
FAX : (317) 297-5313

APPROVAL: APPROVED 08-03-21

CUY-IR490 / SR010-2.09 / 19.28

DECORATIVE FENCE

ANC ROD SECTIONS & DETAILS

REVISION

REV	DATE	DESCRIPTION	BY

APPROVAL RECORD

DATE	ISSUED	APP DATE	APPROVAL STATUS
04-22-21	APPROVAL	05-12-21	RESUBMIT
05-26-21	APPROVAL	08-03-21	APPROVED
08-16-21	FABRICATION		

STATE	OHIO
COUNTY	CUYAHOGA (CITY OF CLEVELAND)
PROJECT	3000 (17)
CONTRACT	PID 96833
SECTION	
STRUCTURE	
STATE JOB	
CUSTOMER	LAKE ERIE CONSTRUCTION COMPANY
CONTRACTOR	
ARCH/ENG	
REFERENCE	
ITEM	
FINISH	SEE NOTES-SHT E400

DRAWN BY	CHECKED BY	MRH NO	JOB MGR	DWG STATUS	JOB NO.	TOTAL SHEETS	SHEET
MRH 12-14-20	SRF 08-12-21	1914	JL	FABRICATION 08-16-21	19-1108		E402

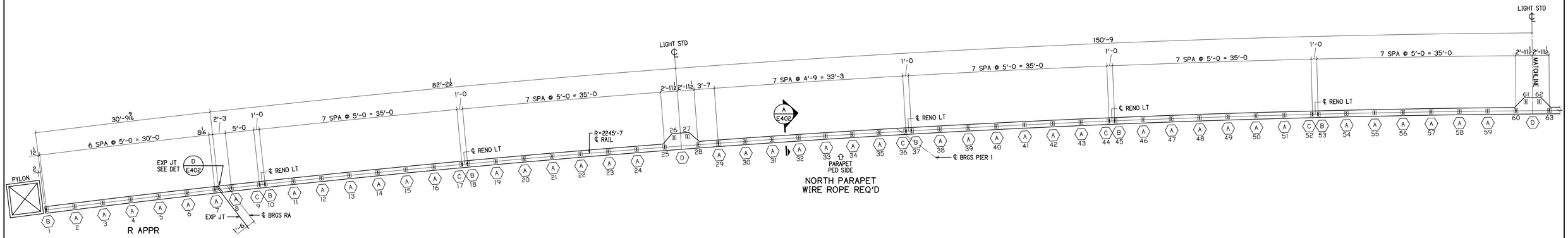

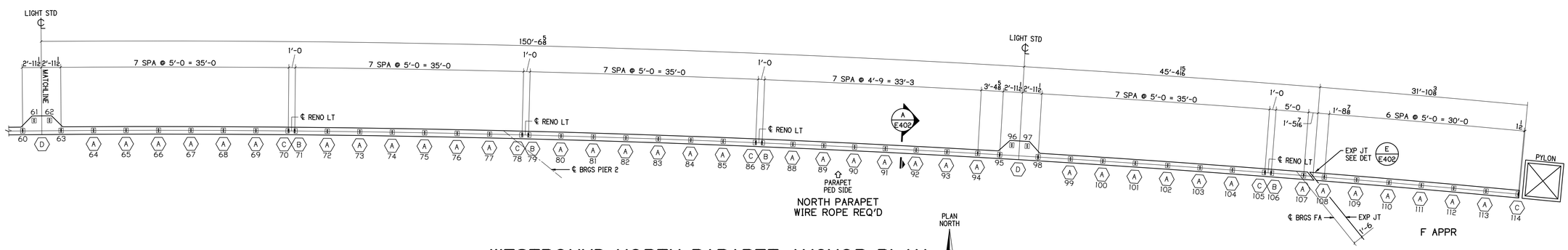

WESTBOUND NORTH PARAPET ANCHOR PLAN

ALL DIMENSIONS TAKEN FROM ℄ RAIL
SCALE 1/8" = 1'-0

SEE SHEET E402 FOR ANC ROD DETAILS

PLAN NORTH

DIMENSION NOTES

1. ALL DIMENSIONS SHOWN ARE TAKEN FROM THE CENTERLINE OF RAIL & PARAPET.
2. ALL DIMENSIONS SHOWN ARE IN PLAN ONLY.
3. SEE SHEET E402 FOR ANCHOR DETAILS.

LEGEND

(X) ANCHOR SETTING DETAIL

X POST NUMBER

BU-19 BLUE-GREEN LINES
100% COMPLETE 08-16-21

P.H. DREW INC.
2450 N. RACEWAY RD. - P.O. BOX 34295
INDIANAPOLIS, INDIANA 46234
PHONE : (317) 297-5152
FAX : (317) 297-5313

APPROVAL: APPROVED 08-03-21

CUY-IR490 / SR010-2.09 / 19.28

DECORATIVE FENCE

ANCHOR SETTING PLAN WB NORTH PARAPET

REVISION

REV	DATE	DESCRIPTION	BY

APPROVAL RECORD

DATE	ISSUED	APP DATE	APPROVAL STATUS
04-22-21	APPROVAL	05-12-21	RESUBMIT
05-26-21	APPROVAL	08-03-21	APPROVED
08-16-21	FABRICATION		

STATE	OHIO
COUNTY	CUYAHOGA (CITY OF CLEVELAND)
PROJECT	3000 (17)
CONTRACT	PID 96833
SECTION	
STRUCTURE	
STATE JOB	
CUSTOMER	LAKE ERIE CONSTRUCTION COMPANY
CONTRACTOR	
ARCH/ENG	
REFERENCE	
ITEM	
FINISH	SEE NOTES-SHT E400

DRAWN BY	CHECKED BY	MRH NO	JOB MGR	DWG STATUS	JOB NO.	TOTAL SHEETS	SHEET
MRH 12-14-20	SRF 08-12-21	1914	JL	FABRICATION 08-16-21	19-1108		E403

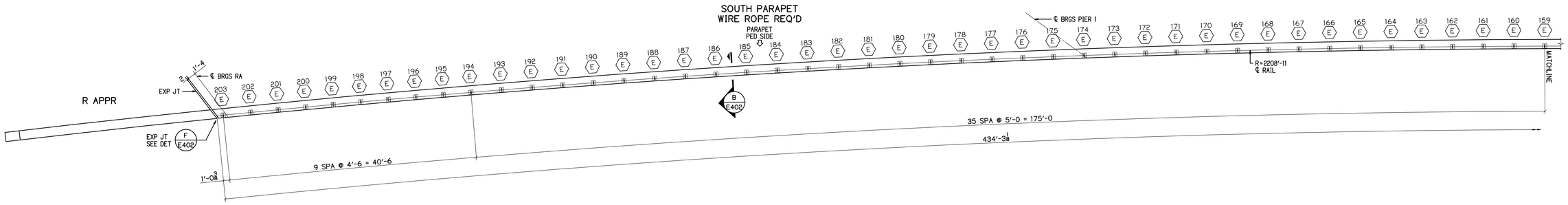

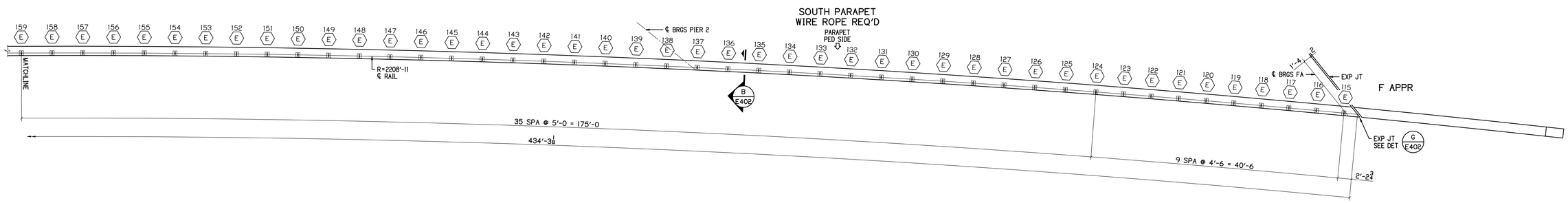

WESTBOUND SOUTH PARAPET ANCHOR PLAN

ALL DIMENSIONS TAKEN FROM ℄ RAIL
SCALE 1/8" = 1'-0

PLAN NORTH

SEE SHEET E402 FOR ANC ROD DETAILS

DIMENSION NOTES

1. ALL DIMENSIONS SHOWN ARE TAKEN FROM THE CENTERLINE OF RAIL & PARAPET.
2. ALL DIMENSIONS SHOWN ARE IN PLAN ONLY.
3. SEE SHEET E402 FOR ANCHOR DETAILS.

LEGEND

(X) ANCHOR SETTING DETAIL

X POST NUMBER

BU-19 BLUE-GREEN LINES
100% COMPLETE 08-16-21

P.H. DREW INC.
2450 N. RACEWAY RD. - P.O. BOX 34295
INDIANAPOLIS, INDIANA 46234
PHONE : (317) 297-5152
FAX : (317) 297-5313

APPROVAL
APPROVED 08-03-21

CUY-IR490 / SR010-2.09 / 19.28
DECORATIVE FENCE
ANCHOR SETTING PLAN WB SOUTH PARAPET

REVISION

REV	DATE	DESCRIPTION	BY

APPROVAL RECORD

DATE	ISSUED	APP DATE	APPROVAL STATUS
04-22-21	APPROVAL	05-12-21	RESUBMIT
05-26-21	APPROVAL	08-03-21	APPROVED
08-16-21	FABRICATION		

STATE	OHIO
COUNTY	CUYAHOGA (CITY OF CLEVELAND)
PROJECT	3000 (17)
CONTRACT	PID 96833
SECTION	
STRUCTURE	
STATE JOB	
CUSTOMER	LAKE ERIE CONSTRUCTION COMPANY
CONTRACTOR	
ARCH/ENG	
REFERENCE	
ITEM	
FINISH	SEE NOTES-SHT E400

DRAWN BY	CHECKED BY	MRH NO	JOB MGR	DWG STATUS	JOB NO.	TOTAL SHEETS	SHEET
MRH 12-14-20	SRF 08-12-21	1914	JL	FABRICATION 08-16-21	19-1108		E404

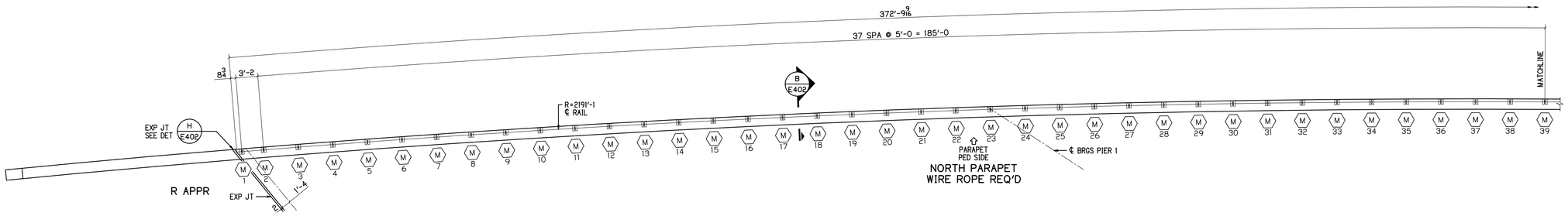

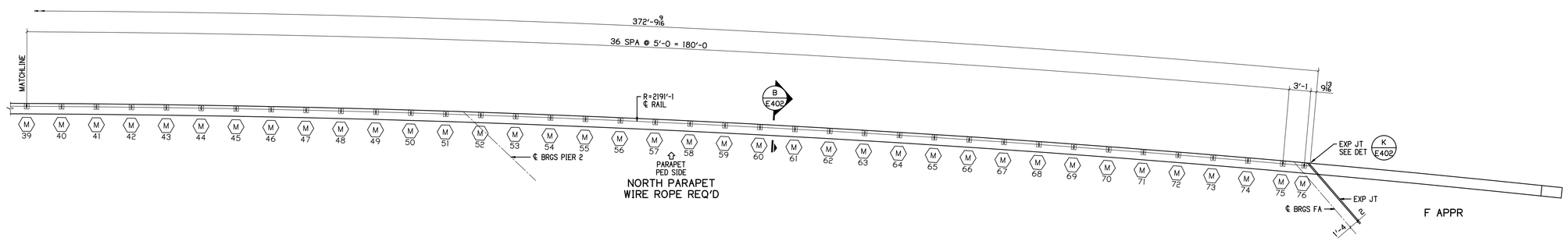

EASTBOUND NORTH PARAPET ANCHOR PLAN

ALL DIMENSIONS TAKEN FROM ℄ RAIL
SCALE 1/8" = 1'-0

SEE SHEET E402 FOR ANC ROD DETAILS

PLAN NORTH

DIMENSION NOTES

1. ALL DIMENSIONS SHOWN ARE TAKEN FROM THE CENTERLINE OF RAIL & PARAPET.
2. ALL DIMENSIONS SHOWN ARE IN PLAN ONLY.
3. SEE SHEET E402 FOR ANCHOR DETAILS.

LEGEND

(X) ANCHOR SETTING DETAIL

X POST NUMBER

BU-19 BLUE-GREEN LINES
100% COMPLETE 08-16-21

P.H. DREW INC.
2450 N. RACEWAY RD. - P.O. BOX 34295
INDIANAPOLIS, INDIANA 46234
PHONE : (317) 297-5152
FAX : (317) 297-5313

APPROVAL
APPROVED 08-03-21

CUY-IR490 / SR010-2.09 / 19.28
DECORATIVE FENCE
ANCHOR SETTING PLAN EB NORTH PARAPET

REVISION

REV	DATE	DESCRIPTION	BY

STATE	OHIO
COUNTY	CUYAHOGA (CITY OF CLEVELAND)
PROJECT	3000 (17)
CONTRACT	PID 96833
SECTION	
STRUCTURE	
STATE JOB	

APPROVAL RECORD

DATE	ISSUED	APP DATE	APPROVAL STATUS
04-22-21	APPROVAL	05-12-21	RESUBMIT
05-26-21	APPROVAL	08-03-21	APPROVED
08-16-21	FABRICATION		

CUSTOMER	LAKE ERIE CONSTRUCTION COMPANY
CONTRACTOR	
ARCH/ENG	
REFERENCE	
ITEM	
FINISH	SEE NOTES - SHT E400

DRAWN BY	CHECKED BY	MRH NO	JOB MGR	DWG STATUS	JOB NO.	TOTAL SHEETS	SHEET
MRH 12-14-20	SRF 08-12-21	1914	JL	FABRICATION 08-16-21	19-1108		E405

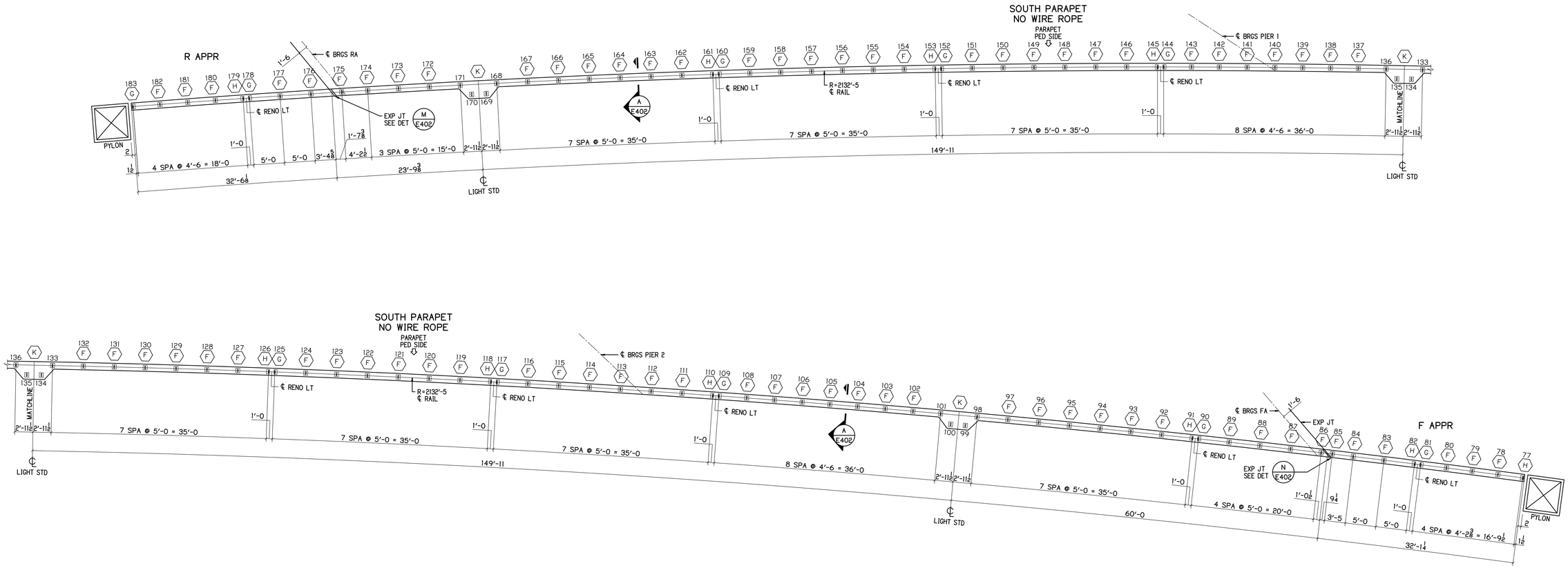

EASTBOUND SOUTH PARAPET ANCHOR PLAN

ALL DIMENSIONS TAKEN FROM ℄ RAIL
SCALE 1/8" = 1'-0

SEE SHEET E402 FOR ANC ROD DETAILS

PLAN NORTH

DIMENSION NOTES

1. ALL DIMENSIONS SHOWN ARE TAKEN FROM THE CENTERLINE OF RAIL & PARAPET.
2. ALL DIMENSIONS SHOWN ARE IN PLAN ONLY.
3. SEE SHEET E402 FOR ANCHOR DETAILS.

LEGEND

(X) ANCHOR SETTING DETAIL

X POST NUMBER

BU-19 BLUE-GREEN LINES
100% COMPLETE 08-16-21

P.H. DREW INC.
2450 N. RACEWAY RD. - P.O. BOX 34295
INDIANAPOLIS, INDIANA 46234
PHONE : (317) 297-5152
FAX : (317) 297-5313

APPROVAL
APPROVED 08-03-21

CUY-IR490 / SR010-2.09 / 19.28
DECORATIVE FENCE
ANCHOR SETTING PLAN EB SOUTH PARAPET

REVISION

REV	DATE	DESCRIPTION	BY
1	03-10-21	REV PER RFI ANSWERS	MRH

APPROVAL RECORD

DATE	ISSUED	APP DATE	APPROVAL STATUS
04-22-21	APPROVAL	05-12-21	RESUBMIT
05-26-21	APPROVAL	06-03-21	APPROVED
08-16-21	FABRICATION		

STATE	OHIO
COUNTY	CUYAHOGA (CITY OF CLEVELAND)
PROJECT	3000 (17)
CONTRACT	PID 96833
SECTION	
STRUCTURE	
STATE JOB	
CUSTOMER	LAKE ERIE CONSTRUCTION COMPANY
CONTRACTOR	
ARCH/ENG	
REFERENCE	
ITEM	
FINISH	SEE NOTES-SHT E400

DRAWN BY	CHECKED BY	MRH NO	JOB MGR	DWG STATUS	JOB NO.	TOTAL SHEETS	SHEET
MRH 12-14-20	SRF 08-12-21	1914	JL	FABRICATION 08-16-21	19-1108		E406

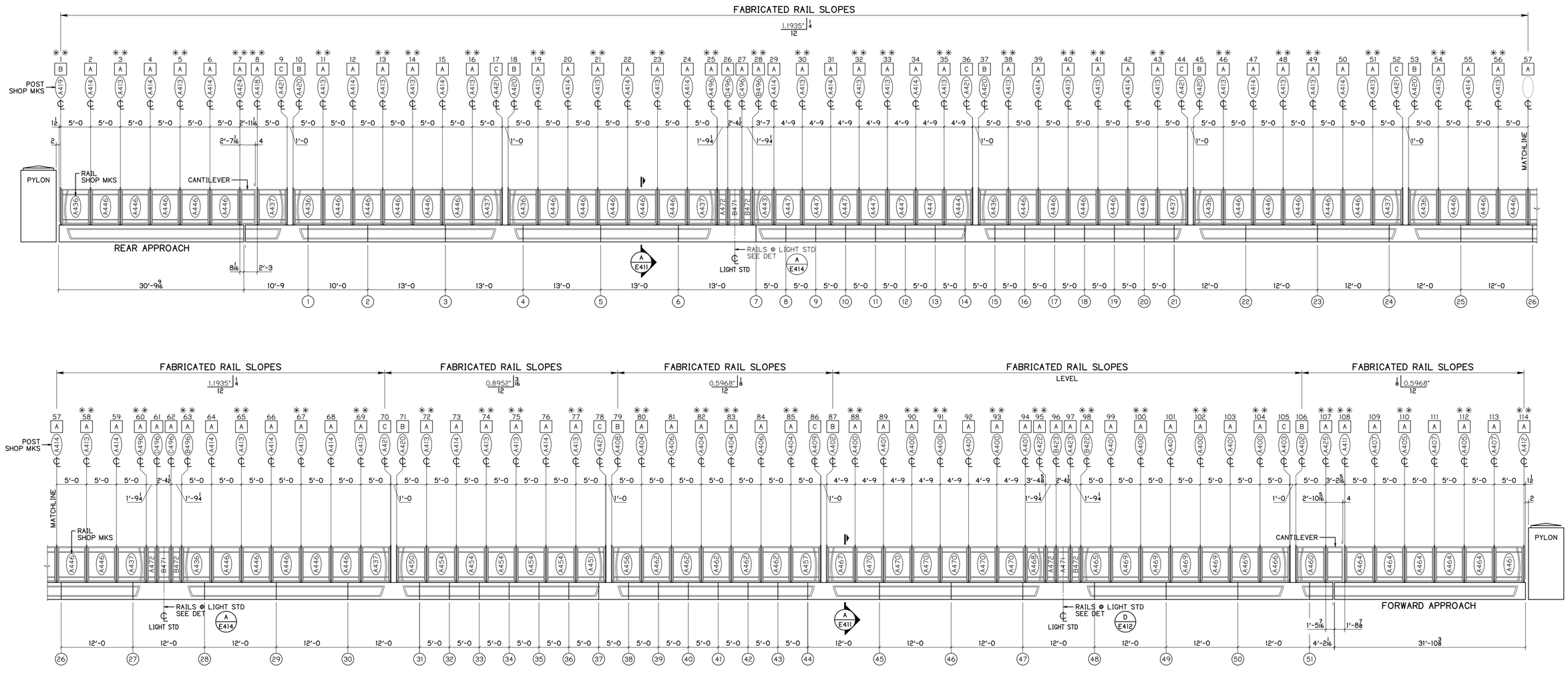

WESTBOUND NORTH PARAPET RAIL ELEVATION

PEDESTRIAN SIDE SHOWN
WIRE ROPE SYSTEM ON FAR SIDE

POST COUNT

QUAN	MARK	QUAN	MARK	QUAN	MARK
7	A400	1	A411	1	A423
6	A401	1	A412	1	B423
2	A402	31	A413	1	A424
1	A403	23	A414	1	A425
4	A404	1	A418	2	A496
2	A405	1	A419	2	B496
2	A406	6	A420	2	C496
3	A407	7	A421	2	D496
1	A408	1	A422		
1	A409	1	B422		

RAIL COUNT

QUAN	MARK	QUAN	MARK	QUAN	MARK
7	A436	1	A457	6	A470
7	A437	1	A460	1	A471
1	A443	1	A461	2	B471
1	A444	5	A462	3	A472
35	A446	5	A464	3	B472
6	A447	1	A465		
1	A450	1	A466		
1	A451	1	A467		
5	A454	1	A468		
1	A456	5	A469		

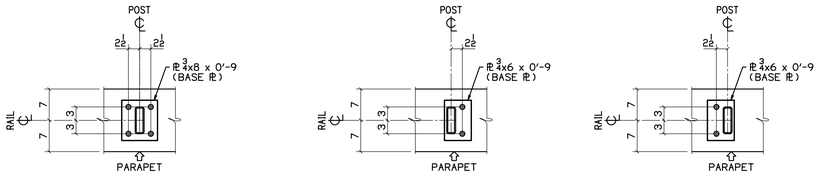

BASE PL DETAIL A

BASE PL DETAIL B

BASE PL DETAIL C

RAILING NOTES

1. TRANSITION POSTS & RAILS SHALL BE USED NEAR PYLONS TO ALLOW THE AESTHETIC ALINMENT OF PLUMB POSTS WITH A PLUMB PYLON.

WIRE MESH NOTES

1. SEE SHOP DRAWINGS FOR WIRE MESH & CLAMP BAR INSTALLATION.

DIMENSION NOTES

1. ALL DIMENSIONS SHOWN ARE TAKEN FROM THE CENTERLINE OF RAIL.
2. ALL DIMENSIONS SHOWN ARE IN PLAN ONLY.
3. SEE SHEET E402 FOR ANCHOR DETAILS.

LEGEND

[X] BASE PL DETAIL

(X) CONTR OR EXP JOINT NUMBER

X POST NUMBER

✳✳ POST WITH DEAD END CABLE CONNECTION

BU-19 BLUE-GREEN LINES
100% COMPLETE 08-16-21

P.H. DREW INC.
2450 N. RACEWAY RD. - P.O. BOX 34295
INDIANAPOLIS, INDIANA 46234
PHONE : (317) 297-5152
FAX : (317) 297-5313

APPROVAL: APPROVED 08-03-21

CUY-IR490 / SR010-2.09 / 19.28

DECORATIVE FENCE

WESTBOUND NORTH PARAPET RAIL ELEVATION

REVISION

REV	DATE	DESCRIPTION	BY

APPROVAL RECORD

DATE	ISSUED	APP DATE	APPROVAL STATUS
04-22-21	APPROVAL	05-12-21	RESUBMIT
05-26-21	APPROVAL	08-03-21	APPROVED
08-16-21	FABRICATION		

STATE	OHIO
COUNTY	CUYAHOGA (CITY OF CLEVELAND)
PROJECT	3000 (17)
CONTRACT	PID 96833
SECTION	
STRUCTURE	
STATE JOB	
CUSTOMER	LAKE ERIE CONSTRUCTION COMPANY
CONTRACTOR	
ARCH/ENG	
REFERENCE	
ITEM	
FINISH	SEE NOTES - SHT E400

DRAWN BY	CHECKED BY	MRH NO	JOB MGR	DWG STATUS	JOB NO.	TOTAL SHEETS	SHEET
MRH 04-22-21	SRF 08-12-21	1914	JL	FABRICATION 08-16-21	19-1108		E407

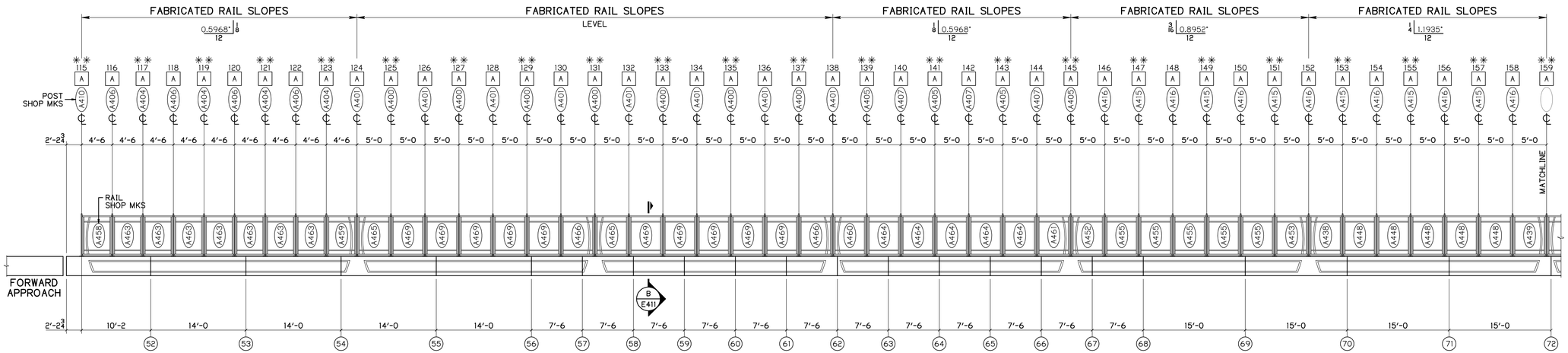

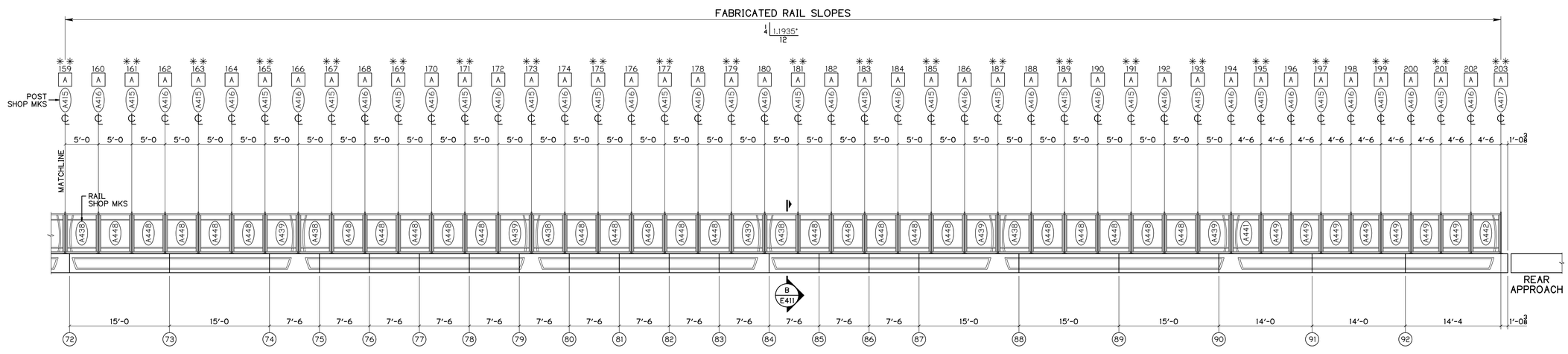

WESTBOUND SOUTH PARAPET RAIL ELEVATION

PEDESTRIAN SIDE SHOWN
WIRE ROPE SYSTEM ON FAR SIDE

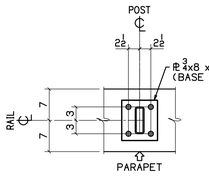

BASE PL DETAIL A

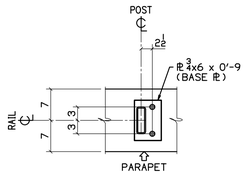

BASE PL DETAIL B

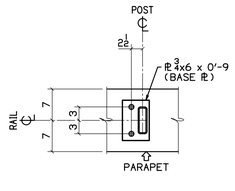

BASE PL DETAIL C

POST COUNT

QUAN	MARK	QUAN	MARK
7	A400	29	A416
8	A401	1	A417
4	A404		
4	A405		
4	A406		
3	A407		
1	A410		
28	A415		

RAIL COUNT

QUAN	MARK	QUAN	MARK	QUAN	MARK
6	A438	5	A455	2	A466
6	A439	1	A458	10	A469
1	A441	1	A459		
1	A442	1	A460		
30	A448	1	A461		
7	A449	7	A463		
1	A452	5	A464		
1	A453	2	A465		

RAILING NOTES

1. ALL POSTS SHALL BE SET NORMAL TO GRADE, PERPENDICULAR.

WIRE MESH NOTES

1. SEE SHOP DRAWINGS FOR WIRE MESH & CLAMP BAR INSTALLATION.

DIMENSION NOTES

1. ALL DIMENSIONS SHOWN ARE TAKEN FROM THE CENTERLINE OF RAIL.
2. ALL DIMENSIONS SHOWN ARE IN PLAN ONLY.
3. SEE SHEET E402 FOR ANCHOR DETAILS.

LEGEND

[X] BASE PL DETAIL

(X) CONTR OR EXP JOINT NUMBER

X POST NUMBER

✳✳ POST WITH DEAD END CABLE CONNECTION

BU-19 BLUE-GREEN LINES
100% COMPLETE 08-16-21

P.H. DREW INC.
2450 N. RACEWAY RD. - P.O. BOX 34295
INDIANAPOLIS, INDIANA 46234
PHONE : (317) 297-5152
FAX : (317) 297-5313

APPROVAL: APPROVED 08-03-21

CUY-IR490 / SR010-2.09 / 19.28
DECORATIVE FENCE
WESTBOUND SOUTH PARAPET RAIL ELEVATION

REVISION	REV	DATE	DESCRIPTION	BY

APPROVAL RECORD	DATE	ISSUED	APP DATE	APPROVAL STATUS
	04-22-21	APPROVAL	05-12-21	RESUBMIT
	05-26-21	APPROVAL	08-03-21	APPROVED
	08-16-21	FABRICATION		

STATE	OHIO
COUNTY	CUYAHOGA (CITY OF CLEVELAND)
PROJECT	3000 (17)
CONTRACT	PID 96833
SECTION	
STRUCTURE	
STATE JOB	
CUSTOMER	LAKE ERIE CONSTRUCTION COMPANY
CONTRACTOR	
ARCH/ENG	
REFERENCE	
ITEM	
FINISH	SEE NOTES - SHT E400

DRAWN BY	CHECKED BY	MRH NO	JOB MGR	DWG STATUS	JOB NO.	TOTAL SHEETS	SHEET
MRH 04-22-21	SRF 08-12-21	1914	JL	FABRICATION 08-16-21	19-1108		E408

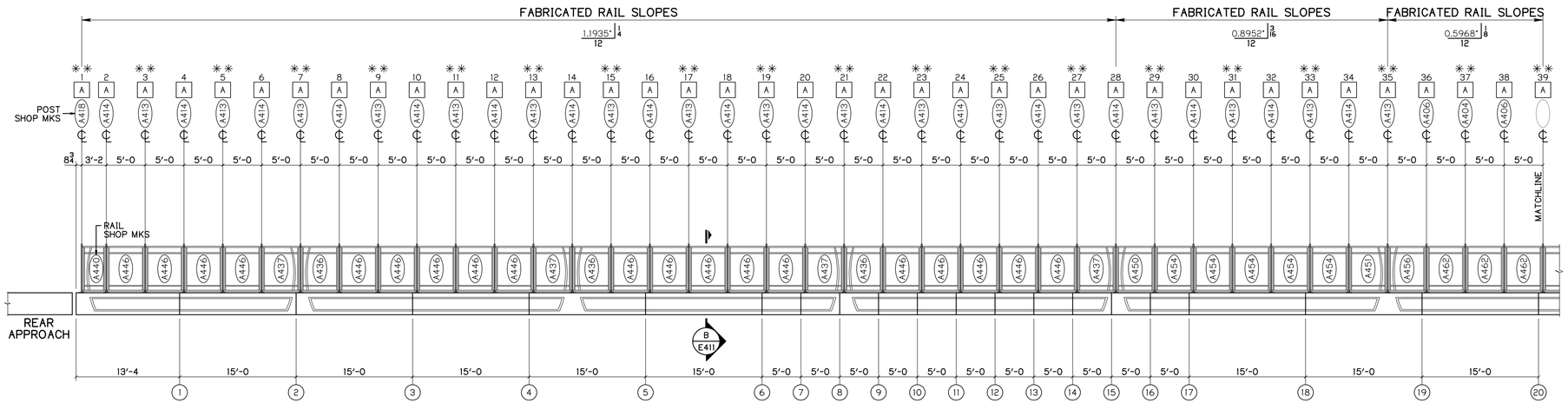

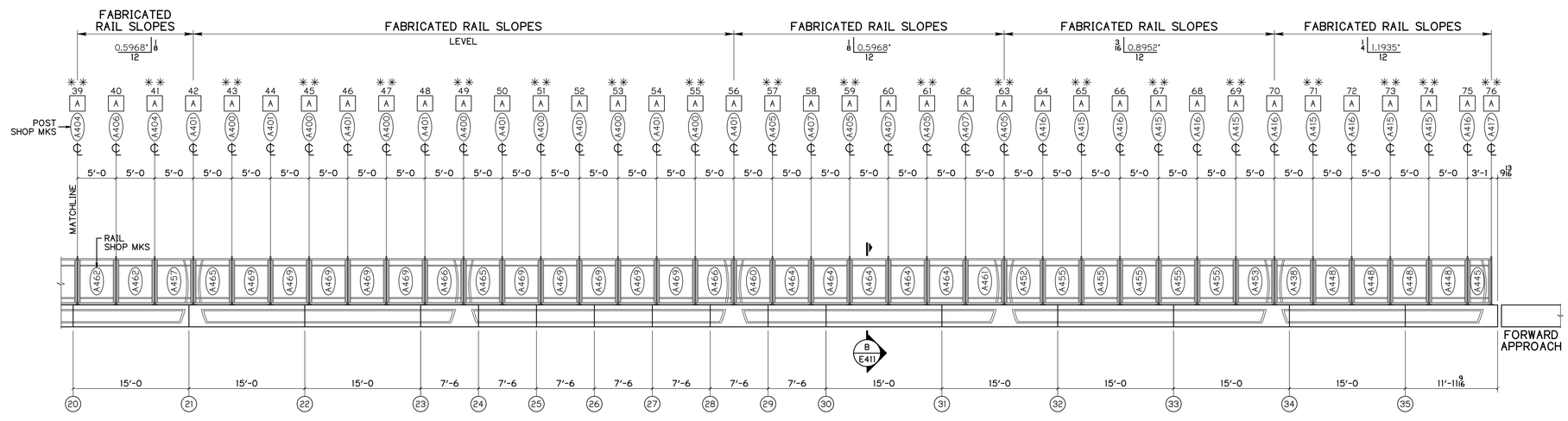

EASTBOUND NORTH PARAPET RAIL ELEVATION

PEDESTRIAN SIDE SHOWN
WIRE ROPE SYSTEM ON FAR SIDE

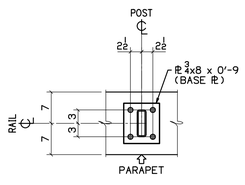

BASE PL DETAIL A

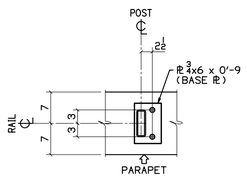

BASE PL DETAIL B

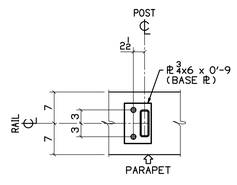

BASE PL DETAIL C

POST COUNT

QUAN	MARK	QUAN	MARK
7	A400	6	A415
8	A401	6	A416
3	A404	1	A417
4	A405	1	A418
3	A406		
3	A407		
17	A413		
17	A414		

RAIL COUNT

QUAN	MARK	QUAN	MARK	QUAN	MARK
3	A436	1	A451	1	A461
4	A437	1	A452	5	A462
1	A438	1	A453	5	A464
1	A440	5	A454	2	A465
1	A445	5	A455	2	A466
19	A446	1	A456	10	A469
4	A448	1	A457		
1	A450	1	A460		

RAILING NOTES

1. ALL POSTS SHALL BE SET NORMAL TO GRADE, PERPENDICULAR.

WIRE MESH NOTES

1. SEE SHOP DRAWINGS FOR WIRE MESH & CLAMP BAR INSTALLATION.

DIMENSION NOTES

1. ALL DIMENSIONS SHOWN ARE TAKEN FROM THE CENTERLINE OF RAIL.
2. ALL DIMENSIONS SHOWN ARE IN PLAN ONLY.
3. SEE SHEET E402 FOR ANCHOR DETAILS.

LEGEND

- [X] BASE PL DETAIL
- (X) CONTR OR EXP JOINT NUMBER
- X POST NUMBER
- ✳✳ POST WITH DEAD END CABLE CONNECTION

BU-19 BLUE-GREEN LINES
100% COMPLETE 08-16-21

P.H. DREW INC.
2450 N. RACEWAY RD. - P.O. BOX 34295
INDIANAPOLIS, INDIANA 46234
PHONE : (317) 297-5152
FAX : (317) 297-5313

APPROVAL: APPROVED 08-03-21

CUY-IR490 / SR010-2.09 / 19.28

DECORATIVE FENCE

EASTBOUND NORTH PARAPET RAIL ELEVATION

REVISION

REV	DATE	DESCRIPTION	BY

APPROVAL RECORD

DATE	ISSUED	APP DATE	APPROVAL STATUS
04-22-21	APPROVAL	05-12-21	RESUBMIT
05-26-21	APPROVAL	08-03-21	APPROVED
08-16-21	FABRICATION		

STATE	OHIO
COUNTY	CUYAHOGA (CITY OF CLEVELAND)
PROJECT	3000 (17)
CONTRACT	PID 96833
SECTION	
STRUCTURE	
STATE JOB	
CUSTOMER	LAKE ERIE CONSTRUCTION COMPANY
CONTRACTOR	
ARCH/ENG	
REFERENCE	
ITEM	
FINISH	SEE NOTES-SHT E400

DRAWN BY	CHECKED BY	MRH NO	JOB MGR	DWG STATUS	JOB NO.	TOTAL SHEETS	SHEET
MRH 04-22-21	SRF 08-12-21	1914	JL	FABRICATION 08-16-21	19-1108		E409

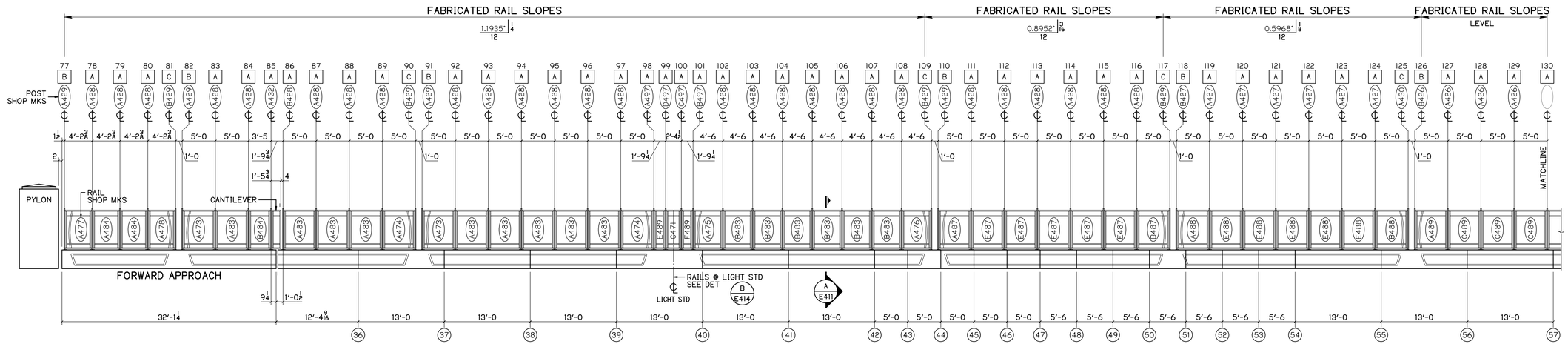

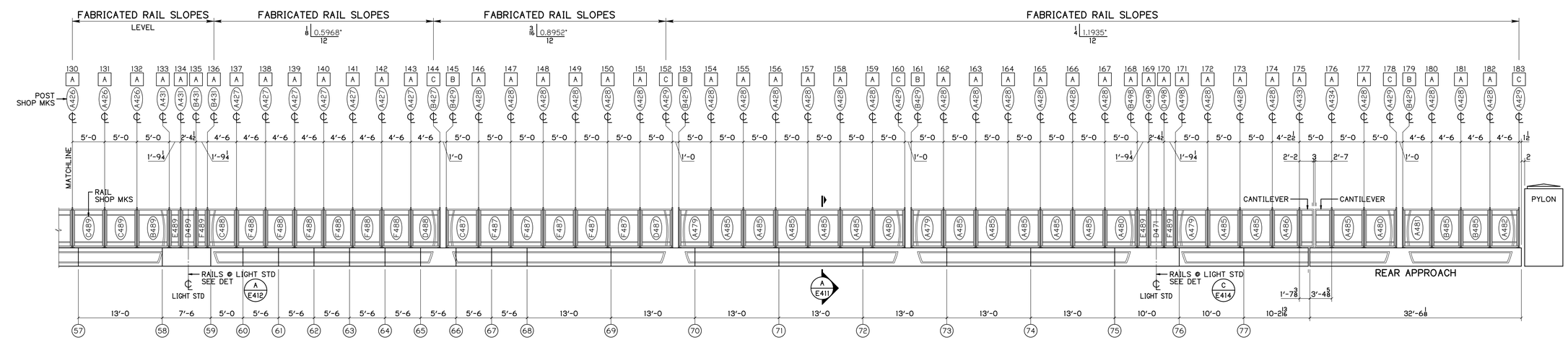

EASTBOUND SOUTH PARAPET RAIL ELEVATION

PEDESTRIAN SIDE SHOWN
NO WIRE ROPE

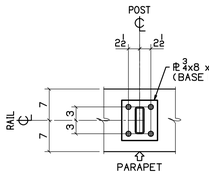

BASE ⅊ DETAIL A

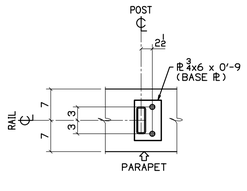

BASE ⅊ DETAIL B

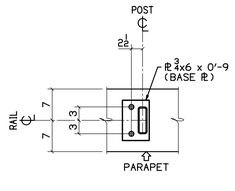

BASE ⅊ DETAIL C

POST COUNT

QUAN	MARK	QUAN	MARK	QUAN	MARK
6	A426	1	A430	1	C497
1	B426	2	A431	1	D497
13	A427	2	B431	1	A498
2	B427	1	A432	1	B498
52	A428	1	A433	1	C498
1	B428	1	A434	1	D498
7	A429	1	A497		
8	B429	1	B497		

RAIL COUNT

QUAN	MARK	QUAN	MARK	QUAN	MARK	QUAN	MARK	QUAN	MARK
2	A473	1	A481	1	A486	1	B488	1	D489
2	A474	1	A482	1	A487	1	C488	3	E489
1	A475	9	A483	1	B487	1	D488	3	F489
1	A476	6	B483	1	C487	5	E488	1	C471
1	A477	2	A484	1	D487	6	F488	1	D471
1	A478	1	B484	5	E487	1	A489		
3	A479	13	A485	5	F487	1	B489		
3	A480	2	B485	1	A488	5	C489		

RAILING NOTES

1. TRANSITION POSTS & RAILS SHALL BE USED NEAR PYLONS TO ALLOW THE AESTHETIC ALINMENT OF PLUMB POSTS WITH A PLUMB PYLON.

WIRE MESH NOTES

1. SEE SHOP DRAWINGS FOR WIRE MESH & CLAMP BAR INSTALLATION.

DIMENSION NOTES

1. ALL DIMENSIONS SHOWN ARE TAKEN FROM THE CENTERLINE OF RAIL.
2. ALL DIMENSIONS SHOWN ARE IN PLAN ONLY.
3. SEE SHEET E402 FOR ANCHOR DETAILS.

LEGEND

[X] BASE ⅊ DETAIL

(X) CONTR OR EXP JOINT NUMBER

X POST NUMBER

BU-19 BLUE-GREEN LINES
100% COMPLETE 08-16-21

P.H. DREW INC.
2450 N. RACEWAY RD. - P.O. BOX 34295
INDIANAPOLIS, INDIANA 46234
PHONE : (317) 297-5152
FAX : (317) 297-5313

APPROVAL: APPROVED 08-03-21

CUY-IR490 / SR010-2.09 / 19.28

DECORATIVE FENCE

EASTBOUND SOUTH PARAPET RAIL ELEVATION

REVISION	REV	DATE	DESCRIPTION	BY

APPROVAL RECORD	DATE	ISSUED	APP DATE	APPROVAL STATUS
	04-22-21	APPROVAL	05-12-21	RESUBMIT
	05-26-21	APPROVAL	08-03-21	APPROVED
	08-16-21	FABRICATION		

STATE	OHIO
COUNTY	CUYAHOGA (CITY OF CLEVELAND)
PROJECT	3000 (17)
CONTRACT	PID 96833
SECTION	
STRUCTURE	
STATE JOB	
CUSTOMER	LAKE ERIE CONSTRUCTION COMPANY
CONTRACTOR	
ARCH/ENG	
REFERENCE	
ITEM	
FINISH	SEE NOTES - SHT E400

DRAWN BY	CHECKED BY	MRH NO	JOB MGR	DWG STATUS	JOB NO.	TOTAL SHEETS	SHEET
MRH 04-22-21	SRF 08-12-21	1914	JL	FABRICATION 08-16-21	19-1108		E410

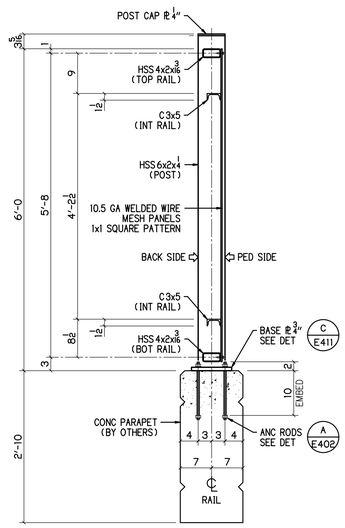

SECTION A E411
3/4" = 1'-0

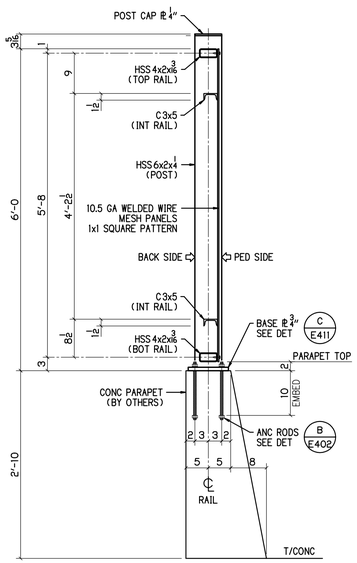

SECTION B E411

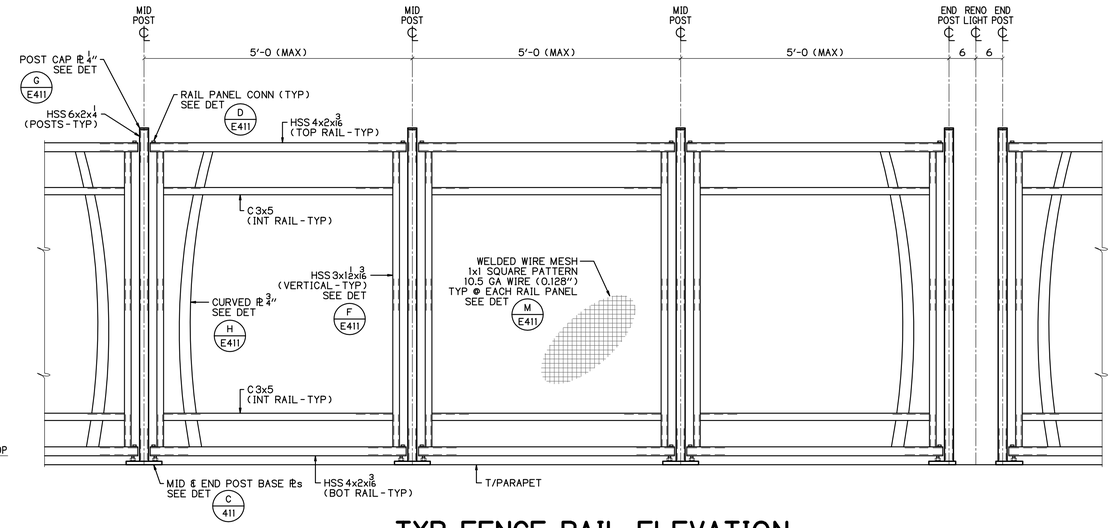

TYP FENCE RAIL ELEVATION

SCHEMATIC ONLY
WIRE MESH NOT SHOWN FOR CLARITY
PEDESTRIAN SIDE SHOWN

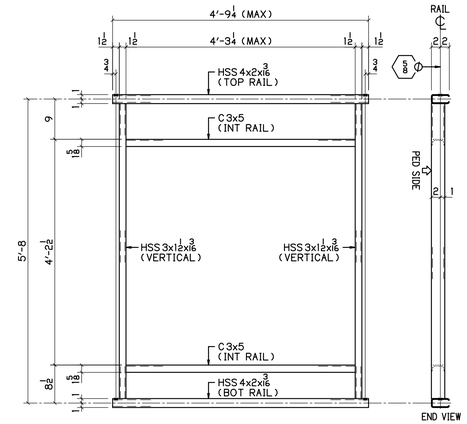

TYP FENCE RAIL DETAIL

LEVEL AND SLIGHT SLOPE
PEDESTRIAN SIDE SHOWN

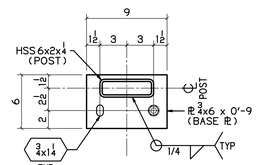

PLAN @ END POSTS

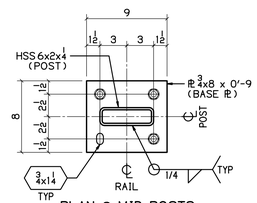

PLAN @ MID POSTS

DETAIL C E411
1 1/2" = 1'-0

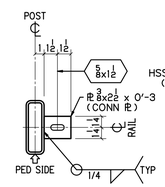

DET SHOWING CONN BAR

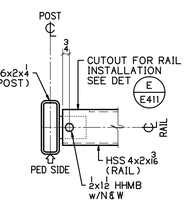

DET SHOWING RAIL CONN

DETAIL D E411
1 1/2" = 1'-0

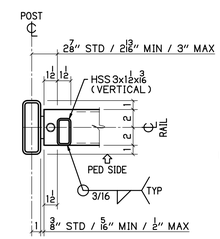

DET SHOWING VERTICAL

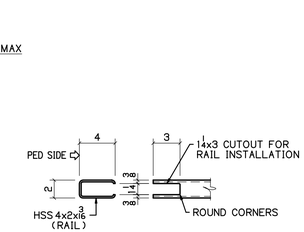

DETAIL E E411
1 1/2" = 1'-0

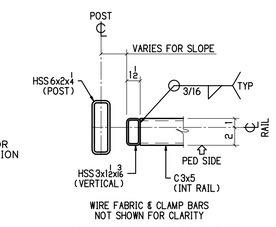

DET SHOWING INT C RAIL

DETAIL F E411
1 1/2" = 1'-0

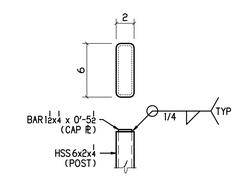

DETAIL G E411
1 1/2" = 1'-0

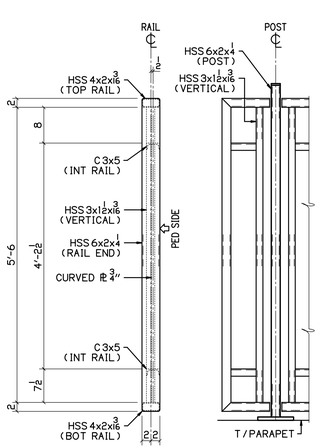

TYP RAIL CANTILEVER

PEDESTRIAN SIDE SHOWN
WIRE MESH
NOT SHOWN FOR CLARITY

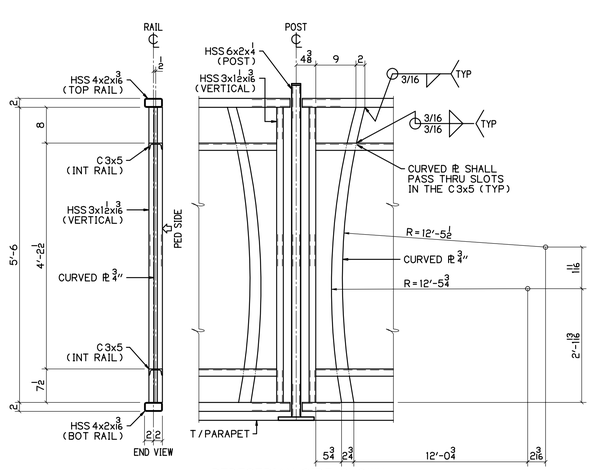

PEDESTRIAN SIDE SHOWN
WIRE MESH
NOT SHOWN FOR CLARITY

DETAIL H E411
3/4" = 1'-0

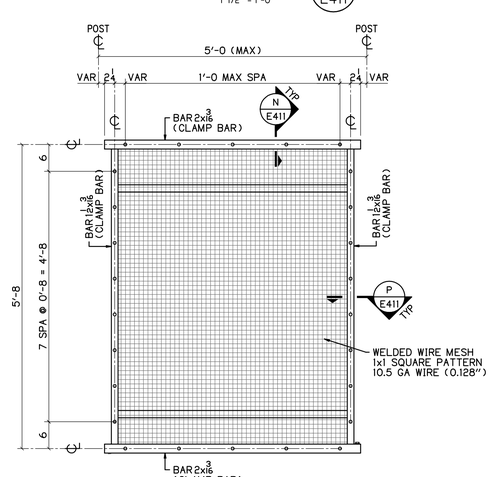

TYP WIRE MESH ELEVATION

PEDESTRIAN SIDE SHOWN
LEVEL SHOWN / SLOPED SIMILAR

DETAIL M E411
3/4" = 1'-0

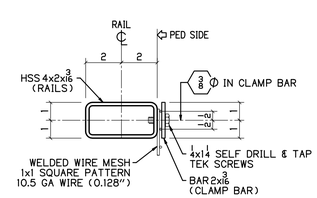

SECTION N E411
3" = 1'-0

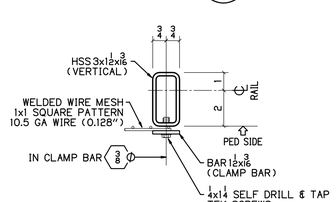

SECTION P E411
3" = 1'-0

BU-19 BLUE-GREEN LINES
100% COMPLETE 08-16-21

P.H. DREW INC.
2450 N. RACEWAY RD. - P.O. BOX 34295
INDIANAPOLIS, INDIANA 46234
PHONE : (317) 297-5152
FAX : (317) 297-5313

APPROVAL: APPROVED 08-03-21

CUY-IR490 / SR010-2.09 / 19.28

DECORATIVE FENCE

RAIL STANDARD DETAILS

REVISION	REV	DATE	DESCRIPTION	BY

APPROVAL RECORD	DATE	ISSUED	APP DATE	APPROVAL STATUS
	04-22-21	APPROVAL	05-12-21	RESUBMIT
	05-26-21	APPROVAL	08-03-21	APPROVED
	08-16-21	FABRICATION		

STATE	OHIO
COUNTY	CUYAHOGA (CITY OF CLEVELAND)
PROJECT	3000 (17)
CONTRACT	PID 96833
SECTION	
STRUCTURE	
STATE JOB	
CUSTOMER	LAKE ERIE CONSTRUCTION COMPANY
CONTRACTOR	
ARCH/ENG	
REFERENCE	
ITEM	
FINISH	SEE NOTES-SHT E400

DRAWN BY	CHECKED BY	MRH NO	JOB MGR	DWG STATUS	JOB NO.	TOTAL SHEETS	SHEET
MRH 04-22-21	SRF 08-12-21	1914	JL	FABRICATION 08-16-21	19-1108		E411

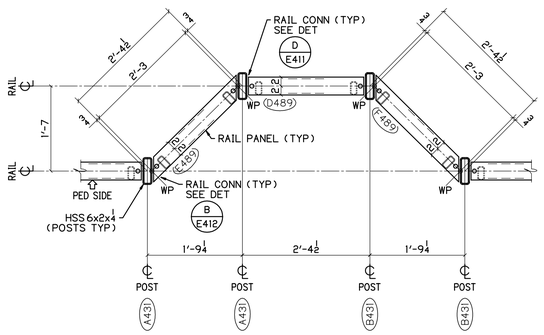

SEE SHT E411 FOR TYP ELEVATIONS & DETAILS

DETAIL A E412
1 1/2" = 1'-0

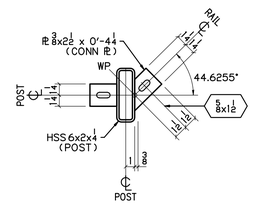

DET SHOWING CONN BAR

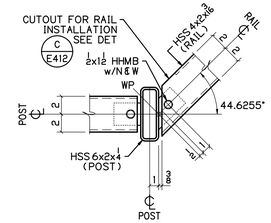

DET SHOWING RAIL CONN

DETAIL B E412
1 1/2" = 1'-0

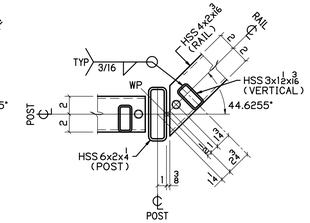

DET SHOWING VERTICLE

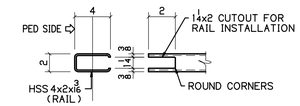

DETAIL C E412
1 1/2" = 1'-0

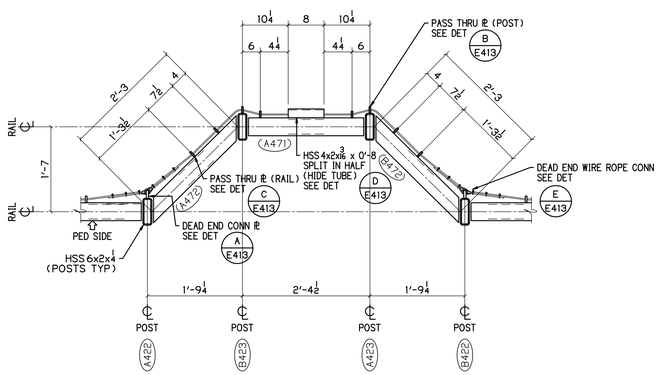

SEE SHT E413 FOR TYP ELEVATIONS & DETAILS

DETAIL D E412
1 1/2" = 1'-0

BU-19 BLUE-GREEN LINES
100% COMPLETE 08-16-21

P.H. DREW INC.
2450 N. RACEWAY RD. - P.O. BOX 34295
INDIANAPOLIS, INDIANA 46234
PHONE : (317) 297-5152
FAX : (317) 297-5313

APPROVAL
APPROVED 08-03-21

CUY-IR490 / SR010-2.09 / 19.28
DECORATIVE FENCE
RAIL @ LIGHT STD DETAILS - LEVEL

REVISION

REV	DATE	DESCRIPTION	BY

STATE	OHIO
COUNTY	CUYAHOGA (CITY OF CLEVELAND)
PROJECT	3000 (17)
CONTRACT	PID 96833
SECTION	
STRUCTURE	
STATE JOB	

APPROVAL RECORD

DATE	ISSUED	APP DATE	APPROVAL STATUS
04-22-21	APPROVAL	05-12-21	RESUBMIT
05-26-21	APPROVAL	08-03-21	APPROVED
08-16-21	FABRICATION		

CUSTOMER	LAKE ERIE CONSTRUCTION COMPANY
CONTRACTOR	
ARCH/ENG	
REFERENCE	
ITEM	
FINISH	SEE NOTES - SHT E400

DRAWN BY	CHECKED BY	MRH NO	JOB MGR	DWG STATUS	JOB NO.	TOTAL SHEETS	SHEET
MRH 04-22-21	SRF 08-12-21	1914	JL	FABRICATION 08-16-21	19-1108		E412

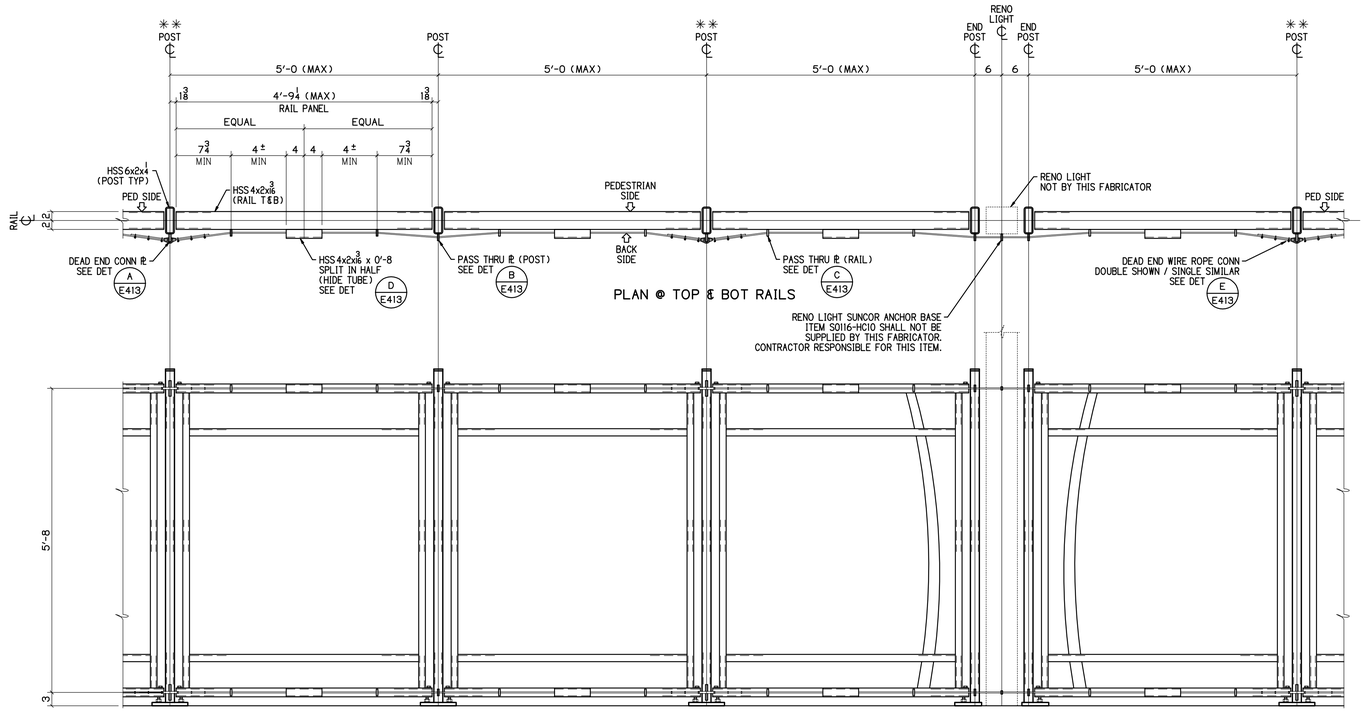

PLAN @ TOP & BOT RAILS

** POST REQUIRING DEAD END CABLE CONNECTION

TYP WIRE ROPE ELEVATION

SCHEMATIC ONLY

BACK SIDE SHOWN / WEST PARAPET ONLY

WIRE ROPE NOTES

1. WIRE ROPE SHALL BE STAINLESS STEEL TYPE 304, 1/4" DIAMETER, 7x19 STRAND AND SHALL BE VINYL COATED BLACK TO 5/16".
2. WIRE ROPE CLAMPS SHALL BE STAINLES STEEL FOR 1/4" WIRE ROPE. THE VINYL COATING SHALL BE REMOVED ONLY AT EACH CLAMP LOCATION AT THE LIVE AND DEAD ENDS TO ALLOW THE CLAMPS DIRECT CONTACT WITH THE WIRE ROPE.
3. WIRE ROPE THIMBLES SHALL BE STAINLESS STEEL TYPE 304 SIZED FOR 5/16". THE THIMBLES SHALL BE OPEN STANDARD DUTY.
4. WIRE ROPE SHALL BE HAND TENSIONED ONLY TO REMOVE SLACK BY WORKING THE COILED PART INSIDE THE HIDE TUBES WITH THE CLAMPS AT THE DEAD END.
5. THE COILED WIRE ROPE SHALL BE BOUND BY A BREAK AWAY CLIP TO ALLOW FOR LANYARD TYPE EXTENSION TO HOLD THE POSTS, RAILS AND LIGHTS FROM FALLING BELOW DUE TO ACCIDENTAL VEHICULAR IMPACT.
6. THE STAINLESS STEEL 3/8" ANCHOR BASE WITH STUD, SUNCOR #S0116-HC10 FOR THE RENO LIGHT SHALL NOT BE SUPPLIED BY THIS FABRICATOR. THE CONTRACTOR SHALL BE RESPONSIBLE TO PROVIDE THIS ITEM.

WIRE ROPE PART NUMBERS

1. ALL WIRE ROPE AND HARDWARE SHALL BE BY FEHR BROS. INDUSTRIES, INC.
2. THE WIRE ROPE SHALL BE PART NO 259250
3. THE WIRE ROPE THIMBLES SHALL BE PART NO STH312SD
4. THE WIRE ROPE CLAMPS SHALL BE PART NO SWRC250

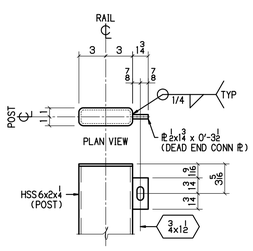

DEAD END CONN PL

DETAIL A E413

1 1/2" = 1'-0

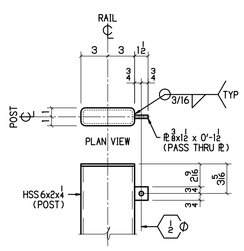

PASS THRU PL (POST)

DETAIL B E413

1 1/2" = 1'-0

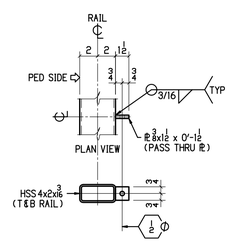

PASS THRU PL (RAIL)

DETAIL C E413

1 1/2" = 1'-0

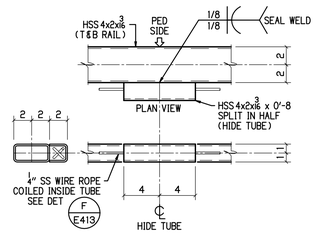

HIDE TUBE DETAIL

DETAIL D E413

1 1/2" = 1'-0

NOTE
WIRE ROPE LENGTH ADDITION FOR TURNBACKS = 1'-0

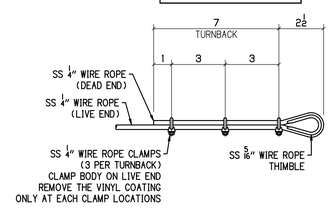

DETAIL E E413

1 1/2" = 1'-0

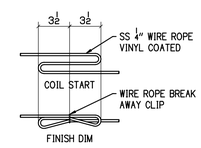

HIDE TUBE COIL DETAIL

DETAIL F E413

1 1/2" = 1'-0

BU-19 BLUE-GREEN LINES

100% COMPLETE 08-16-21

P.H. DREW INC.
2450 N. RACEWAY RD. - P.O. BOX 34295
INDIANAPOLIS, INDIANA 46234
PHONE : (317) 297-5152
FAX : (317) 297-5313

APPROVAL: APPROVED 08-03-21

CUY-IR490 / SR010-2.09 / 19.28

DECORATIVE FENCE

WIRE ROPE DETAILS

REVISION

REV	DATE	DESCRIPTION	BY
1	08-14-21	REV WELD	MRH

APPROVAL RECORD

DATE	ISSUED	APP DATE	APPROVAL STATUS
04-22-21	APPROVAL	05-12-21	RESUBMIT
05-26-21	APPROVAL	08-03-21	APPROVED
08-16-21	FABRICATION		

STATE	OHIO
COUNTY	CUYAHOGA (CITY OF CLEVELAND)
PROJECT	3000 (17)
CONTRACT	PID 96833
SECTION	
STRUCTURE	
STATE JOB	
CUSTOMER	LAKE ERIE CONSTRUCTION COMPANY
CONTRACTOR	
ARCH/ENG	
REFERENCE	
ITEM	
FINISH	SEE NOTES - SHT E400

DRAWN BY	CHECKED BY	MRH NO	JOB MGR	DWG STATUS	JOB NO.	TOTAL SHEETS	SHEET
MRH 04-22-21	SRF 08-12-21	1914	JL	FABRICATION 08-16-21	19-1108		E413

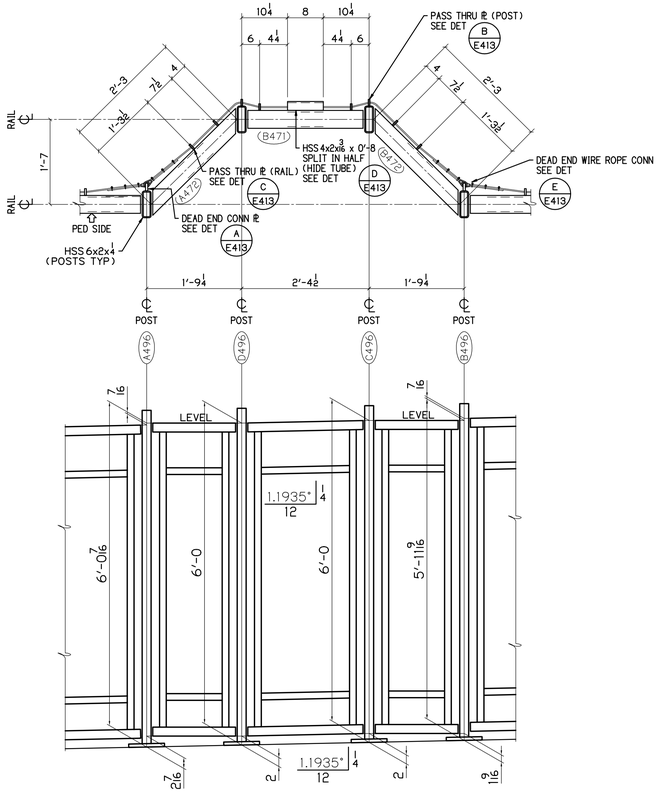

RAIL ELEVATION @ LIGHT STD

FOR SLOPED CONDITIONS
PEDESTRIAN SIDE SHOWN
SEE SHT E413 FOR TYP ELEVATIONS & DETAILS

DETAIL A / E414

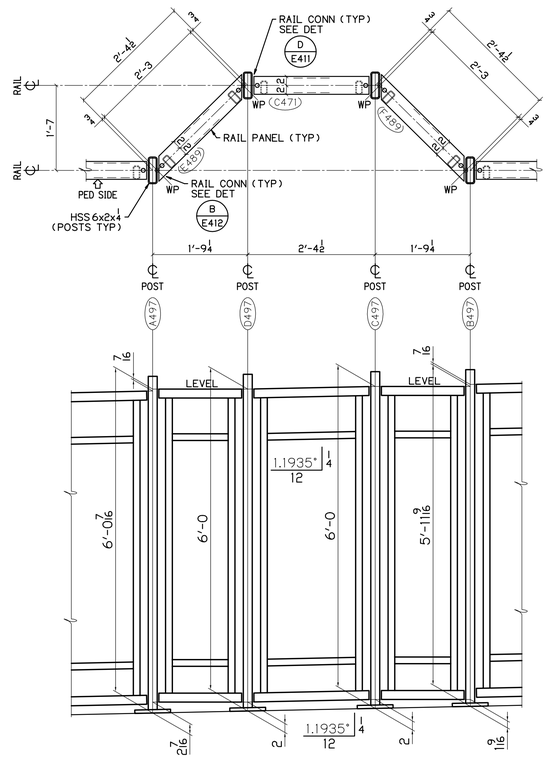

RAIL ELEVATION @ LIGHT STD

FOR SLOPED CONDITIONS
PEDESTRIAN SIDE SHOWN
SEE SHT E413 FOR TYP ELEVATIONS & DETAILS

DETAIL B / E414

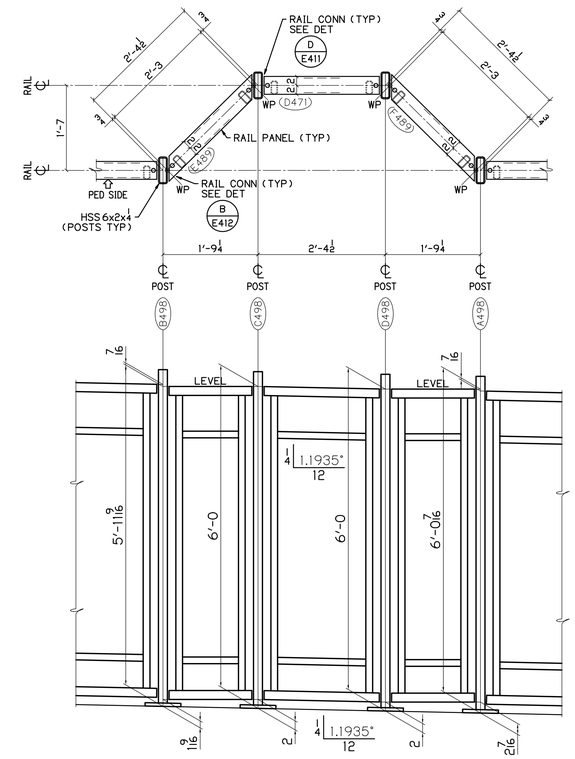

RAIL ELEVATION @ LIGHT STD

FOR SLOPED CONDITIONS
PEDESTRIAN SIDE SHOWN
SEE SHT E413 FOR TYP ELEVATIONS & DETAILS

DETAIL C / E414

BU-19 BLUE-GREEN LINES
100% COMPLETE 08-16-21

P.H. DREW INC.
2450 N. RACEWAY RD. - P.O. BOX 34295
INDIANAPOLIS, INDIANA 46234
PHONE : (317) 297-5152
FAX : (317) 297-5313

APPROVAL: APPROVED 08-03-21

CUY-IR490 / SR010-2.09 / 19.28
DECORATIVE FENCE
RAIL @ LIGHT STD DETAILS - SLOPE

REVISION

REV	DATE	DESCRIPTION	BY

APPROVAL RECORD

DATE	ISSUED	APP DATE	APPROVAL STATUS
04-22-21	APPROVAL	05-12-21	RESUBMIT
05-26-21	APPROVAL	08-03-21	APPROVED
08-16-21	FABRICATION		

STATE	OHIO
COUNTY	CUYAHOGA (CITY OF CLEVELAND)
PROJECT	3000 (17)
CONTRACT	PID 96833
SECTION	
STRUCTURE	
STATE JOB	
CUSTOMER	LAKE ERIE CONSTRUCTION COMPANY
CONTRACTOR	
ARCH/ENG	
REFERENCE	
ITEM	
FINISH	SEE NOTES-SHT E400

DRAWN BY	CHECKED BY	MRH NO	JOB MGR	DWG STATUS	JOB NO.	TOTAL SHEETS	SHEET
MRH 04-22-21	SRF 08-12-21	1914	JL	FABRICATION 08-16-21	19-1108		E414

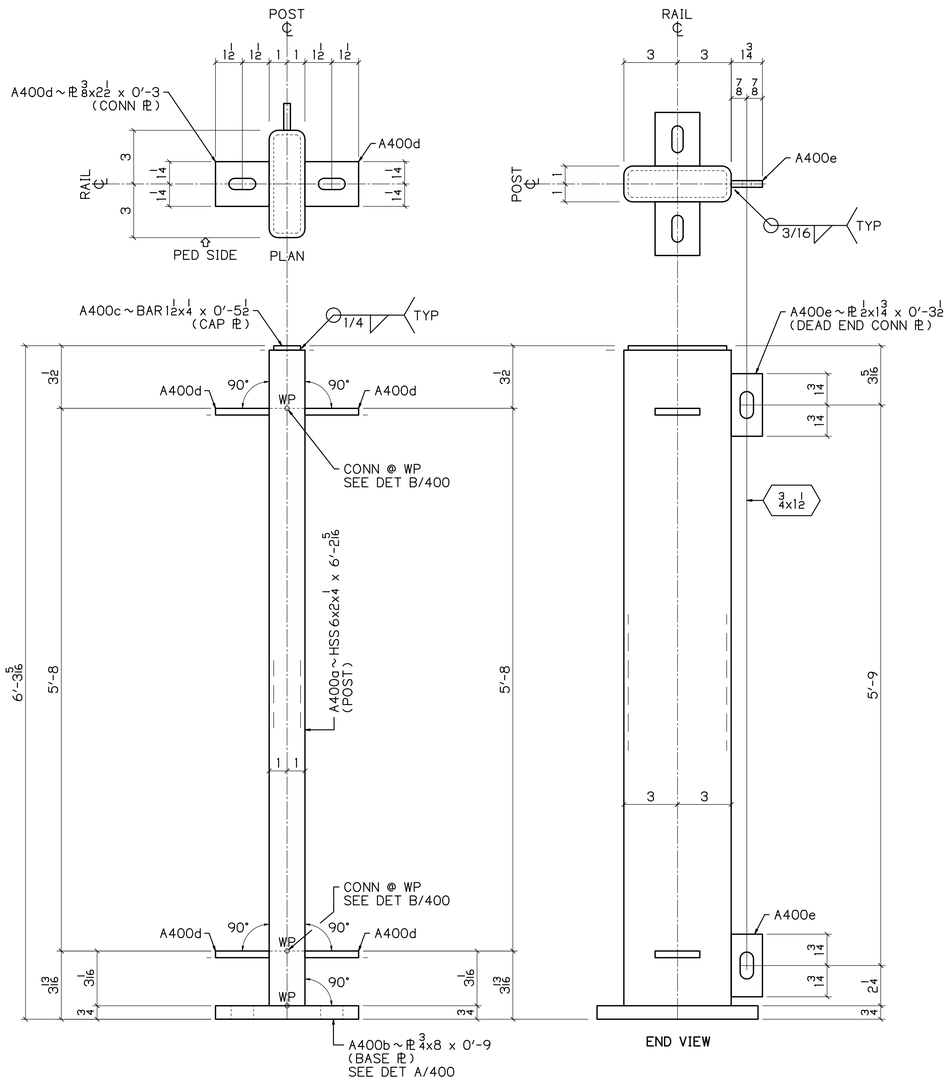

21 ~ A400
POSTS
DEAD END CONNECTION
PEDESTRIAN SIDE SHOWN

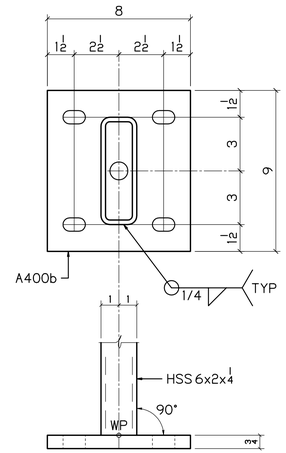

DETAIL A 400

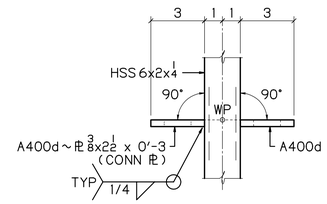

DETAIL B 400

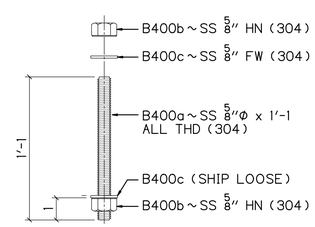

1462 ~ B400
ANCHOR RODS

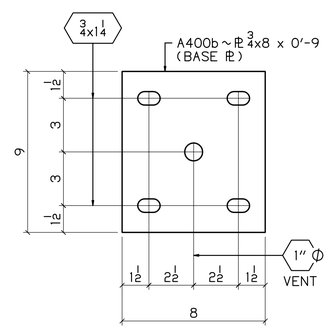

DETAIL OF A400b
BASE PL

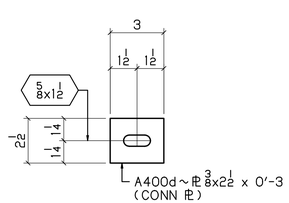

DETAIL OF A400d
CONN PL

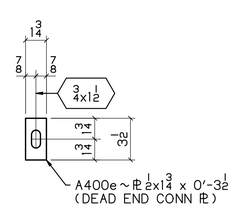

DETAIL OF A400e
DEAD END CONN PL

LEV

BILL OF MATERIAL

NO	MK	NO	SUBMK	MATERIAL	FT	IN	REMARKS	SORT
21	A400			POSTS				MM
		21	A400a	HSS 6x2x1/4	6	2 5/16	SC2E	TS
		21	A400b	PL 3/4x8	0	9	BASE PL	PL
		21	A400c	BAR 1 1/2x1/4	0	5 1/2	CAP PL	B
		84	A400d	PL 3/8x2 1/2	0	3	CONN PL	PL
		42	A400e	PL 1/2x1 3/4	0	3 1/2	DEAD END CONN PL	PL
1462	B400			ANCHOR RODS				MM
		1462	B400a	SS 5/8"-11 ALL THD	1	1	304	MI
		2924	B400b	SS 5/8" HN			304	MI
		2924	B400c	SS 5/8" FW			304	MI
				WIRE ROPE SYSTEM				
1938'-7/16	1			SS 1/4" WIRE ROPE 7 x 19 STRAND	2000	0	LN / FT	MI
				BLACK VINYL COATED TO 5/16"			PART NO 2S9250	
				BY FEHR BROS. INDUSTRIES, INC.				
270	280			SS 5/16" WIRE ROPE THIMBLES			PART NO STH312SD	MI
				BY FEHR BROS. INDUSTRIES, INC.				
810	820			SS 1/4" WIRE ROPE CLAMPS			PART NO SWRC250	MI
				BY FEHR BROS. INDUSTRIES, INC.				
259	275			WIRE ROPE BREAK AWAY CLIP				MI
				FIELD BOLTS			FOR WALLS 1B & 1D	
838	850			1/2" A325 HEX BOLT	0	1 1/2		MI
838	850			1/2" A563 HEX NUTS				MI
838	850			1/2" F436 FLAT WASHERS				MI
9422	9450			1/4" TEK SCREWS	0	1 1/4		MI

BU-19 BLUE-GREEN LINES
100% COMPLETE 08-16-21

P.H. DREW INC.
2450 N. RACEWAY RD. - P.O. BOX 34295
INDIANAPOLIS, INDIANA 46234
PHONE : (317) 297-5152
FAX : (317) 297-5313

APPROVAL: APPROVED 08-03-21

CUY-IR490 / SR010-2.09 / 19.28
DECORATIVE FENCE
POSTS, ANCHORS & FIELD BOLTS

REVISION

REV	DATE	DESCRIPTION	BY

APPROVAL RECORD

DATE	ISSUED	APP DATE	APPROVAL STATUS
08-16-21	FABRICATION		

STATE	OHIO
COUNTY	CUYAHOGA (CITY OF CLEVELAND)
PROJECT	3000 (17)
CONTRACT	PID 96833
SECTION	
STRUCTURE	
STATE JOB	
CUSTOMER	LAKE ERIE CONSTRUCTION COMPANY
CONTRACTOR	
ARCH/ENG	
REFERENCE	
ITEM	
FINISH	SEE NOTES-SHT E400

DRAWN BY	CHECKED BY	MRH NO	JOB MGR	DWG STATUS	JOB NO.	TOTAL SHEETS	SHEET
MRH 07-11-21	SRF 08-12-21	1914	JL	FABRICATION 08-16-21	19-1108		400

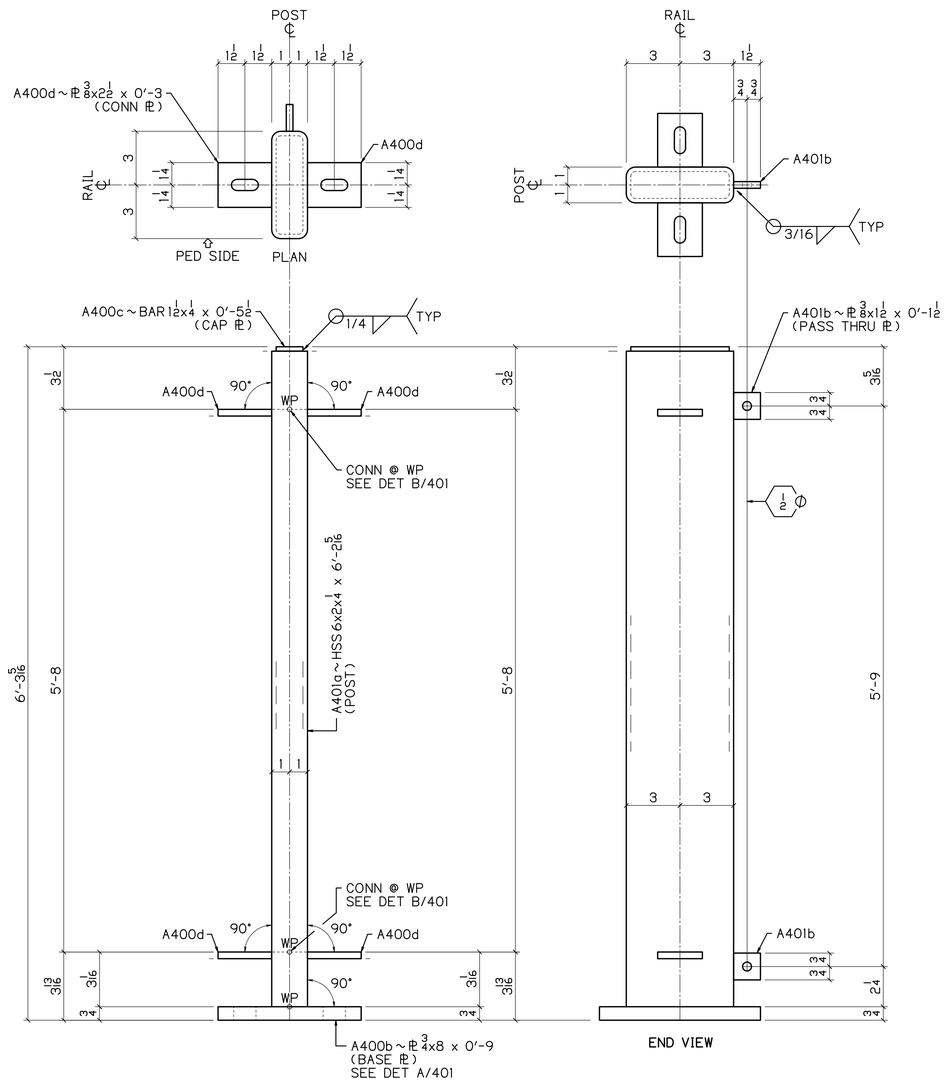

22 ~ A401

POSTS
PASS THRU
PEDESTRIAN SIDE SHOWN

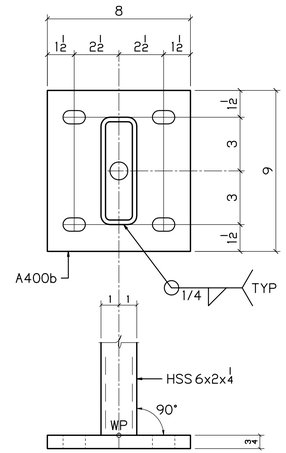

DETAIL A 401

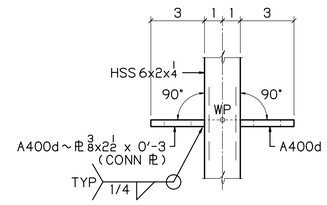

DETAIL B 401

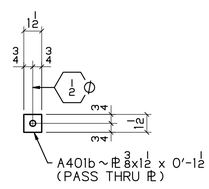

DETAIL OF A401b

PASS THRU PL

LEV

BILL OF MATERIAL

NO	MK	NO	SUBMK	MATERIAL	FT	IN	REMARKS	SORT
22	A401			POSTS				MM
		22	A401a	HSS 6x2x4 1/4	6	2 5/16	SC2E	TS
		44	A401b	PL 3/8x1 1/2	0	1 1/2	PASS THRU PL	PL
		22	A400b	PL 3/4x8	0	9	BASE PL	PL
		22	A400c	BAR 1 1/2x4 1/4	0	5 1/2	CAP PL	B
		88	A400d	PL 3/8x2 1/2	0	3	CONN PL	PL

BU-19 BLUE-GREEN LINES
100% COMPLETE 08-16-21

P.H. DREW INC.
2450 N. RACEWAY RD. - P.O. BOX 34295
INDIANAPOLIS, INDIANA 46234
PHONE : (317) 297-5152
FAX : (317) 297-5313

APPROVAL: APPROVED 08-03-21

CUY-IR490 / SR010-2.09 / 19.28

DECORATIVE FENCE

POSTS

REVISION REV	DATE	DESCRIPTION	BY

APPROVAL RECORD DATE	ISSUED	APP DATE	APPROVAL STATUS
08-16-21	FABRICATION		

STATE	OHIO
COUNTY	CUYAHOGA (CITY OF CLEVELAND)
PROJECT	3000 (17)
CONTRACT	PID 96833
SECTION	
STRUCTURE	
STATE JOB	
CUSTOMER	LAKE ERIE CONSTRUCTION COMPANY
CONTRACTOR	
ARCH/ENG	
REFERENCE	
ITEM	
FINISH	SEE NOTES-SHT E400

DRAWN BY	CHECKED BY	MRH NO	JOB MGR	DWG STATUS	JOB NO.	TOTAL SHEETS	SHEET
MRH 07-11-21	SRF 08-12-21	1914	JL	FABRICATION 08-16-21	19-1108		401

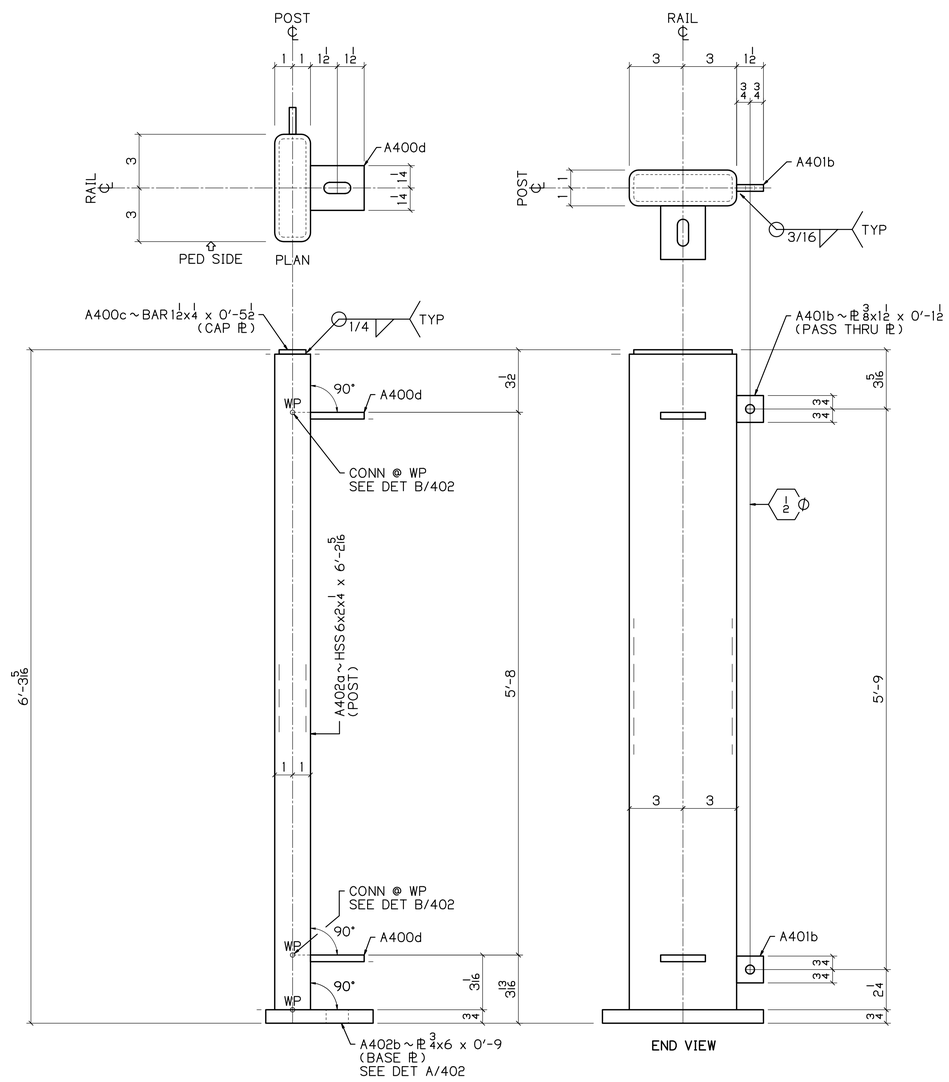

2 ~ A402

POSTS
PASS THRU
PEDESTRIAN SIDE SHOWN

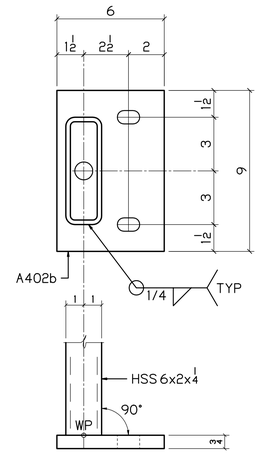

DETAIL A 402

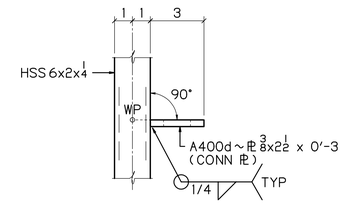

DETAIL B 402

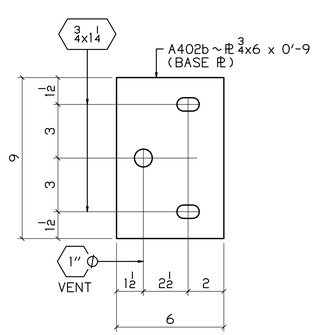

DETAIL OF A402b

BASE ℙ

LEV

BILL OF MATERIAL

NO	MK	NO	SUBMK	MATERIAL	FT	IN	REMARKS	SORT
2	A402			POSTS				MM
		2	A402a	HSS 6x2x1/4	6	2 5/16	SC2E	TS
		2	A402b	ℙ 3/4x6	0	9	BASE ℙ	PL
		4	A401b	ℙ 2x1 1/2	0	1 1/2	PASS THRU ℙ	PL
		2	A400c	BAR 1 1/2x1/4	0	5 1/2	CAP ℙ	B
		4	A400d	ℙ 3/8x2 1/2	0	3	CONN ℙ	PL

BU-19 BLUE-GREEN LINES
100% COMPLETE 08-16-21

P.H. DREW INC.
2450 N. RACEWAY RD. - P.O. BOX 34295
INDIANAPOLIS, INDIANA 46234
PHONE : (317) 297-5152
FAX : (317) 297-5313

APPROVAL
APPROVED 08-03-21

CUY-IR490 / SR010-2.09 / 19.28

DECORATIVE FENCE

POSTS

REVISION REV	DATE	DESCRIPTION	BY

APPROVAL RECORD DATE	ISSUED	APP DATE	APPROVAL STATUS
08-16-21	FABRICATION		

STATE	OHIO
COUNTY	CUYAHOGA (CITY OF CLEVELAND)
PROJECT	3000 (17)
CONTRACT	PID 96833
SECTION	
STRUCTURE	
STATE JOB	
CUSTOMER	LAKE ERIE CONSTRUCTION COMPANY
CONTRACTOR	
ARCH/ENG	
REFERENCE	
ITEM	
FINISH	SEE NOTES-SHT E400

DRAWN BY	CHECKED BY	MRH NO	JOB MGR	DWG STATUS	JOB NO.	TOTAL SHEETS	SHEET
MRH 07-11-21	SRF 08-12-21	1914	JL	FABRICATION 08-16-21	19-1108		402

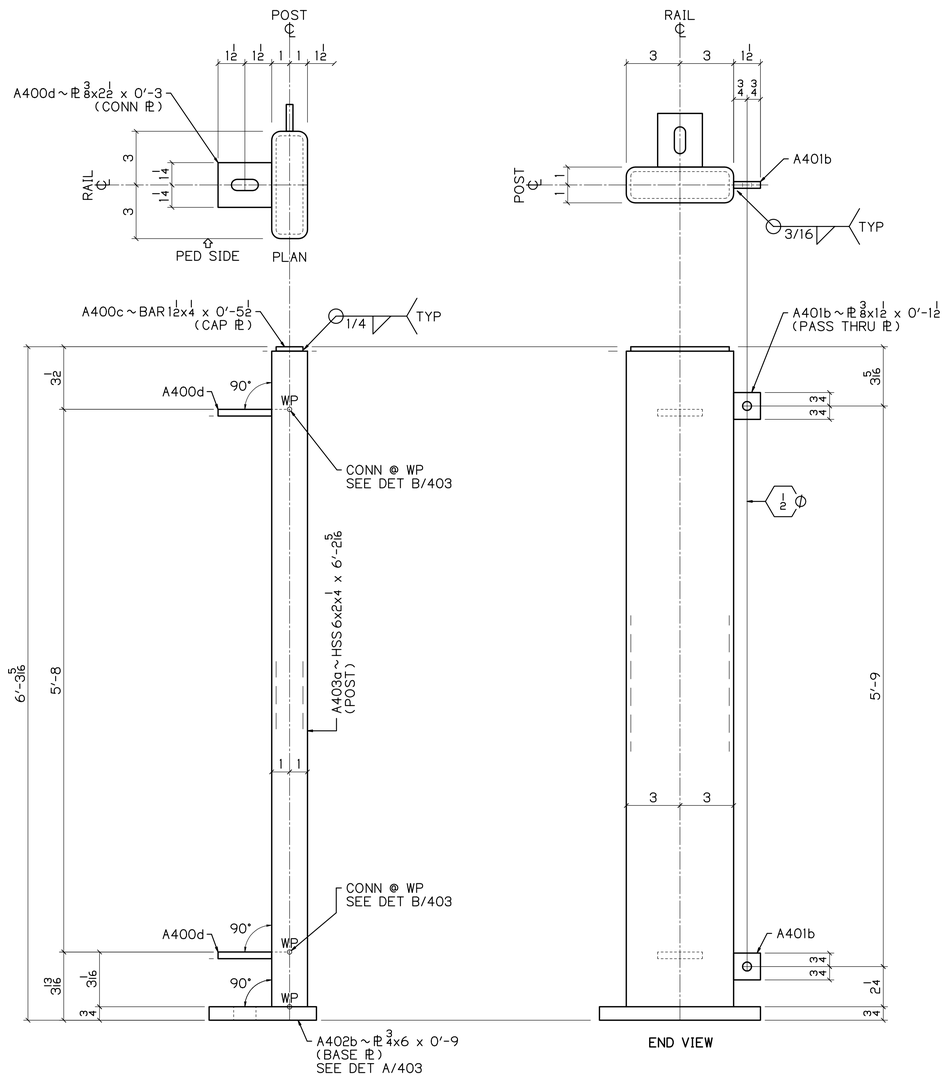

1 ~ A403

POSTS
PASS THRU
PEDESTRIAN SIDE SHOWN

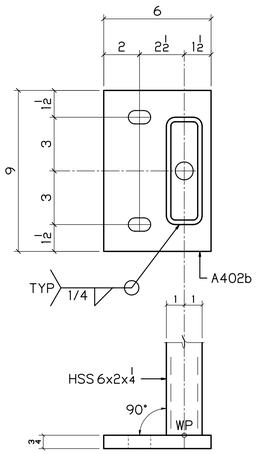

DETAIL A 403

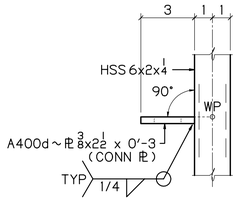

DETAIL B 403

BILL OF MATERIAL

NO	MK	NO	SUBMK	MATERIAL	FT	IN	REMARKS	SORT
1	A403			POSTS				MM
		1	A403a	HSS 6x2x1/4	6	2 5/16	SC2E	TS
		1	A402b	PL 3/4x6	0	9	BASE PL	PL
		2	A401b	PL 1/2x1 1/2	0	1 1/2	PASS THRU PL	PL
		1	A400c	BAR 1 1/2x1/4	0	5 1/2	CAP PL	B
		2	A400d	PL 3/8x2 1/2	0	3	CONN PL	PL

BU-19 BLUE-GREEN LINES
100% COMPLETE 08-16-21

P.H. DREW INC.
2450 N. RACEWAY RD. - P.O. BOX 34295
INDIANAPOLIS, INDIANA 46234
PHONE : (317) 297-5152
FAX : (317) 297-5313

APPROVAL
APPROVED 08-03-21

CUY-IR490 / SR010-2.09 / 19.28

DECORATIVE FENCE

POSTS

REVISION REV	DATE	DESCRIPTION	BY

APPROVAL RECORD DATE	ISSUED	APP DATE	APPROVAL STATUS
08-16-21	FABRICATION		

STATE	OHIO
COUNTY	CUYAHOGA (CITY OF CLEVELAND)
PROJECT	3000 (17)
CONTRACT	PID 96833
SECTION	
STRUCTURE	
STATE JOB	
CUSTOMER	LAKE ERIE CONSTRUCTION COMPANY
CONTRACTOR	
ARCH/ENG	
REFERENCE	
ITEM	
FINISH	SEE NOTES-SHT E400

DRAWN BY	CHECKED BY	MRH NO	JOB MGR	DWG STATUS	JOB NO.	TOTAL SHEETS	SHEET
MRH 07-11-21	SRF 08-12-21	1914	JL	FABRICATION 08-16-21	19-1108		403

LEV

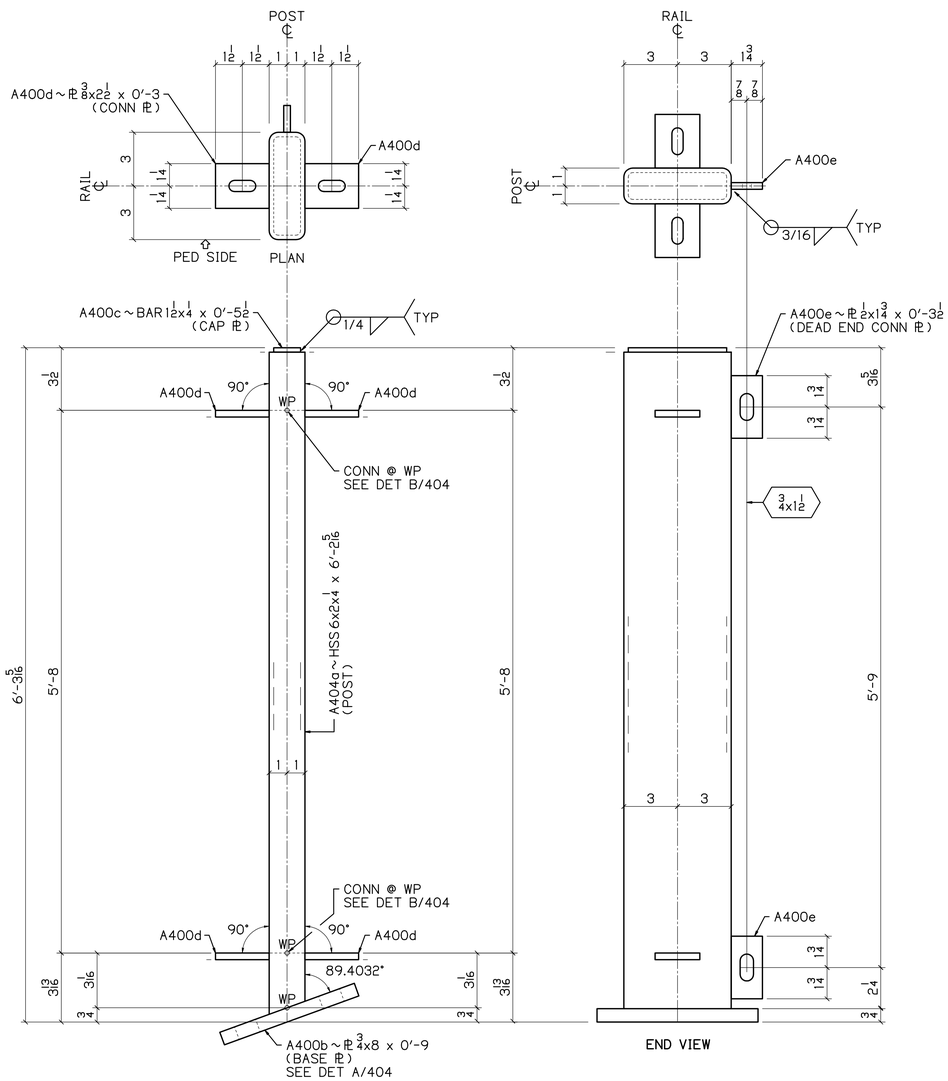

11 ~ A404

POSTS
DEAD END CONNECTION
PEDESTRIAN SIDE SHOWN

0.5968" 1/8 / 12

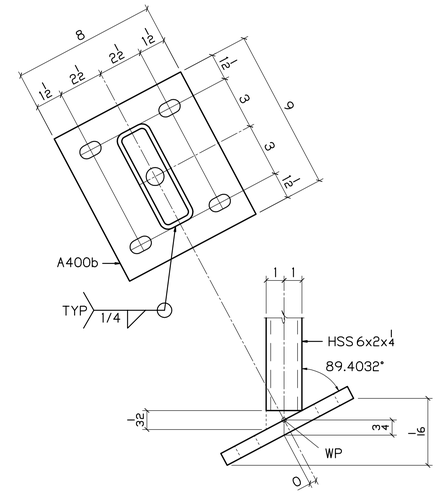

DETAIL A 404

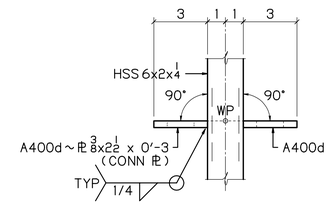

DETAIL B 404

UP

BILL OF MATERIAL

NO	MK	NO	SUBMK	MATERIAL	FT	IN	REMARKS	SORT
11	A404			POSTS				MM
		11	A404a	HSS 6x2x1/4	6	2 5/16	SC2E	TS
		11	A400b	PL 3/4x8	0	9	BASE PL	PL
		11	A400c	BAR 1 1/2x1/4	0	5 1/2	CAP PL	B
		44	A400d	PL 3/8x2 1/2	0	3	CONN PL	PL
		22	A400e	PL 1/2x1 3/4	0	3 1/2	DEAD END CONN PL	PL

BU-19 BLUE-GREEN LINES
100% COMPLETE 08-16-21

P.H. DREW INC.
2450 N. RACEWAY RD. - P.O. BOX 34295
INDIANAPOLIS, INDIANA 46234
PHONE : (317) 297-5152
FAX : (317) 297-5313

APPROVAL: APPROVED 08-03-21

CUY-IR490 / SR010-2.09 / 19.28

DECORATIVE FENCE

POSTS

REVISION	REV	DATE	DESCRIPTION	BY

STATE	OHIO
COUNTY	CUYAHOGA (CITY OF CLEVELAND)
PROJECT	3000 (17)
CONTRACT	PID 96833
SECTION	
STRUCTURE	
STATE JOB	

APPROVAL RECORD	DATE	ISSUED	APP DATE	APPROVAL STATUS
	08-16-21	FABRICATION		

CUSTOMER	LAKE ERIE CONSTRUCTION COMPANY
CONTRACTOR	
ARCH/ENG	
REFERENCE	
ITEM	
FINISH	SEE NOTES-SHT E400

DRAWN BY	CHECKED BY	MRH NO	JOB MGR	DWG STATUS	JOB NO.	TOTAL SHEETS	SHEET
MRH 07-11-21	SRF 08-12-21	1914	JL	FABRICATION 08-16-21	19-1108		404

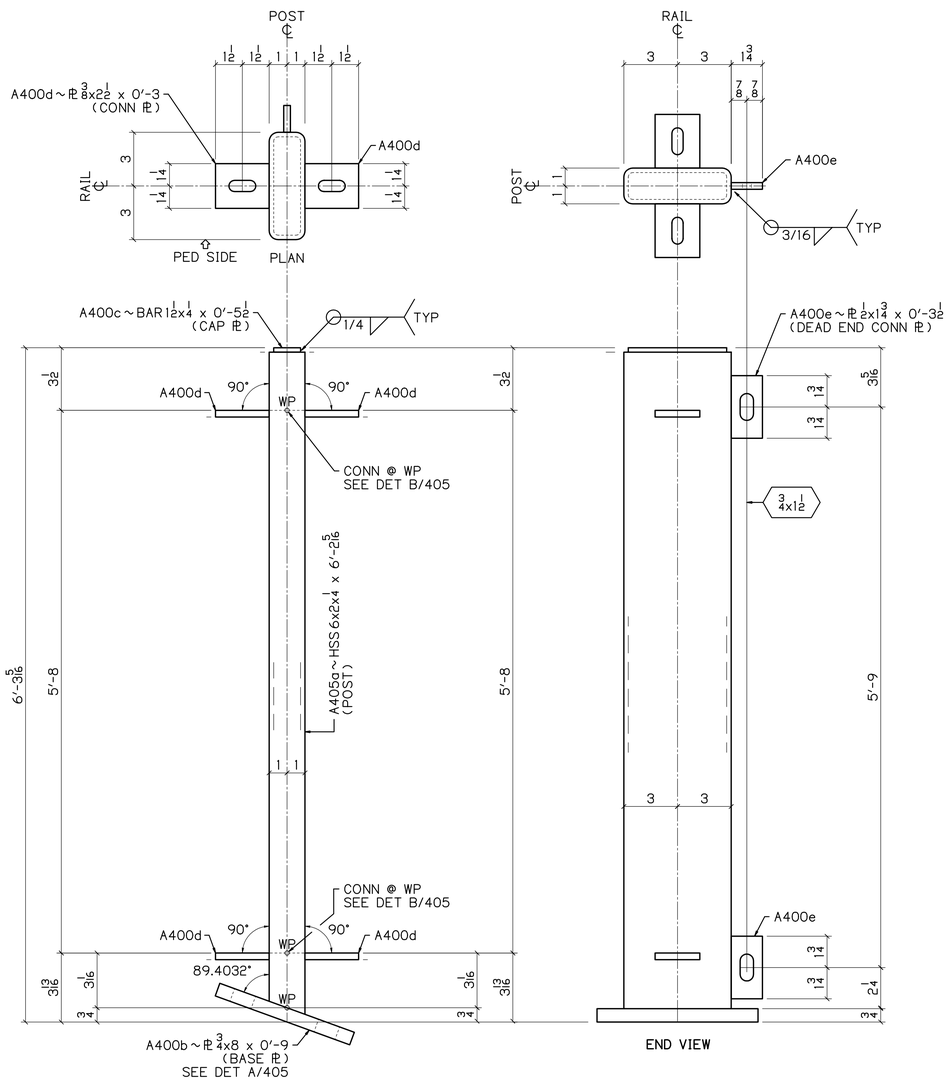

10 ~ A405

POSTS
DEAD END CONNECTION
PEDESTRIAN SIDE SHOWN

1/8 | 0.5968° / 12

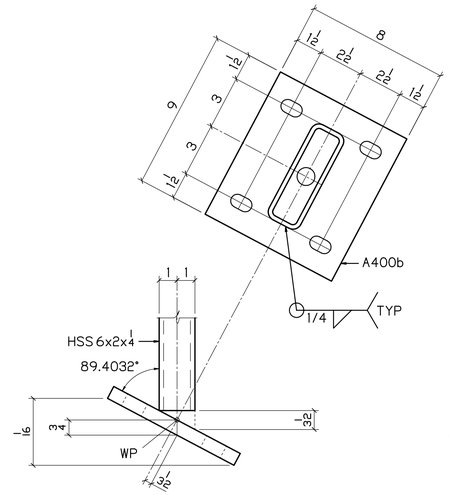

DETAIL A 405

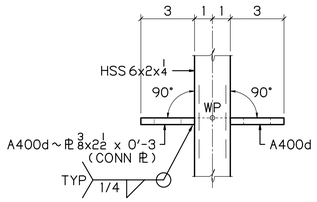

DETAIL B 405

BILL OF MATERIAL

NO	MK	NO	SUBMK	MATERIAL	FT	IN	REMARKS	SORT
10	A405			POSTS				MM
		10	A405a	HSS 6x2x1/4	6	2 5/16	SC2E	TS
		10	A400b	PL 3/4x8	0	9	BASE PL	PL
		10	A400c	BAR 1 1/2x1/4	0	5 1/2	CAP PL	B
		40	A400d	PL 3/8x2 1/2	0	3	CONN PL	PL
		20	A400e	PL 1/2x1 3/4	0	3 1/2	DEAD END CONN PL	PL

BU-19 BLUE-GREEN LINES
100% COMPLETE 08-16-21

P.H. DREW INC.
2450 N. RACEWAY RD. - P.O. BOX 34295
INDIANAPOLIS, INDIANA 46234
PHONE : (317) 297-5152
FAX : (317) 297-5313

APPROVAL: APPROVED 08-03-21

CUY-IR490 / SR010-2.09 / 19.28

DECORATIVE FENCE

POSTS

REVISION

REV	DATE	DESCRIPTION	BY

STATE	OHIO
COUNTY	CUYAHOGA (CITY OF CLEVELAND)
PROJECT	3000 (17)
CONTRACT	PID 96833
SECTION	
STRUCTURE	
STATE JOB	

APPROVAL RECORD

DATE	ISSUED	APP DATE	APPROVAL STATUS
08-16-21	FABRICATION		

CUSTOMER	LAKE ERIE CONSTRUCTION COMPANY
CONTRACTOR	
ARCH/ENG	
REFERENCE	
ITEM	
FINISH	SEE NOTES - SHT E400

DRAWN BY	CHECKED BY	MRH NO	JOB MGR	DWG STATUS	JOB NO.	TOTAL SHEETS	SHEET
MRH 07-11-21	SRF 08-12-21	1914	JL	FABRICATION 08-16-21	19-1108		405

DN

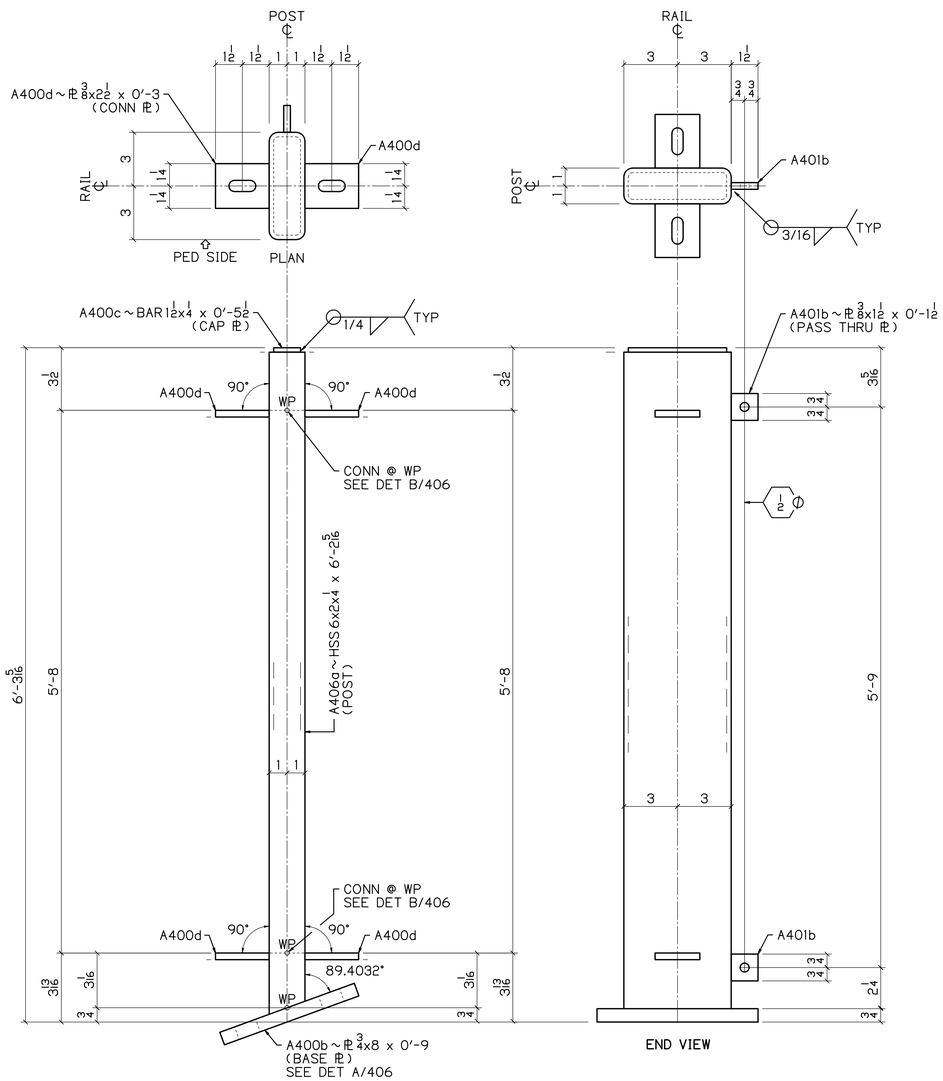

9 ~ A406

POSTS
PASS THRU
PEDESTRIAN SIDE SHOWN

0.5968" | 1/8
12

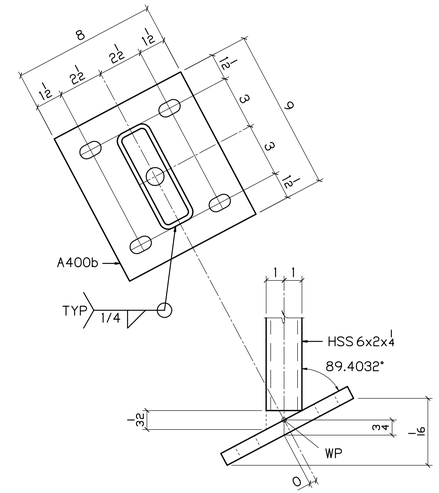

DETAIL A 406

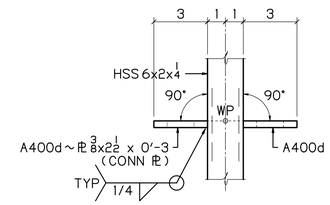

DETAIL B 406

UP

BILL OF MATERIAL

NO	MK	NO	SUBMK	MATERIAL	FT	IN	REMARKS	SORT
9	A406			POSTS				MM
		9	A406a	HSS 6x2x1/4	6	2 5/16	SC2E	TS
		18	A401b	PL 3/8x1 1/2	0	1 1/2	PASS THRU PL	PL
		9	A400b	PL 3/4x8	0	9	BASE PL	PL
		9	A400c	BAR 1 1/2x1/4	0	5 1/2	CAP PL	B
		36	A400d	PL 3/8x2 1/2	0	3	CONN PL	PL

BU-19 BLUE-GREEN LINES
100% COMPLETE 08-16-21

P.H. DREW INC.
2450 N. RACEWAY RD. - P.O. BOX 34295
INDIANAPOLIS, INDIANA 46234
PHONE : (317) 297-5152
FAX : (317) 297-5313

APPROVAL: APPROVED 08-03-21

CUY-IR490 / SR010-2.09 / 19.28

DECORATIVE FENCE

POSTS

REVISION	REV	DATE	DESCRIPTION	BY

STATE	OHIO
COUNTY	CUYAHOGA (CITY OF CLEVELAND)
PROJECT	3000 (17)
CONTRACT	PID 96833
SECTION	
STRUCTURE	
STATE JOB	

APPROVAL RECORD	DATE	ISSUED	APP DATE	APPROVAL STATUS
	08-16-21	FABRICATION		

CUSTOMER	LAKE ERIE CONSTRUCTION COMPANY
CONTRACTOR	
ARCH/ENG	
REFERENCE	
ITEM	
FINISH	SEE NOTES - SHT E400

DRAWN BY	CHECKED BY	MRH NO	JOB MGR	DWG STATUS	JOB NO.	TOTAL SHEETS	SHEET
MRH 07-11-21	SRF 08-12-21	1914	JL	FABRICATION 08-16-21	19-1108		406

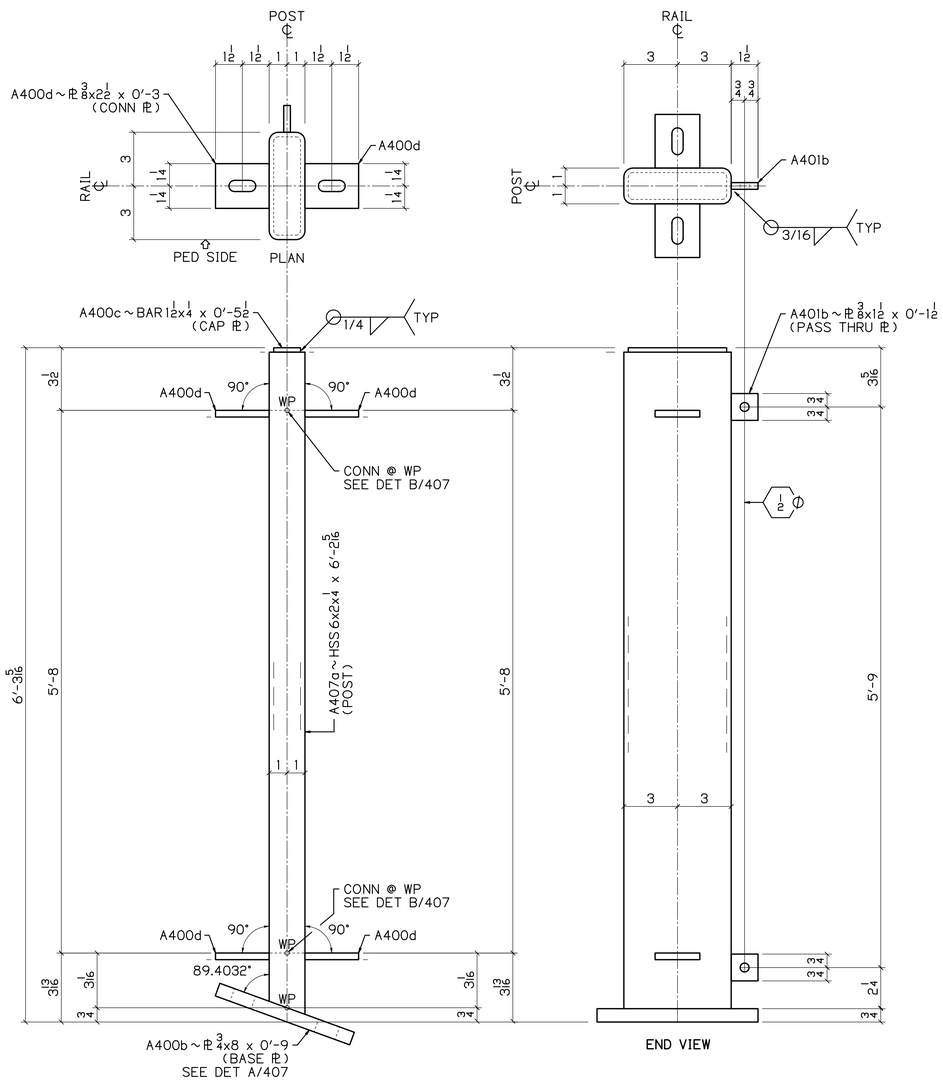

9 ~ A407

POSTS
PASS THRU
PEDESTRIAN SIDE SHOWN

1/8 | 0.5968° / 12

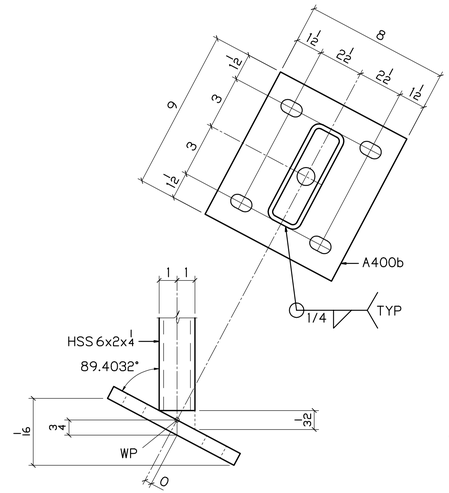

DETAIL A / 407

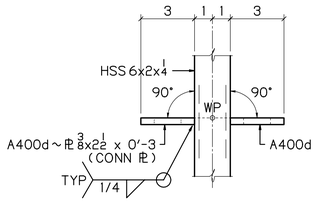

DETAIL B / 407

BILL OF MATERIAL

NO	MK	NO	SUBMK	MATERIAL	FT	IN	REMARKS	SORT
9	A407			POSTS				MM
		9	A407a	HSS 6x2x1/4	6	2 5/16	SC2E	TS
		18	A401b	PL 3/8x1 1/2	0	1 1/2	PASS THRU PL	PL
		9	A400b	PL 3/4x8	0	9	BASE PL	PL
		9	A400c	BAR 1 1/2x1/4	0	5 1/2	CAP PL	B
		36	A400d	PL 3/8x2 1/2	0	3	CONN PL	PL

BU-19 BLUE-GREEN LINES
100% COMPLETE 08-16-21

P.H. DREW INC.
2450 N. RACEWAY RD. - P.O. BOX 34295
INDIANAPOLIS, INDIANA 46234
PHONE : (317) 297-5152
FAX : (317) 297-5313

APPROVAL: APPROVED 08-03-21

CUY-IR490 / SR010-2.09 / 19.28

DECORATIVE FENCE

POSTS

REVISION

REV	DATE	DESCRIPTION	BY

STATE	OHIO
COUNTY	CUYAHOGA (CITY OF CLEVELAND)
PROJECT	3000 (17)
CONTRACT	PID 96833
SECTION	
STRUCTURE	
STATE JOB	

APPROVAL RECORD

DATE	ISSUED	APP DATE	APPROVAL STATUS
08-16-21	FABRICATION		

CUSTOMER	LAKE ERIE CONSTRUCTION COMPANY
CONTRACTOR	
ARCH/ENG	
REFERENCE	
ITEM	
FINISH	SEE NOTES - SHT E400

DRAWN BY	CHECKED BY	MRH NO	JOB MGR	DWG STATUS	JOB NO.	TOTAL SHEETS	SHEET
MRH 07-11-21	SRF 08-12-21	1914	JL	FABRICATION 08-16-21	19-1108		407

DN

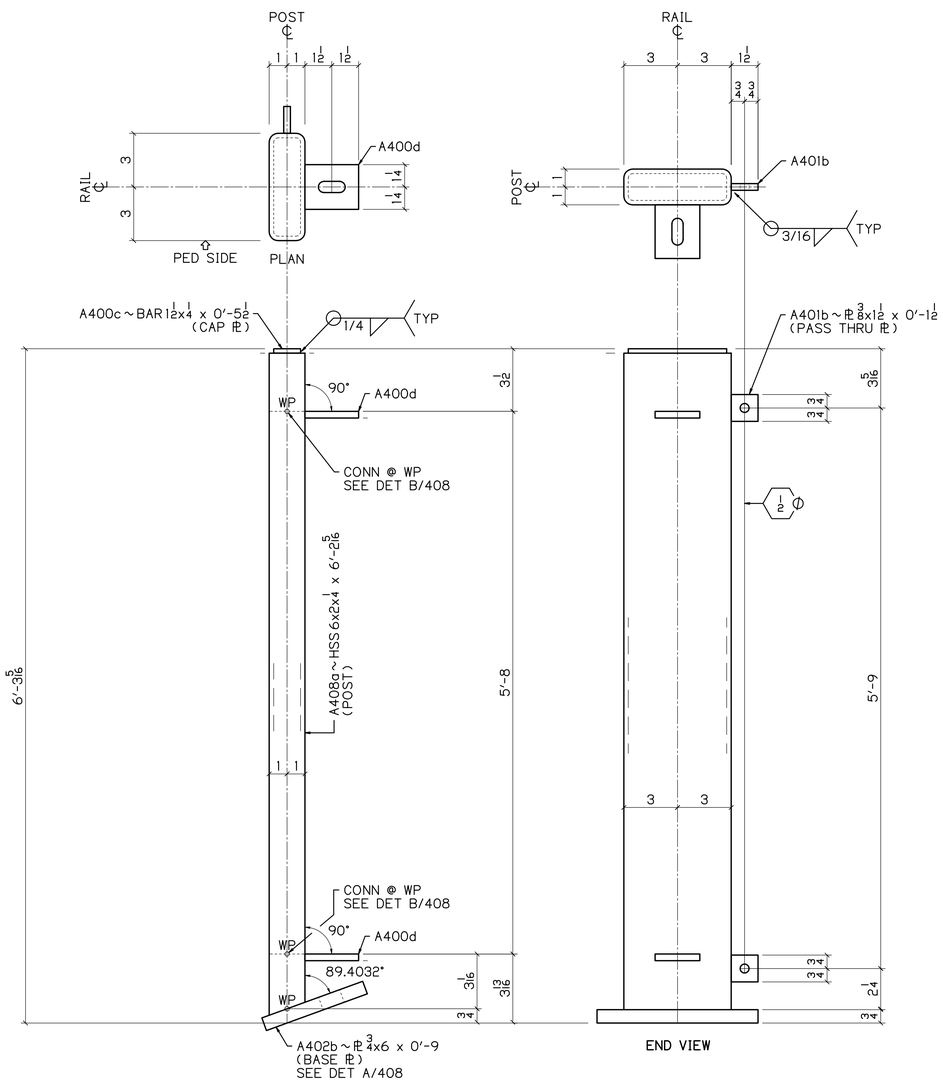

1 ~ A408

POSTS
PASS THRU
PEDESTRIAN SIDE SHOWN

0.5968" | 1/8
12

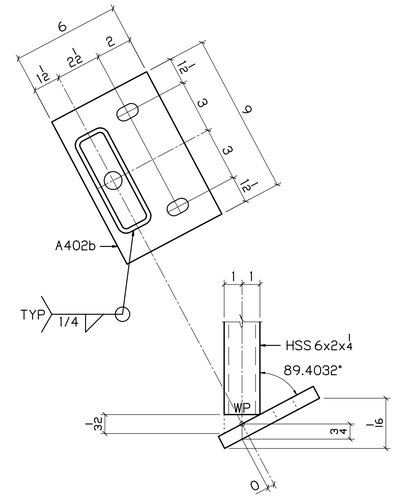

DETAIL A 408

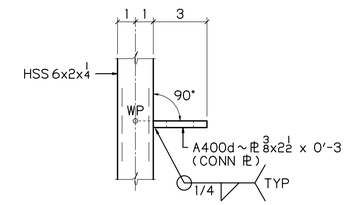

DETAIL B 408

UP

BILL OF MATERIAL

NO	MK	NO	SUBMK	MATERIAL	FT	IN	REMARKS	SORT
1	A408			POSTS				MM
		1	A408a	HSS 6x2x1/4	6	2 5/16	SC2E	TS
		1	A402b	PL 3/4x6	0	9	BASE PL	PL
		2	A401b	PL 1/2x1 1/2	0	1 1/2	PASS THRU PL	PL
		1	A400c	BAR 1 1/2x1/4	0	5 1/2	CAP PL	B
		2	A400d	PL 3/8x2 1/2	0	3	CONN PL	PL

BU-19 BLUE-GREEN LINES
100% COMPLETE 08-16-21

P.H. DREW INC.
2450 N. RACEWAY RD. - P.O. BOX 34295
INDIANAPOLIS, INDIANA 46234
PHONE : (317) 297-5152
FAX : (317) 297-5313

APPROVAL: APPROVED 08-03-21

CUY-IR490 / SR010-2.09 / 19.28

DECORATIVE FENCE

POSTS

REVISION

REV	DATE	DESCRIPTION	BY

STATE	OHIO
COUNTY	CUYAHOGA (CITY OF CLEVELAND)
PROJECT	3000 (17)
CONTRACT	PID 96833
SECTION	
STRUCTURE	
STATE JOB	

APPROVAL RECORD

DATE	ISSUED	APP DATE	APPROVAL STATUS
08-16-21	FABRICATION		

CUSTOMER	LAKE ERIE CONSTRUCTION COMPANY
CONTRACTOR	
ARCH/ENG	
REFERENCE	
ITEM	
FINISH	SEE NOTES - SHT E400

DRAWN BY	CHECKED BY	MRH NO	JOB MGR	DWG STATUS	JOB NO.	TOTAL SHEETS	SHEET
MRH 07-11-21	SRF 08-12-21	1914	JL	FABRICATION 08-16-21	19-1108		408

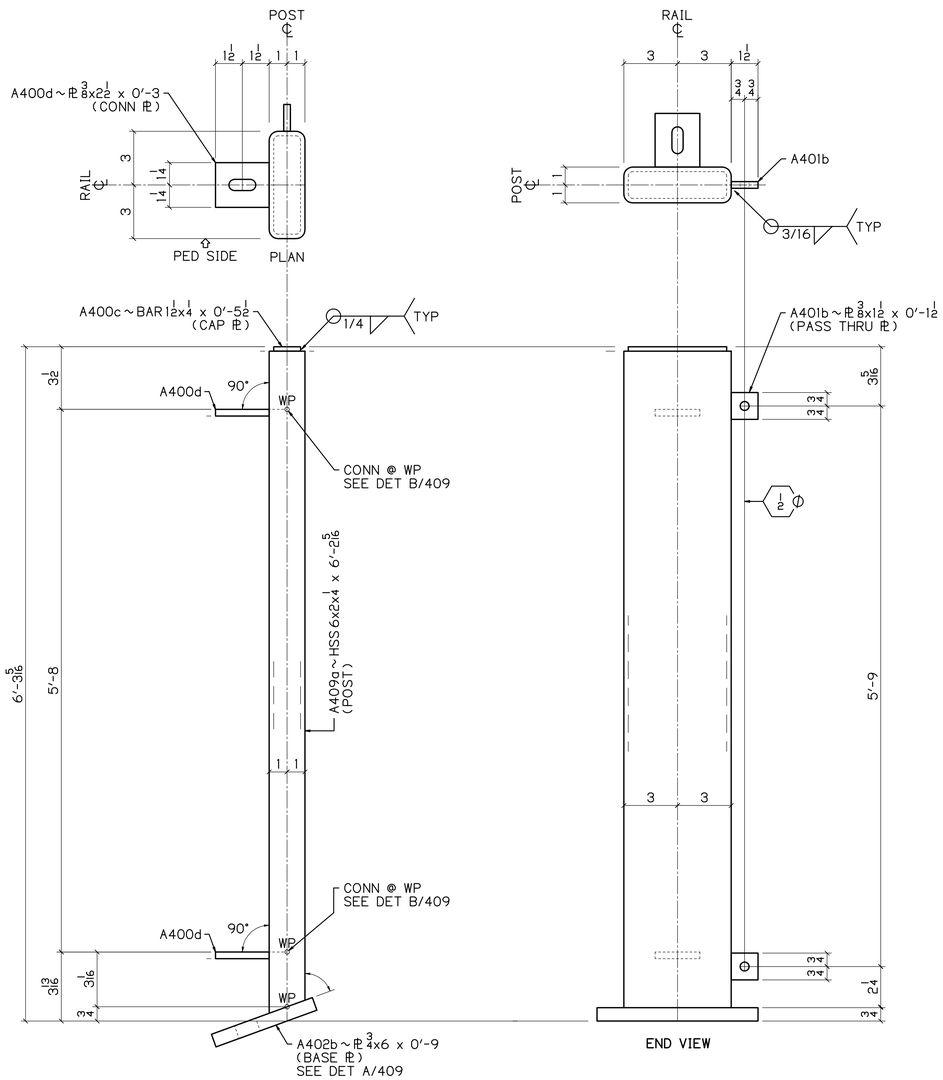

1 ~ A409

POSTS
PASS THRU
PEDESTRIAN SIDE SHOWN

0.5968" | 1/8
12

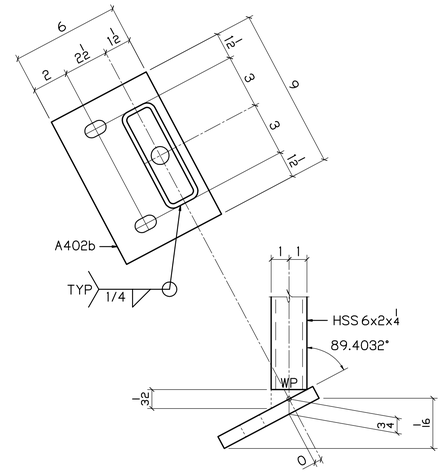

DETAIL A 409

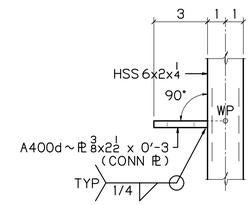

DETAIL B 409

UP

BILL OF MATERIAL

NO	MK	NO	SUBMK	MATERIAL	FT	IN	REMARKS	SORT
1	A409			POSTS				MM
		1	A409a	HSS 6x2x1/4	6	2 5/16	SC2E	TS
		1	A402b	PL 3/4x6	0	9	BASE PL	PL
		2	A401b	PL 1/2x1 1/2	0	1 1/2	PASS THRU PL	PL
		1	A400c	BAR 1 1/2x1/4	0	5 1/2	CAP PL	B
		2	A400d	PL 3/8x2 1/2	0	3	CONN PL	PL

BU-19 BLUE-GREEN LINES
100% COMPLETE 08-16-21

P.H. DREW INC.
2450 N. RACEWAY RD. - P.O. BOX 34295
INDIANAPOLIS, INDIANA 46234
PHONE : (317) 297-5152
FAX : (317) 297-5313

APPROVAL: APPROVED 08-03-21

CUY-IR490 / SR010-2.09 / 19.28

DECORATIVE FENCE

POSTS

REVISION

REV	DATE	DESCRIPTION	BY

STATE	OHIO
COUNTY	CUYAHOGA (CITY OF CLEVELAND)
PROJECT	3000 (17)
CONTRACT	PID 96833
SECTION	
STRUCTURE	
STATE JOB	

APPROVAL RECORD

DATE	ISSUED	APP DATE	APPROVAL STATUS
08-16-21	FABRICATION		

CUSTOMER	LAKE ERIE CONSTRUCTION COMPANY
CONTRACTOR	
ARCH/ENG	
REFERENCE	
ITEM	
FINISH	SEE NOTES - SHT E400

DRAWN BY	CHECKED BY	MRH NO	JOB MGR	DWG STATUS	JOB NO.	TOTAL SHEETS	SHEET
MRH 07-11-21	SRF 08-12-21	1914	JL	FABRICATION 08-16-21	19-1108		409

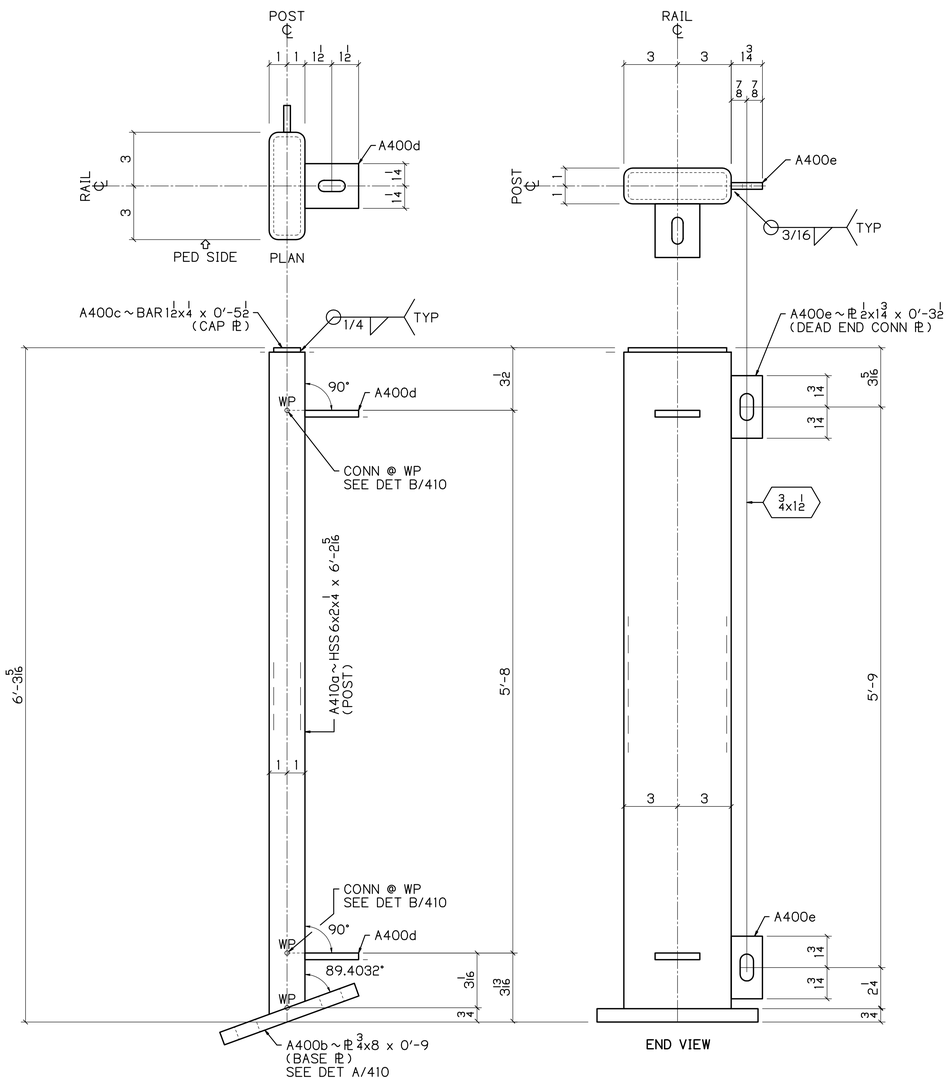

1 ~ A410

POSTS
DEAD END CONNECTION
PEDESTRIAN SIDE SHOWN

0.5968" | 1/8
12

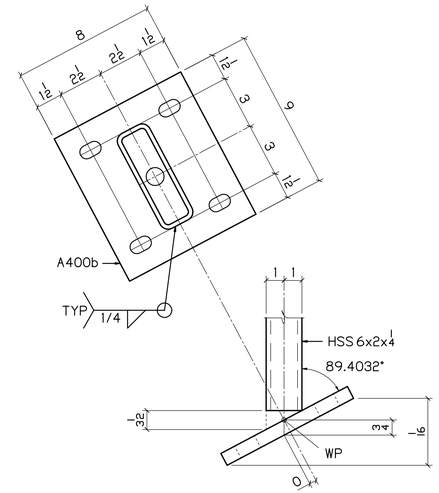

DETAIL A 410

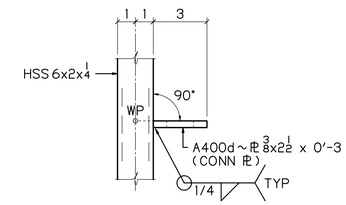

DETAIL B 410

UP

BILL OF MATERIAL

NO	MK	NO	SUBMK	MATERIAL	FT	IN	REMARKS	SORT
1	A410			POSTS				MM
		1	A410a	HSS 6x2x1/4	6	2 5/16	SC2E	TS
		1	A400b	PL 3/4x8	0	9	BASE PL	PL
		1	A400c	BAR 1 1/2x1/4	0	5 1/2	CAP PL	B
		2	A400d	PL 3/8x2 1/2	0	3	CONN PL	PL
		2	A400e	PL 1/2x1 3/4	0	3 1/2	DEAD END CONN PL	PL

BU-19 BLUE-GREEN LINES
100% COMPLETE 08-16-21

P.H. DREW INC.
2450 N. RACEWAY RD. - P.O. BOX 34295
INDIANAPOLIS, INDIANA 46234
PHONE : (317) 297-5152
FAX : (317) 297-5313

APPROVAL: APPROVED 08-03-21

CUY-IR490 / SR010-2.09 / 19.28

DECORATIVE FENCE

POSTS

REVISION	REV	DATE	DESCRIPTION	BY

STATE	OHIO
COUNTY	CUYAHOGA (CITY OF CLEVELAND)
PROJECT	3000 (17)
CONTRACT	PID 96833
SECTION	
STRUCTURE	
STATE JOB	

APPROVAL RECORD	DATE	ISSUED	APP DATE	APPROVAL STATUS
	08-16-21	FABRICATION		

CUSTOMER	LAKE ERIE CONSTRUCTION COMPANY
CONTRACTOR	
ARCH/ENG	
REFERENCE	
ITEM	
FINISH	SEE NOTES - SHT E400

DRAWN BY	CHECKED BY	MRH NO	JOB MGR	DWG STATUS	JOB NO.	TOTAL SHEETS	SHEET
MRH 07-11-21	SRF 08-12-21	1914	JL	FABRICATION 08-16-21	19-1108		410

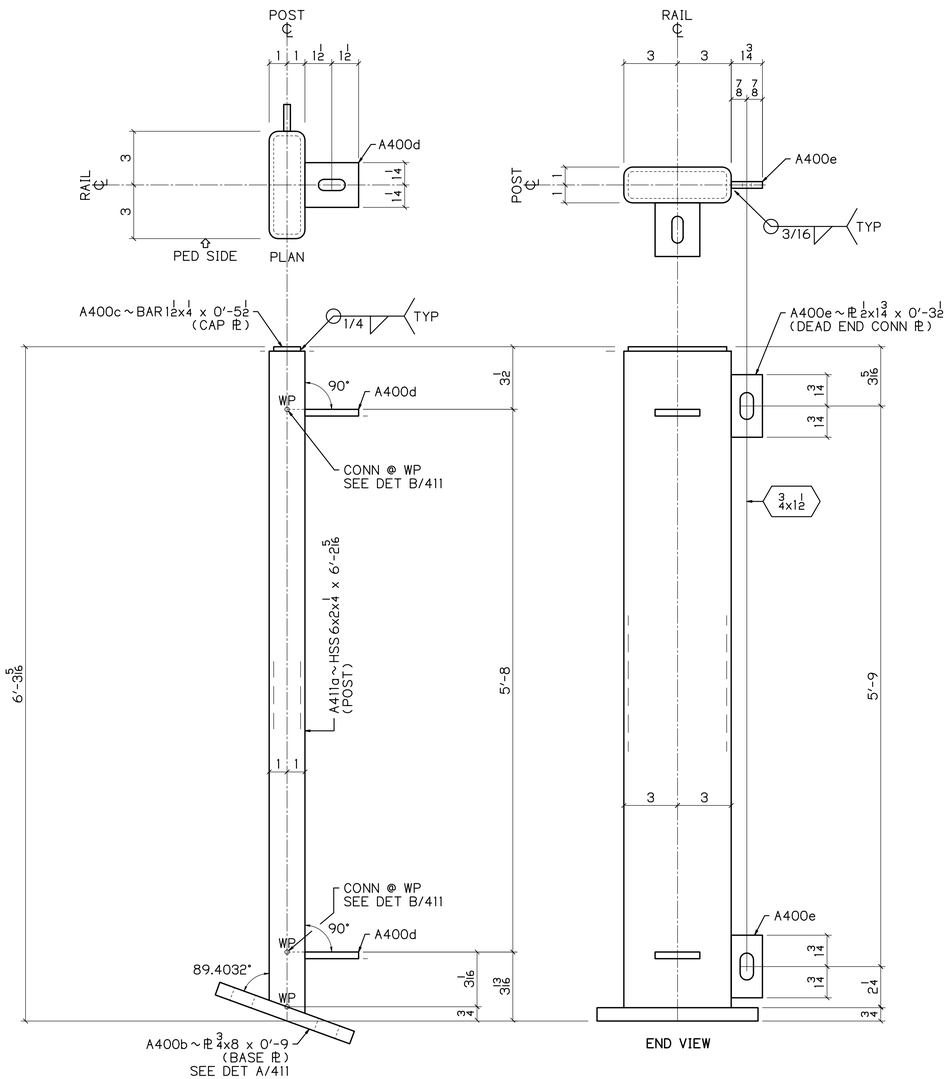

1 ~ A411

POSTS
DEAD END CONNECTION
PEDESTRIAN SIDE SHOWN

1/8 | 0.5968° / 12

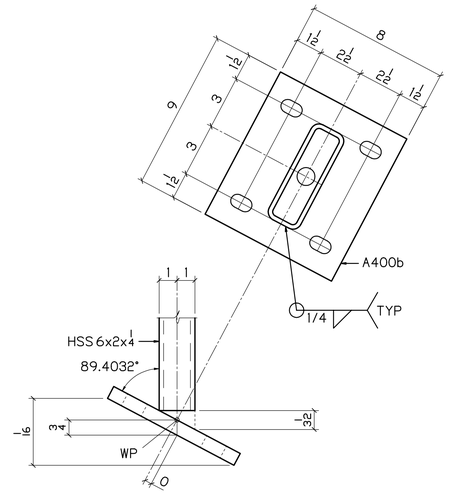

DETAIL A 411

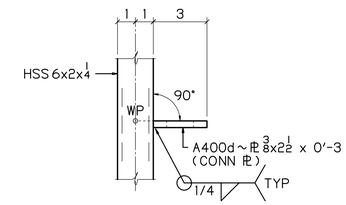

DETAIL B 411

BILL OF MATERIAL

NO	MK	NO	SUBMK	MATERIAL	FT	IN	REMARKS	SORT
1	A411			POSTS				MM
		1	A411a	HSS 6x2x1/4	6	5/16	SC2E	TS
		1	A400b	ℙ 3/4x8	0	9	BASE ℙ	PL
		1	A400c	BAR 1 1/2x1/4	0	5 1/2	CAP ℙ	B
		2	A400d	ℙ 3/8x2 1/2	0	3	CONN ℙ	PL
		2	A400e	ℙ 1/2x1 3/4	0	3 1/2	DEAD END CONN ℙ	PL

BU-19 BLUE-GREEN LINES
100% COMPLETE 08-16-21

P.H. DREW INC.
2450 N. RACEWAY RD. - P.O. BOX 34295
INDIANAPOLIS, INDIANA 46234
PHONE : (317) 297-5152
FAX : (317) 297-5313

APPROVAL: APPROVED 08-03-21

CUY-IR490 / SR010-2.09 / 19.28

DECORATIVE FENCE

POSTS

REVISION

REV	DATE	DESCRIPTION	BY

APPROVAL RECORD

DATE	ISSUED	APP DATE	APPROVAL STATUS
08-16-21	FABRICATION		

STATE	OHIO
COUNTY	CUYAHOGA (CITY OF CLEVELAND)
PROJECT	3000 (17)
CONTRACT	PID 96833
SECTION	
STRUCTURE	
STATE JOB	
CUSTOMER	LAKE ERIE CONSTRUCTION COMPANY
CONTRACTOR	
ARCH/ENG	
REFERENCE	
ITEM	
FINISH	SEE NOTES - SHT E400

DRAWN BY	CHECKED BY	MRH NO	JOB MGR	DWG STATUS	JOB NO.	TOTAL SHEETS	SHEET
MRH 07-11-21	SRF 08-12-21	1914	JL	FABRICATION 08-16-21	19-1108		411

DN

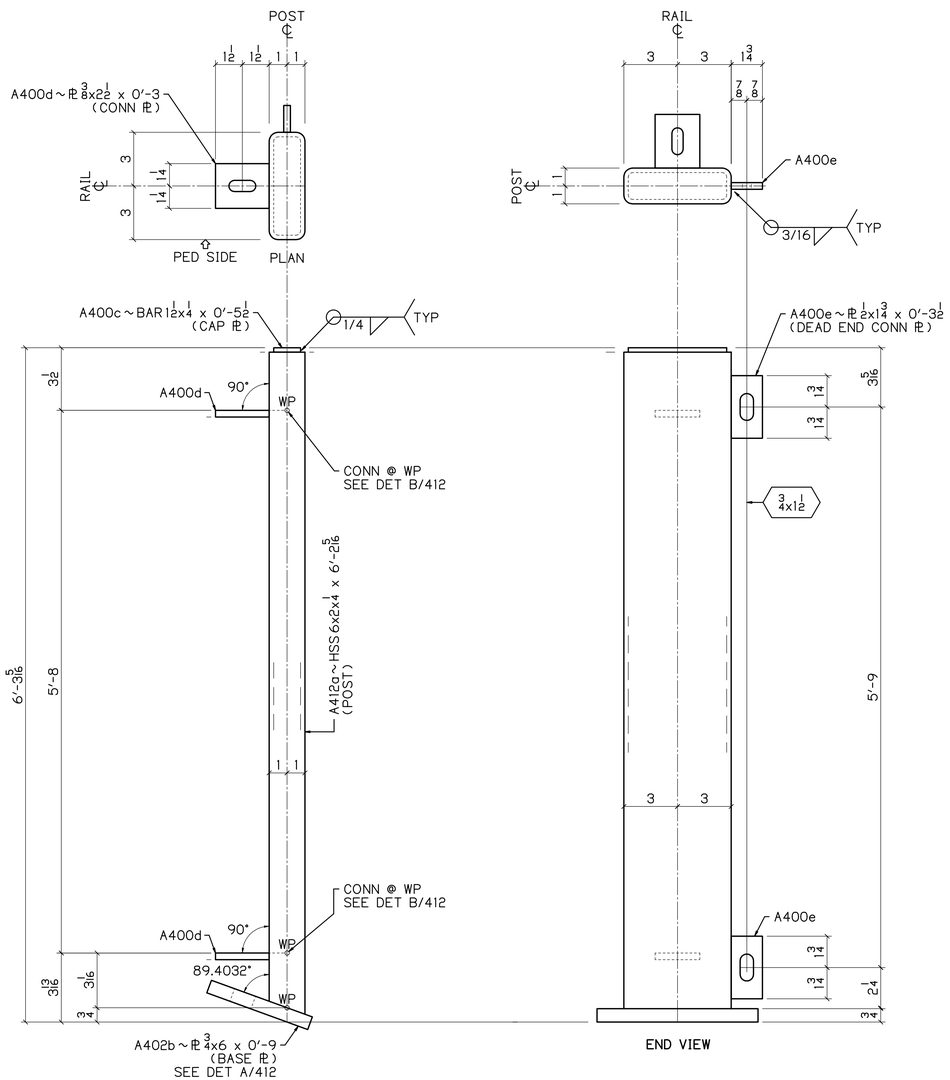

1 ~ A412

POSTS
DEAD END CONNECTION
PEDESTRIAN SIDE SHOWN

1/8 | 0.5968" / 12

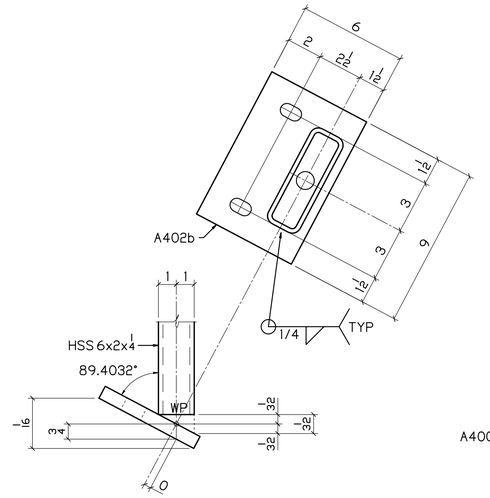

DETAIL A 412

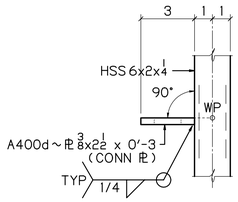

DETAIL B 412

BILL OF MATERIAL

NO	MK	NO	SUBMK	MATERIAL	FT	IN	REMARKS	SORT
1	A412			POSTS				MM
		1	A412a	HSS 6x2x1/4	6	2 5/16	SC2E	TS
		1	A402b	PL 3/4x6	0	9	BASE PL	PL
		1	A400c	BAR 1 1/2x1/4	0	5 1/2	CAP PL	B
		2	A400d	PL 3/8x2 1/2	0	3	CONN PL	PL
		2	A400e	PL 1/2x1 3/4	0	3 1/2	DEAD END CONN PL	PL

BU-19 BLUE-GREEN LINES
100% COMPLETE 08-16-21

P.H. DREW INC.
2450 N. RACEWAY RD. - P.O. BOX 34295
INDIANAPOLIS, INDIANA 46234
PHONE : (317) 297-5152
FAX : (317) 297-5313

APPROVAL: APPROVED 08-03-21

CUY-IR490 / SR010-2.09 / 19.28

DECORATIVE FENCE

POSTS

REVISION

REV	DATE	DESCRIPTION	BY

STATE	OHIO
COUNTY	CUYAHOGA (CITY OF CLEVELAND)
PROJECT	3000 (17)
CONTRACT	PID 96833
SECTION	
STRUCTURE	
STATE JOB	

APPROVAL RECORD

DATE	ISSUED	APP DATE	APPROVAL STATUS
08-16-21	FABRICATION		

CUSTOMER	LAKE ERIE CONSTRUCTION COMPANY
CONTRACTOR	
ARCH/ENG	
REFERENCE	
ITEM	
FINISH	SEE NOTES - SHT E400

DRAWN BY	CHECKED BY	MRH NO	JOB MGR	DWG STATUS	JOB NO.	TOTAL SHEETS	SHEET
MRH 07-11-21	SRF 08-12-21	1914	JL	FABRICATION 08-16-21	19-1108		412

DN

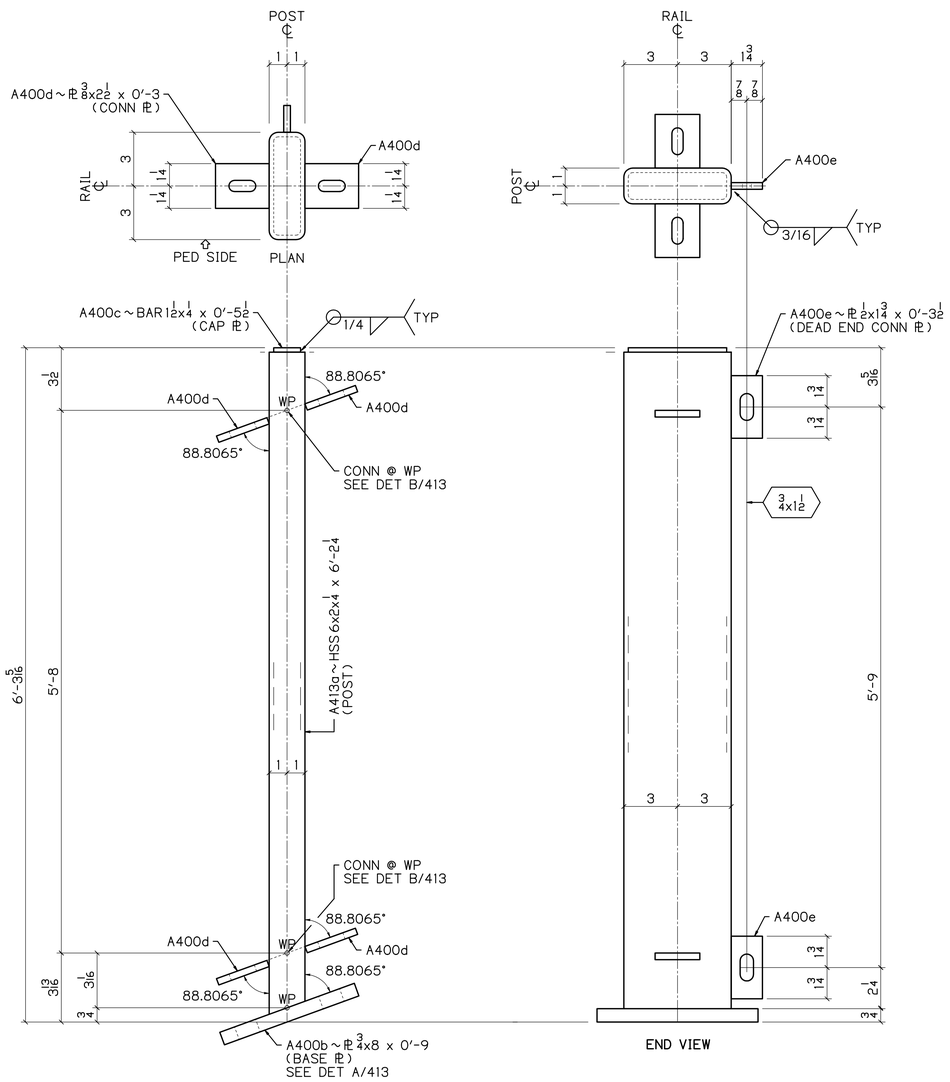

48 ~ A413
POSTS
DEAD END CONNECTION
PEDESTRIAN SIDE SHOWN

0.8952" | 3/16 / 12

1.1935" | 1/4 / 12

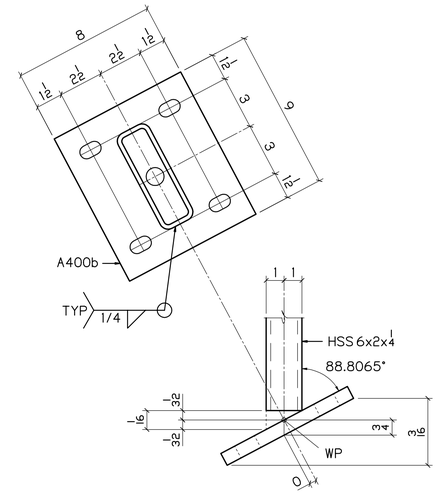

DETAIL A 413

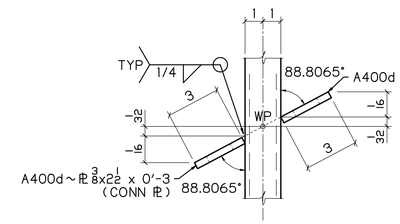

DETAIL B 413

UP

BILL OF MATERIAL

NO	MK	NO	SUBMK	MATERIAL	FT	IN	REMARKS	SORT
48	A413			POSTS				MM
		48	A413a	HSS 6x2x1/4	6	2 1/4	SC2E	TS
		48	A400b	PL 3/4x8	0	9	BASE PL	PL
		48	A400c	BAR 1 1/2x1/4	0	5 1/2	CAP PL	B
		192	A400d	PL 3/8x2 1/2	0	3	CONN PL	PL
		96	A400e	PL 1/2x1 3/4	0	3 1/2	DEAD END CONN PL	PL

BU-19 BLUE-GREEN LINES
100% COMPLETE 08-16-21

P.H. DREW INC.
2450 N. RACEWAY RD. - P.O. BOX 34295
INDIANAPOLIS, INDIANA 46234
PHONE : (317) 297-5152
FAX : (317) 297-5313

APPROVAL: APPROVED 08-03-21

CUY-IR490 / SR010-2.09 / 19.28
DECORATIVE FENCE
POSTS

REVISION	REV	DATE	DESCRIPTION	BY

STATE	OHIO
COUNTY	CUYAHOGA (CITY OF CLEVELAND)
PROJECT	3000 (17)
CONTRACT	PID 96833
SECTION	
STRUCTURE	
STATE JOB	

APPROVAL RECORD	DATE	ISSUED	APP DATE	APPROVAL STATUS
	08-16-21	FABRICATION		

CUSTOMER	LAKE ERIE CONSTRUCTION COMPANY
CONTRACTOR	
ARCH/ENG	
REFERENCE	
ITEM	
FINISH	SEE NOTES-SHT E400

DRAWN BY	CHECKED BY	MRH NO	JOB MGR	DWG STATUS	JOB NO.	TOTAL SHEETS	SHEET
MRH 07-11-21	SRF 08-12-21	1914	JL	FABRICATION 08-16-21	19-1108		413

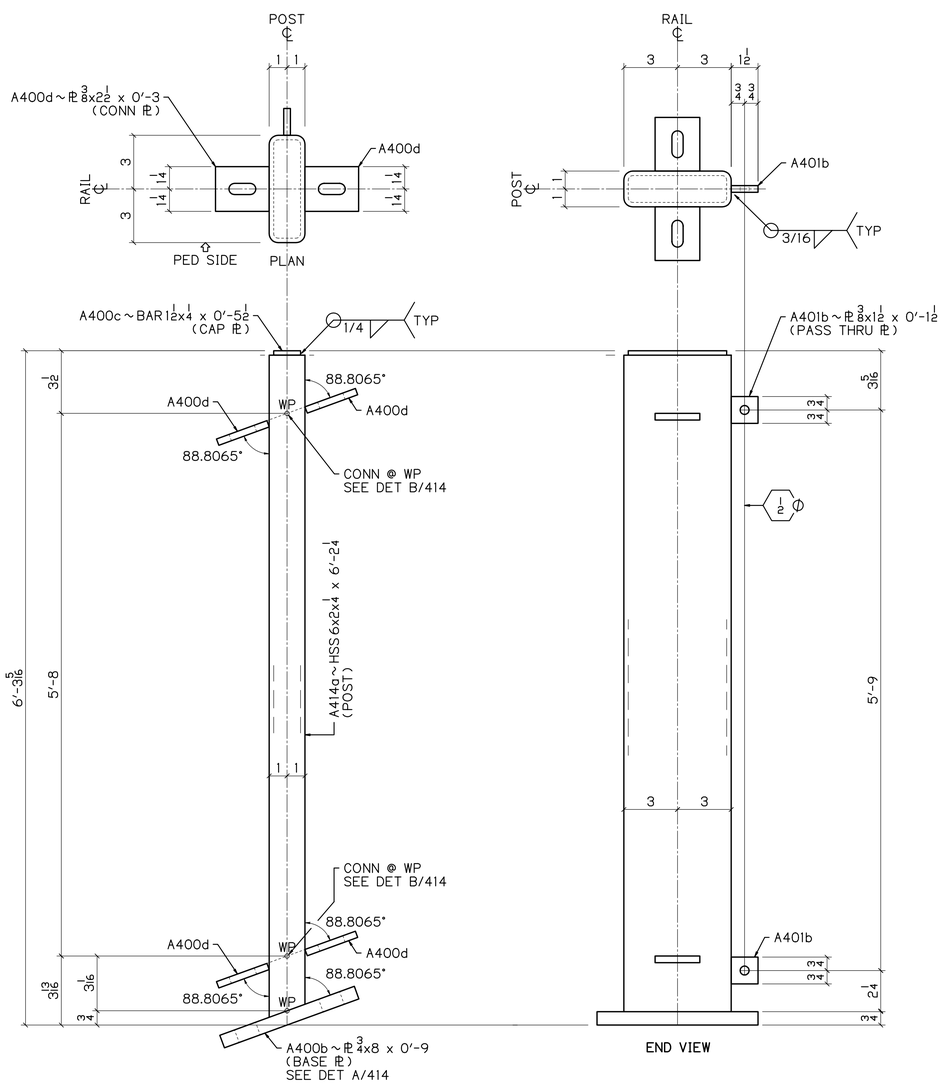

40 ~ A414

POSTS
PASS THRU
PEDESTRIAN SIDE SHOWN

0.8952° | 3/16 / 12

1.1935° | 1/4 / 12

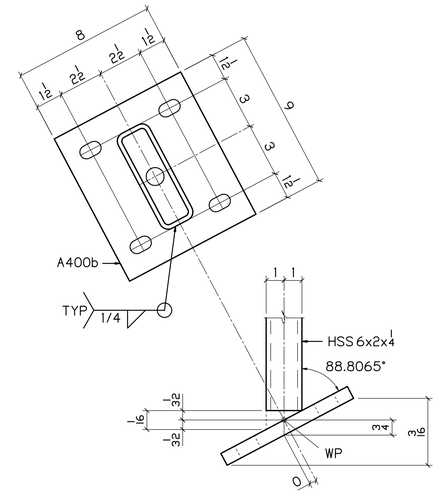

DETAIL A 414

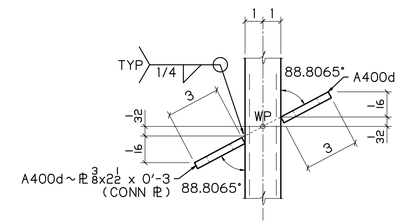

DETAIL B 414

UP

BILL OF MATERIAL

NO	MK	NO	SUBMK	MATERIAL	FT	IN	REMARKS	SORT
40	A414			POSTS				MM
		40	A414a	HSS 6x2x1/4	6	2 1/4	SC2E	TS
		80	A401b	PL 3/8x1 1/2	0	1 1/2	PASS THRU PL	PL
		40	A400b	PL 3/4x8	0	9	BASE PL	PL
		40	A400c	BAR 1 1/2x1/4	0	5 1/2	CAP PL	B
		160	A400d	PL 3/8x2 1/2	0	3	CONN PL	PL

BU-19 BLUE-GREEN LINES
100% COMPLETE 08-16-21

P.H. DREW INC.
2450 N. RACEWAY RD. - P.O. BOX 34295
INDIANAPOLIS, INDIANA 46234
PHONE : (317) 297-5152
FAX : (317) 297-5313

APPROVAL: APPROVED 08-03-21

CUY-IR490 / SR010-2.09 / 19.28

DECORATIVE FENCE

POSTS

REVISION	REV	DATE	DESCRIPTION	BY

STATE	OHIO
COUNTY	CUYAHOGA (CITY OF CLEVELAND)
PROJECT	3000 (17)
CONTRACT	PID 96833
SECTION	
STRUCTURE	
STATE JOB	

APPROVAL RECORD	DATE	ISSUED	APP DATE	APPROVAL STATUS
	08-16-21	FABRICATION		

CUSTOMER	LAKE ERIE CONSTRUCTION COMPANY
CONTRACTOR	
ARCH/ENG	
REFERENCE	
ITEM	
FINISH	SEE NOTES - SHT E400

DRAWN BY	CHECKED BY	MRH NO	JOB MGR	DWG STATUS	JOB NO.	TOTAL SHEETS	SHEET
MRH 07-11-21	SRF 08-12-21	1914	JL	FABRICATION 08-16-21	19-1108		414

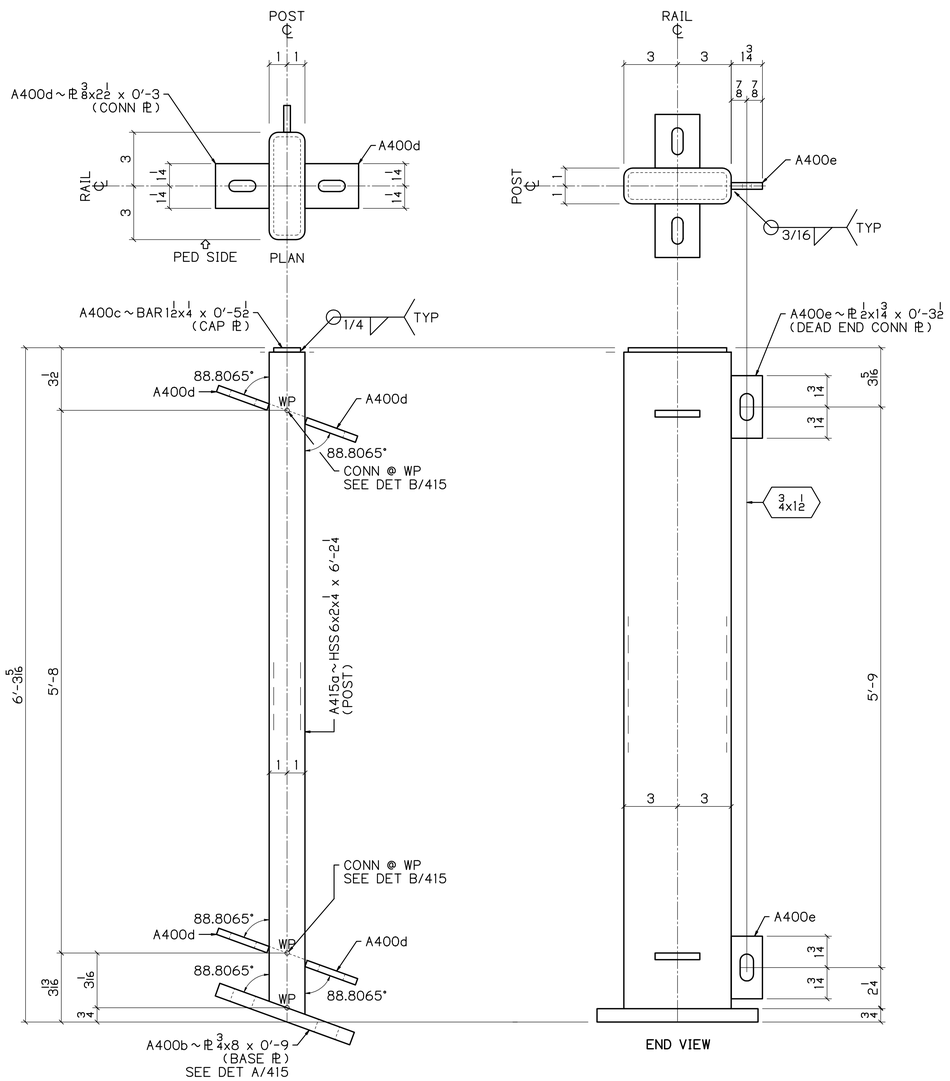

34 ~ A415

POSTS
DEAD END CONNECTION
PEDESTRIAN SIDE SHOWN

3/16 | 0.8952° / 12

1/4 | 1.1935° / 12

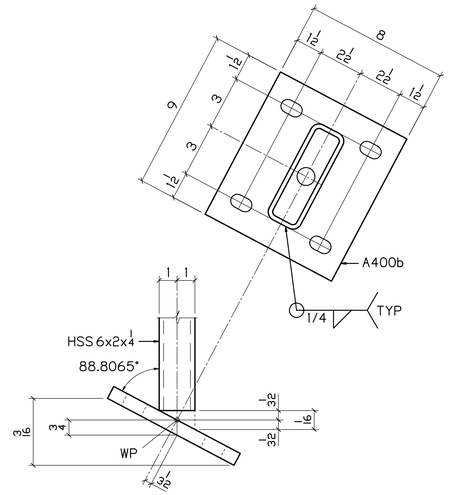

DETAIL A 415

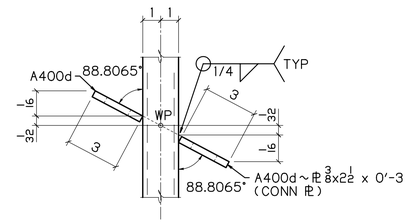

DETAIL B 415

BILL OF MATERIAL

NO	MK	NO	SUBMK	MATERIAL	FT	IN	REMARKS	SORT
34	A415			POSTS				MM
		34	A415a	HSS 6x2x1/4	6	2 1/4	SC2E	TS
		34	A400b	PL 3/4x8	0	9	BASE PL	PL
		34	A400c	BAR 1 1/2x1/4	0	5 1/2	CAP PL	B
		136	A400d	PL 3/8x2 1/2	0	3	CONN PL	PL
		68	A400e	PL 1/2x1 3/4	0	3 1/2	DEAD END CONN PL	PL

BU-19 BLUE-GREEN LINES
100% COMPLETE 08-16-21

P.H. DREW INC.
2450 N. RACEWAY RD. - P.O. BOX 34295
INDIANAPOLIS, INDIANA 46234
PHONE : (317) 297-5152
FAX : (317) 297-5313

APPROVAL: APPROVED 08-03-21

CUY-IR490 / SR010-2.09 / 19.28

DECORATIVE FENCE

POSTS

REVISION	REV	DATE	DESCRIPTION	BY

STATE	OHIO
COUNTY	CUYAHOGA (CITY OF CLEVELAND)
PROJECT	3000 (17)
CONTRACT	PID 96833
SECTION	
STRUCTURE	
STATE JOB	

APPROVAL RECORD	DATE	ISSUED	APP DATE	APPROVAL STATUS
	08-16-21	FABRICATION		

CUSTOMER	LAKE ERIE CONSTRUCTION COMPANY
CONTRACTOR	
ARCH/ENG	
REFERENCE	
ITEM	
FINISH	SEE NOTES-SHT E400

DRAWN BY	CHECKED BY	MRH NO	JOB MGR	DWG STATUS	JOB NO.	TOTAL SHEETS	SHEET
MRH 07-11-21	SRF 08-12-21	1914	JL	FABRICATION 08-16-21	19-1108		415

DN

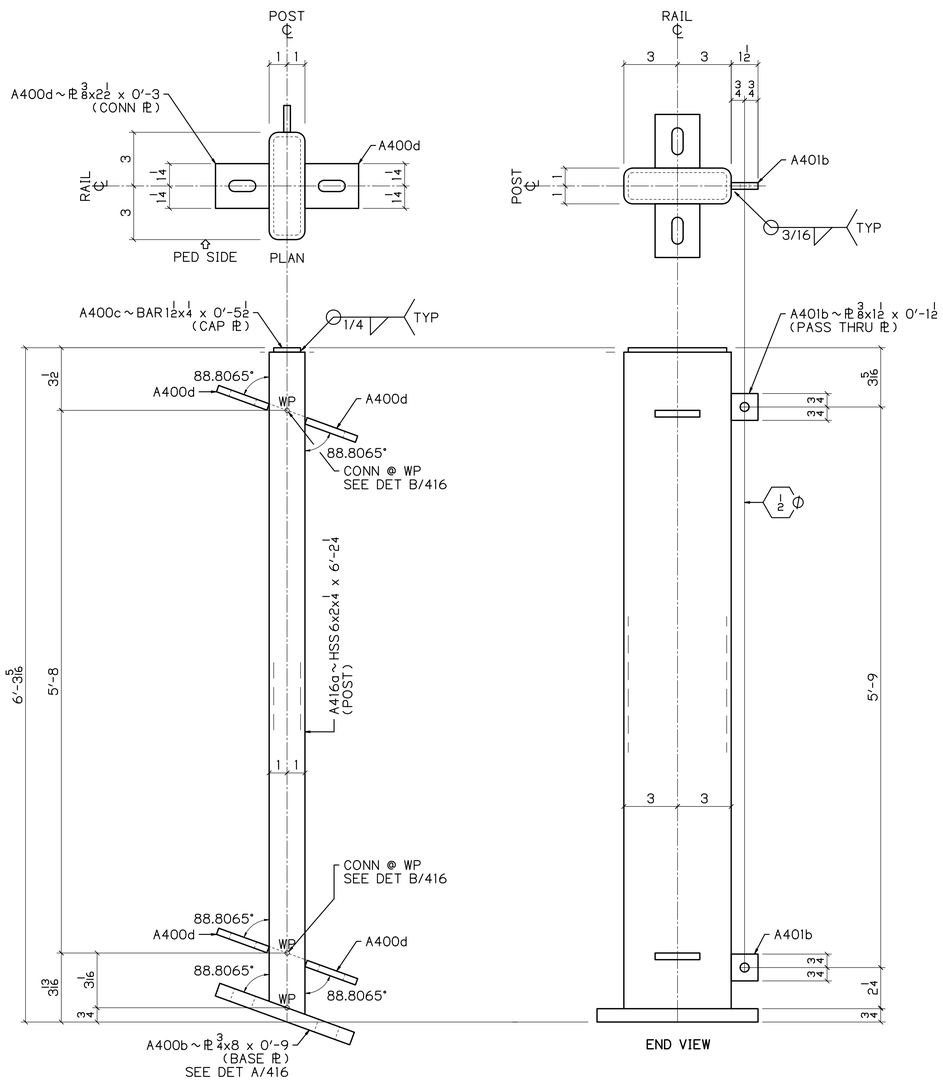

35 ~ A416
POSTS
PASS THRU
PEDESTRIAN SIDE SHOWN

3/16 | 0.8952° / 12

1/4 | 1.1935° / 12

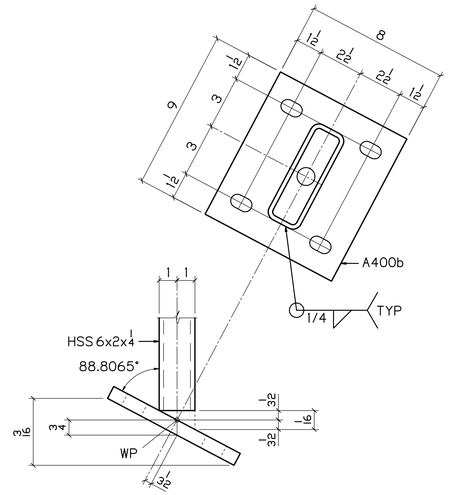

DETAIL A 416

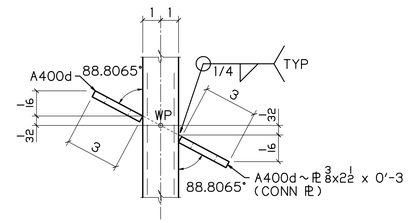

DETAIL B 416

BILL OF MATERIAL

NO	MK	NO	SUBMK	MATERIAL	FT	IN	REMARKS	SORT
35	A416			POSTS				MM
		35	A416a	HSS 6x2x1/4	6	2 1/4	SC2E	TS
		70	A401b	PL 1/2x1 1/2	0	1 1/2	PASS THRU PL	PL
		35	A400b	PL 3/4x8	0	9	BASE PL	PL
		35	A400c	BAR 1 1/2x1/4	0	5 1/2	CAP PL	B
		140	A400d	PL 3/8x2 1/2	0	3	CONN PL	PL

BU-19 BLUE-GREEN LINES
100% COMPLETE 08-16-21

P.H. DREW INC.
2450 N. RACEWAY RD. - P.O. BOX 34295
INDIANAPOLIS, INDIANA 46234
PHONE : (317) 297-5152
FAX : (317) 297-5313

APPROVAL
APPROVED 08-03-21

CUY-IR490 / SR010-2.09 / 19.28
DECORATIVE FENCE
POSTS

REVISION	REV	DATE	DESCRIPTION	BY

STATE	OHIO
COUNTY	CUYAHOGA (CITY OF CLEVELAND)
PROJECT	3000 (17)
CONTRACT	PID 96833
SECTION	
STRUCTURE	
STATE JOB	

APPROVAL RECORD	DATE	ISSUED	APP DATE	APPROVAL STATUS
	08-16-21	FABRICATION		

CUSTOMER	LAKE ERIE CONSTRUCTION COMPANY
CONTRACTOR	
ARCH/ENG	
REFERENCE	
ITEM	
FINISH	SEE NOTES-SHT E400

DRAWN BY	CHECKED BY	MRH NO	JOB MGR	DWG STATUS	JOB NO.	TOTAL SHEETS	SHEET
MRH 07-11-21	SRF 08-12-21	1914	JL	FABRICATION 08-16-21	19-1108		416

DN

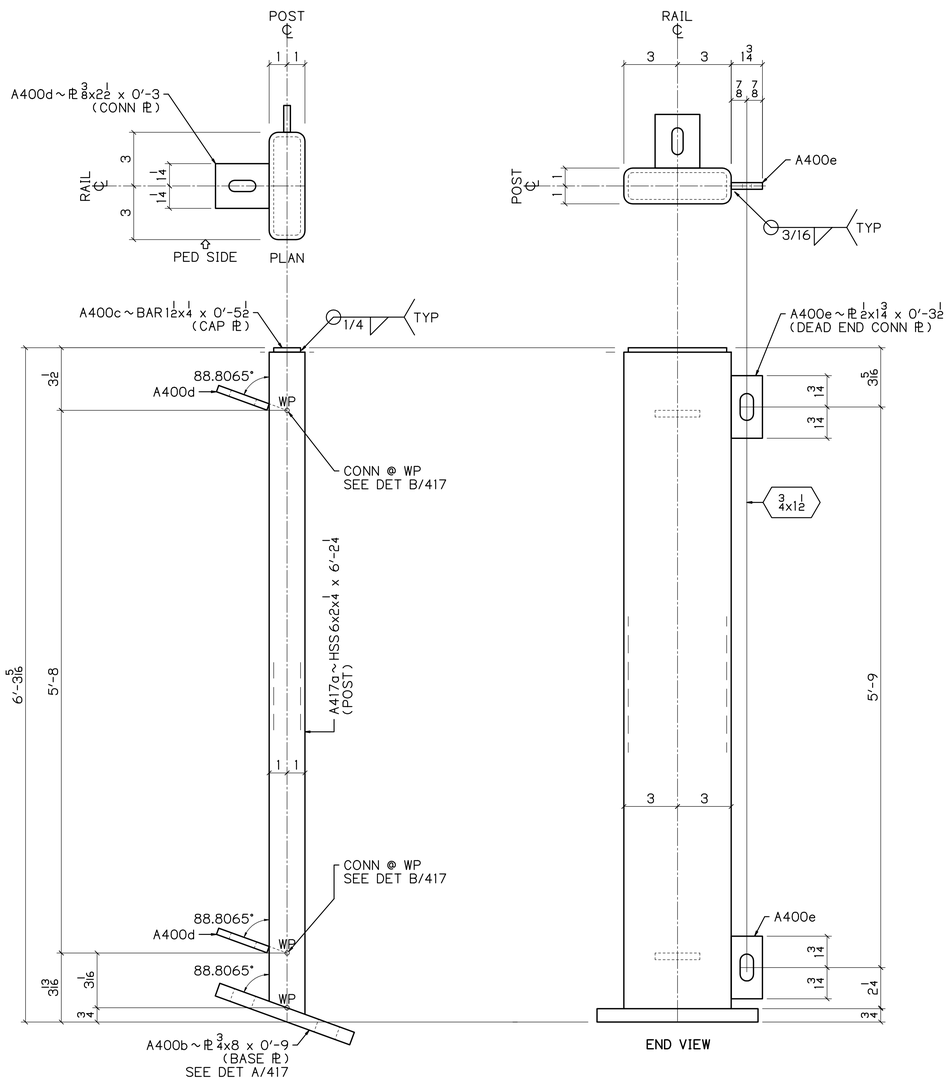

2 ~ A417

POSTS
DEAD END CONNECTION
PEDESTRIAN SIDE SHOWN

4 | 1.1935°
12

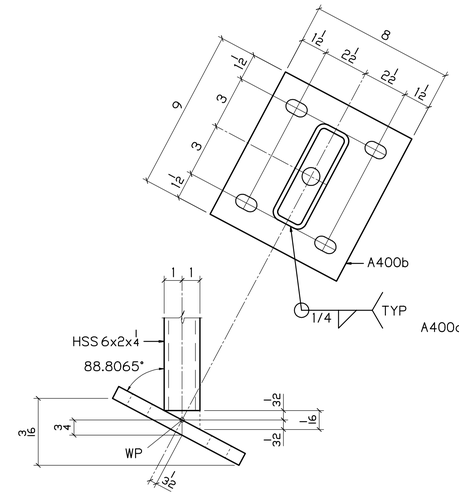

DETAIL A 417

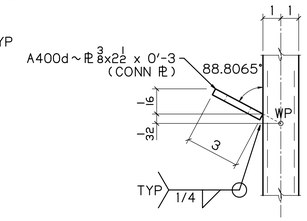

DETAIL B 417

BILL OF MATERIAL

NO	MK	NO	SUBMK	MATERIAL	FT	IN	REMARKS	SORT
2	A417			POSTS				MM
		2	A417a	HSS 6x2x1/4	6	2 1/4	SC2E	TS
		2	A400b	PL 3/4x8	0	9	BASE PL	PL
		2	A400c	BAR 1 1/2x1/4	0	5 1/2	CAP PL	B
		4	A400d	PL 3/8x2 1/2	0	3	CONN PL	PL
		4	A400e	PL 1/2x1 3/4	0	3 1/2	DEAD END CONN PL	PL

BU-19 BLUE-GREEN LINES
100% COMPLETE 08-16-21

P.H. DREW INC.
2450 N. RACEWAY RD. - P.O. BOX 34295
INDIANAPOLIS, INDIANA 46234
PHONE : (317) 297-5152
FAX : (317) 297-5313

APPROVAL: APPROVED 08-03-21

CUY-IR490 / SR010-2.09 / 19.28

DECORATIVE FENCE

POSTS

REVISION	REV	DATE	DESCRIPTION	BY

STATE	OHIO
COUNTY	CUYAHOGA (CITY OF CLEVELAND)
PROJECT	3000 (17)
CONTRACT	PID 96833
SECTION	
STRUCTURE	
STATE JOB	

APPROVAL RECORD	DATE	ISSUED	APP DATE	APPROVAL STATUS
	08-16-21	FABRICATION		

CUSTOMER	LAKE ERIE CONSTRUCTION COMPANY
CONTRACTOR	
ARCH/ENG	
REFERENCE	
ITEM	
FINISH	SEE NOTES-SHT E400

DRAWN BY	CHECKED BY	MRH NO	JOB MGR	DWG STATUS	JOB NO.	TOTAL SHEETS	SHEET
MRH 07-11-21	SRF 08-12-21	1914	JL	FABRICATION 08-16-21	19-1108		417

DN

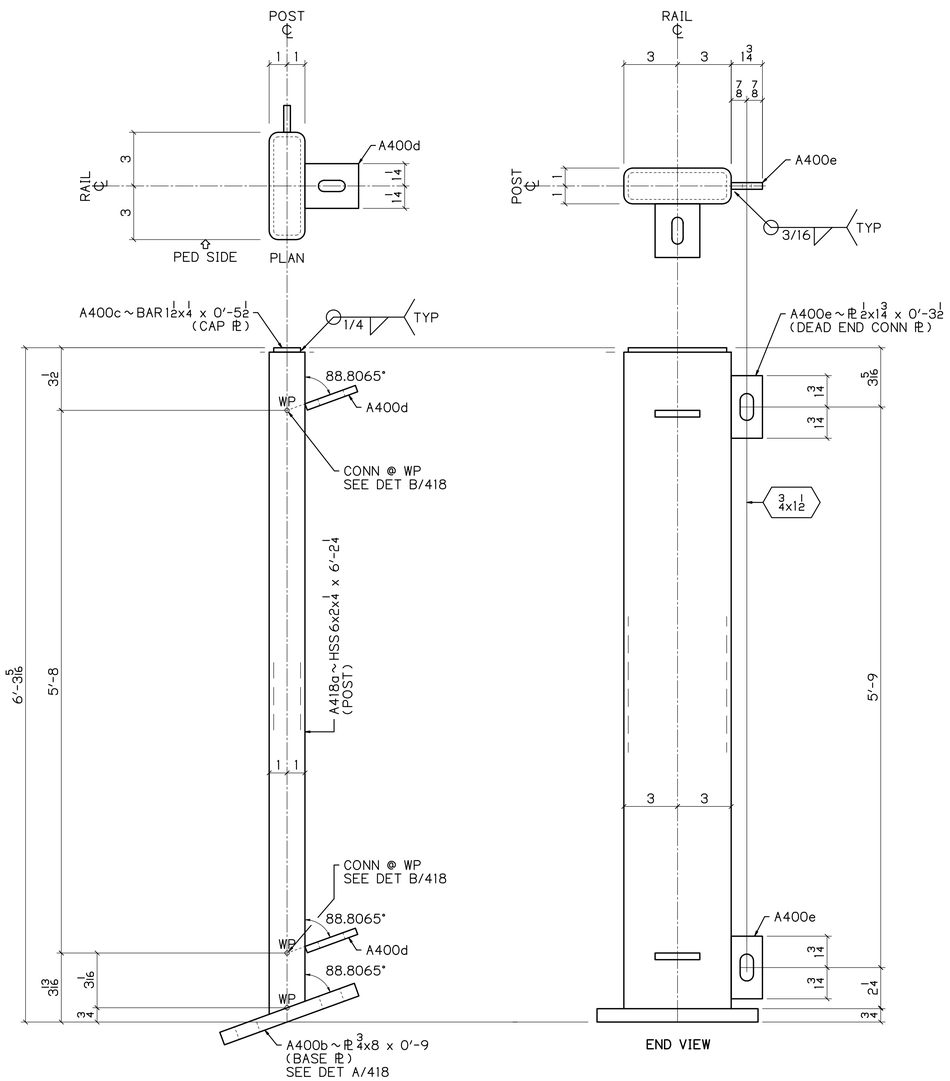

2 ~ A418

POSTS
DEAD END CONNECTION
PEDESTRIAN SIDE SHOWN

1.1935* | 1/4
12

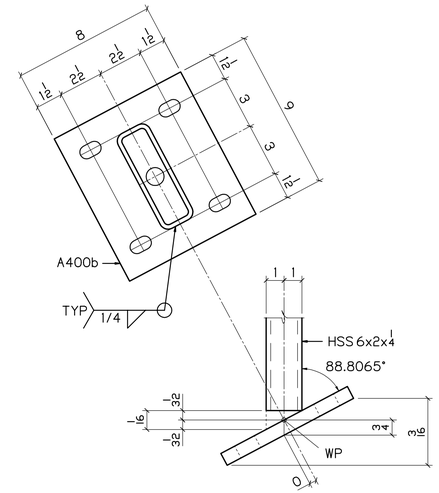

DETAIL A 418

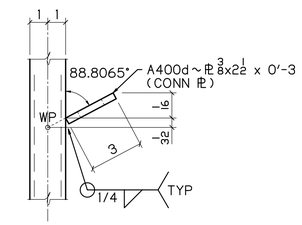

DETAIL B 418

UP

BILL OF MATERIAL

NO	MK	NO	SUBMK	MATERIAL	FT	IN	REMARKS	SORT
2	A418			POSTS				MM
		2	A418a	HSS 6x2x1/4	6	2 1/4	SC2E	TS
		2	A400b	PL 3/4x8	0	9	BASE PL	PL
		2	A400c	BAR 1 1/2x1/4	0	5 1/2	CAP PL	B
		4	A400d	PL 3/8x2 1/2	0	3	CONN PL	PL
		4	A400e	PL 1/2x1 3/4	0	3 1/2	DEAD END CONN PL	PL

BU-19 BLUE-GREEN LINES
100% COMPLETE 08-16-21

P.H. DREW INC.
2450 N. RACEWAY RD. - P.O. BOX 34295
INDIANAPOLIS, INDIANA 46234
PHONE : (317) 297-5152
FAX : (317) 297-5313

APPROVAL: APPROVED 08-03-21

CUY-IR490 / SR010-2.09 / 19.28

DECORATIVE FENCE

POSTS

REVISION	REV	DATE	DESCRIPTION	BY

STATE	OHIO
COUNTY	CUYAHOGA (CITY OF CLEVELAND)
PROJECT	3000 (17)
CONTRACT	PID 96833
SECTION	
STRUCTURE	
STATE JOB	

APPROVAL RECORD	DATE	ISSUED	APP DATE	APPROVAL STATUS
	08-16-21	FABRICATION		

CUSTOMER	LAKE ERIE CONSTRUCTION COMPANY
CONTRACTOR	
ARCH/ENG	
REFERENCE	
ITEM	
FINISH	SEE NOTES - SHT E400

DRAWN BY	CHECKED BY	MRH NO	JOB MGR	DWG STATUS	JOB NO.	TOTAL SHEETS	SHEET
MRH 07-11-21	SRF 08-12-21	1914	JL	FABRICATION 08-16-21	19-1108		418

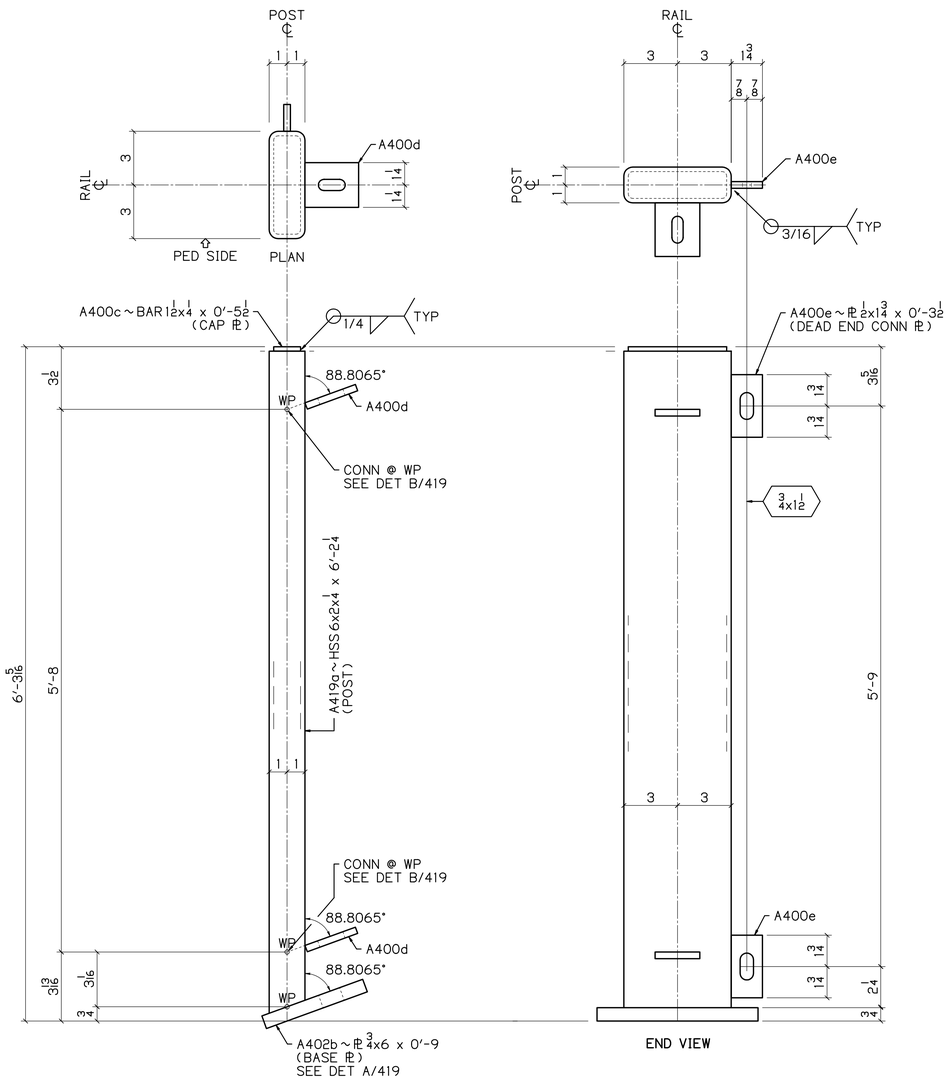

1 ~ A419

POSTS
DEAD END CONNECTION
PEDESTRIAN SIDE SHOWN

1.1935* | 1/4
12

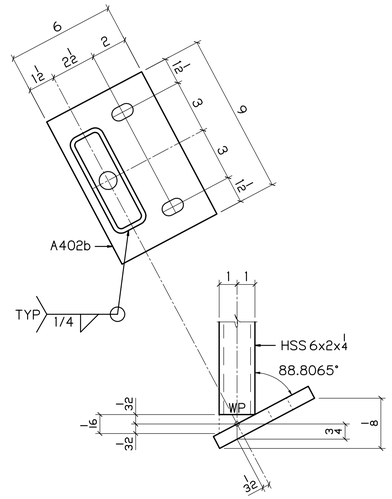

DETAIL A 419

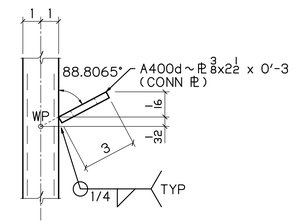

DETAIL B 419

BILL OF MATERIAL

NO	MK	NO	SUBMK	MATERIAL	FT	IN	REMARKS	SORT
1	A419			POSTS				MM
		1	A419a	HSS 6x2x1/4	6	2 1/4	SC2E	TS
		1	A402b	PL 3/4x6	0	9	BASE PL	PL
		1	A400c	BAR 1 1/2x1/4	0	5 1/2	CAP PL	B
		2	A400d	PL 3/8x2 1/2	0	3	CONN PL	PL
		2	A400e	PL 1/2x1 3/4	0	3 1/2	DEAD END CONN PL	PL

BU-19 BLUE-GREEN LINES
100% COMPLETE 08-16-21

P.H. DREW INC.
2450 N. RACEWAY RD. - P.O. BOX 34295
INDIANAPOLIS, INDIANA 46234
PHONE : (317) 297-5152
FAX : (317) 297-5313

APPROVAL
APPROVED 08-03-21

CUY-IR490 / SR010-2.09 / 19.28

DECORATIVE FENCE

POSTS

REVISION	REV	DATE	DESCRIPTION	BY

STATE	OHIO
COUNTY	CUYAHOGA (CITY OF CLEVELAND)
PROJECT	3000 (17)
CONTRACT	PID 96833
SECTION	
STRUCTURE	
STATE JOB	

APPROVAL RECORD	DATE	ISSUED	APP DATE	APPROVAL STATUS
	08-16-21	FABRICATION		

CUSTOMER	LAKE ERIE CONSTRUCTION COMPANY
CONTRACTOR	
ARCH/ENG	
REFERENCE	
ITEM	
FINISH	SEE NOTES - SHT E400

DRAWN BY	CHECKED BY	MRH NO	JOB MGR	DWG STATUS	JOB NO.	TOTAL SHEETS	SHEET
MRH 07-11-21	SRF 08-12-21	1914	JL	FABRICATION 08-16-21	19-1108		419

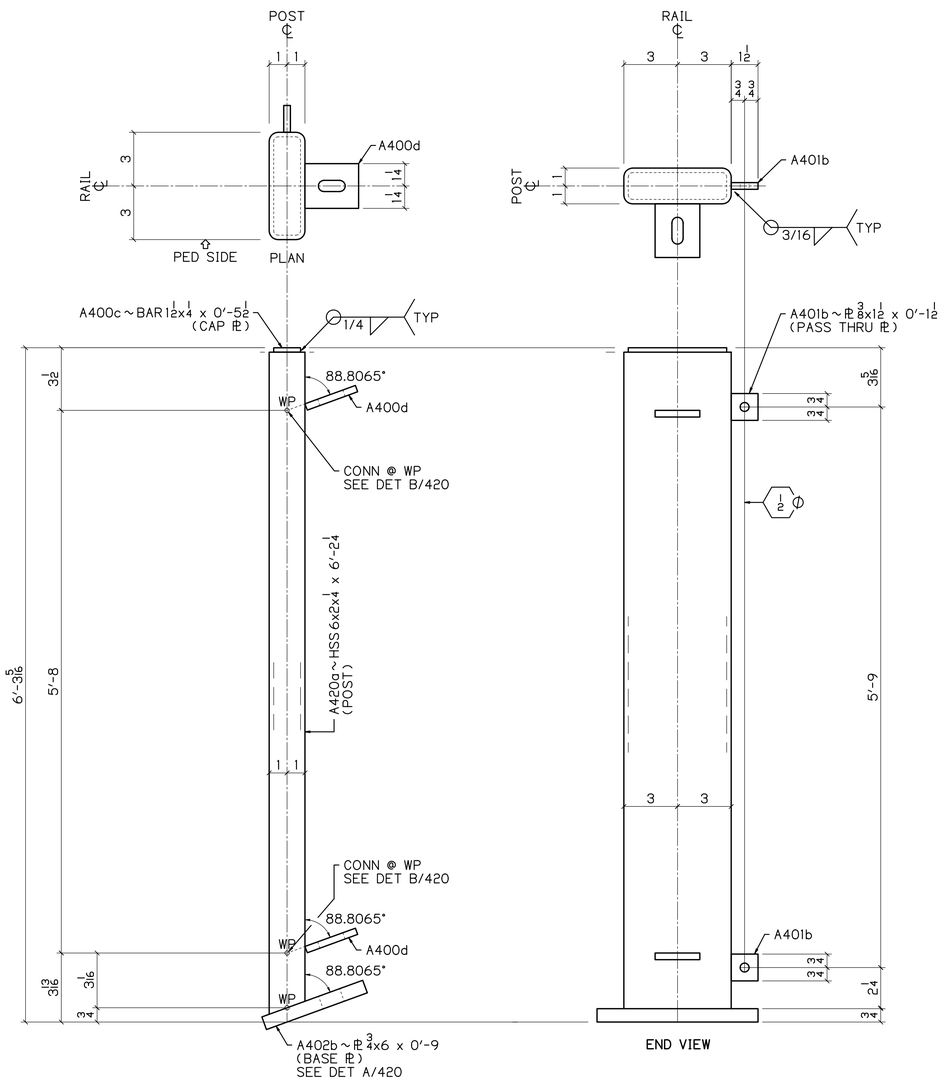

6 ~ A420

POSTS
PASS THRU
PEDESTRIAN SIDE SHOWN

0.8952° | 3/16 / 12

1.1935° | 1/4 / 12

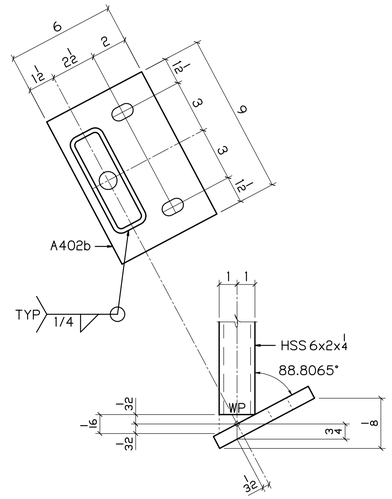

DETAIL A / 420

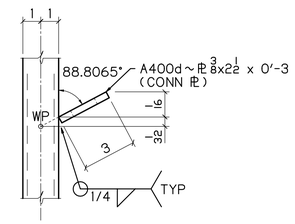

DETAIL B / 420

UP

BILL OF MATERIAL

NO	MK	NO	SUBMK	MATERIAL	FT	IN	REMARKS	SORT
6	A420			POSTS				MM
		6	A420a	HSS 6x2x1/4	6	1/4	SC2E	TS
		6	A402b	PL 3/4x6	0	9	BASE PL	PL
		12	A401b	PL 1/2x1 1/2	0	1 1/2	PASS THRU PL	PL
		6	A400c	BAR 1 1/2x1/4	0	5 1/2	CAP PL	B
		12	A400d	PL 3/8x2 1/2	0	3	CONN PL	PL

BU-19 BLUE-GREEN LINES
100% COMPLETE 08-16-21

P.H. DREW INC.
2450 N. RACEWAY RD. - P.O. BOX 34295
INDIANAPOLIS, INDIANA 46234
PHONE : (317) 297-5152
FAX : (317) 297-5313

APPROVAL: APPROVED 08-03-21

CUY-IR490 / SR010-2.09 / 19.28

DECORATIVE FENCE

POSTS

REVISION

REV	DATE	DESCRIPTION	BY

STATE	OHIO
COUNTY	CUYAHOGA (CITY OF CLEVELAND)
PROJECT	3000 (17)
CONTRACT	PID 96833
SECTION	
STRUCTURE	
STATE JOB	

APPROVAL RECORD

DATE	ISSUED	APP DATE	APPROVAL STATUS
08-16-21	FABRICATION		

CUSTOMER	LAKE ERIE CONSTRUCTION COMPANY
CONTRACTOR	
ARCH/ENG	
REFERENCE	
ITEM	
FINISH	SEE NOTES - SHT E400

DRAWN BY	CHECKED BY	MRH NO	JOB MGR	DWG STATUS	JOB NO.	TOTAL SHEETS	SHEET
MRH 07-11-21	SRF 08-12-21	1914	JL	FABRICATION 08-16-21	19-1108		420

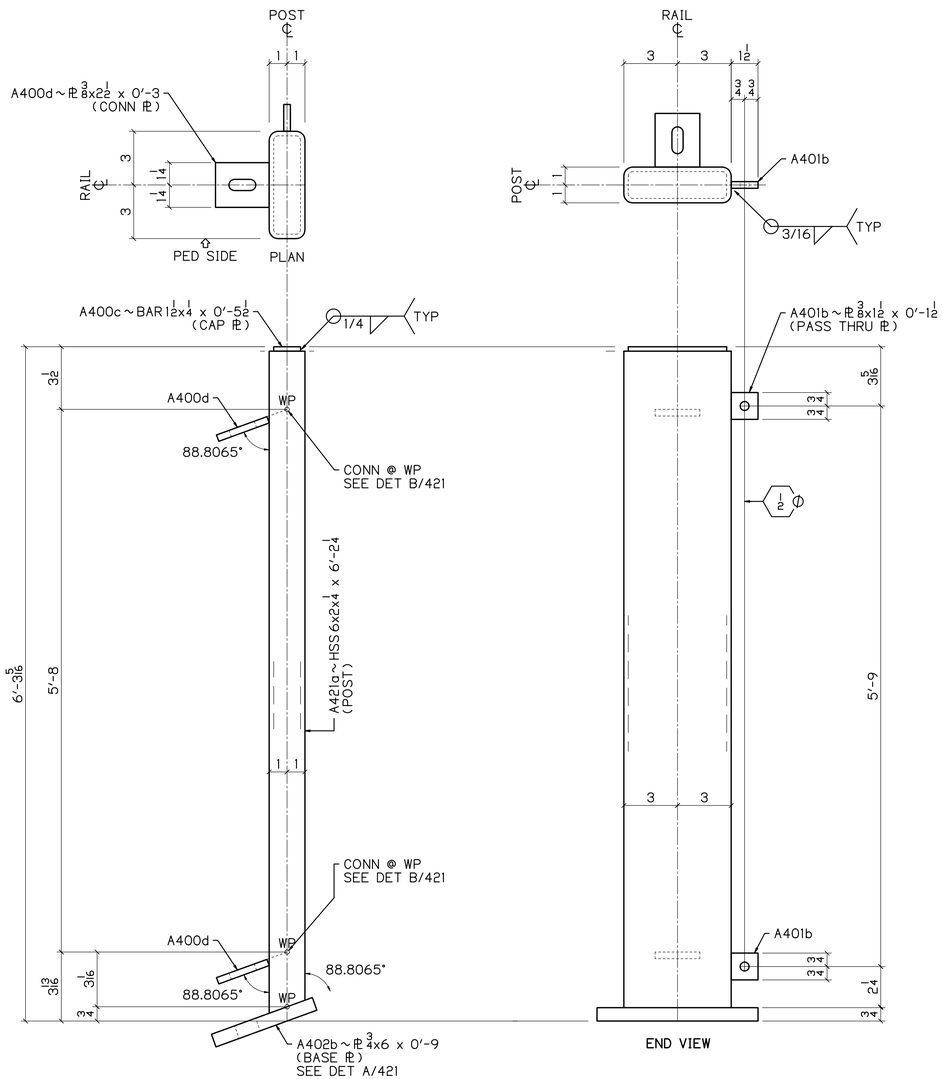

7 ~ A421
POSTS
PASS THRU
PEDESTRIAN SIDE SHOWN

0.8952* | 3/16
12

1.1935* | 1/4
12

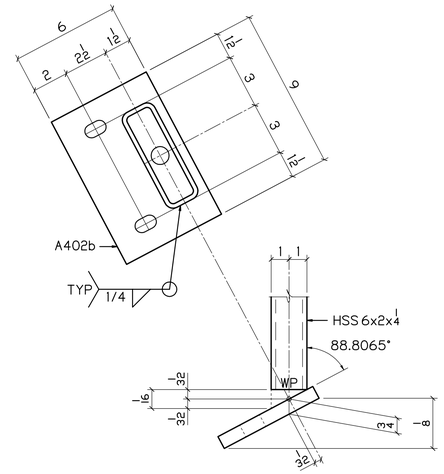

DETAIL A 421

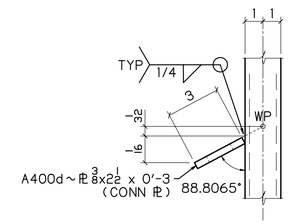

DETAIL B 421

UP

BILL OF MATERIAL

NO	MK	NO	SUBMK	MATERIAL	FT	IN	REMARKS	SORT
7	A421			POSTS				MM
		7	A421a	HSS 6x2x1/4	6	2 1/4	SC2E	TS
		7	A402b	PL 3/4x6	0	9	BASE PL	PL
		14	A401b	PL 1/2x1 1/2	0	1 1/2	PASS THRU PL	PL
		7	A400c	BAR 1 1/2x1/4	0	5 1/2	CAP PL	B
		14	A400d	PL 3/8x2 1/2	0	3	CONN PL	PL

BU-19 BLUE-GREEN LINES
100% COMPLETE 08-16-21

P.H. DREW INC.
2450 N. RACEWAY RD. - P.O. BOX 34295
INDIANAPOLIS, INDIANA 46234
PHONE : (317) 297-5152
FAX : (317) 297-5313

APPROVAL
APPROVED 08-03-21

CUY-IR490 / SR010-2.09 / 19.28

DECORATIVE FENCE

POSTS

REVISION	REV	DATE	DESCRIPTION	BY

STATE	OHIO
COUNTY	CUYAHOGA (CITY OF CLEVELAND)
PROJECT	3000 (17)
CONTRACT	PID 96833
SECTION	
STRUCTURE	
STATE JOB	

APPROVAL RECORD	DATE	ISSUED	APP DATE	APPROVAL STATUS
	08-16-21	FABRICATION		

CUSTOMER	LAKE ERIE CONSTRUCTION COMPANY
CONTRACTOR	
ARCH/ENG	
REFERENCE	
ITEM	
FINISH	SEE NOTES-SHT E400

DRAWN BY	CHECKED BY	MRH NO	JOB MGR	DWG STATUS	JOB NO.	TOTAL SHEETS	SHEET
MRH 07-11-21	SRF 08-12-21	1914	JL	FABRICATION 08-16-21	19-1108		421

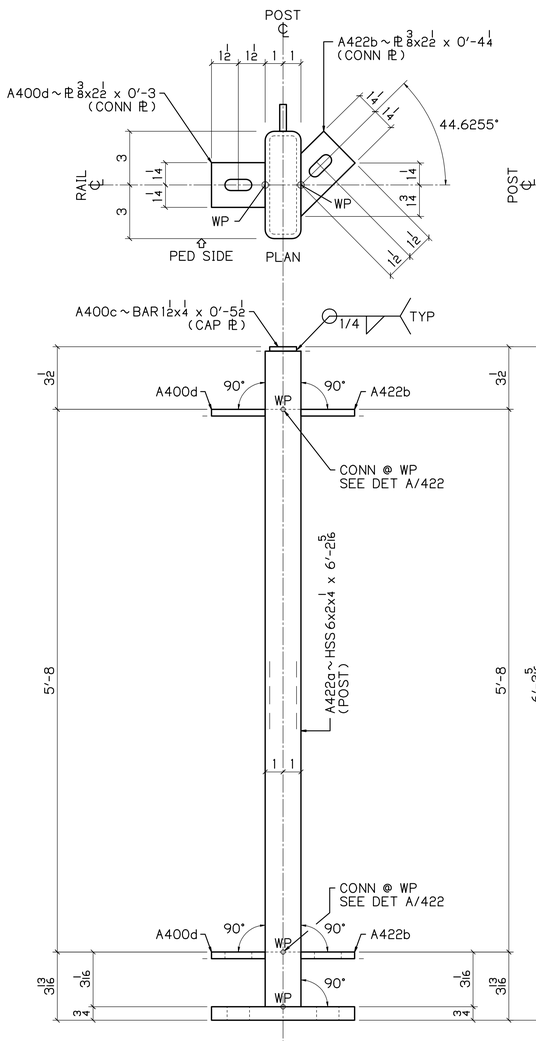

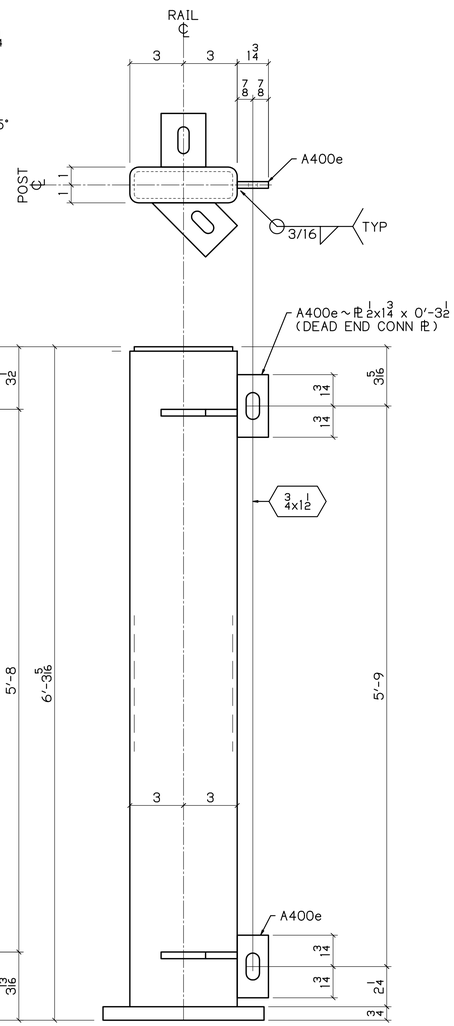

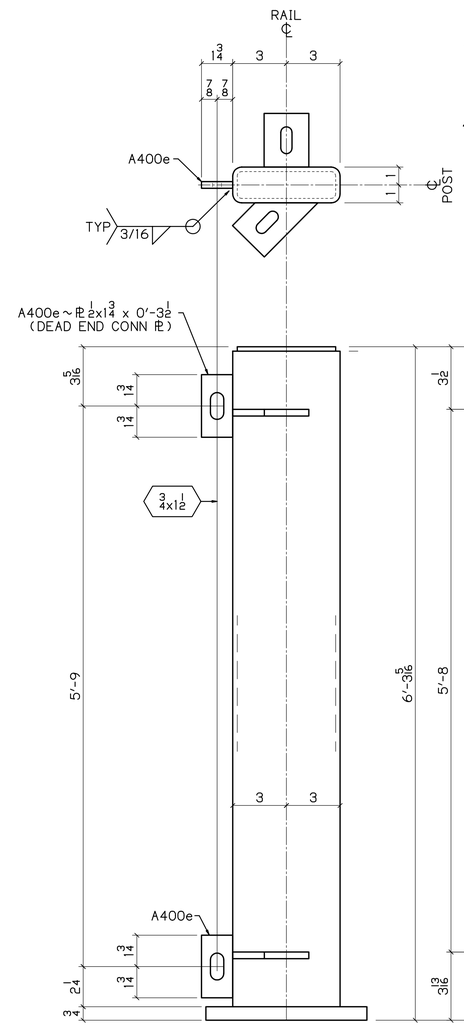

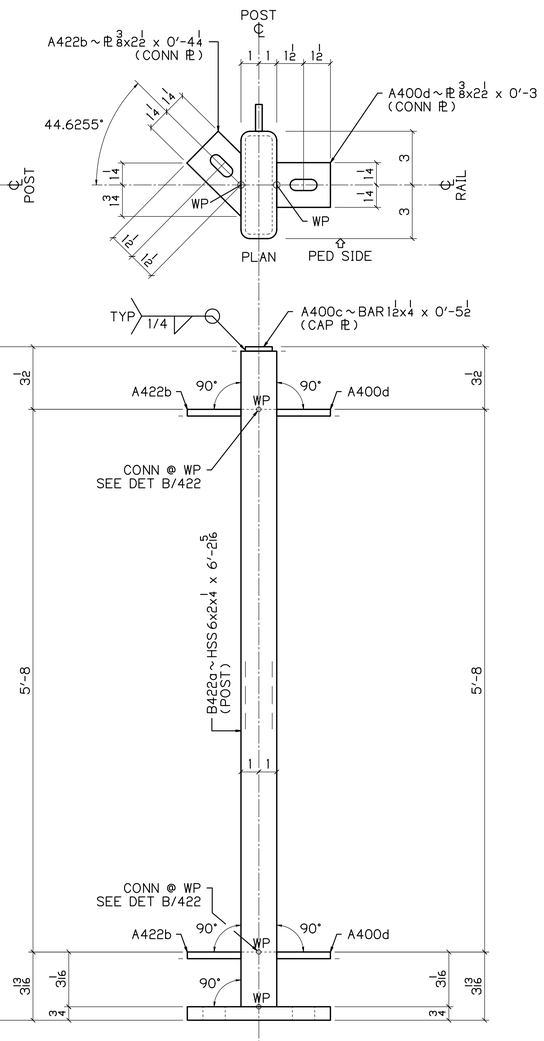

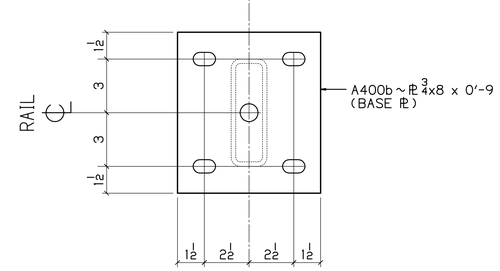

1 ~ A422
POSTS
DEAD END CONNECTION
PEDESTRIAN SIDE SHOWN

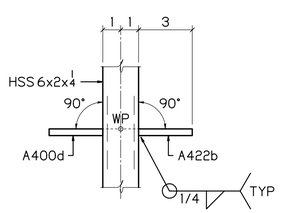

DETAIL A 422

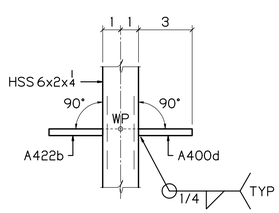

DETAIL B 422

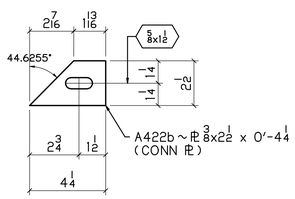

DETAIL OF A422b
CONN PL

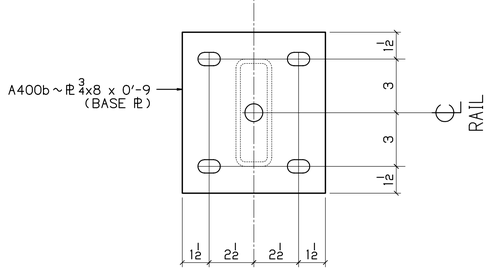

1 ~ B422
POSTS
DEAD END CONNECTION
PEDESTRIAN SIDE SHOWN

BILL OF MATERIAL

NO	MK	NO	SUBMK	MATERIAL	FT	IN	REMARKS	SORT
1	A422			END POST				MM
		1	A422a	HSS 6x2x1/4	6	2 5/16	SC2E	TS
		2	A422b	PL 3/8x2 1/2	0	4 1/4	CONN PL	PL
		1	A400b	PL 3/4x8	0	9	BASE PL	PL
		1	A400c	BAR 1 1/2x1/4	0	5 1/2	CAP PL	B
		2	A400d	PL 3/8x2 1/2	0	3	CONN PL	PL
		2	A400e	PL 1/2x1 3/4	0	3 1/2	DEAD END CONN PL	PL
1	B422			END POST				MM
		1	B422a	HSS 6x2x1/4	6	2 5/16	SC2E	TS
		2	A422b	PL 3/8x2 1/2	0	4 1/4	CONN PL	PL
		1	A400b	PL 3/4x8	0	9	BASE PL	PL
		1	A400c	BAR 1 1/2x1/4	0	5 1/2	CAP PL	B
		2	A400d	PL 3/8x2 1/2	0	3	CONN PL	PL
		2	A400e	PL 1/2x1 3/4	0	3 1/2	DEAD END CONN PL	PL

BU-19 BLUE-GREEN LINES
100% COMPLETE 08-16-21

P.H. DREW INC.
2450 N. RACEWAY RD. - P.O. BOX 34295
INDIANAPOLIS, INDIANA 46234
PHONE : (317) 297-5152
FAX : (317) 297-5313

APPROVAL
APPROVED 08-03-21

CUY-IR490 / SR010-2.09 / 19.28
DECORATIVE FENCE
POSTS

REVISION

REV	DATE	DESCRIPTION	BY

APPROVAL RECORD

DATE	ISSUED	APP DATE	APPROVAL STATUS
08-16-21	FABRICATION		

STATE	OHIO
COUNTY	CUYAHOGA (CITY OF CLEVELAND)
PROJECT	3000 (17)
CONTRACT	PID 96833
SECTION	
STRUCTURE	
STATE JOB	
CUSTOMER	LAKE ERIE CONSTRUCTION COMPANY
CONTRACTOR	
ARCH/ENG	
REFERENCE	
ITEM	
FINISH	SEE NOTES-SHT E400

DRAWN BY	CHECKED BY	MRH NO	JOB MGR	DWG STATUS	JOB NO.	TOTAL SHEETS	SHEET
MRH 07-11-21	SRF 08-12-21	1914	JL	FABRICATION 08-16-21	19-1108		422

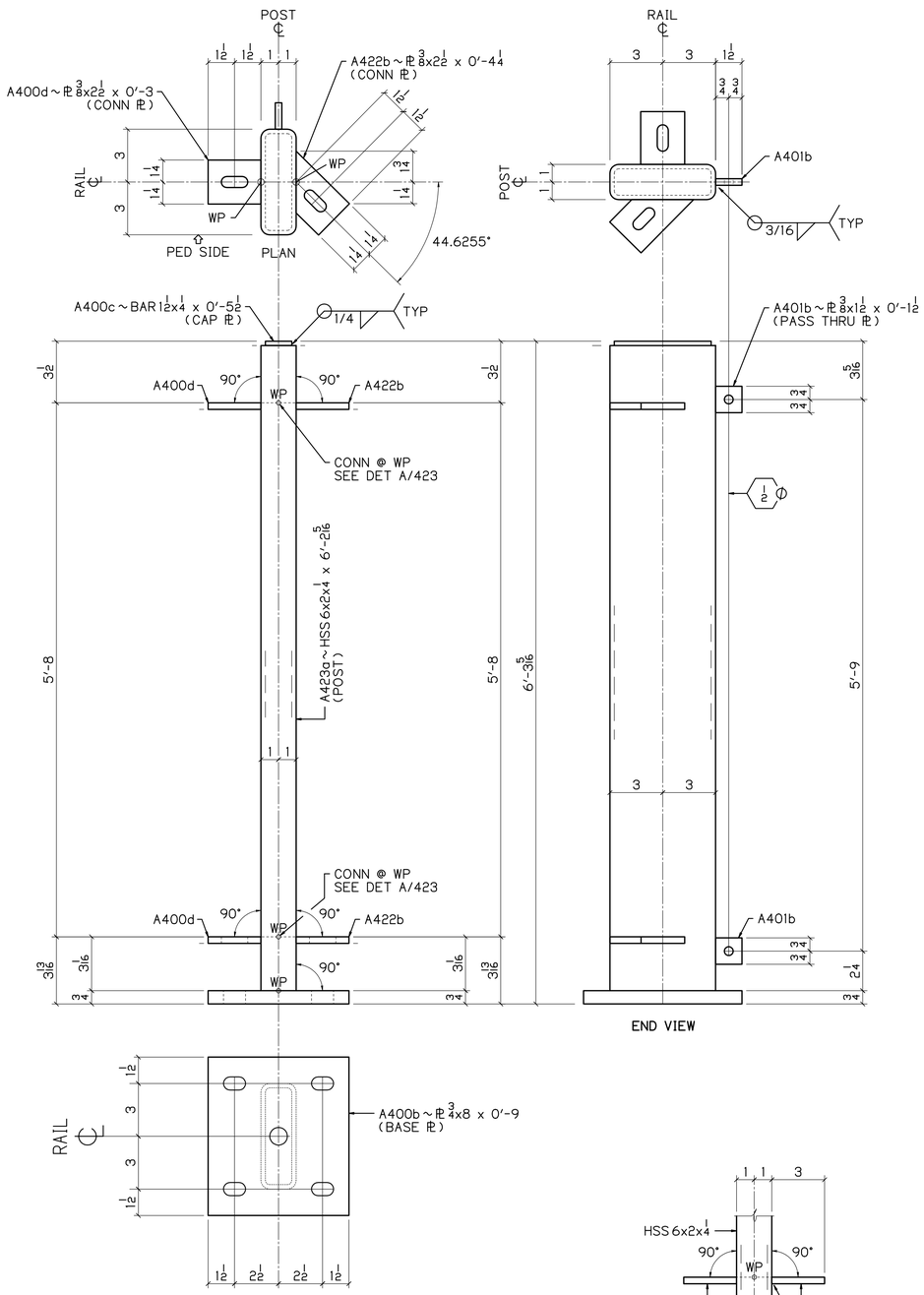

1 ~ A423

POSTS
PASS THRU
PEDESTRIAN SIDE SHOWN

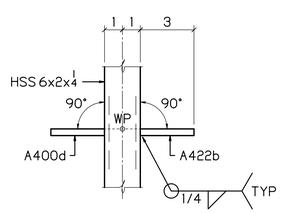

DETAIL A 423

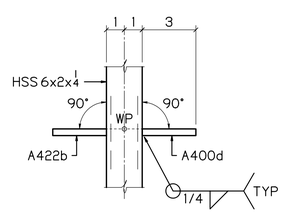

DETAIL B 423

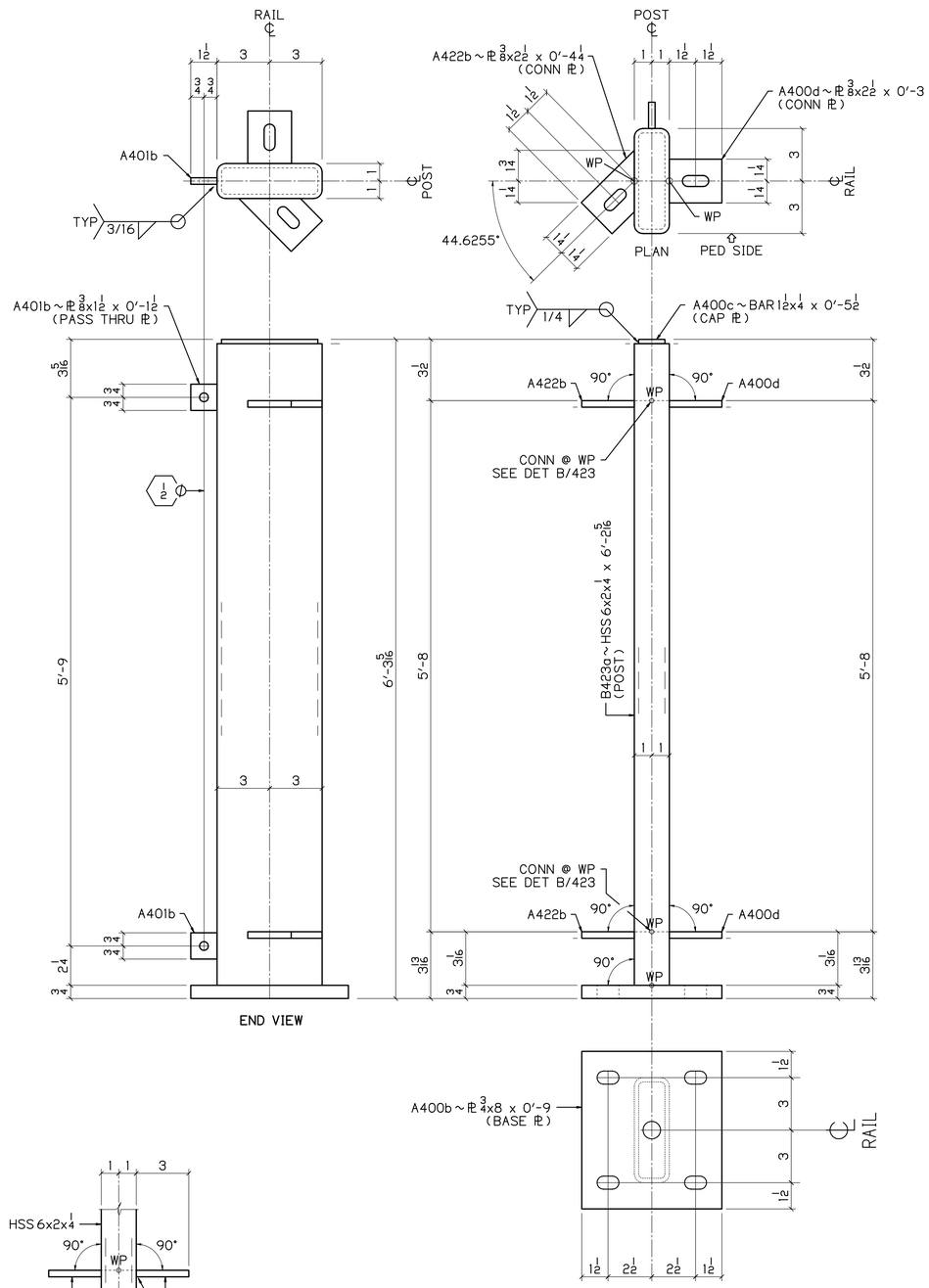

1 ~ B423

POSTS
PASS THRU
PEDESTRIAN SIDE SHOWN

BILL OF MATERIAL

NO	MK	NO	SUBMK	MATERIAL	FT	IN	REMARKS	SORT
1	A423			END POST				MM
		1	A423a	HSS 6x2x1/4	6	2 5/16	SC2E	TS
		2	A422b	PL 3/8x2 1/2	0	4 1/4	CONN PL	PL
		1	A400b	PL 3/4x8	0	9	BASE PL	PL
		1	A400c	BAR 1 1/2x1/4	0	5 1/2	CAP PL	B
		2	A500d	PL 3/8x2 1/2	0	3	CONN PL	PL
		2	A401b	PL 1/2x1 1/2	0	1 1/2	PASS THRU PL	PL
1	B423			END POST				MM
		1	B423a	HSS 6x2x1/4	6	2 5/16	SC2E	TS
		2	A422b	PL 3/8x2 1/2	0	4 1/4	CONN PL	PL
		1	A400b	PL 3/4x8	0	9	BASE PL	PL
		1	A400c	BAR 1 1/2x1/4	0	5 1/2	CAP PL	B
		2	A500d	PL 3/8x2 1/2	0	3	CONN PL	PL
		2	A401b	PL 1/2x1 1/2	0	1 1/2	PASS THRU PL	PL

BU-19 BLUE-GREEN LINES
100% COMPLETE 08-16-21

P.H. DREW INC.
2450 N. RACEWAY RD. - P.O. BOX 34295
INDIANAPOLIS, INDIANA 46234
PHONE : (317) 297-5152
FAX : (317) 297-5313

APPROVAL
APPROVED 08-03-21

CUY-IR490 / SR010-2.09 / 19.28

DECORATIVE FENCE

POSTS

REVISION

REV	DATE	DESCRIPTION	BY

APPROVAL RECORD

DATE	ISSUED	APP DATE	APPROVAL STATUS
08-16-21	FABRICATION		

STATE	OHIO
COUNTY	CUYAHOGA (CITY OF CLEVELAND)
PROJECT	3000 (17)
CONTRACT	PID 96833
SECTION	
STRUCTURE	
STATE JOB	
CUSTOMER	LAKE ERIE CONSTRUCTION COMPANY
CONTRACTOR	
ARCH/ENG	
REFERENCE	
ITEM	
FINISH	SEE NOTES-SHT E400

DRAWN BY	CHECKED BY	MRH NO	JOB MGR	DWG STATUS	JOB NO.	TOTAL SHEETS	SHEET
MRH 07-11-21	SRF 08-12-21	1914	JL	FABRICATION 08-16-21	19-1108		423

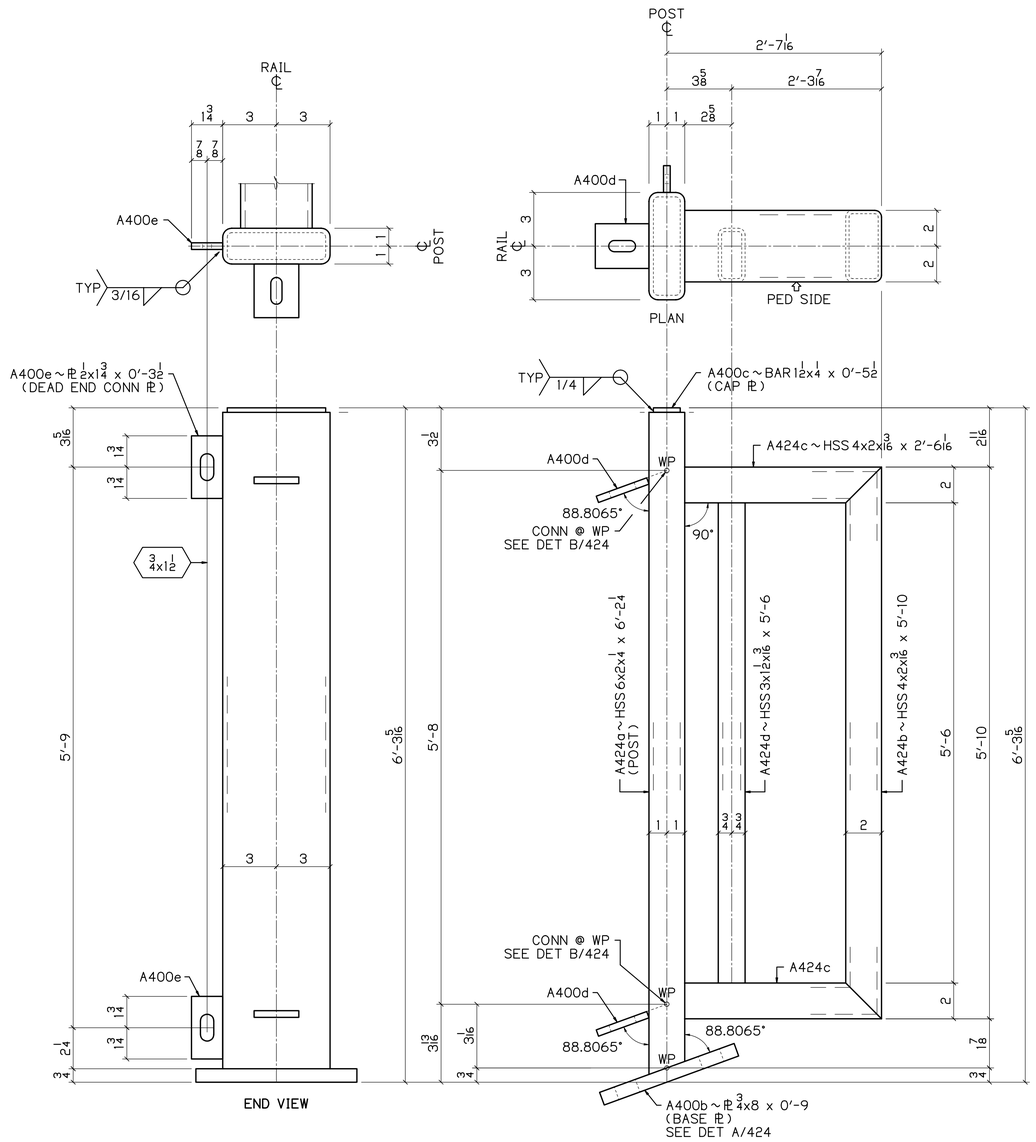

1 ~ A424

POSTS
DEAD END CONNECTION
PEDESTRIAN SIDE SHOWN

1.1935" 1/4 / 12

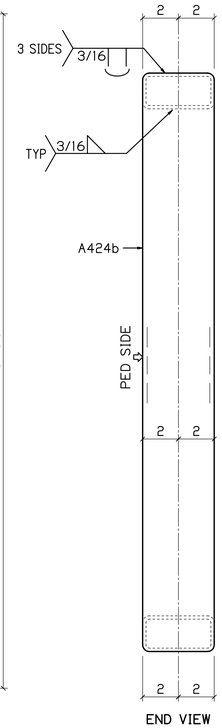

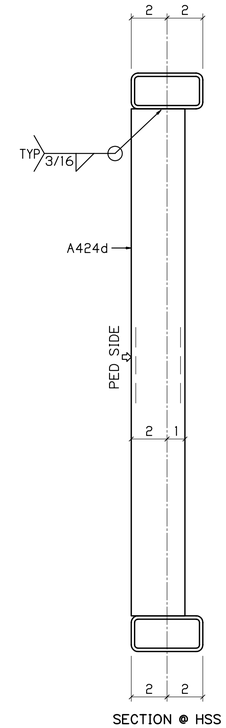

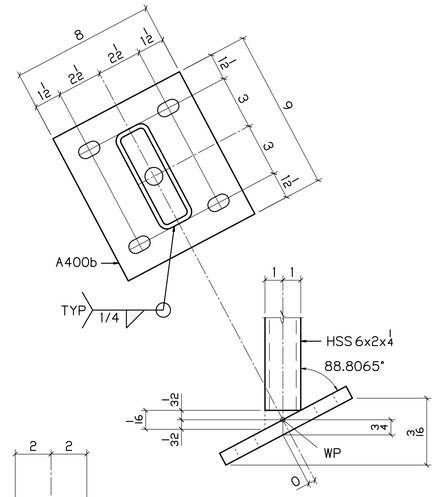

DETAIL A / 424

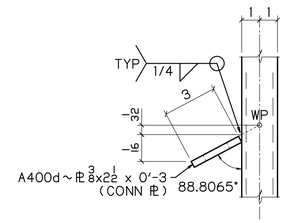

DETAIL B / 424

UP

BILL OF MATERIAL

NO	MK	NO	SUBMK	MATERIAL	FT	IN	REMARKS	SORT
1	A424			END POST				MM
		1	A424a	HSS 6x2x4 1/4	6	2 1/4	SC2E	TS
		1	A424b	HSS 4x2x3/16	5	10	BC2E	TS
		2	A424c	HSS 4x2x3/16	2	6 1/16	SC1E, BC1E	TS
		1	A424d	HSS 3x1 1/2x3/16	5	6	SC2E	TS
		1	A400b	PL 3/4x8	0	9	BASE PL	PL
		1	A400c	BAR 1 1/2x4 1/4	0	5 1/2	CAP PL	B
		2	A400d	PL 3/8x2 1/2	0	3	CONN PL	PL
		2	A400e	PL 1/2x1 3/4	0	3 1/2	DEAD END CONN PL	PL

BU-19 BLUE-GREEN LINES
100% COMPLETE 08-16-21

P.H. DREW INC.
2450 N. RACEWAY RD. - P.O. BOX 34295
INDIANAPOLIS, INDIANA 46234
PHONE : (317) 297-5152
FAX : (317) 297-5313

APPROVAL: APPROVED 08-03-21

CUY-IR490 / SR010-2.09 / 19.28

DECORATIVE FENCE

POSTS

REVISION

REV	DATE	DESCRIPTION	BY

STATE	OHIO
COUNTY	CUYAHOGA (CITY OF CLEVELAND)
PROJECT	3000 (17)
CONTRACT	PID 96833
SECTION	
STRUCTURE	
STATE JOB	

APPROVAL RECORD

DATE	ISSUED	APP DATE	APPROVAL STATUS
08-16-21	FABRICATION		

CUSTOMER	LAKE ERIE CONSTRUCTION COMPANY
CONTRACTOR	
ARCH/ENG	
REFERENCE	
ITEM	
FINISH	SEE NOTES - SHT E400

DRAWN BY	CHECKED BY	MRH NO	JOB MGR	DWG STATUS	JOB NO.	TOTAL SHEETS	SHEET
MRH 07-11-21	SRF 08-12-21	1914	JL	FABRICATION 08-16-21	19-1108		424

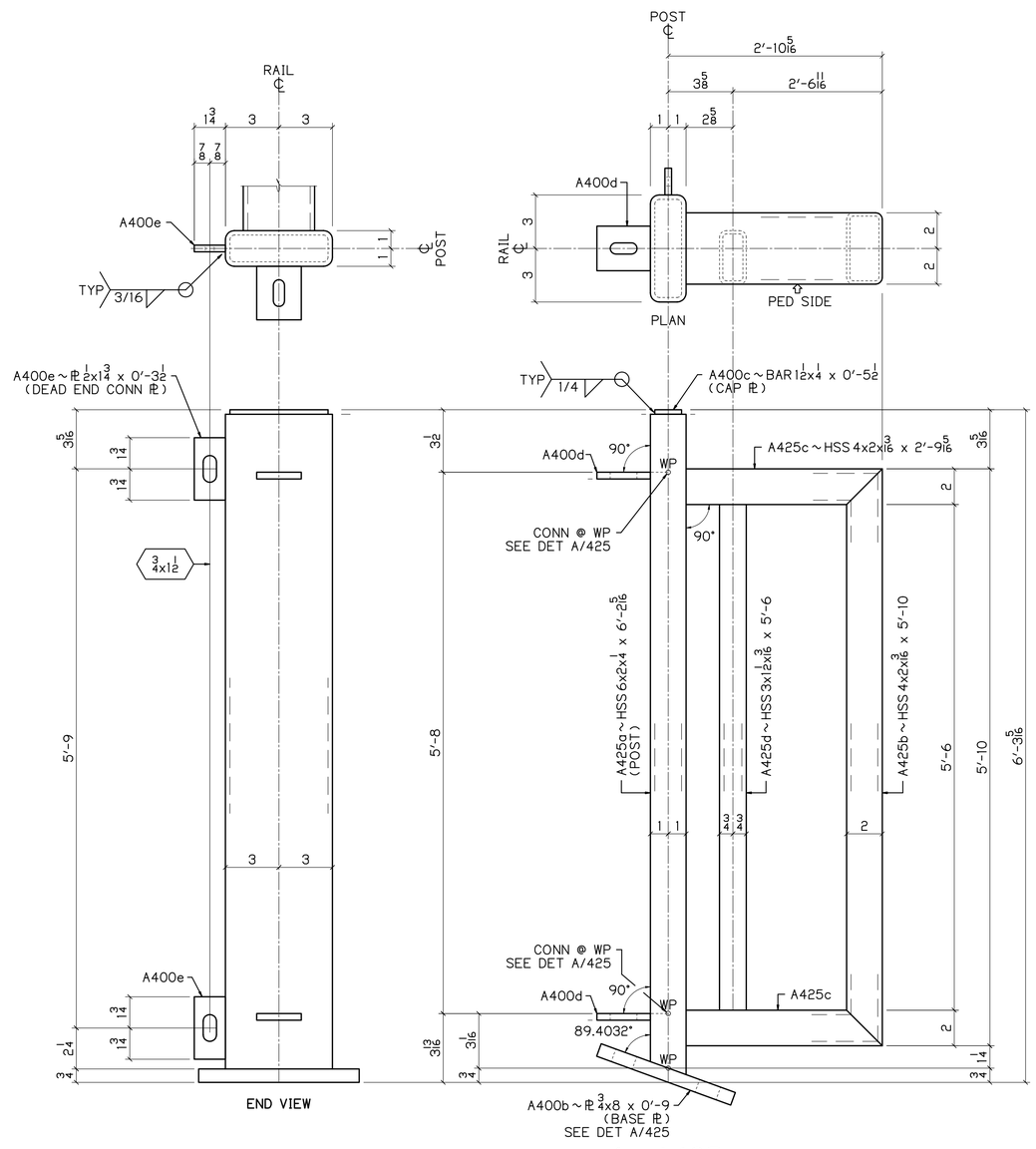

1 ~ A425

POSTS
DEAD END CONNECTION
PEDESTRIAN SIDE SHOWN

1/8 | 0.5968" / 12

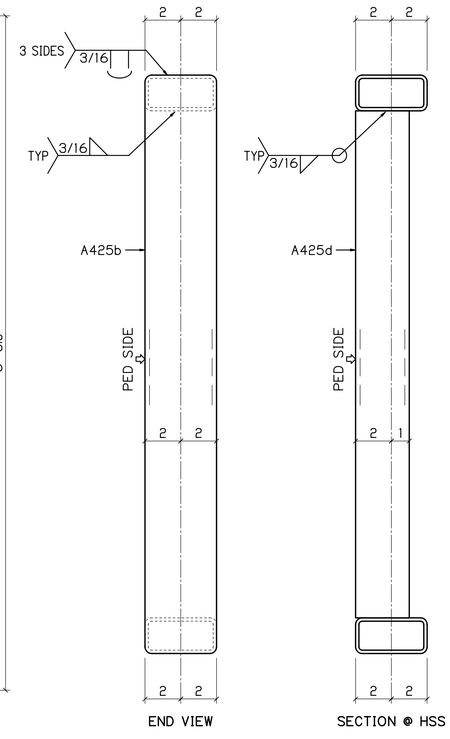

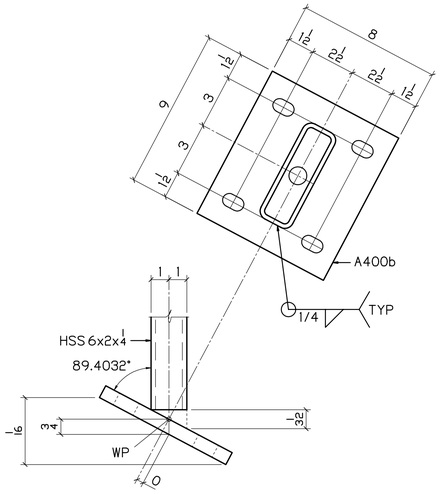

DETAIL A 425

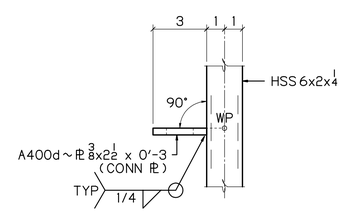

DETAIL B 425

BILL OF MATERIAL

NO	MK	NO	SUBMK	MATERIAL	FT	IN	REMARKS	SORT
1	A425			END POST				MM
		1	A425a	HSS 6x2x1/4	6	2 5/16	SC2E	TS
		1	A425b	HSS 4x2x3/16	5	10	BC2E	TS
		2	A425c	HSS 4x2x3/16	2	9 5/16	SC1E, BC1E	TS
		1	A425d	HSS 3x1 1/2x3/16	5	6	SC2E	TS
		1	A400b	PL 3/4x8	0	9	BASE PL	PL
		1	A400c	BAR 1/2x4 1/4	0	5 1/2	CAP PL	B
		2	A400d	PL 3/8x2 1/2	0	3	CONN PL	PL
		2	A400e	PL 1/2x1 3/4	0	3 1/2	DEAD END CONN PL	PL

BU-19 BLUE-GREEN LINES
100% COMPLETE 08-16-21

P.H. DREW INC.
2450 N. RACEWAY RD. - P.O. BOX 34295
INDIANAPOLIS, INDIANA 46234
PHONE : (317) 297-5152
FAX : (317) 297-5313

APPROVAL: APPROVED 08-03-21

CUY-IR490 / SR010-2.09 / 19.28

DECORATIVE FENCE

POSTS

REVISION

REV	DATE	DESCRIPTION	BY

APPROVAL RECORD

DATE	ISSUED	APP DATE	APPROVAL STATUS
08-16-21	FABRICATION		

STATE	OHIO
COUNTY	CUYAHOGA (CITY OF CLEVELAND)
PROJECT	3000 (17)
CONTRACT	PID 96833
SECTION	
STRUCTURE	
STATE JOB	
CUSTOMER	LAKE ERIE CONSTRUCTION COMPANY
CONTRACTOR	
ARCH/ENG	
REFERENCE	
ITEM	
FINISH	SEE NOTES - SHT E400

DRAWN BY	CHECKED BY	MRH NO	JOB MGR	DWG STATUS	JOB NO.	TOTAL SHEETS	SHEET
MRH 07-11-21	SRF 08-12-21	1914	JL	FABRICATION 08-16-21	19-1108		425

DN

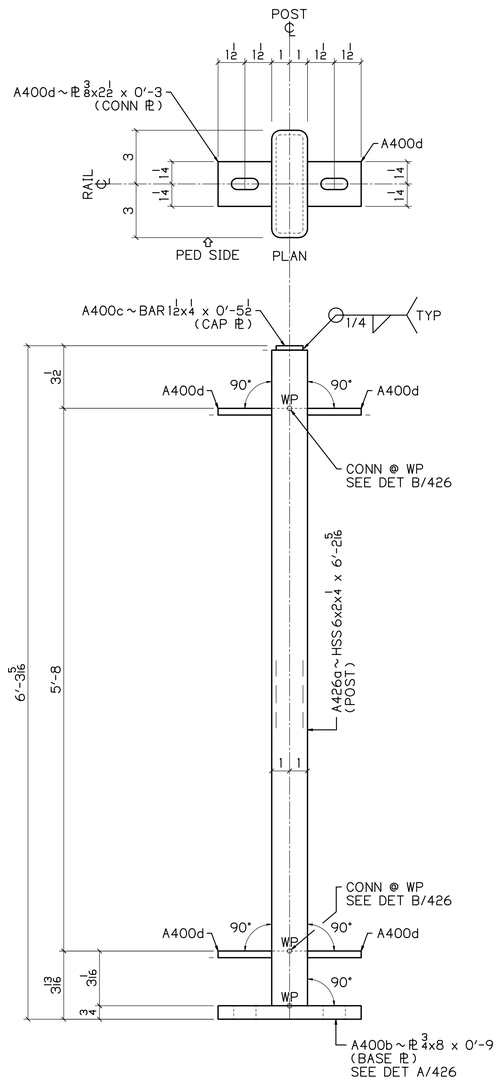

6 ~ A426
POSTS
REVERSIBLE

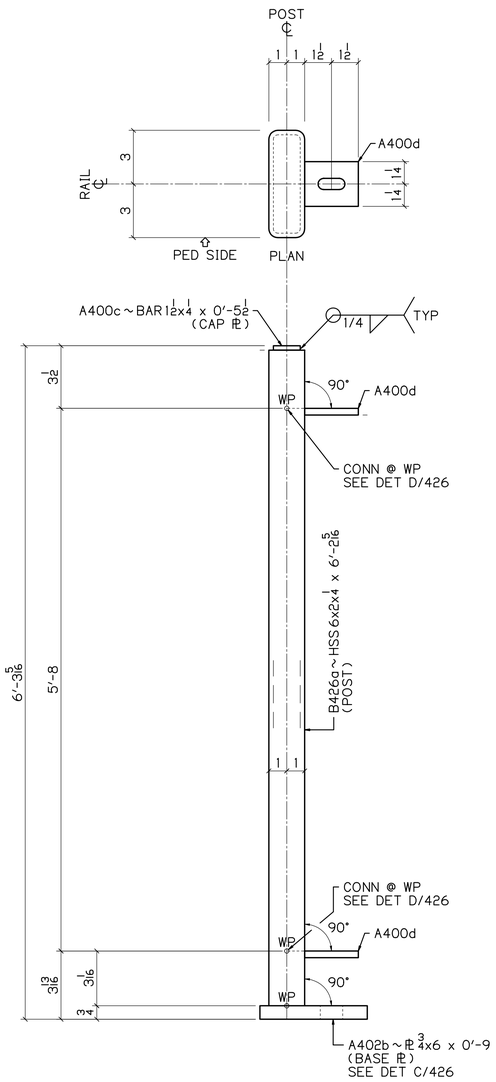

1 ~ B426
POSTS
REVERSIBLE

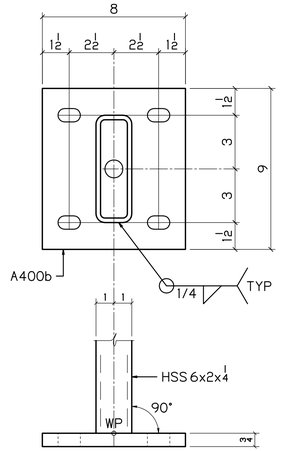

DETAIL A / 426

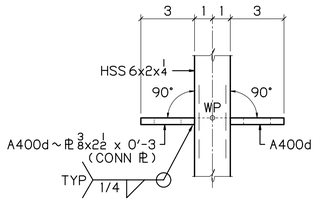

DETAIL B / 426

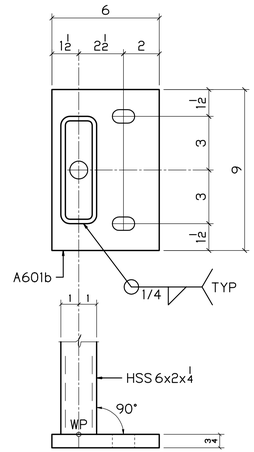

DETAIL C / 426

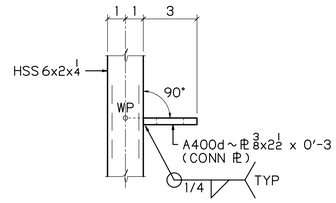

DETAIL D / 426

BILL OF MATERIAL

NO	MK	NO	SUBMK	MATERIAL	FT	IN	REMARKS	SORT
6	A426			POSTS				MM
		6	A426a	HSS 6x2x1/4	6	2 5/16	SC2E	TS
		6	A400b	PL 3/4x8	0	9	BASE PL	PL
		6	A400c	BAR 1 1/2x1/4	0	5 1/2	CAP PL	B
		24	A400d	PL 3/8x2 1/2	0	3	CONN PL	PL
1	B426			POSTS				MM
		1	B426a	HSS 6x2x1/4	6	2 5/16	SC2E	TS
		1	A402b	PL 3/4x6	0	9	BASE PL	PL
		1	A400c	BAR 1 1/2x1/4	0	5 1/2	CAP PL	B
		2	A400d	PL 3/8x2 1/2	0	3	CONN PL	PL

BU-19 BLUE-GREEN LINES
100% COMPLETE 08-16-21

P.H. DREW INC.
2450 N. RACEWAY RD. - P.O. BOX 34295
INDIANAPOLIS, INDIANA 46234
PHONE : (317) 297-5152
FAX : (317) 297-5313

APPROVAL: APPROVED 08-03-21

CUY-IR490 / SR010-2.09 / 19.28
DECORATIVE FENCE
POSTS

REVISION REV	DATE	DESCRIPTION	BY

APPROVAL RECORD DATE	ISSUED	APP DATE	APPROVAL STATUS
08-16-21	FABRICATION		

STATE	OHIO
COUNTY	CUYAHOGA (CITY OF CLEVELAND)
PROJECT	3000 (17)
CONTRACT	PID 96833
SECTION	
STRUCTURE	
STATE JOB	
CUSTOMER	LAKE ERIE CONSTRUCTION COMPANY
CONTRACTOR	
ARCH/ENG	
REFERENCE	
ITEM	
FINISH	SEE NOTES-SHT E400

DRAWN BY	CHECKED BY	MRH NO	JOB MGR	DWG STATUS	JOB NO.	TOTAL SHEETS	SHEET
MRH 07-11-21	SRF 08-12-21	1914	JL	FABRICATION 08-16-21	19-1108		426

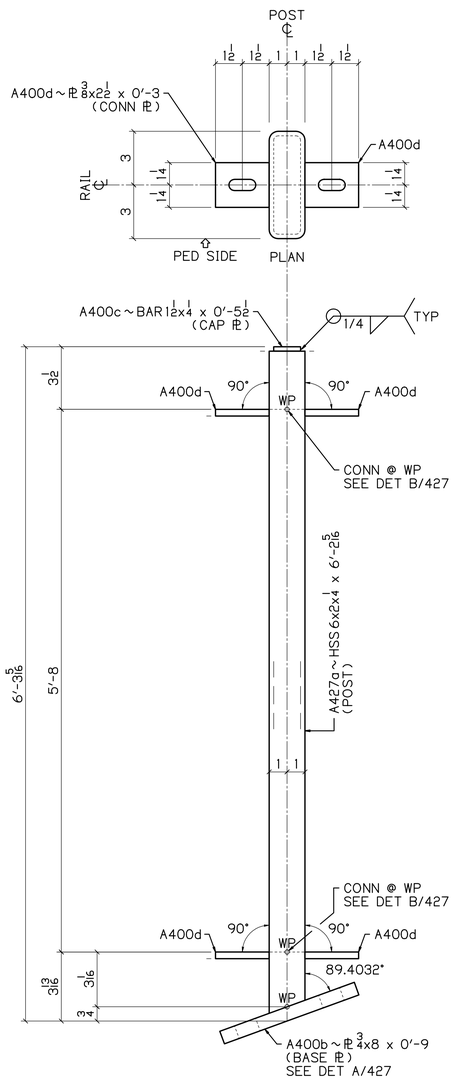

13 ~ A427

POSTS
REVERSIBLE

0.5968* | 1/8 / 12

1/8 | 0.5968* / 12

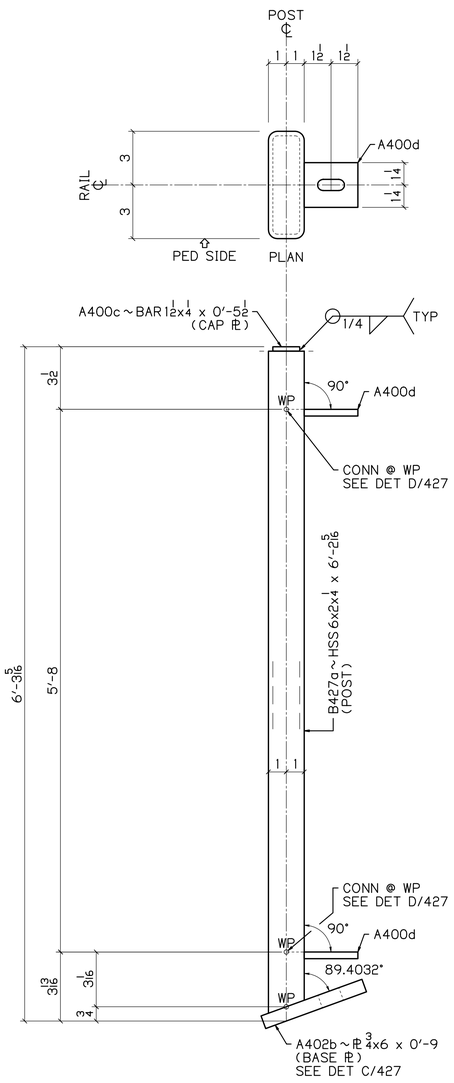

2 ~ B427

POSTS
REVERSIBLE

0.5968* | 1/8 / 12

1/8 | 0.5968* / 12

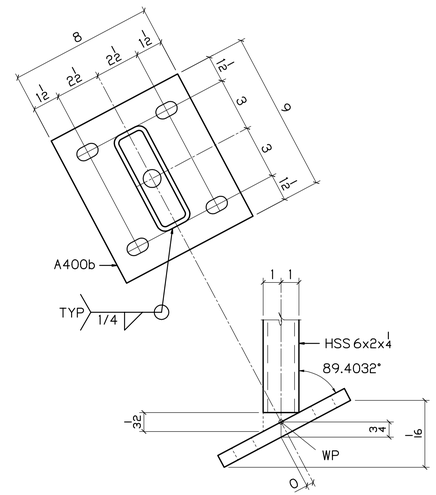

DETAIL A / 427

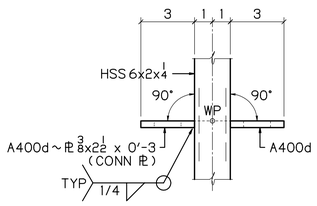

DETAIL B / 427

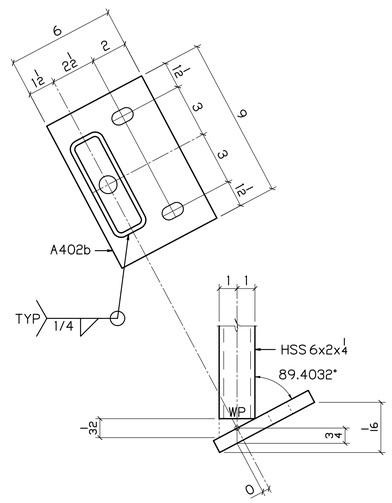

DETAIL C / 427

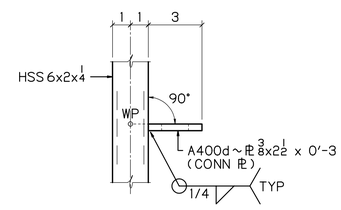

DETAIL D / 427

BILL OF MATERIAL

NO	MK	NO	SUBMK	MATERIAL	FT	IN	REMARKS	SORT
13	A427			POSTS				MM
		13	A427a	HSS 6x2x1/4	6	2 5/16	SC2E	TS
		13	A400b	PL 3/4x8	0	9	BASE PL	PL
		13	A400c	BAR 1 1/2x1/4	0	5 1/2	CAP PL	B
		52	A400d	PL 3/8x2 1/2	0	3	CONN PL	PL
2	B427			POSTS				MM
		2	B427a	HSS 6x2x1/4	6	2 5/16	SC2E	TS
		2	A402b	PL 3/4x6	0	9	BASE PL	PL
		2	A400c	BAR 1 1/2x1/4	0	5 1/2	CAP PL	B
		4	A400d	PL 3/8x2 1/2	0	3	CONN PL	PL

BU-19 BLUE-GREEN LINES
100% COMPLETE 08-16-21

P.H. DREW INC.
2450 N. RACEWAY RD. - P.O. BOX 34295
INDIANAPOLIS, INDIANA 46234
PHONE : (317) 297-5152
FAX : (317) 297-5313

APPROVAL: APPROVED 08-03-21

CUY-IR490 / SR010-2.09 / 19.28

DECORATIVE FENCE

POSTS

REVISION REV	DATE	DESCRIPTION	BY

APPROVAL RECORD DATE	ISSUED	APP DATE	APPROVAL STATUS
08-16-21	FABRICATION		

STATE	OHIO
COUNTY	CUYAHOGA (CITY OF CLEVELAND)
PROJECT	3000 (17)
CONTRACT	PID 96833
SECTION	
STRUCTURE	
STATE JOB	
CUSTOMER	LAKE ERIE CONSTRUCTION COMPANY
CONTRACTOR	
ARCH/ENG	
REFERENCE	
ITEM	
FINISH	SEE NOTES-SHT E400

DRAWN BY	CHECKED BY	MRH NO	JOB MGR	DWG STATUS	JOB NO.	TOTAL SHEETS	SHEET
MRH 07-11-21	SRF 08-12-21	1914	JL	FABRICATION 08-16-21	19-1108		427

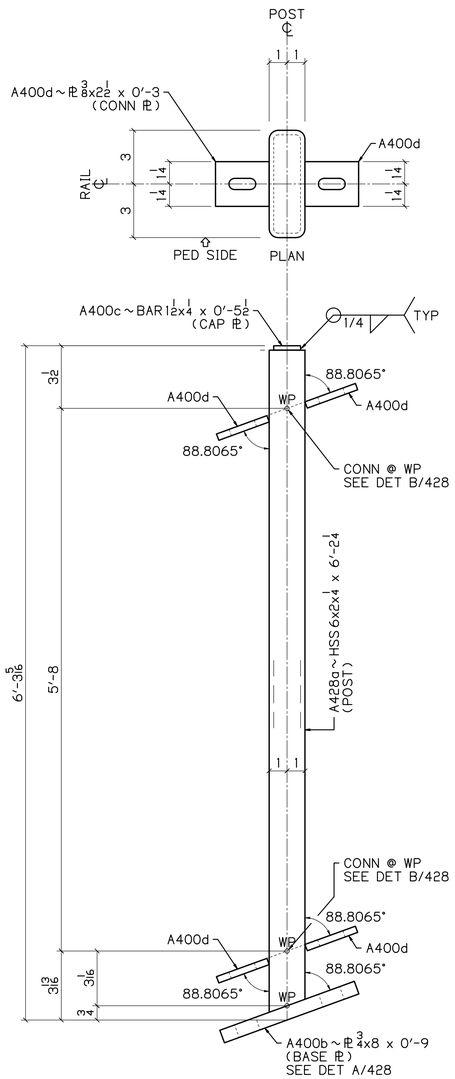

52 ~ A428

POSTS
REVERSIBLE

0.8952° 3/16 | 3/16 0.8952° / 12

1.1935° 1/4 | 1/4 1.1935° / 12

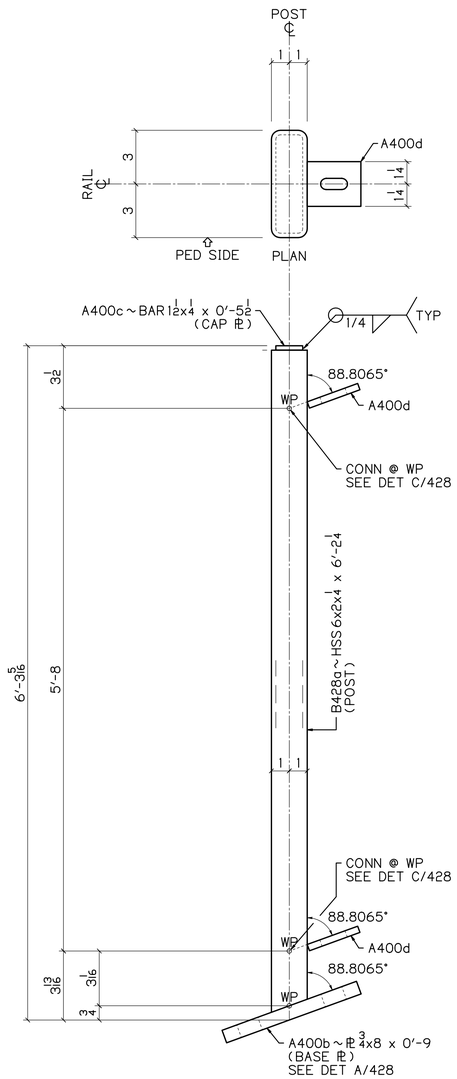

1 ~ B428

POSTS
REVERSIBLE

1.1935° 1/4 / 12

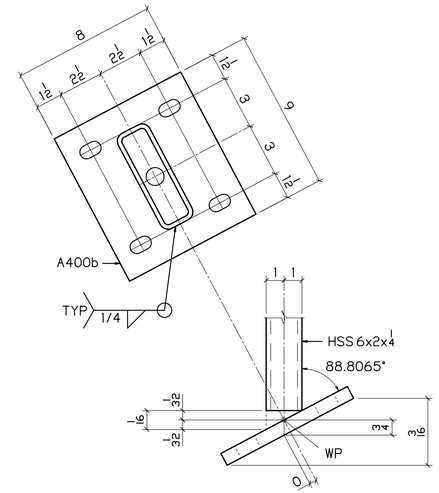

DETAIL A / 428

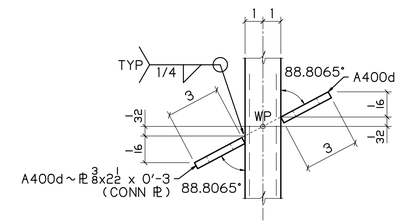

DETAIL B / 428

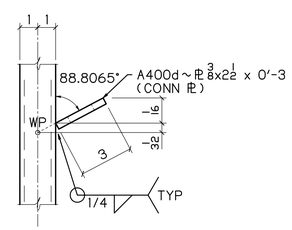

DETAIL C / 428

BILL OF MATERIAL

NO	MK	NO	SUBMK	MATERIAL	FT	IN	REMARKS	SORT
52	A428			POSTS				MM
		52	A428a	HSS 6x2x1/4	6	2 1/4	SC2E	TS
		52	A400b	PL 3/4x8	0	9	BASE PL	PL
		52	A400c	BAR 1 1/2x1/4	0	5 1/2	CAP PL	B
		208	A400d	PL 3/8x2 1/2	0	3	CONN PL	PL
1	B428			POSTS				MM
		1	B428a	HSS 6x2x1/4	6	2 1/4	SC2E	TS
		1	A400b	PL 3/4x8	0	9	BASE PL	PL
		1	A400c	BAR 1 1/2x1/4	0	5 1/2	CAP PL	B
		2	A400d	PL 3/8x2 1/2	0	3	CONN PL	PL

BU-19 BLUE-GREEN LINES
100% COMPLETE 08-16-21

P.H. DREW INC.
2450 N. RACEWAY RD. - P.O. BOX 34295
INDIANAPOLIS, INDIANA 46234
PHONE : (317) 297-5152
FAX : (317) 297-5313

APPROVAL: APPROVED 08-03-21

CUY-IR490 / SR010-2.09 / 19.28

DECORATIVE FENCE

POSTS

REVISION	REV	DATE	DESCRIPTION	BY

STATE	OHIO
COUNTY	CUYAHOGA (CITY OF CLEVELAND)
PROJECT	3000 (17)
CONTRACT	PID 96833
SECTION	
STRUCTURE	
STATE JOB	

APPROVAL RECORD	DATE	ISSUED	APP DATE	APPROVAL STATUS
	08-16-21	FABRICATION		

CUSTOMER	LAKE ERIE CONSTRUCTION COMPANY
CONTRACTOR	
ARCH/ENG	
REFERENCE	
ITEM	
FINISH	SEE NOTES-SHT E400

DRAWN BY	CHECKED BY	MRH NO	JOB MGR	DWG STATUS	JOB NO.	TOTAL SHEETS	SHEET
MRH 07-11-21	SRF 08-12-21	1914	JL	FABRICATION 08-16-21	19-1108		428

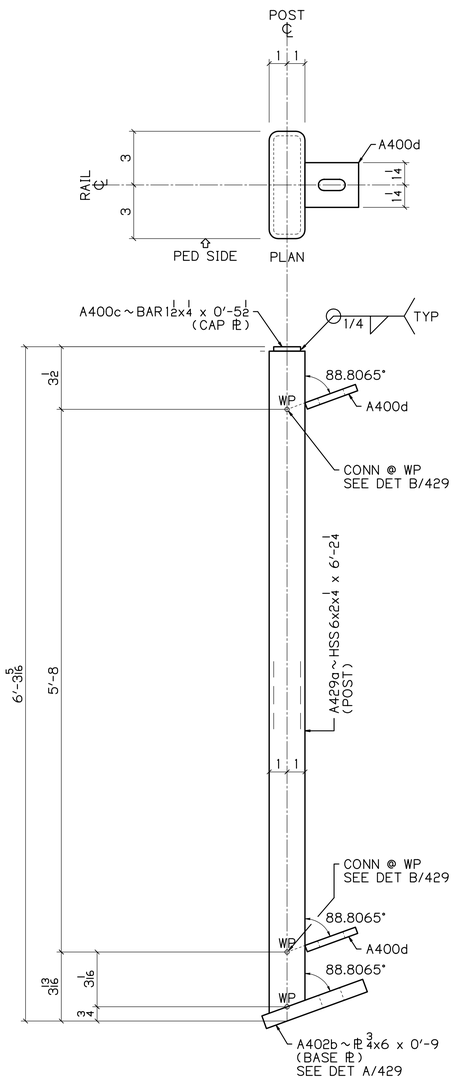

7 ~ A429

POSTS
REVERSIBLE

0.8952° / 12 | 3/16 | 3/16 | 0.8952° / 12

1.1935° / 12 | 1/4 | 1/4 | 1.1935° / 12

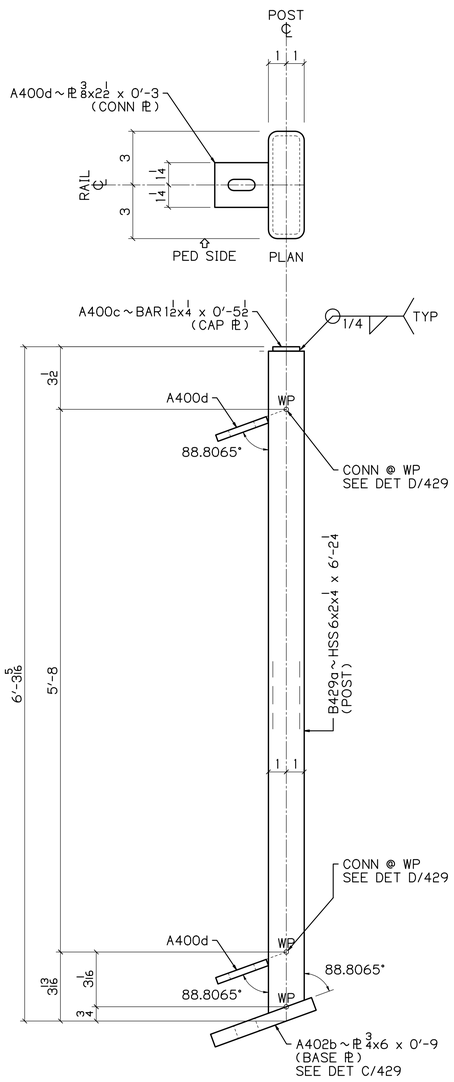

8 ~ B429

POSTS
REVERSIBLE

0.8952° / 12 | 3/16 | 3/16 | 0.8952° / 12

1.1935° / 12 | 1/4 | 1/4 | 1.1935° / 12

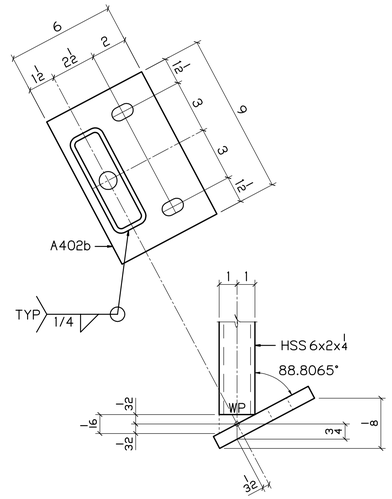

DETAIL A / 429

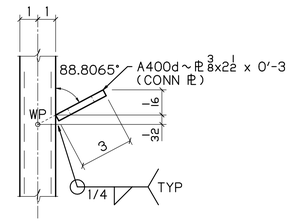

DETAIL B / 429

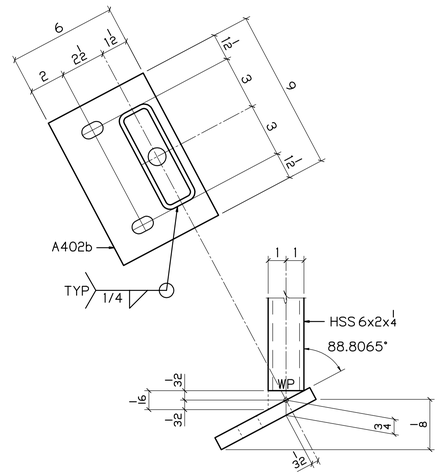

DETAIL C / 429

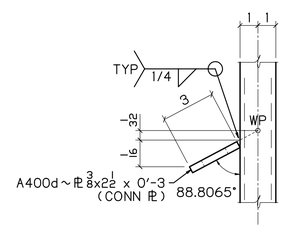

DETAIL D / 429

BILL OF MATERIAL

NO	MK	NO	SUBMK	MATERIAL	FT	IN	REMARKS	SORT
7	A429			POSTS				MM
		7	A429a	HSS 6x2x1/4	6	2 1/4	SC2E	TS
		7	A402b	ℙ 3/4x6	0	9	BASE ℙ	PL
		7	A400c	BAR 1 1/2x1/4	0	5 1/2	CAP ℙ	B
		14	A400d	ℙ 3/8x2 1/2	0	3	CONN ℙ	PL
8	B429			POSTS				MM
		8	B429a	HSS 6x2x1/4	6	2 1/4	SC2E	TS
		8	A402b	ℙ 3/4x6	0	9	BASE ℙ	PL
		8	A400c	BAR 1 1/2x1/4	0	5 1/2	CAP ℙ	B
		16	A400d	ℙ 3/8x2 1/2	0	3	CONN ℙ	PL

BU-19 BLUE-GREEN LINES

100% COMPLETE 08-16-21

P.H. DREW INC.
2450 N. RACEWAY RD. - P.O. BOX 34295
INDIANAPOLIS, INDIANA 46234
PHONE : (317) 297-5152
FAX : (317) 297-5313

APPROVAL: APPROVED 08-03-21

CUY-IR490 / SR010-2.09 / 19.28

DECORATIVE FENCE

POSTS

REVISION

REV	DATE	DESCRIPTION	BY

APPROVAL RECORD

DATE	ISSUED	APP DATE	APPROVAL STATUS
08-16-21	FABRICATION		

STATE	OHIO
COUNTY	CUYAHOGA (CITY OF CLEVELAND)
PROJECT	3000 (17)
CONTRACT	PID 96833
SECTION	
STRUCTURE	
STATE JOB	
CUSTOMER	LAKE ERIE CONSTRUCTION COMPANY
CONTRACTOR	
ARCH/ENG	
REFERENCE	
ITEM	
FINISH	SEE NOTES - SHT E400

DRAWN BY	CHECKED BY	MRH NO	JOB MGR	DWG STATUS	JOB NO.	TOTAL SHEETS	SHEET
MRH 07-11-21	SRF 08-12-21	1914	JL	FABRICATION 08-16-21	19-1108		429

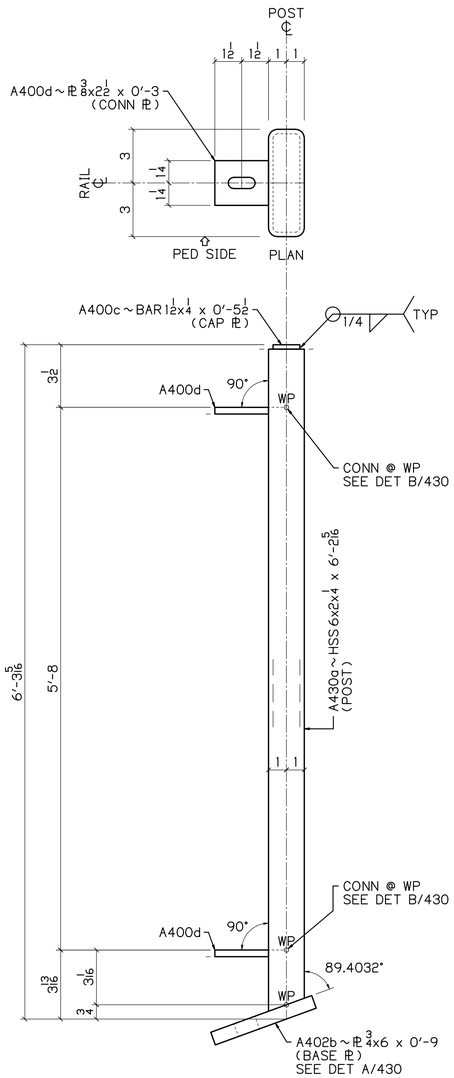

1 ~ A430
POSTS

0.5968" | 1/8
12

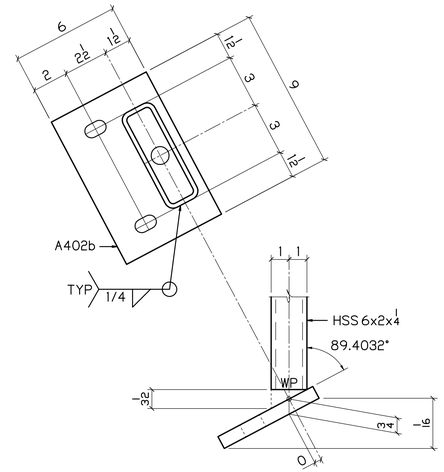

DETAIL A / 430

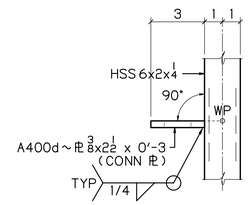

DETAIL B / 430

BILL OF MATERIAL

NO	MK	NO	SUBMK	MATERIAL	FT	IN	REMARKS	SORT
1	A430			POSTS				MM
		1	A430a	HSS 6x2x4 1/4	6	2 5/16	SC2E	TS
		1	A400b	PL 3/4x8	0	9	BASE PL	PL
		1	A400c	BAR 1 1/2x4 1/4	0	5 1/2	CAP PL	B
		2	A400d	PL 3/8x2 1/2	0	3	CONN PL	PL

BU-19 BLUE-GREEN LINES
100% COMPLETE 08-16-21

P.H. DREW INC.
2450 N. RACEWAY RD. - P.O. BOX 34295
INDIANAPOLIS, INDIANA 46234
PHONE : (317) 297-5152
FAX : (317) 297-5313

APPROVAL: APPROVED 08-03-21

CUY-IR490 / SR010-2.09 / 19.28
DECORATIVE FENCE
POSTS

REVISION

REV	DATE	DESCRIPTION	BY

STATE	OHIO
COUNTY	CUYAHOGA (CITY OF CLEVELAND)
PROJECT	3000 (17)
CONTRACT	PID 96833
SECTION	
STRUCTURE	
STATE JOB	

APPROVAL RECORD

DATE	ISSUED	APP DATE	APPROVAL STATUS
08-16-21	FABRICATION		

CUSTOMER	LAKE ERIE CONSTRUCTION COMPANY
CONTRACTOR	
ARCH/ENG	
REFERENCE	
ITEM	
FINISH	SEE NOTES-SHT E400

DRAWN BY	CHECKED BY	MRH NO	JOB MGR	DWG STATUS	JOB NO.	TOTAL SHEETS	SHEET
MRH 07-11-21	SRF 08-12-21	1914	JL	FABRICATION 08-16-21	19-1108		430

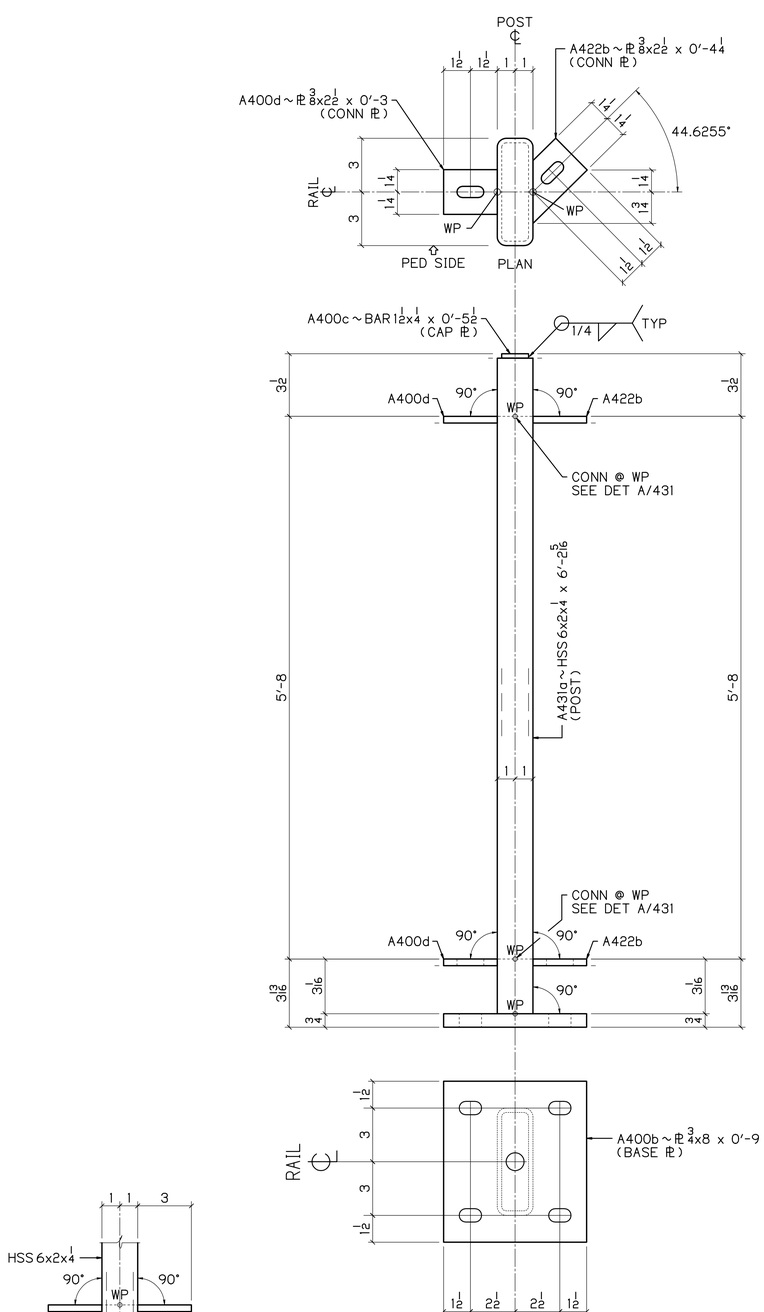

2 ~ A431
POSTS

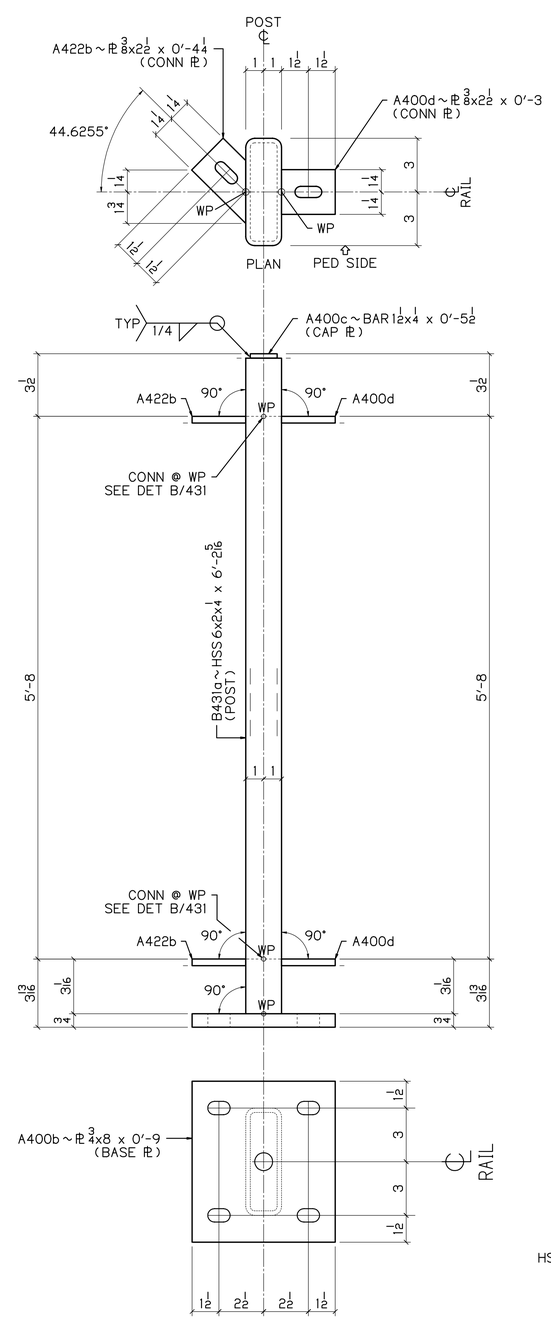

2 ~ B431
POSTS

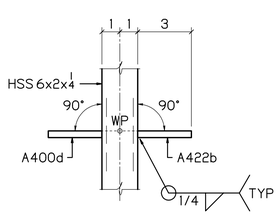

DETAIL A 431

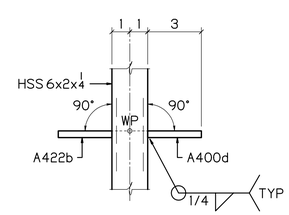

DETAIL B 431

BILL OF MATERIAL

NO	MK	NO	SUBMK	MATERIAL	FT	IN	REMARKS	SORT
2	A431			END POST				MM
		2	A431a	HSS 6x2x4 1/4	6	2 5/16	SC2E	TS
		4	A422b	PL 3/8x2 1/2	0	4 1/4	CONN PL	PL
		2	A400b	PL 3/4x8	0	9	BASE PL	PL
		2	A400c	BAR 1 1/2x4 1/4	0	5 1/2	CAP PL	B
		4	A400d	PL 3/8x2 1/2	0	3	CONN PL	PL
2	B431			END POST				MM
		2	B431a	HSS 6x2x4 1/4	6	2 5/16	SC2E	TS
		4	A422b	PL 3/8x2 1/2	0	4 1/4	CONN PL	PL
		2	A400b	PL 3/4x8	0	9	BASE PL	PL
		2	A400c	BAR 1 1/2x4 1/4	0	5 1/2	CAP PL	B
		4	A400d	PL 3/8x2 1/2	0	3	CONN PL	PL

BU-19 BLUE-GREEN LINES
100% COMPLETE 08-16-21

P.H. DREW INC.
2450 N. RACEWAY RD. - P.O. BOX 34295
INDIANAPOLIS, INDIANA 46234
PHONE : (317) 297-5152
FAX : (317) 297-5313

APPROVAL
APPROVED 08-03-21

CUY-IR490 / SR010-2.09 / 19.28

DECORATIVE FENCE

POSTS

REVISION

REV	DATE	DESCRIPTION	BY

APPROVAL RECORD

DATE	ISSUED	APP DATE	APPROVAL STATUS
08-16-21	FABRICATION		

STATE	OHIO
COUNTY	CUYAHOGA (CITY OF CLEVELAND)
PROJECT	3000 (17)
CONTRACT	PID 96833
SECTION	
STRUCTURE	
STATE JOB	
CUSTOMER	LAKE ERIE CONSTRUCTION COMPANY
CONTRACTOR	
ARCH/ENG	
REFERENCE	
ITEM	
FINISH	SEE NOTES-SHT E400

DRAWN BY	CHECKED BY	MRH NO	JOB MGR	DWG STATUS	JOB NO.	TOTAL SHEETS	SHEET
MRH 07-11-21	SRF 08-12-21	1914	JL	FABRICATION 08-16-21	19-1108		431

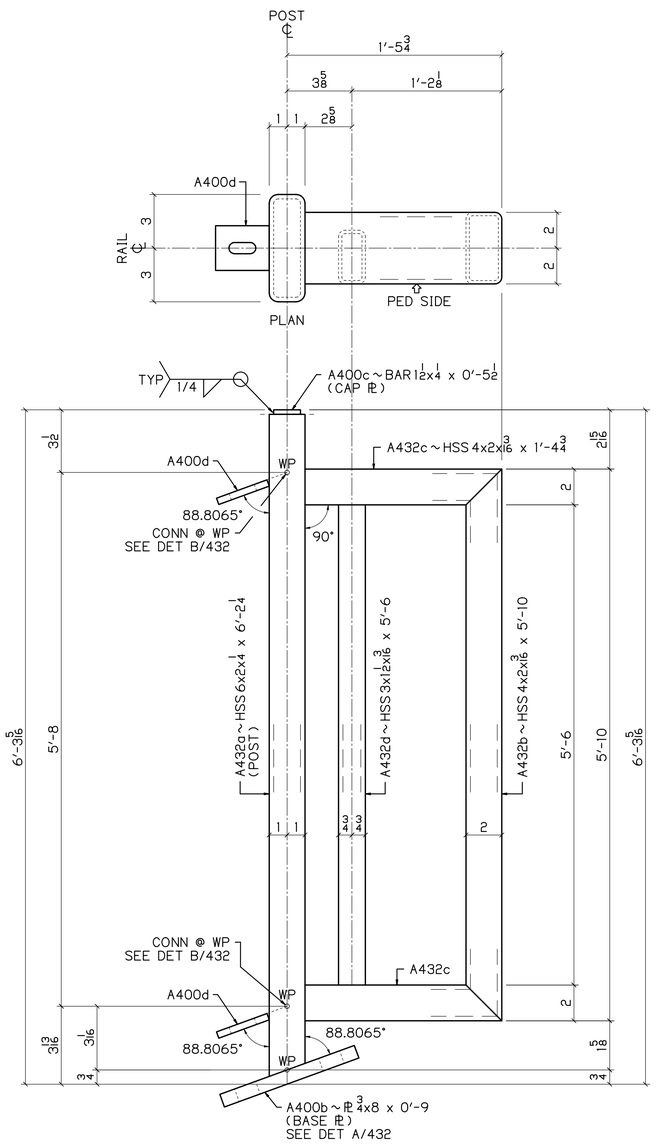

1 ~ A432
POSTS
PEDESTRIAN SIDE SHOWN

1.1935* | 1/4 / 12

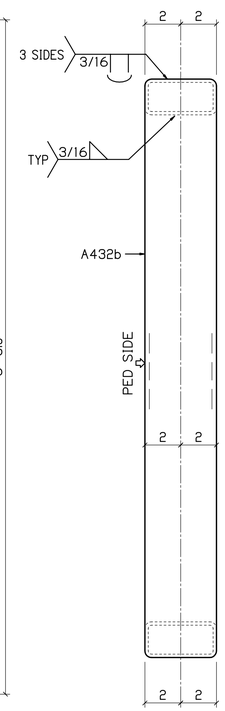

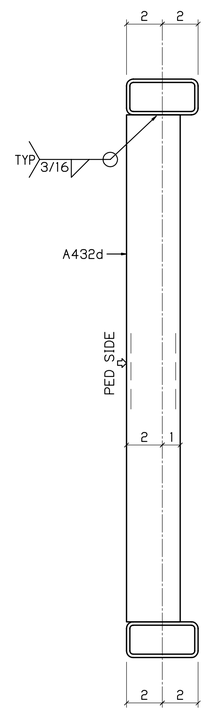

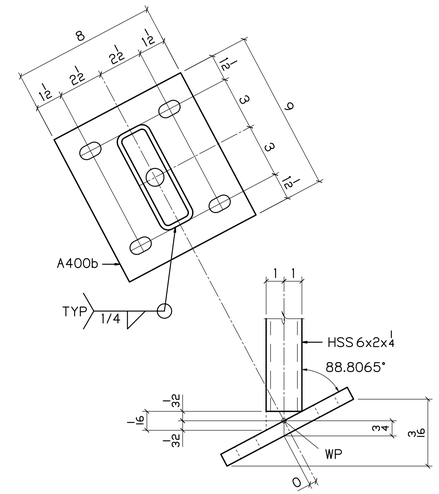

DETAIL A / 432

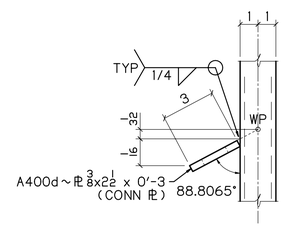

DETAIL B / 432

UP

BILL OF MATERIAL

NO	MK	NO	SUBMK	MATERIAL	FT	IN	REMARKS	SORT
1	A432			END POST				MM
		1	A432a	HSS 6x2x1/4	6	2 1/4	SC2E	TS
		1	A432b	HSS 4x2x3/16	5	10	BC2E	TS
		2	A432c	HSS 4x2x3/16	1	4 3/4	SC1E, BC1E	TS
		1	A432d	HSS 3x1 1/2x3/16	5	6	SC2E	TS
		1	A400b	PL 3/4x8	0	9	BASE PL	PL
		1	A400c	BAR 1 1/2x4 1/4	0	5 1/2	CAP PL	B
		2	A400d	PL 3/8x2 1/2	0	3	CONN PL	PL

BU-19 BLUE-GREEN LINES
100% COMPLETE 08-16-21

P.H. DREW INC.
2450 N. RACEWAY RD. - P.O. BOX 34295
INDIANAPOLIS, INDIANA 46234
PHONE : (317) 297-5152
FAX : (317) 297-5313

APPROVAL: APPROVED 08-03-21

CUY-IR490 / SR010-2.09 / 19.28
DECORATIVE FENCE
POSTS

REVISION

REV	DATE	DESCRIPTION	BY

STATE	OHIO
COUNTY	CUYAHOGA (CITY OF CLEVELAND)
PROJECT	3000 (17)
CONTRACT	PID 96833
SECTION	
STRUCTURE	
STATE JOB	

APPROVAL RECORD

DATE	ISSUED	APP DATE	APPROVAL STATUS
08-16-21	FABRICATION		

CUSTOMER	LAKE ERIE CONSTRUCTION COMPANY
CONTRACTOR	
ARCH/ENG	
REFERENCE	
ITEM	
FINISH	SEE NOTES-SHT E400

DRAWN BY	CHECKED BY	MRH NO	JOB MGR	DWG STATUS	JOB NO.	TOTAL SHEETS	SHEET
MRH 07-11-21	SRF 08-12-21	1914	JL	FABRICATION 08-16-21	19-1108		432

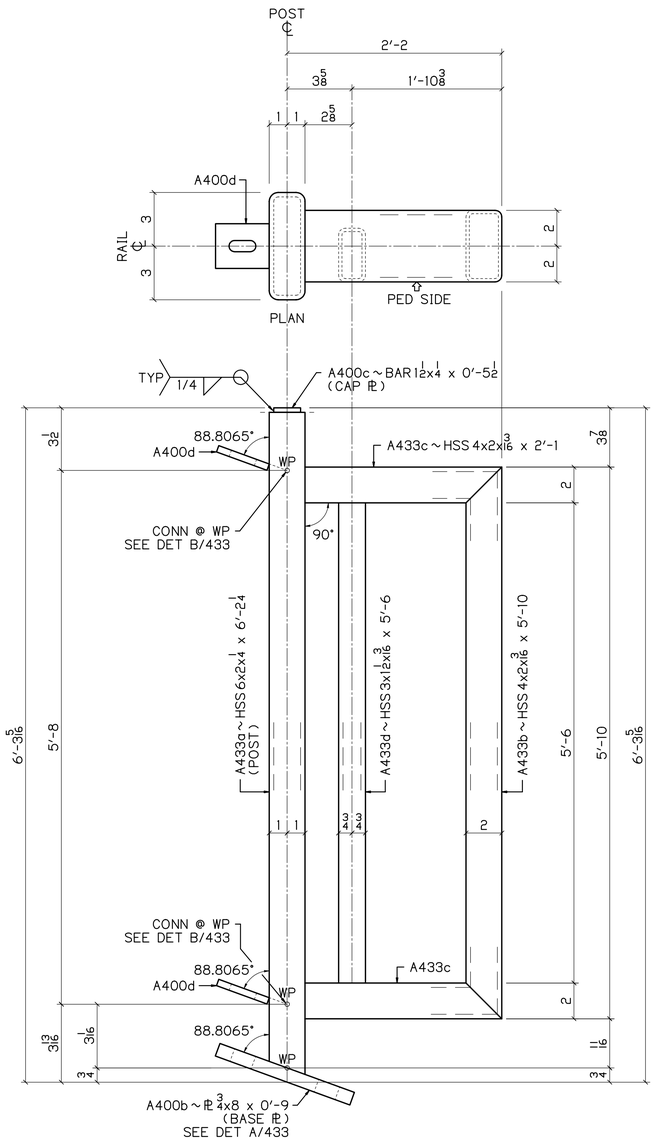

1 ~ A433

POSTS
PEDESTRIAN SIDE SHOWN

1/4 | 1.1935° / 12

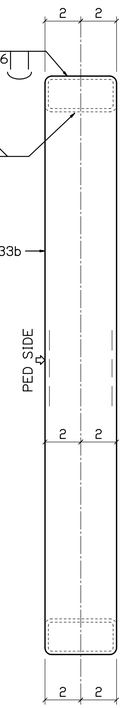

END VIEW

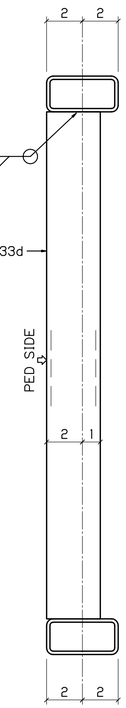

SECTION @ HSS

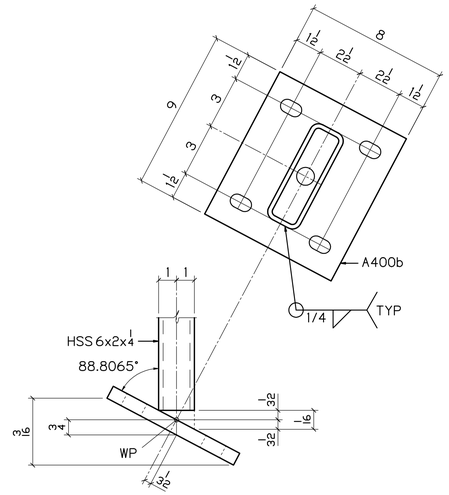

DETAIL A / 433

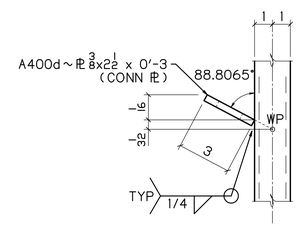

DETAIL B / 433

BILL OF MATERIAL

NO	MK	NO	SUBMK	MATERIAL	FT	IN	REMARKS	SORT
1	A433			END POST				MM
		1	A433a	HSS 6x2x4 1/4	6	2 1/4	SC2E	TS
		1	A433b	HSS 4x2x3/16	5	10	BC2E	TS
		2	A433c	HSS 4x2x3/16	2	1	SC1E, BC1E	TS
		1	A433d	HSS 3x1 1/2x3/16	5	6	SC2E	TS
		1	A400b	PL 3/4x8	0	9	BASE PL	PL
		1	A400c	BAR 1 1/2x4 1/4	0	5 1/2	CAP PL	B
		2	A400d	PL 3/8x2 1/2	0	3	CONN PL	PL

BU-19 BLUE-GREEN LINES
100% COMPLETE 08-16-21

P.H. DREW INC.
2450 N. RACEWAY RD. - P.O. BOX 34295
INDIANAPOLIS, INDIANA 46234
PHONE : (317) 297-5152
FAX : (317) 297-5313

APPROVAL: APPROVED 08-03-21

CUY-IR490 / SR010-2.09 / 19.28

DECORATIVE FENCE

POSTS

REVISION

REV	DATE	DESCRIPTION	BY

APPROVAL RECORD

DATE	ISSUED	APP DATE	APPROVAL STATUS
08-16-21	FABRICATION		

STATE	OHIO
COUNTY	CUYAHOGA (CITY OF CLEVELAND)
PROJECT	3000 (17)
CONTRACT	PID 96833
SECTION	
STRUCTURE	
STATE JOB	
CUSTOMER	LAKE ERIE CONSTRUCTION COMPANY
CONTRACTOR	
ARCH/ENG	
REFERENCE	
ITEM	
FINISH	SEE NOTES - SHT E400

DRAWN BY	CHECKED BY	MRH NO	JOB MGR	DWG STATUS	JOB NO.	TOTAL SHEETS	SHEET
MRH 07-11-21	SRF 08-12-21	1914	JL	FABRICATION 08-16-21	19-1108		433

DN

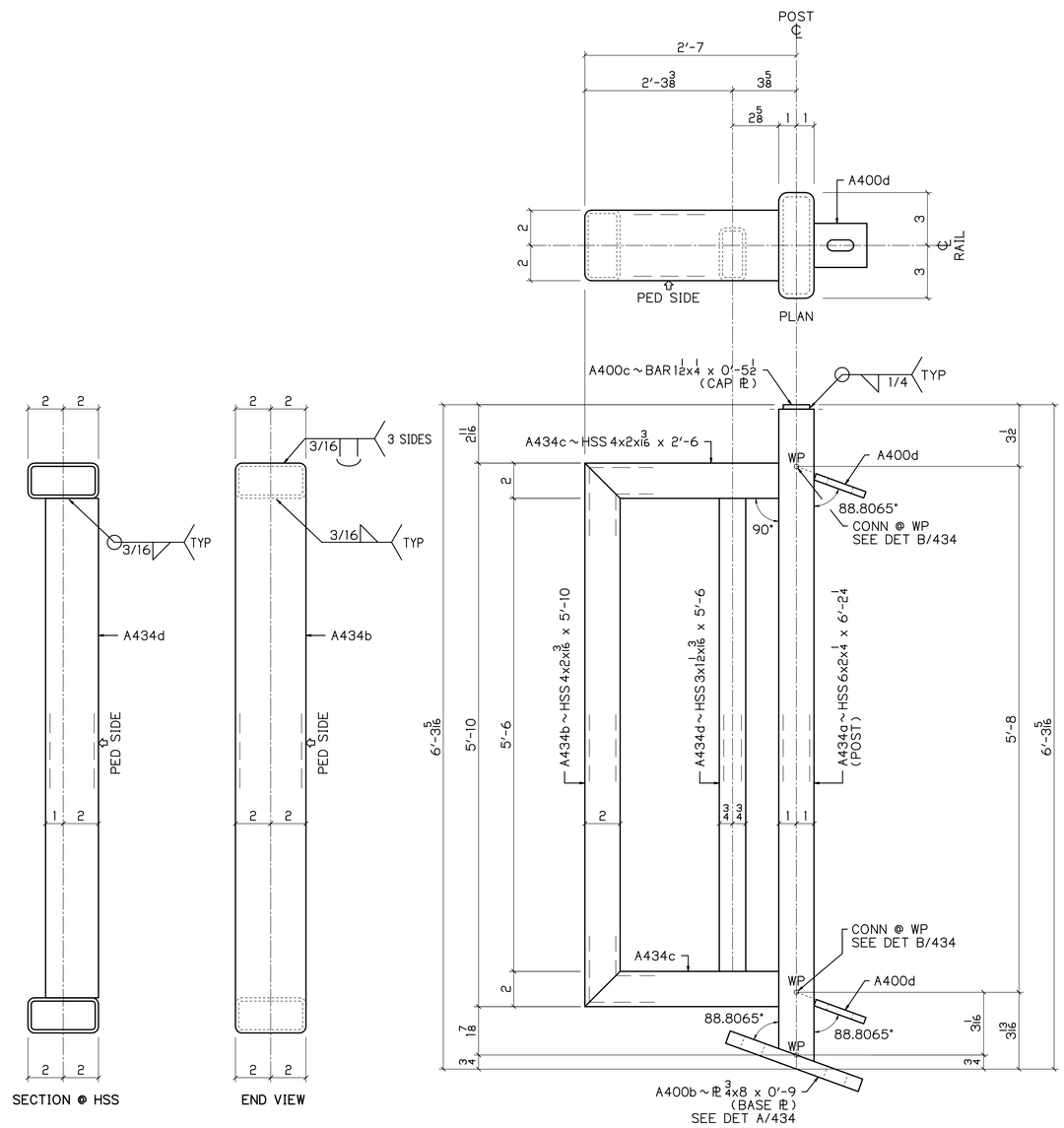

1 ~ A434

POSTS
PEDESTRIAN SIDE SHOWN

1/4 | 1.1935° / 12

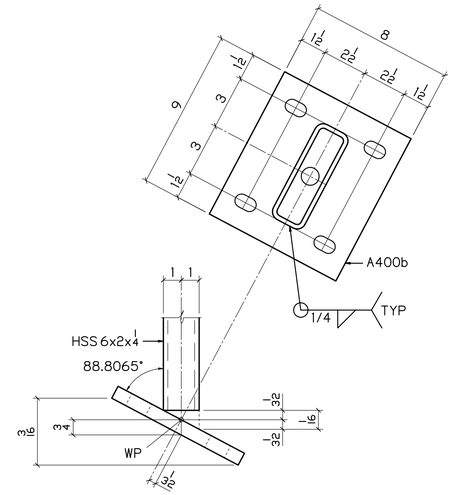

DETAIL A / 434

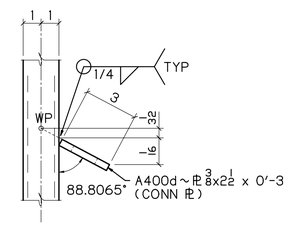

DETAIL B / 434

BILL OF MATERIAL

NO	MK	NO	SUBMK	MATERIAL	FT	IN	REMARKS	SORT
1	A434			END POST				MM
		1	A434a	HSS 6x2x1/4	6	1/4	SC2E	TS
		1	A434b	HSS 4x2x3/16	5	10	BC2E	TS
		2	A434c	HSS 4x2x3/16	2	6	SC1E, BC1E	TS
		1	A434d	HSS 3x1 1/2x3/16	5	6	SC2E	TS
		1	A400b	ℙ 3/4x8	0	9	BASE ℙ	PL
		1	A400c	BAR 1 1/2x1/4	0	5 1/2	CAP ℙ	B
		2	A400d	ℙ 3/8x2 1/2	0	3	CONN ℙ	PL

BU-19 BLUE-GREEN LINES
100% COMPLETE 08-16-21

P.H. DREW INC.
2450 N. RACEWAY RD. - P.O. BOX 34295
INDIANAPOLIS, INDIANA 46234
PHONE : (317) 297-5152
FAX : (317) 297-5313

APPROVAL: APPROVED 08-03-21

CUY-IR490 / SR010-2.09 / 19.28

DECORATIVE FENCE

POSTS

REVISION

REV	DATE	DESCRIPTION	BY

STATE	OHIO
COUNTY	CUYAHOGA (CITY OF CLEVELAND)
PROJECT	3000 (17)
CONTRACT	PID 96833
SECTION	
STRUCTURE	
STATE JOB	

APPROVAL RECORD

DATE	ISSUED	APP DATE	APPROVAL STATUS
08-16-21	FABRICATION		

CUSTOMER	LAKE ERIE CONSTRUCTION COMPANY
CONTRACTOR	
ARCH/ENG	
REFERENCE	
ITEM	
FINISH	SEE NOTES - SHT E400

DRAWN BY	CHECKED BY	MRH NO	JOB MGR	DWG STATUS	JOB NO.	TOTAL SHEETS	SHEET
MRH 07-11-21	SRF 08-12-21	1914	JL	FABRICATION 08-16-21	19-1108		434

DN

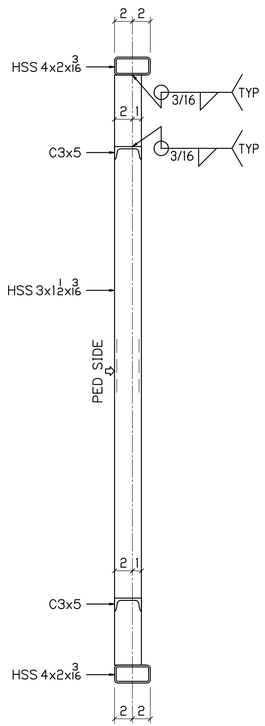

WELD DETAIL
FOR SECTION @ HSS

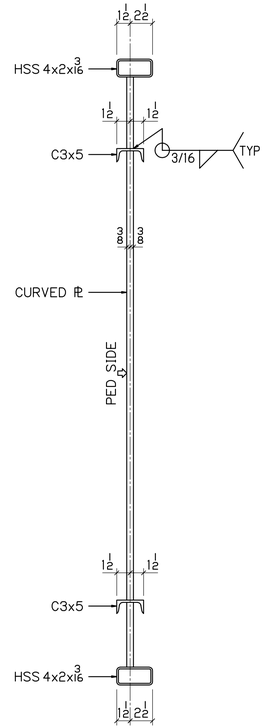

WELD DETAIL
FOR SECTION @ CURVED PL

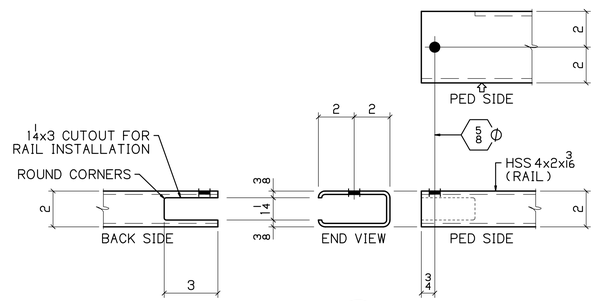

DETAIL A 435

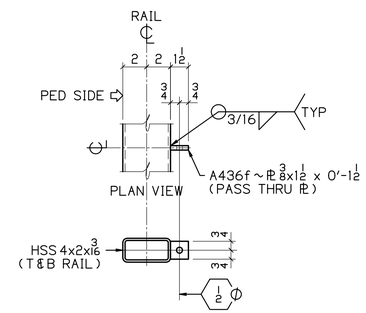

PASS THRU PL

DETAIL B 435

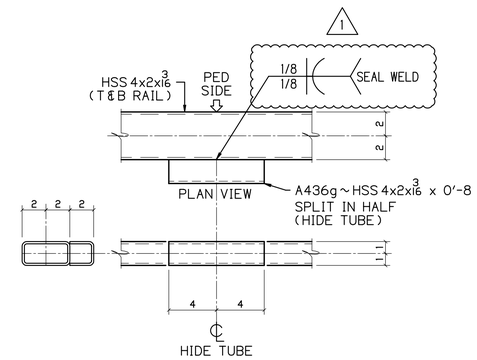

HIDE TUBE DETAIL

DETAIL C 435

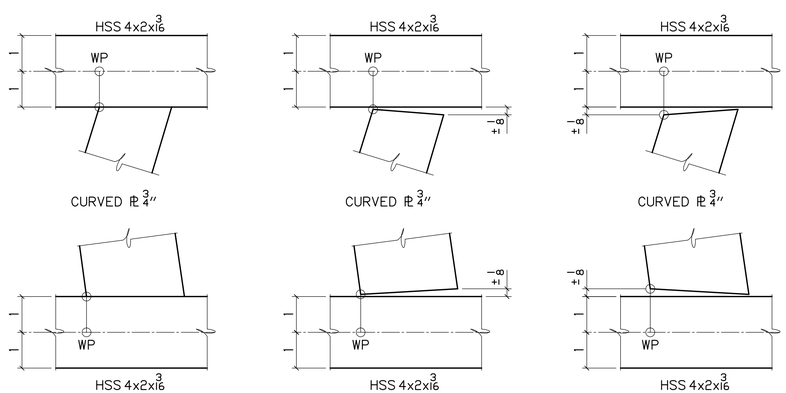

TYP CURVED PL WP DETAILS

BU-19 BLUE-GREEN LINES
100% COMPLETE 08-13-21

P.H. DREW INC.
2450 N. RACEWAY RD. - P.O. BOX 34295
INDIANAPOLIS, INDIANA 46234
PHONE : (317) 297-5152
FAX : (317) 297-5313

APPROVAL
APPROVED 08-03-21

CUY-IR490 / SR010-2.09 / 19.28

DECORATIVE FENCE

RAIL PANEL STD DETAILS

REVISION

REV	DATE	DESCRIPTION	BY
1	08-14-21	REV WELD	MRH

APPROVAL RECORD

DATE	ISSUED	APP DATE	APPROVAL STATUS
08-16-21	FABRICATION		

STATE	OHIO
COUNTY	CUYAHOGA (CITY OF CLEVELAND)
PROJECT	3000 (17)
CONTRACT	PID 96833
SECTION	
STRUCTURE	
STATE JOB	
CUSTOMER	LAKE ERIE CONSTRUCTION COMPANY
CONTRACTOR	
ARCH/ENG	
REFERENCE	
ITEM	
FINISH	SEE NOTES - SHT E400

DRAWN BY	CHECKED BY	MRH NO	JOB MGR	DWG STATUS	JOB NO.	TOTAL SHEETS	SHEET
MRH 07-21-21	SRF 08-12-21	1914	JL	FABRICATION 08-16-21	19-1108		435

SEE SHT 435 FOR DETAILS

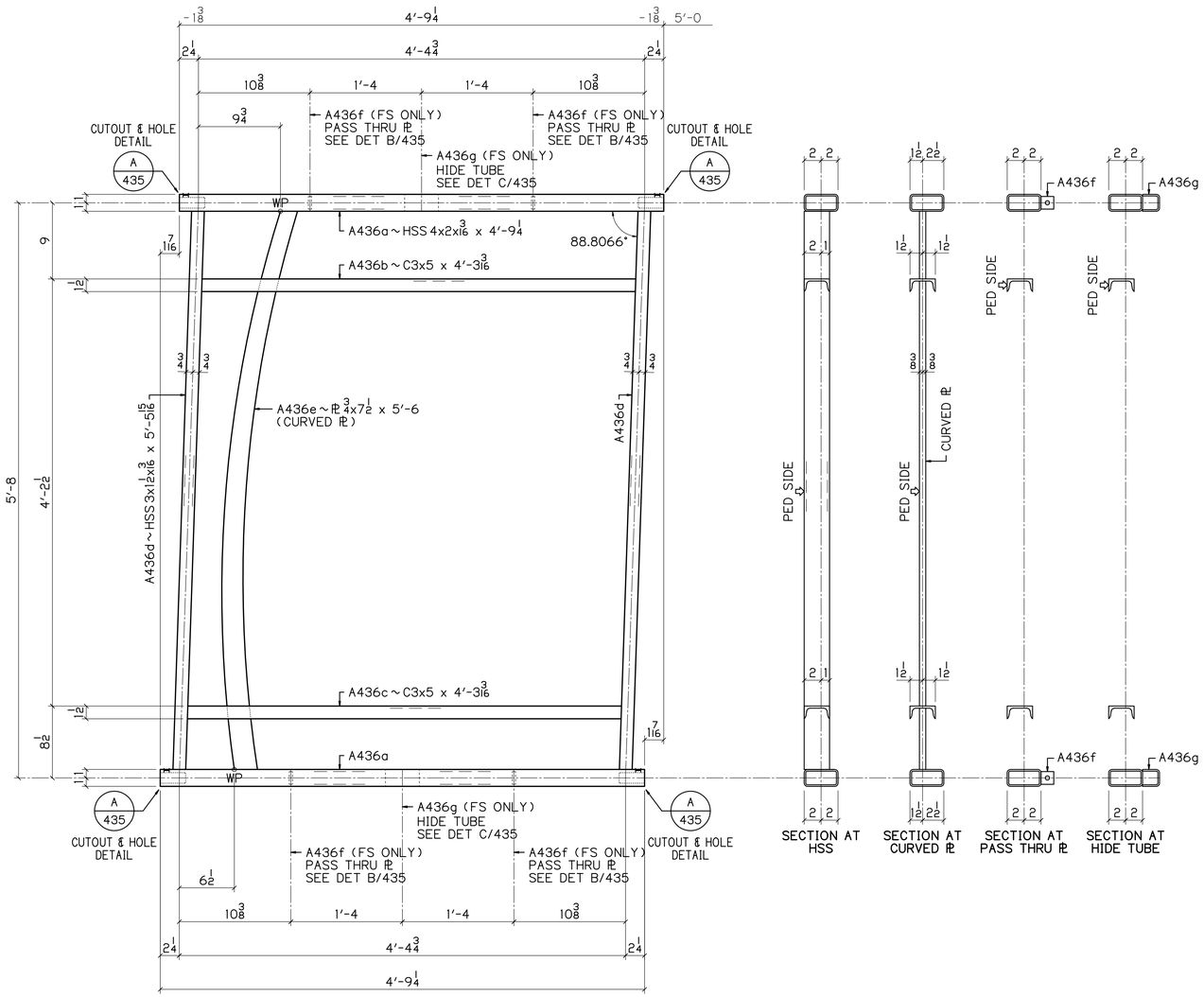

10 ~ A436

RAIL PANELS
PEDESTRIAN SIDE SHOWN

1.1934 1/4 / 12

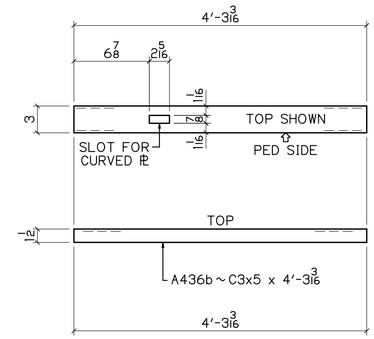

DETAIL OF A436b

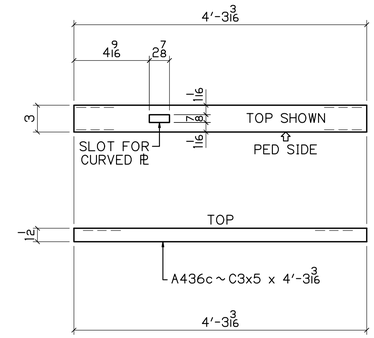

DETAIL OF A436c

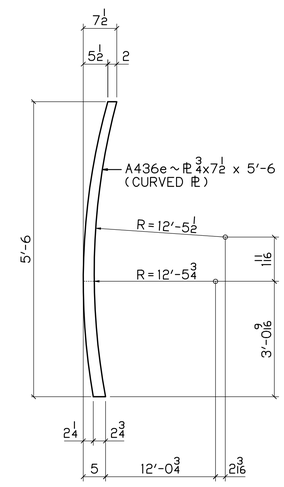

DETAIL OF A436e
CURVED PL

UP

BILL OF MATERIAL

NO	MK	NO	SUBMK	MATERIAL	FT	IN	REMARKS	SORT
10	A436			RAIL PANELS				MM
		20	A436a	HSS 4x2x3/16	4	9 1/4	SC2E	TS
		10	A436b	C3x5	4	3 3/16	SC2E	C
		10	A436c	C3x5	4	3 3/16	SC2E	C
		20	A436d	HSS 3x1 1/2x3/16	5	5 15/16	SC2E	TS
		10	A436e	PL 3/4x7 1/2	5	6	CURVED PL	PL
		40	A436f	PL 3/8x1 1/2	0	1 1/2	PASS THRU PL	PL
		20	A436g	HSS 4x2x3/16	0	8	SPLIT IN HALF	TS

BU-19 BLUE-GREEN LINES
100% COMPLETE 08-16-21

P.H. DREW INC.
2450 N. RACEWAY RD. - P.O. BOX 34295
INDIANAPOLIS, INDIANA 46234
PHONE : (317) 297-5152
FAX : (317) 297-5313

APPROVAL: APPROVED 08-03-21

CUY-IR490 / SR010-2.09 / 19.28

DECORATIVE FENCE

RAIL PANELS

REVISION

REV	DATE	DESCRIPTION	BY

APPROVAL RECORD

DATE	ISSUED	APP DATE	APPROVAL STATUS
08-16-21	FABRICATION		

STATE	OHIO
COUNTY	CUYAHOGA (CITY OF CLEVELAND)
PROJECT	3000 (17)
CONTRACT	PID 96833
SECTION	
STRUCTURE	
STATE JOB	
CUSTOMER	LAKE ERIE CONSTRUCTION COMPANY
CONTRACTOR	
ARCH/ENG	
REFERENCE	
ITEM	
FINISH	SEE NOTES - SHT E400

DRAWN BY	CHECKED BY	MRH NO	JOB MGR	DWG STATUS	JOB NO.	TOTAL SHEETS	SHEET
MRH 07-21-21	SRF 08-12-21	1914	JL	FABRICATION 08-16-21	19-1108		436

SEE SHT 435 FOR DETAILS

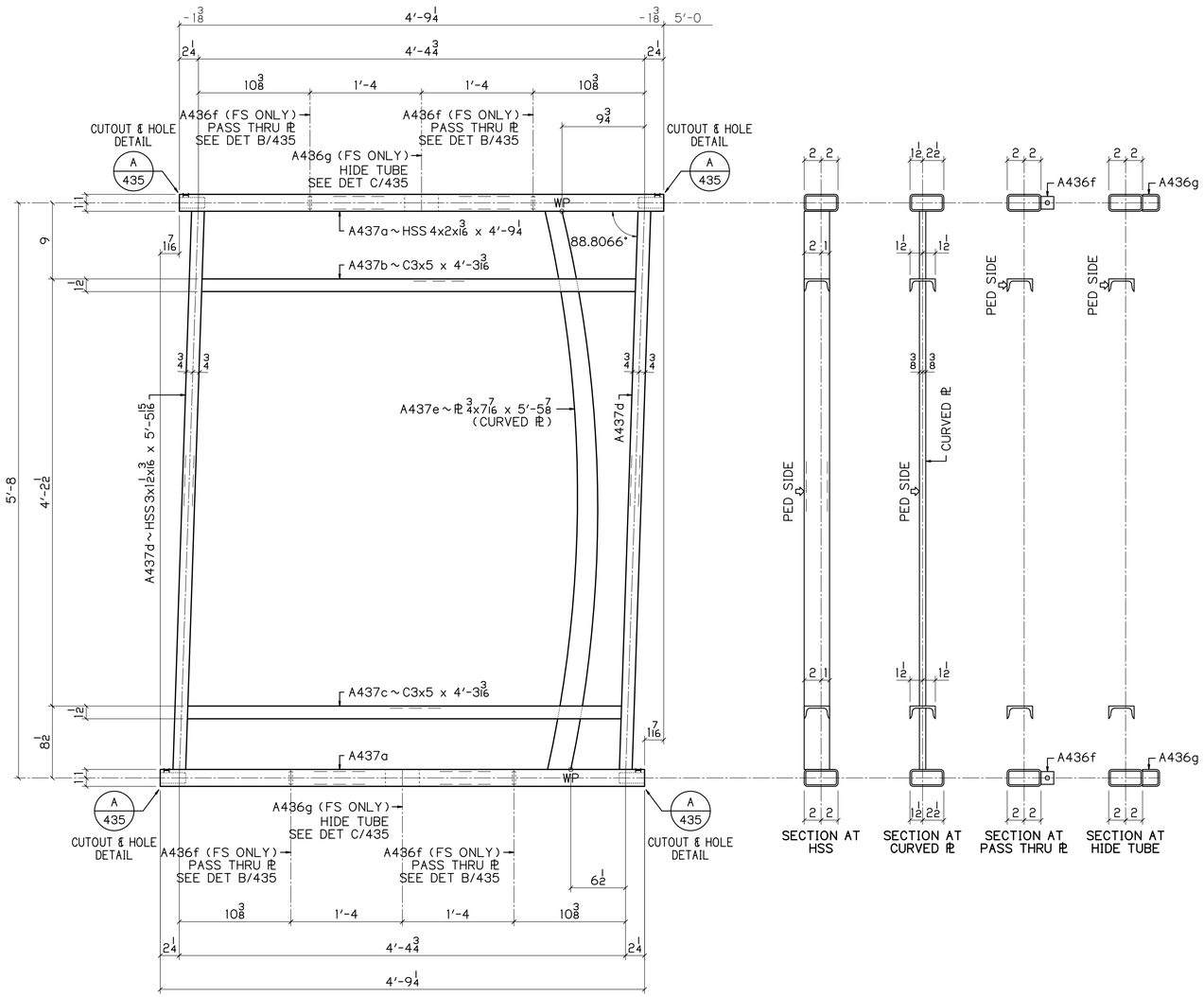

11 ~ A437

RAIL PANELS
PEDESTRIAN SIDE SHOWN

1.1934 1/12

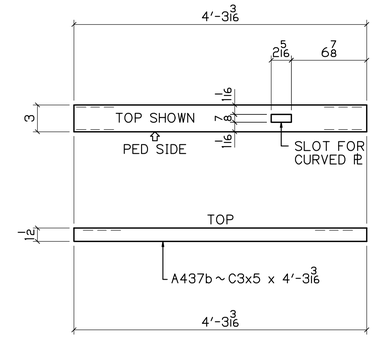

DETAIL OF A437b

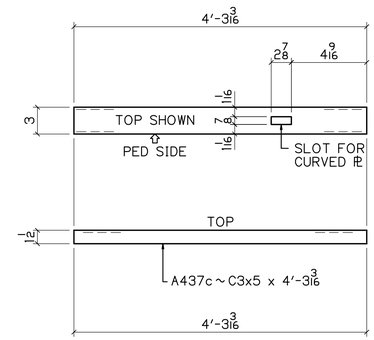

DETAIL OF A437c

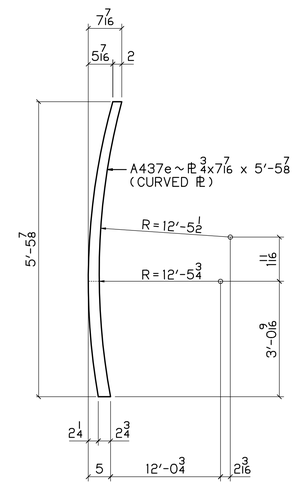

DETAIL OF A437e
CURVED PL

UP

BILL OF MATERIAL

NO	MK	NO	SUBMK	MATERIAL	FT	IN	REMARKS	SORT
11	A437			RAIL PANELS				MM
		22	A437a	HSS 4x2x3/16	4	9 1/4	SC2E	TS
		11	A437b	C3x5	4	3 3/16	SC2E	C
		11	A437c	C3x5	4	3 3/16	SC2E	C
		22	A437d	HSS 3x1 1/2x3/16	5	5 15/16	SC2E	TS
		11	A437e	PL 3/4x7/16	5	5 7/8	CURVED PL	PL
		44	A436f	PL 3/8x1 1/2	0	1 1/2	PASS THRU PL	PL
		22	A436g	HSS 4x2x3/16	0	8	SPLIT IN HALF	TS

BU-19 BLUE-GREEN LINES
100% COMPLETE 08-16-21

P.H. DREW INC.
2450 N. RACEWAY RD. - P.O. BOX 34295
INDIANAPOLIS, INDIANA 46234
PHONE : (317) 297-5152
FAX : (317) 297-5313

APPROVAL
APPROVED 08-03-21

CUY-IR490 / SR010-2.09 / 19.28

DECORATIVE FENCE

RAIL PANELS

REVISION	REV	DATE	DESCRIPTION	BY

APPROVAL RECORD	DATE	ISSUED	APP DATE	APPROVAL STATUS
	08-16-21	FABRICATION		

STATE	OHIO
COUNTY	CUYAHOGA (CITY OF CLEVELAND)
PROJECT	3000 (17)
CONTRACT	PID 96833
SECTION	
STRUCTURE	
STATE JOB	
CUSTOMER	LAKE ERIE CONSTRUCTION COMPANY
CONTRACTOR	
ARCH/ENG	
REFERENCE	
ITEM	
FINISH	SEE NOTES - SHT E400

DRAWN BY	CHECKED BY	MRH NO	JOB MGR	DWG STATUS	JOB NO.	TOTAL SHEETS	SHEET
MRH 07-21-21	SRF 08-12-21	1914	JL	FABRICATION 08-16-21	19-1108		437

SEE SHT 435 FOR DETAILS

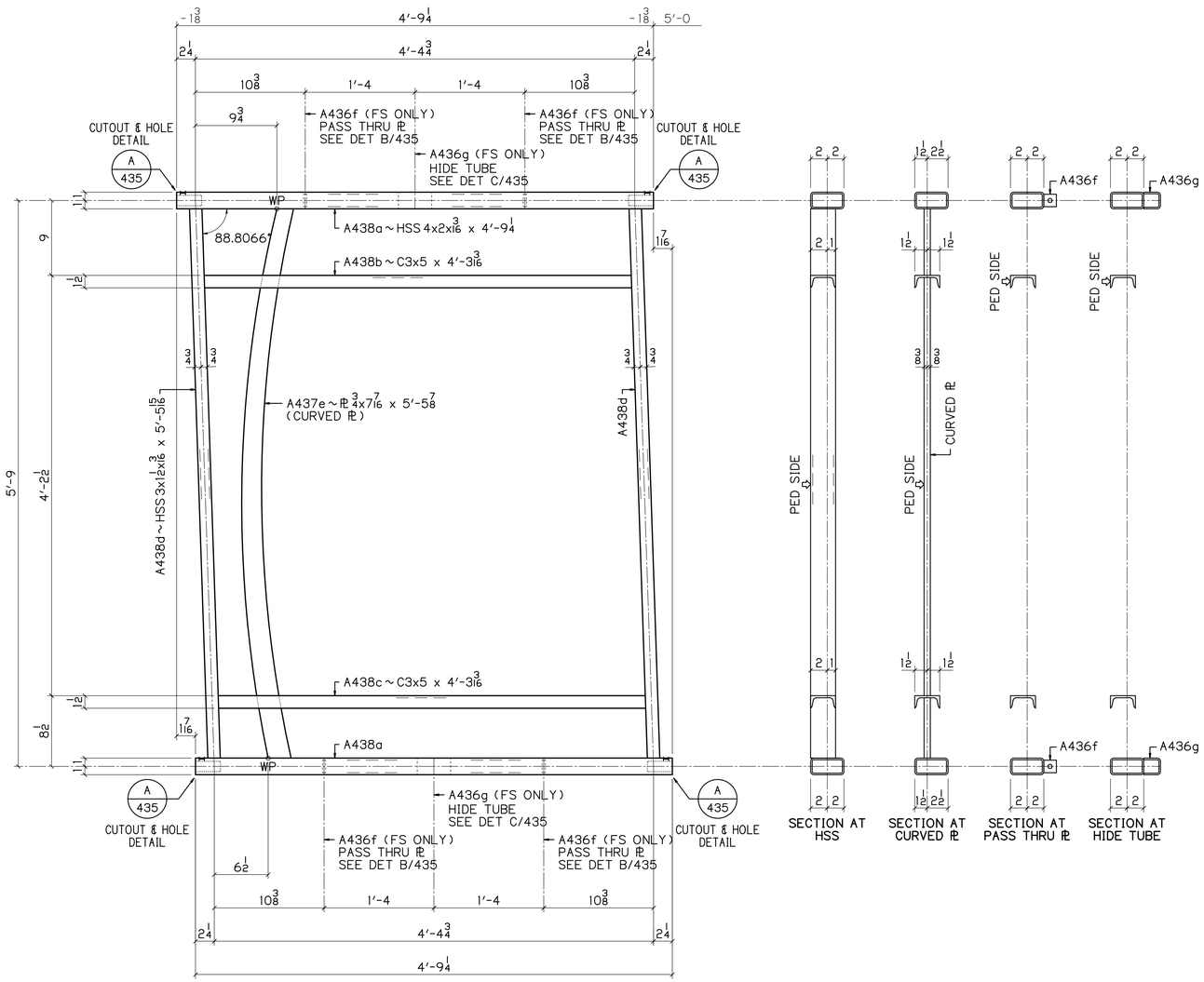

7 ~ A438
RAIL PANELS
PEDESTRIAN SIDE SHOWN

1/4 | 1.1934* / 12

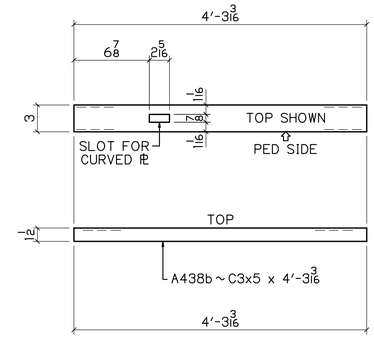

DETAIL OF A438b

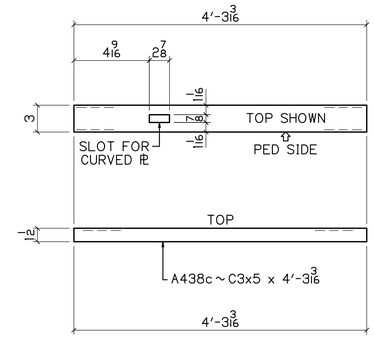

DETAIL OF A438c

BILL OF MATERIAL

NO	MK	NO	SUBMK	MATERIAL	FT	IN	REMARKS	SORT
7	A438			RAIL PANELS				MM
		14	A438a	HSS 4x2x3/16	4	9 1/4	SC2E	TS
		7	A438b	C3x5	4	3 3/16	SC2E	C
		7	A438c	C3x5	4	3 3/16	SC2E	C
		14	A438d	HSS 3x1 1/2x3/16	5	5 15/16	SC2E	TS
		7	A437e	PL 3/4x7/16	5	5 7/8	CURVED PL	PL
		28	A436f	PL 3/8x1 1/2	0	1 1/2	PASS THRU PL	PL
		14	A436g	HSS 4x2x3/16	0	8	SPLIT IN HALF	TS

BU-19 BLUE-GREEN LINES
100% COMPLETE 08-16-21

P.H. DREW INC.
2450 N. RACEWAY RD. - P.O. BOX 34295
INDIANAPOLIS, INDIANA 46234
PHONE : (317) 297-5152
FAX : (317) 297-5313

APPROVAL
APPROVED 08-03-21

CUY-IR490 / SR010-2.09 / 19.28

DECORATIVE FENCE

RAIL PANELS

REVISION

REV	DATE	DESCRIPTION	BY

STATE	OHIO
COUNTY	CUYAHOGA (CITY OF CLEVELAND)
PROJECT	3000 (17)
CONTRACT	PID 96833
SECTION	
STRUCTURE	
STATE JOB	

APPROVAL RECORD

DATE	ISSUED	APP DATE	APPROVAL STATUS
08-16-21	FABRICATION		

CUSTOMER	LAKE ERIE CONSTRUCTION COMPANY
CONTRACTOR	
ARCH/ENG	
REFERENCE	
ITEM	
FINISH	SEE NOTES - SHT E400

DRAWN BY	CHECKED BY	MRH NO	JOB MGR	DWG STATUS	JOB NO.	TOTAL SHEETS	SHEET
MRH 07-21-21	SRF 08-12-21	1914	JL	FABRICATION 08-16-21	19-1108		438

DN

SEE SHT 435 FOR DETAILS

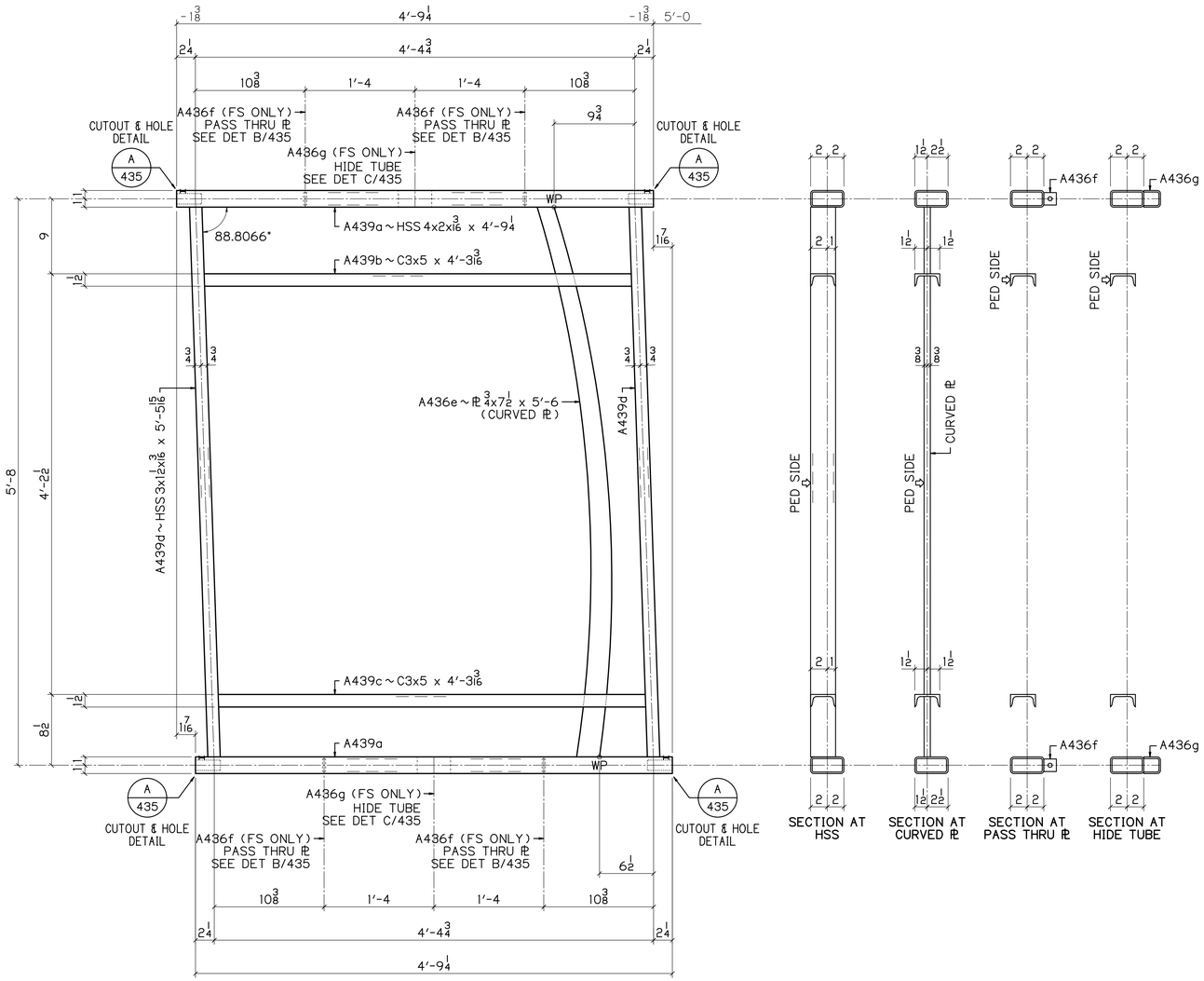

6 ~ A439

RAIL PANELS

PEDESTRIAN SIDE SHOWN

1/4 | 1.1934° / 12

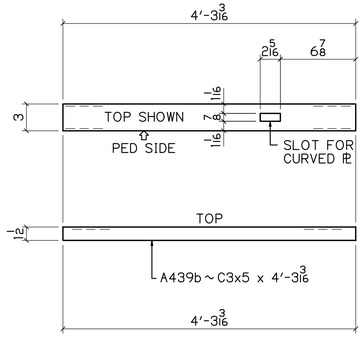

DETAIL OF A439b

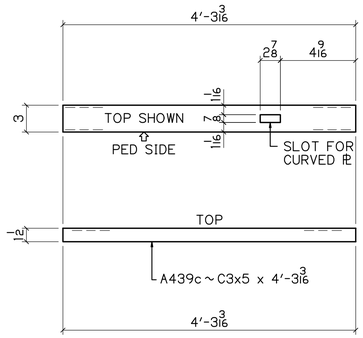

DETAIL OF A439c

BILL OF MATERIAL

NO	MK	NO	SUBMK	MATERIAL	FT	IN	REMARKS	SORT
6	A439			RAIL PANELS				MM
		12	A439a	HSS 4x2x3/16	4	9 1/4	SC2E	TS
		6	A439b	C3x5	4	3 3/16	SC2E	C
		6	A439c	C3x5	4	3 3/16	SC2E	C
		12	A439d	HSS 3x1 1/2x3/16	5	5 15/16	SC2E	TS
		6	A436e	PL 3/4x7 1/2	5	6	CURVED PL	PL
		24	A436f	PL 3/8x1 1/2	0	1 1/2	PASS THRU PL	PL
		12	A436g	HSS 4x2x3/16	0	8	SPLIT IN HALF	TS

BU-19 BLUE-GREEN LINES

100% COMPLETE 08-16-21

P.H. DREW INC.

2450 N. RACEWAY RD. - P.O. BOX 34295
INDIANAPOLIS, INDIANA 46234

PHONE : (317) 297-5152
FAX : (317) 297-5313

APPROVAL: APPROVED 08-03-21

CUY-IR490 / SR010-2.09 / 19.28

DECORATIVE FENCE

RAIL PANELS

REVISION

REV	DATE	DESCRIPTION	BY

STATE	OHIO
COUNTY	CUYAHOGA (CITY OF CLEVELAND)
PROJECT	3000 (17)
CONTRACT	PID 96833
SECTION	
STRUCTURE	
STATE JOB	

APPROVAL RECORD

DATE	ISSUED	APP DATE	APPROVAL STATUS
08-16-21	FABRICATION		

CUSTOMER	LAKE ERIE CONSTRUCTION COMPANY
CONTRACTOR	
ARCH/ENG	
REFERENCE	
ITEM	
FINISH	SEE NOTES - SHT E400

DRAWN BY	CHECKED BY	MRH NO	JOB MGR	DWG STATUS	JOB NO.	TOTAL SHEETS	SHEET
MRH 07-21-21	SRF 08-12-21	1914	JL	FABRICATION 08-16-21	19-1108		439

DN

SEE SHT 435 FOR DETAILS

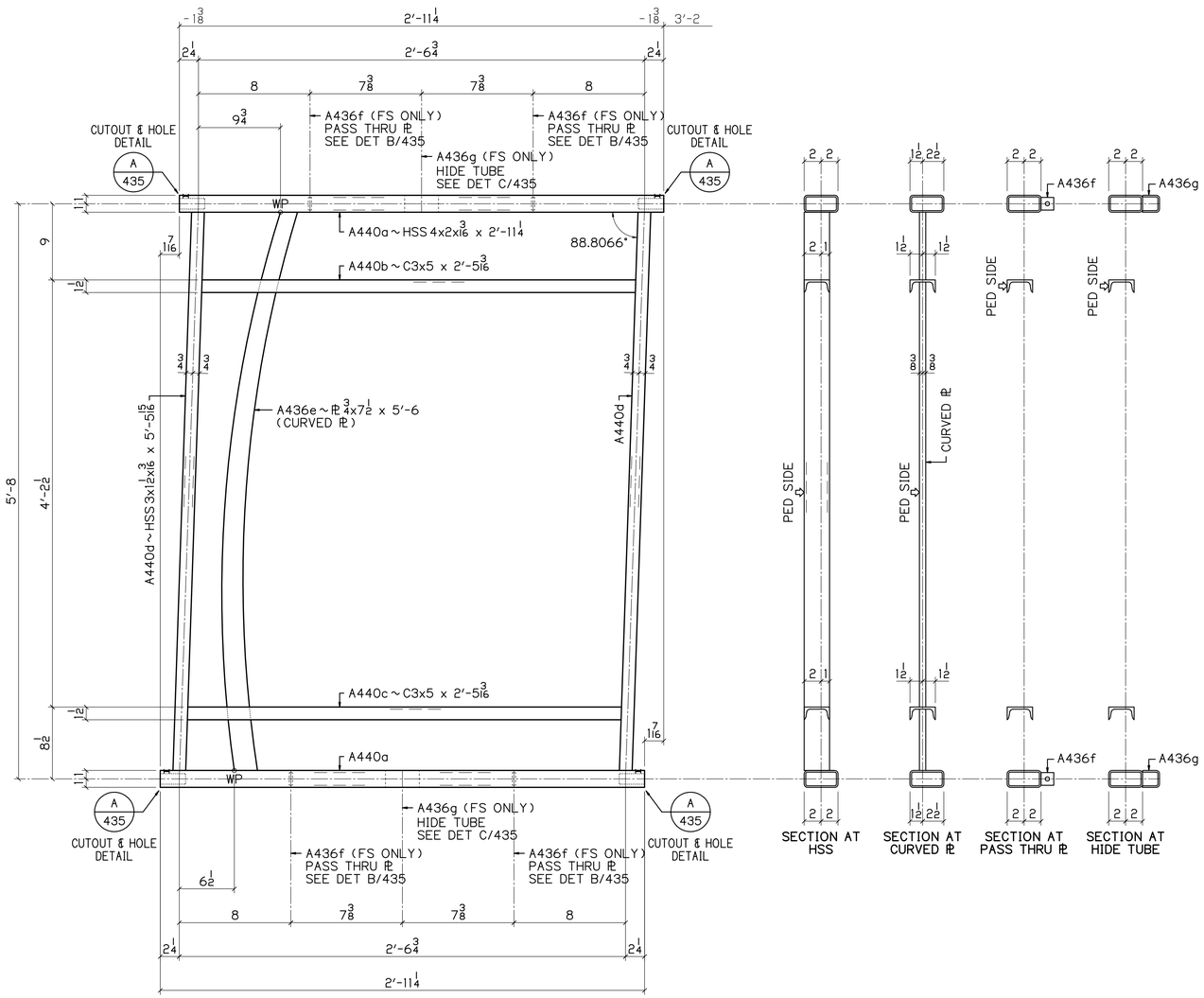

1 ~ A440
RAIL PANELS
PEDESTRIAN SIDE SHOWN

1.1934 1/4 / 12

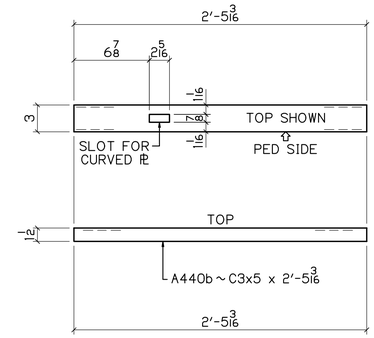

DETAIL OF A440b

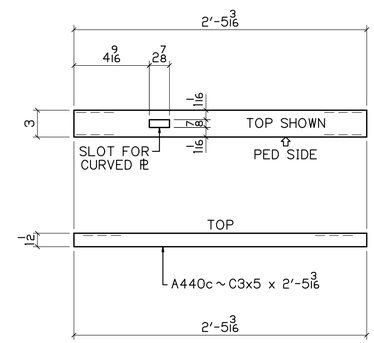

DETAIL OF A440c

UP

BILL OF MATERIAL

NO	MK	NO	SUBMK	MATERIAL	FT	IN	REMARKS	SORT
1	A440			RAIL PANELS				MM
		2	A440a	HSS 4x2x3/16	2	11 1/4	SC2E	TS
		1	A440b	C3x5	2	5 3/16	SC2E	C
		1	A440c	C3x5	2	5 3/16	SC2E	C
		2	A440d	HSS 3x1 1/2x3/16	5	5 15/16	SC2E	TS
		1	A436e	PL 3/4x7 1/2	5	6	CURVED PL	PL
		4	A436f	PL 3/8x1 1/2	0	1 1/2	PASS THRU PL	PL
		2	A436g	HSS 4x2x3/16	0	8	SPLIT IN HALF	TS

BU-19 BLUE-GREEN LINES
100% COMPLETE 08-16-21

P.H. DREW INC.
2450 N. RACEWAY RD. - P.O. BOX 34295
INDIANAPOLIS, INDIANA 46234
PHONE : (317) 297-5152
FAX : (317) 297-5313

APPROVAL: APPROVED 08-03-21

CUY-IR490 / SR010-2.09 / 19.28

DECORATIVE FENCE

RAIL PANELS

REVISION

REV	DATE	DESCRIPTION	BY

APPROVAL RECORD

DATE	ISSUED	APP DATE	APPROVAL STATUS
08-16-21	FABRICATION		

STATE	OHIO
COUNTY	CUYAHOGA (CITY OF CLEVELAND)
PROJECT	3000 (17)
CONTRACT	PID 96833
SECTION	
STRUCTURE	
STATE JOB	
CUSTOMER	LAKE ERIE CONSTRUCTION COMPANY
CONTRACTOR	
ARCH/ENG	
REFERENCE	
ITEM	
FINISH	SEE NOTES - SHT E400

DRAWN BY	CHECKED BY	MRH NO	JOB MGR	DWG STATUS	JOB NO.	TOTAL SHEETS	SHEET
MRH 07-21-21	SRF 08-12-21	1914	JL	FABRICATION 08-16-21	19-1108		440

SEE SHT 435 FOR DETAILS

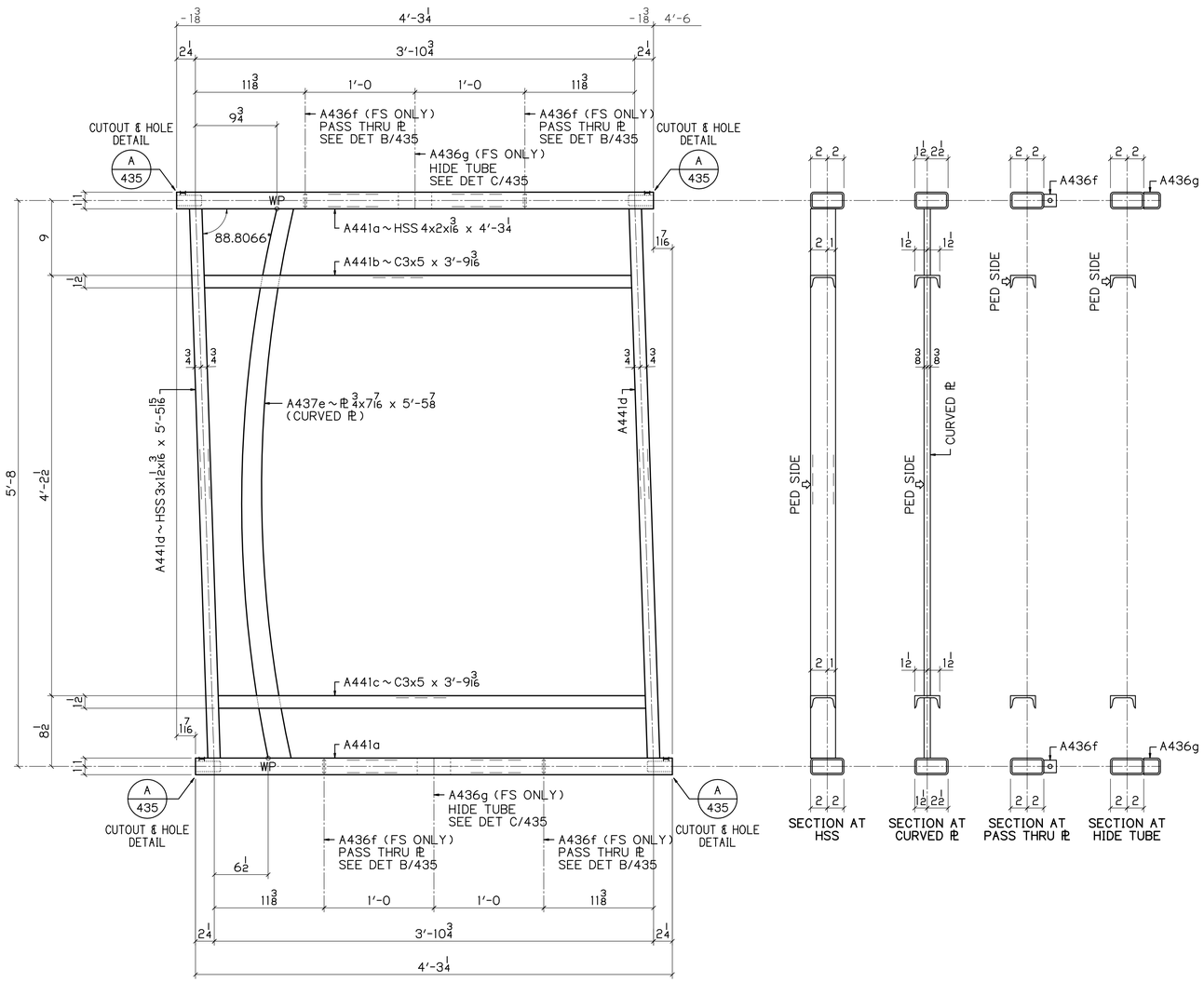

1 ~ A441

RAIL PANELS
PEDESTRIAN SIDE SHOWN

1/4 | 1.1934" / 12

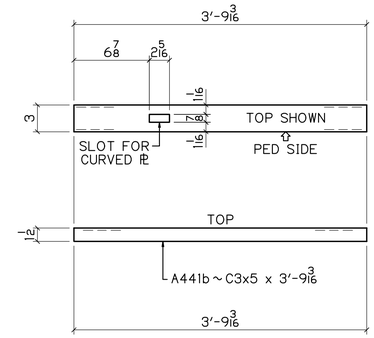

DETAIL OF A441b

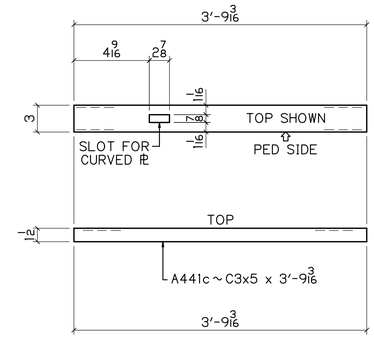

DETAIL OF A441c

BILL OF MATERIAL

NO	MK	NO	SUBMK	MATERIAL	FT	IN	REMARKS	SORT
1	A441			RAIL PANELS				MM
		2	A441a	HSS 4x2x3/16	4	3 1/4	SC2E	TS
		1	A441b	C3x5	3	9 3/16	SC2E	C
		1	A441c	C3x5	3	9 3/16	SC2E	C
		2	A441d	HSS 3x1 1/2x3/16	5	5 15/16	SC2E	TS
		1	A437e	PL 3/4x7/16	5	5 8/8	CURVED PL	PL
		4	A436f	PL 3/8x1 1/2	0	1 1/2	PASS THRU PL	PL
		2	A436g	HSS 4x2x3/16	0	8	SPLIT IN HALF	TS

BU-19 BLUE-GREEN LINES
100% COMPLETE 08-16-21

P.H. DREW INC.
2450 N. RACEWAY RD. - P.O. BOX 34295
INDIANAPOLIS, INDIANA 46234
PHONE : (317) 297-5152
FAX : (317) 297-5313

APPROVAL: APPROVED 08-03-21

CUY-IR490 / SR010-2.09 / 19.28

DECORATIVE FENCE

RAIL PANELS

REVISION

REV	DATE	DESCRIPTION	BY

STATE	OHIO
COUNTY	CUYAHOGA (CITY OF CLEVELAND)
PROJECT	3000 (17)
CONTRACT	PID 96833
SECTION	
STRUCTURE	
STATE JOB	

APPROVAL RECORD

DATE	ISSUED	APP DATE	APPROVAL STATUS
08-16-21	FABRICATION		

CUSTOMER	LAKE ERIE CONSTRUCTION COMPANY
CONTRACTOR	
ARCH/ENG	
REFERENCE	
ITEM	
FINISH	SEE NOTES - SHT E400

DRAWN BY	CHECKED BY	MRH NO	JOB MGR	DWG STATUS	JOB NO.	TOTAL SHEETS	SHEET
MRH 07-21-21	SRF 08-12-21	1914	JL	FABRICATION 08-16-21	19-1108		441

DN

SEE SHT 435 FOR DETAILS

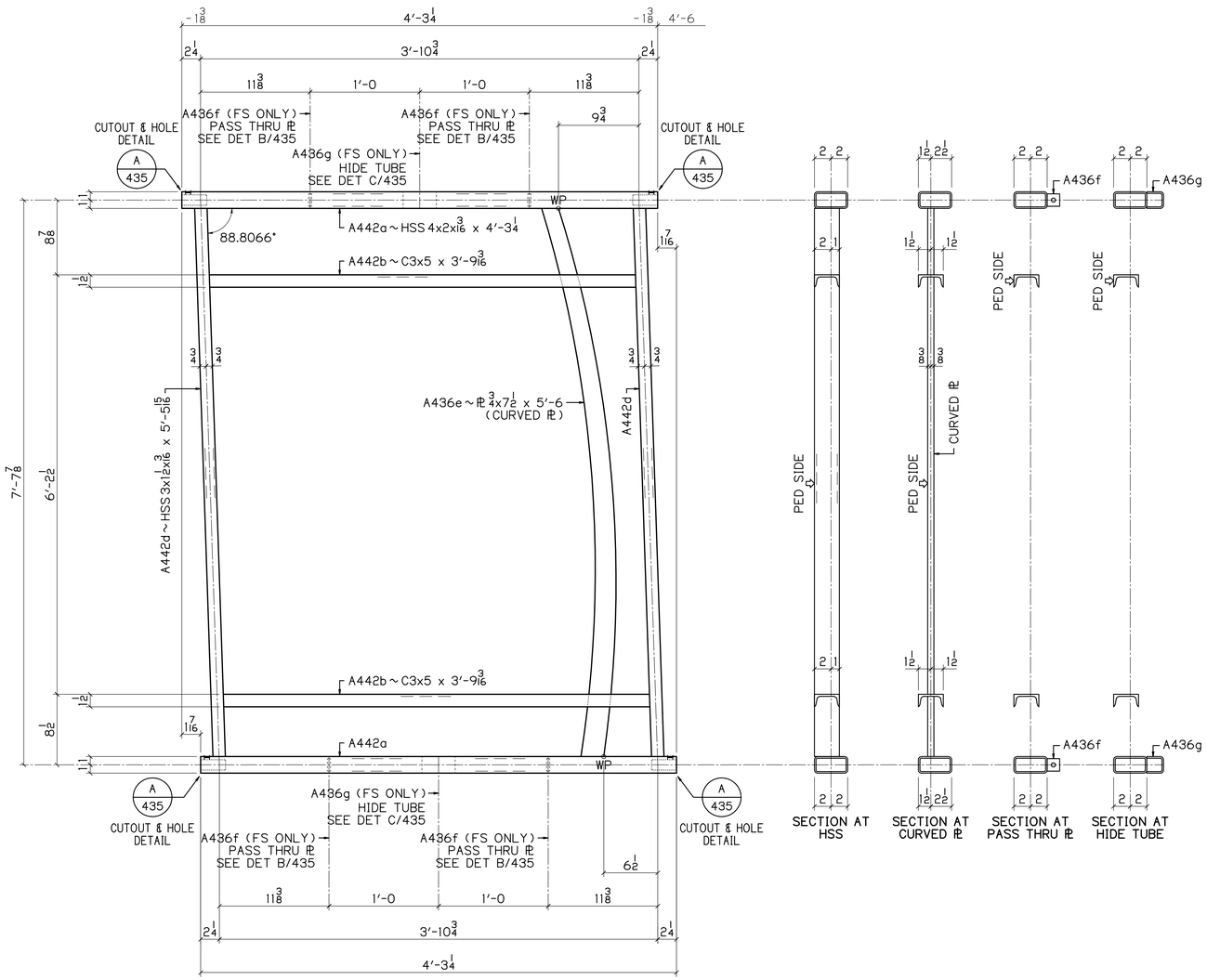

1 ~ A442

RAIL PANELS
PEDESTRIAN SIDE SHOWN

1/4 | 1.1934* / 12

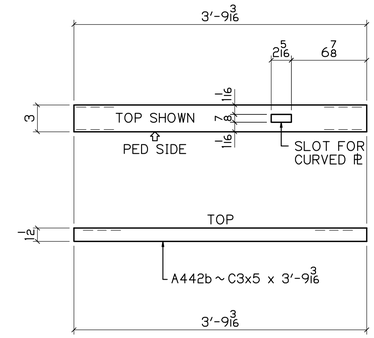

DETAIL OF A442b

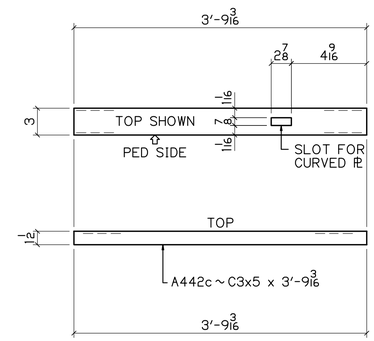

DETAIL OF A442c

BILL OF MATERIAL

NO	MK	NO	SUBMK	MATERIAL	FT	IN	REMARKS	SORT
1	A442			RAIL PANELS				MM
		2	A442a	HSS 4x2x3/16	4	3 1/4	SC2E	TS
		1	A442b	C3x5	3	9 3/16	SC2E	C
		1	A442c	C3x5	3	9 3/16	SC2E	C
		2	A442d	HSS 3x1 1/2x3/16	5	5 15/16	SC2E	TS
		11	A437e	PL 3/4x7/16	5	5 7/8	CURVED PL	PL
		4	A436f	PL 3/8x1 1/2	0	1 1/2	PASS THRU PL	PL
		2	A436g	HSS 4x2x3/16	0	8	SPLIT IN HALF	TS

BU-19 BLUE-GREEN LINES
100% COMPLETE 08-16-21

P.H. DREW INC.
2450 N. RACEWAY RD. - P.O. BOX 34295
INDIANAPOLIS, INDIANA 46234
PHONE : (317) 297-5152
FAX : (317) 297-5313

APPROVAL: APPROVED 08-03-21

CUY-IR490 / SR010-2.09 / 19.28

DECORATIVE FENCE

RAIL PANELS

REVISION

REV	DATE	DESCRIPTION	BY

STATE	OHIO
COUNTY	CUYAHOGA (CITY OF CLEVELAND)
PROJECT	3000 (17)
CONTRACT	PID 96833
SECTION	
STRUCTURE	
STATE JOB	

APPROVAL RECORD

DATE	ISSUED	APP DATE	APPROVAL STATUS
08-16-21	FABRICATION		

CUSTOMER	LAKE ERIE CONSTRUCTION COMPANY
CONTRACTOR	
ARCH/ENG	
REFERENCE	
ITEM	
FINISH	SEE NOTES - SHT E400

DRAWN BY	CHECKED BY	MRH NO	JOB MGR	DWG STATUS	JOB NO.	TOTAL SHEETS	SHEET
MRH 07-21-21	SRF 08-12-21	1914	JL	FABRICATION 08-16-21	19-1108		442

DN

SEE SHT 435 FOR DETAILS

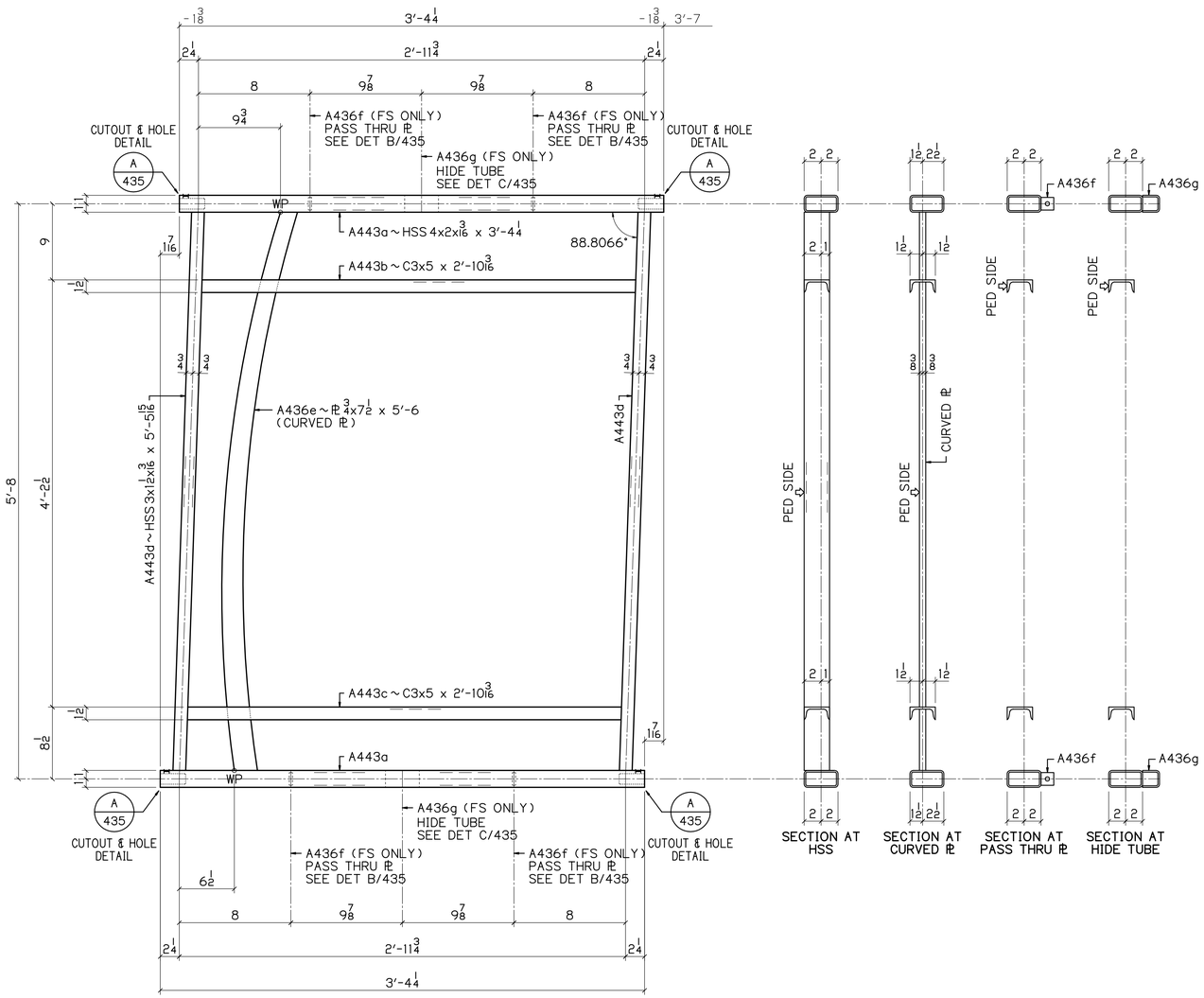

1 ~ A443
RAIL PANELS
PEDESTRIAN SIDE SHOWN

1.1934 1/4 / 12

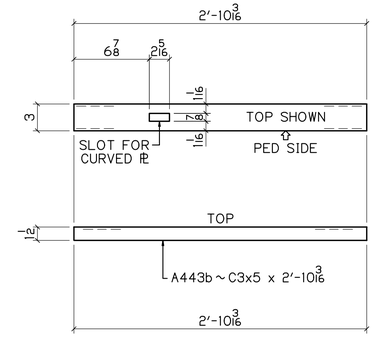

DETAIL OF A443b

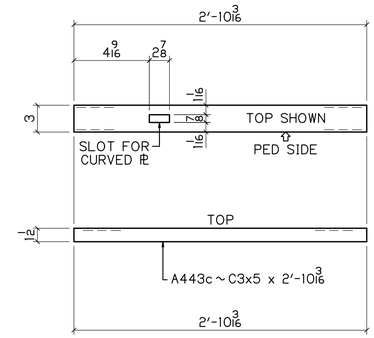

DETAIL OF A443c

UP

BILL OF MATERIAL

NO	MK	NO	SUBMK	MATERIAL	FT	IN	REMARKS	SORT
1	A443			RAIL PANELS				MM
		2	A443a	HSS 4x2x3/16	3	4 1/4	SC2E	TS
		1	A443b	C3x5	2	10 3/16	SC2E	C
		1	A443c	C3x5	2	10 3/16	SC2E	C
		2	A443d	HSS 3x1 1/2x3/16	5	5 15/16	SC2E	TS
		1	A436e	PL 3/4x7 1/2	5	6	CURVED PL	PL
		4	A436f	PL 3/8x1 1/2	0	1 1/2	PASS THRU PL	PL
		2	A436g	HSS 4x2x3/16	0	8	SPLIT IN HALF	TS

BU-19 BLUE-GREEN LINES
100% COMPLETE 08-16-21

P.H. DREW INC.
2450 N. RACEWAY RD. - P.O. BOX 34295
INDIANAPOLIS, INDIANA 46234
PHONE : (317) 297-5152
FAX : (317) 297-5313

APPROVAL: APPROVED 08-03-21

CUY-IR490 / SR010-2.09 / 19.28

DECORATIVE FENCE

RAIL PANELS

REVISION

REV	DATE	DESCRIPTION	BY

APPROVAL RECORD

DATE	ISSUED	APP DATE	APPROVAL STATUS
08-16-21	FABRICATION		

STATE	OHIO
COUNTY	CUYAHOGA (CITY OF CLEVELAND)
PROJECT	3000 (17)
CONTRACT	PID 96833
SECTION	
STRUCTURE	
STATE JOB	
CUSTOMER	LAKE ERIE CONSTRUCTION COMPANY
CONTRACTOR	
ARCH/ENG	
REFERENCE	
ITEM	
FINISH	SEE NOTES - SHT E400

DRAWN BY	CHECKED BY	MRH NO	JOB MGR	DWG STATUS	JOB NO.	TOTAL SHEETS	SHEET
MRH 07-21-21	SRF 08-12-21	1914	JL	FABRICATION 08-16-21	19-1108		443

SEE SHT 435 FOR DETAILS

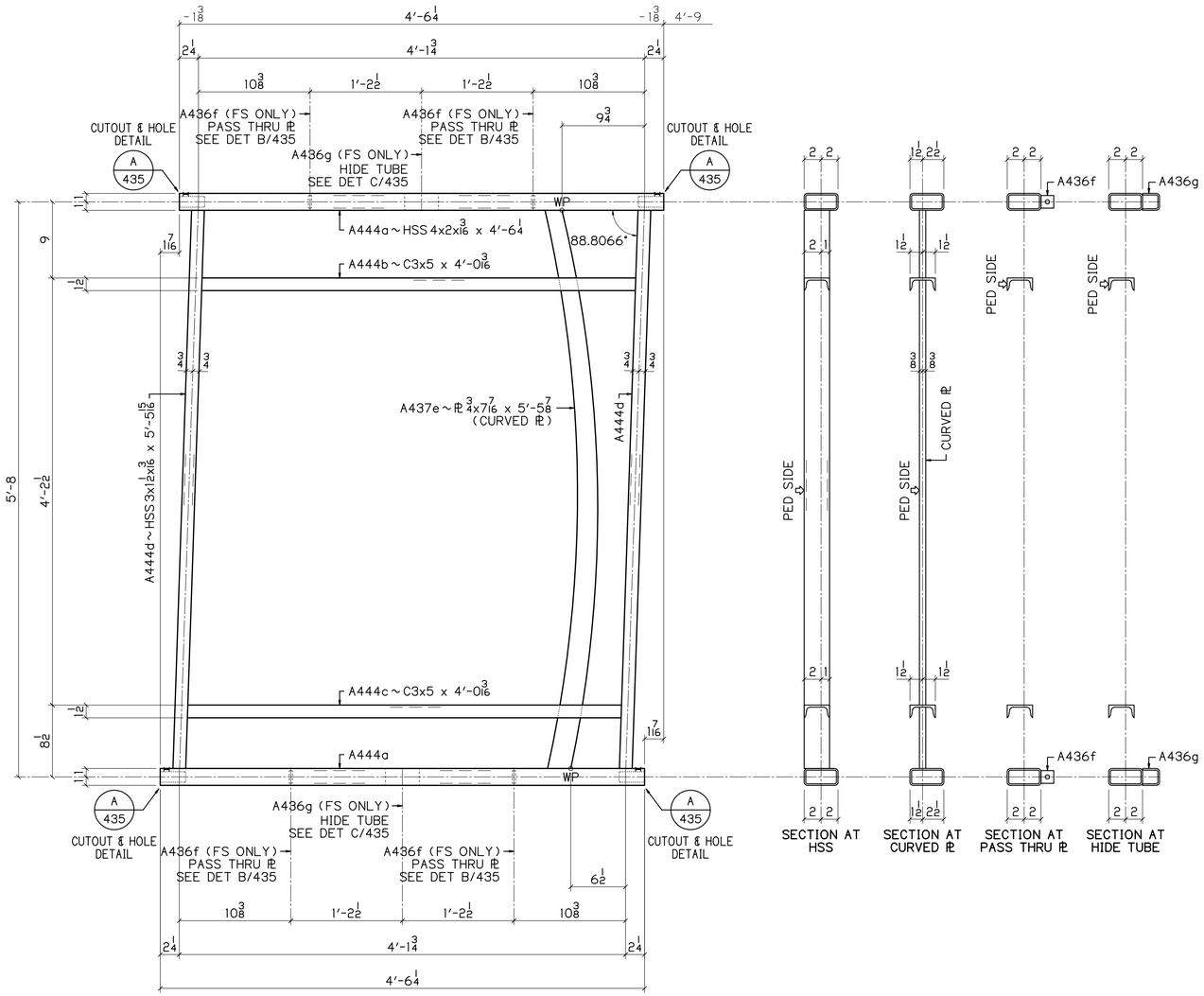

1 ~ A444

RAIL PANELS
PEDESTRIAN SIDE SHOWN

1.1934 1/4 / 12

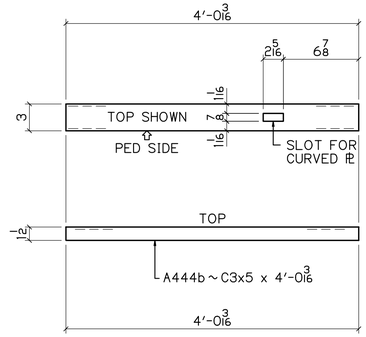

DETAIL OF A444b

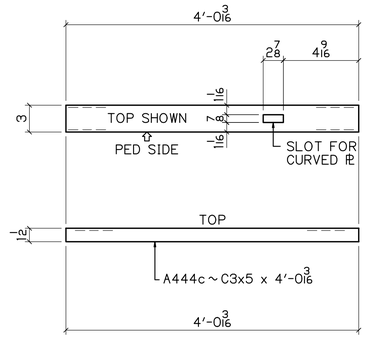

DETAIL OF A444c

UP

BILL OF MATERIAL

NO	MK	NO	SUBMK	MATERIAL	FT	IN	REMARKS	SORT
1	A444			RAIL PANELS				MM
		2	A444a	HSS 4x2x3/16	4	6 1/4	SC2E	TS
		1	A444b	C3x5	4	0 3/16	SC2E	C
		1	A444c	C3x5	4	0 3/16	SC2E	C
		2	A444d	HSS 3x1 1/2x3/16	5	5 15/16	SC2E	TS
		1	A437e	PL 3/4x7/16	5	5 7/8	CURVED PL	PL
		4	A436f	PL 3/8x1 1/2	0	1 1/2	PASS THRU PL	PL
		2	A436g	HSS 4x2x3/16	0	8	SPLIT IN HALF	TS

BU-19 BLUE-GREEN LINES
100% COMPLETE 08-16-21

P.H. DREW INC.
2450 N. RACEWAY RD. - P.O. BOX 34295
INDIANAPOLIS, INDIANA 46234
PHONE : (317) 297-5152
FAX : (317) 297-5313

APPROVAL: APPROVED 08-03-21

CUY-IR490 / SR010-2.09 / 19.28

DECORATIVE FENCE

RAIL PANELS

REVISION

REV	DATE	DESCRIPTION	BY

STATE	OHIO
COUNTY	CUYAHOGA (CITY OF CLEVELAND)
PROJECT	3000 (17)
CONTRACT	PID 96833
SECTION	
STRUCTURE	
STATE JOB	

APPROVAL RECORD

DATE	ISSUED	APP DATE	APPROVAL STATUS
08-16-21	FABRICATION		

CUSTOMER	LAKE ERIE CONSTRUCTION COMPANY
CONTRACTOR	
ARCH/ENG	
REFERENCE	
ITEM	
FINISH	SEE NOTES - SHT E400

DRAWN BY	CHECKED BY	MRH NO	JOB MGR	DWG STATUS	JOB NO.	TOTAL SHEETS	SHEET
MRH 07-21-21	SRF 08-12-21	1914	JL	FABRICATION 08-16-21	19-1108		444

SEE SHT 435 FOR DETAILS

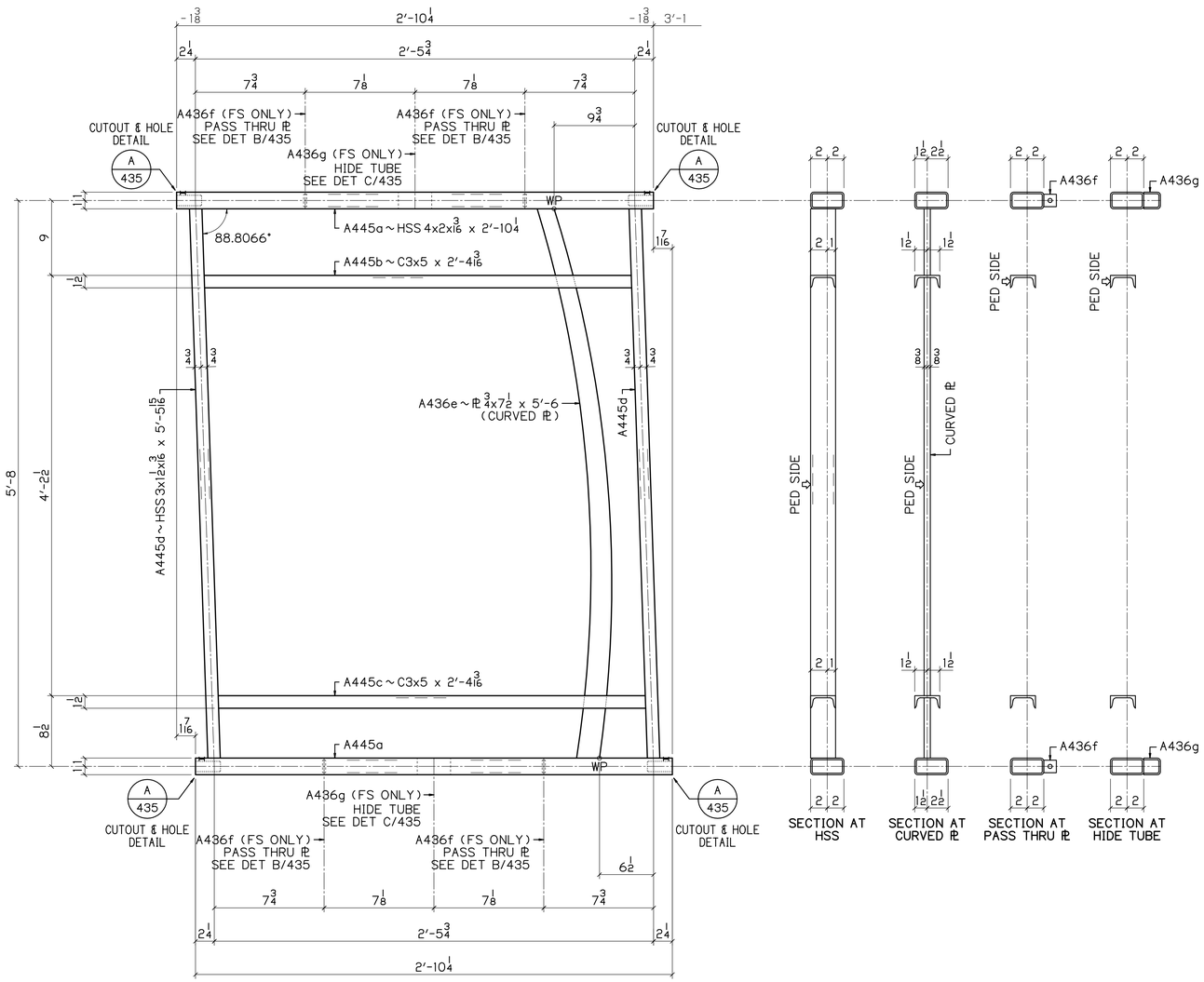

1 ~ A445
RAIL PANELS
PEDESTRIAN SIDE SHOWN

1/4 | 1.1934" / 12

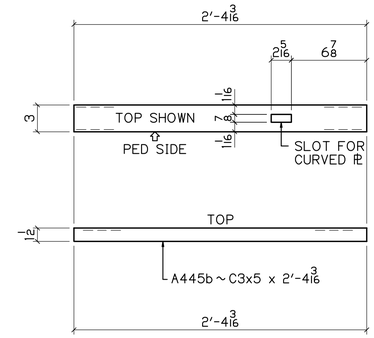

DETAIL OF A445b

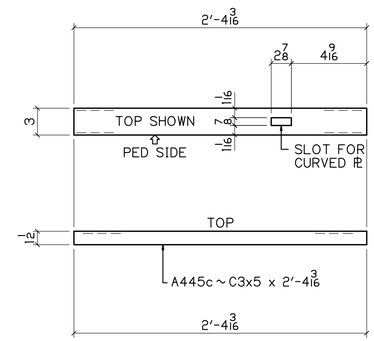

DETAIL OF A445c

BILL OF MATERIAL

NO	MK	NO	SUBMK	MATERIAL	FT	IN	REMARKS	SORT
1	A445			RAIL PANELS				MM
		2	A445a	HSS 4x2x3/16	2	10 1/4	SC2E	TS
		1	A445b	C3x5	2	4 3/16	SC2E	C
		1	A445c	C3x5	2	4 3/16	SC2E	C
		2	A445d	HSS 3x1 1/2x3/16	5	5 15/16	SC2E	TS
		1	A436e	PL 3/4x7 1/2	5	6	CURVED PL	PL
		4	A436f	PL 3/8x1 1/2	0	1 1/2	PASS THRU PL	PL
		2	A436g	HSS 4x2x3/16	0	8	SPLIT IN HALF	TS

BU-19 BLUE-GREEN LINES
100% COMPLETE 08-16-21

P.H. DREW INC.
2450 N. RACEWAY RD. - P.O. BOX 34295
INDIANAPOLIS, INDIANA 46234
PHONE : (317) 297-5152
FAX : (317) 297-5313

APPROVAL
APPROVED 08-03-21

CUY-IR490 / SR010-2.09 / 19.28

DECORATIVE FENCE

RAIL PANELS

REVISION

REV	DATE	DESCRIPTION	BY

STATE	OHIO
COUNTY	CUYAHOGA (CITY OF CLEVELAND)
PROJECT	3000 (17)
CONTRACT	PID 96833
SECTION	
STRUCTURE	
STATE JOB	

APPROVAL RECORD

DATE	ISSUED	APP DATE	APPROVAL STATUS
08-16-21	FABRICATION		

CUSTOMER	LAKE ERIE CONSTRUCTION COMPANY
CONTRACTOR	
ARCH/ENG	
REFERENCE	
ITEM	
FINISH	SEE NOTES - SHT E400

DRAWN BY	CHECKED BY	MRH NO	JOB MGR	DWG STATUS	JOB NO.	TOTAL SHEETS	SHEET
MRH 07-21-21	SRF 08-12-21	1914	JL	FABRICATION 08-16-21	19-1108		445

DN

SEE SHT 435 FOR DETAILS

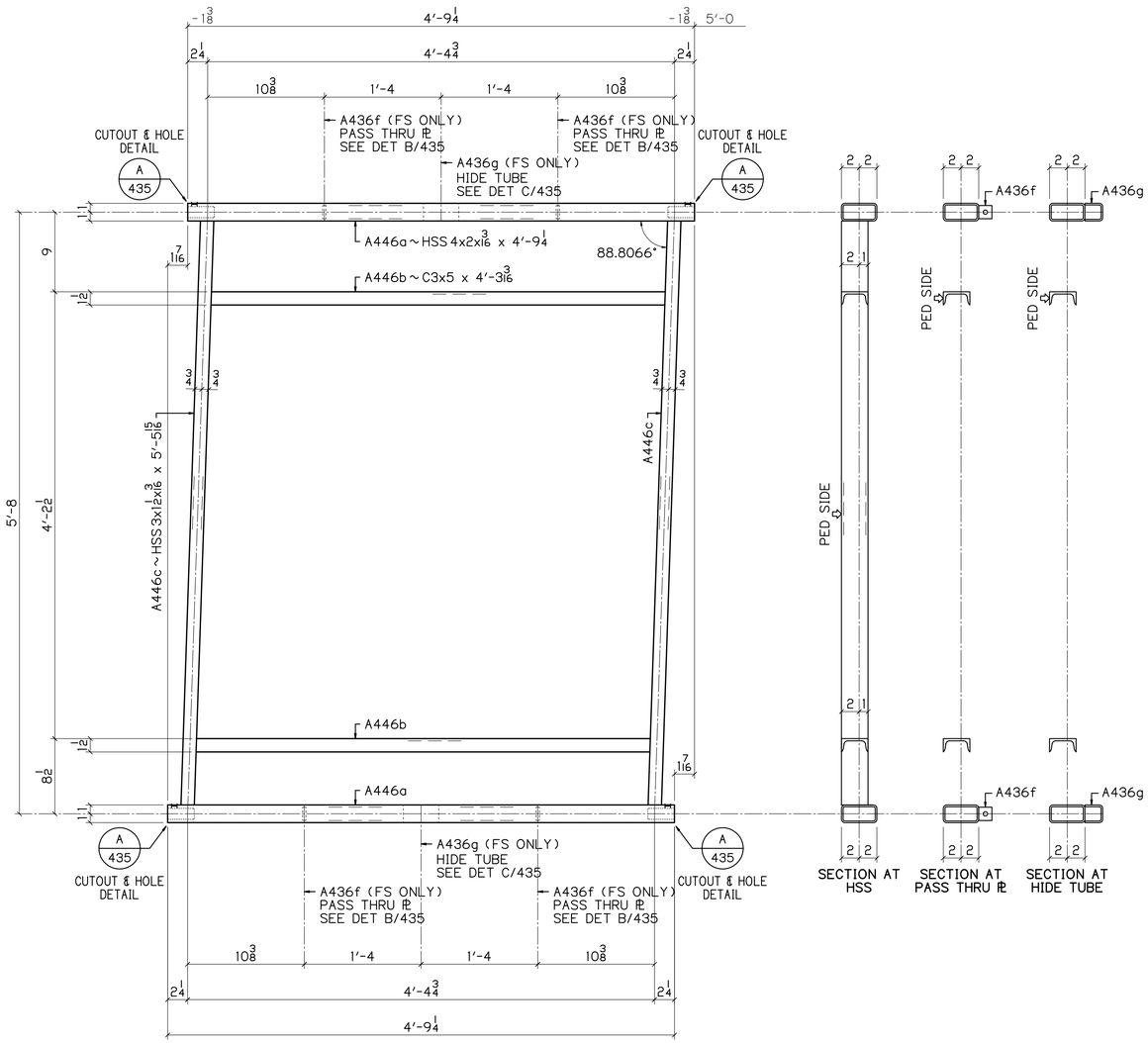

54 ~ A446

RAIL PANELS
PEDESTRIAN SIDE SHOWN

1.1934 1/4 / 12

UP

BILL OF MATERIAL

NO	MK	NO	SUBMK	MATERIAL	FT	IN	REMARKS	SORT
54	A446			RAIL PANELS				MM
		108	A446a	HSS 4x2x3/16	4	9 1/4	SC2E	TS
		108	A446b	C3x5	4	3 3/16	SC2E	C
		108	A446c	HSS 3x1 1/2x3/16	5	5 15/16	SC2E	TS
		216	A436f	PL 3/8x1 1/2	0	1 1/2	PASS THRU PL	PL
		108	A436g	HSS 4x2x3/16	0	8	SPLIT IN HALF	TS

BU-19 BLUE-GREEN LINES
100% COMPLETE 08-13-21

P.H. DREW INC.
2450 N. RACEWAY RD. - P.O. BOX 34295
INDIANAPOLIS, INDIANA 46234
PHONE : (317) 297-5152
FAX : (317) 297-5313

APPROVAL: APPROVED 08-03-21

CUY-IR490 / SR010-2.09 / 19.28

DECORATIVE FENCE

RAIL PANELS

REVISION	REV	DATE	DESCRIPTION	BY

APPROVAL RECORD	DATE	ISSUED	APP DATE	APPROVAL STATUS
	08-16-21	FABRICATION		

STATE	OHIO
COUNTY	CUYAHOGA (CITY OF CLEVELAND)
PROJECT	3000 (17)
CONTRACT	PID 96833
SECTION	
STRUCTURE	
STATE JOB	
CUSTOMER	LAKE ERIE CONSTRUCTION COMPANY
CONTRACTOR	
ARCH/ENG	
REFERENCE	
ITEM	
FINISH	SEE NOTES-SHT E400

DRAWN BY	CHECKED BY	MRH NO	JOB MGR	DWG STATUS	JOB NO.	TOTAL SHEETS	SHEET
MRH 07-21-21	SRF 08-12-21	1914	JL	FABRICATION 08-16-21	19-1108		446

SEE SHT 435 FOR DETAILS

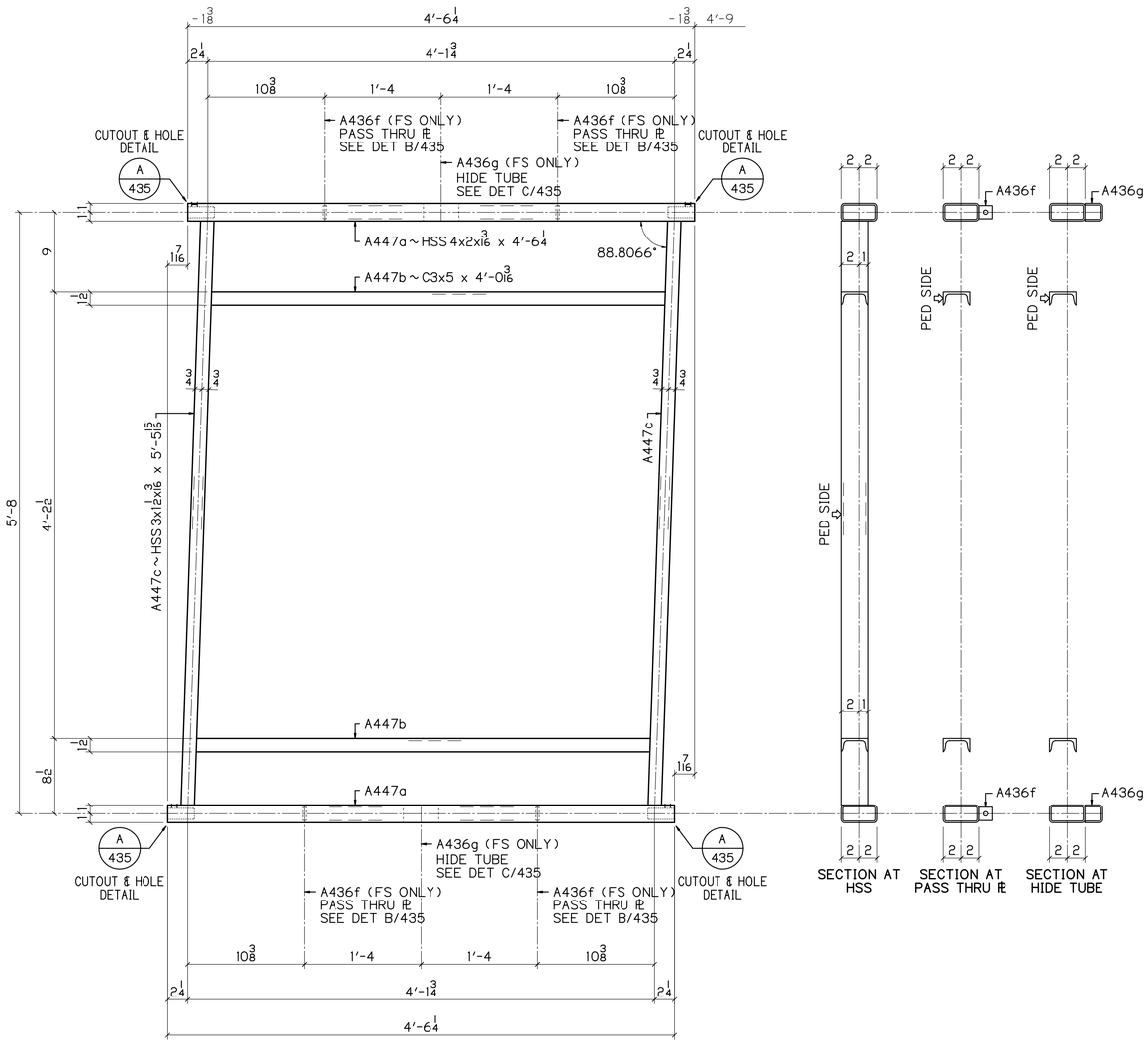

6 ~ A447

RAIL PANELS
PEDESTRIAN SIDE SHOWN

1.1934 1/4 / 12

UP

BILL OF MATERIAL

NO	MK	NO	SUBMK	MATERIAL	FT	IN	REMARKS	SORT
6	A447			RAIL PANELS				MM
		12	A447a	HSS 4x2x3/16	4	6 1/4	SC2E	TS
		12	A447b	C3x5	4	0 3/16	SC2E	C
		12	A447c	HSS 3x1 1/2x3/16	5	5 15/16	SC2E	TS
		24	A436f	PL 3/8x1 1/2	0	1 1/2	PASS THRU PL	PL
		12	A436g	HSS 4x2x3/16	0	8	SPLIT IN HALF	TS

BU-19 BLUE-GREEN LINES
100% COMPLETE 08-16-21

P.H. DREW INC.
2450 N. RACEWAY RD. - P.O. BOX 34295
INDIANAPOLIS, INDIANA 46234
PHONE : (317) 297-5152
FAX : (317) 297-5313

APPROVAL: APPROVED 08-03-21

CUY-IR490 / SR010-2.09 / 19.28

DECORATIVE FENCE

RAIL PANELS

REVISION	REV	DATE	DESCRIPTION	BY

APPROVAL RECORD	DATE	ISSUED	APP DATE	APPROVAL STATUS
	08-16-21	FABRICATION		

STATE	OHIO
COUNTY	CUYAHOGA (CITY OF CLEVELAND)
PROJECT	3000 (17)
CONTRACT	PID 96833
SECTION	
STRUCTURE	
STATE JOB	
CUSTOMER	LAKE ERIE CONSTRUCTION COMPANY
CONTRACTOR	
ARCH/ENG	
REFERENCE	
ITEM	
FINISH	SEE NOTES-SHT E400

DRAWN BY	CHECKED BY	MRH NO	JOB MGR	DWG STATUS	JOB NO.	TOTAL SHEETS	SHEET
MRH 07-21-21	SRF 08-12-21	1914	JL	FABRICATION 08-16-21	19-1108		447

SEE SHT 435 FOR DETAILS

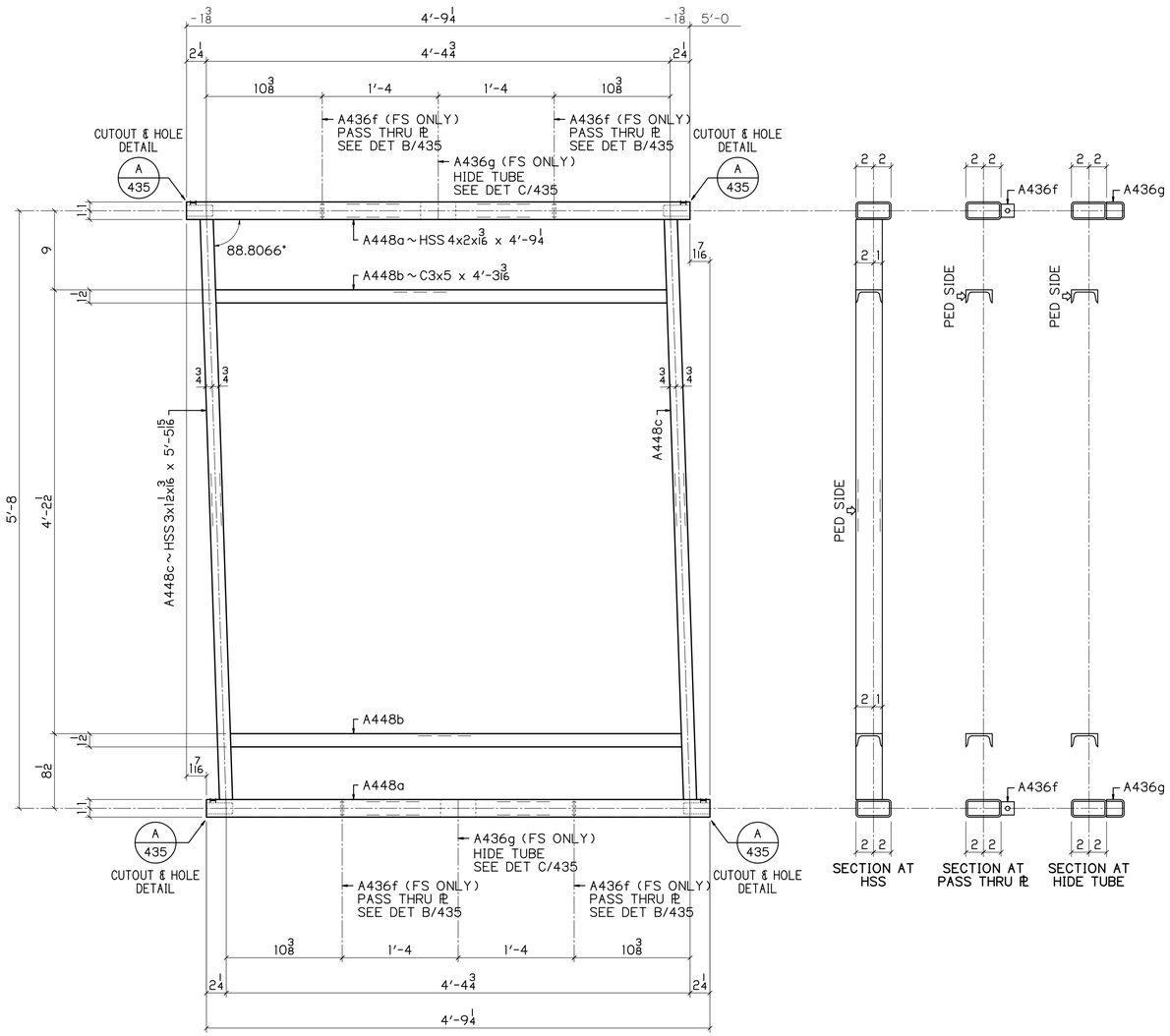

34 ~ A448

RAIL PANELS
PEDESTRIAN SIDE SHOWN

1/4 | 1.1934" / 12

DN

BILL OF MATERIAL

NO	MK	NO	SUBMK	MATERIAL	FT	IN	REMARKS	SORT
34	A448			RAIL PANELS				MM
		68	A448a	HSS 4x2x3/16	4	9 1/4	SC2E	TS
		68	A448b	C3x5	4	3 3/16	SC2E	C
		68	A448c	HSS 3x1 1/2x3/16	5	5 15/16	SC2E	TS
		136	A436f	PL 3/8x1 1/2	0	1 1/2	PASS THRU PL	PL
		68	A436g	HSS 4x2x3/16	0	8	SPLIT IN HALF	TS

BU-19 BLUE-GREEN LINES
100% COMPLETE 08-13-21

P.H. DREW INC.
2450 N. RACEWAY RD. - P.O. BOX 34295
INDIANAPOLIS, INDIANA 46234
PHONE : (317) 297-5152
FAX : (317) 297-5313

APPROVAL: APPROVED 08-03-21

CUY-IR490 / SR010-2.09 / 19.28

DECORATIVE FENCE

RAIL PANELS

REVISION

REV	DATE	DESCRIPTION	BY

APPROVAL RECORD

DATE	ISSUED	APP DATE	APPROVAL STATUS
08-16-21	FABRICATION		

STATE	OHIO
COUNTY	CUYAHOGA (CITY OF CLEVELAND)
PROJECT	3000 (17)
CONTRACT	PID 96833
SECTION	
STRUCTURE	
STATE JOB	
CUSTOMER	LAKE ERIE CONSTRUCTION COMPANY
CONTRACTOR	
ARCH/ENG	
REFERENCE	
ITEM	
FINISH	SEE NOTES-SHT E400

DRAWN BY	CHECKED BY	MRH NO	JOB MGR	DWG STATUS	JOB NO.	TOTAL SHEETS	SHEET
MRH 07-21-21	SRF 08-12-21	1914	JL	FABRICATION 08-16-21	19-1108		448

SEE SHT 435 FOR DETAILS

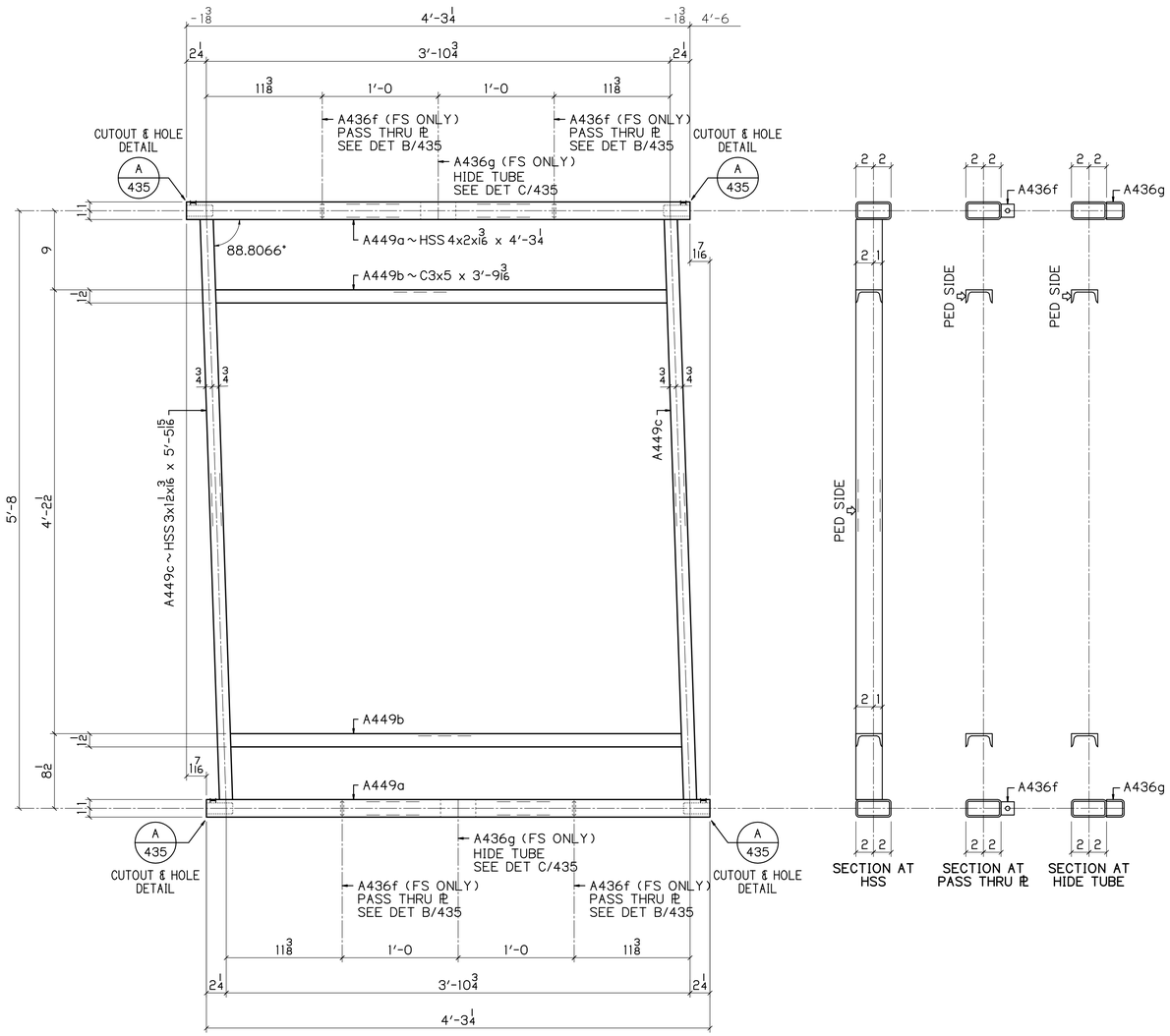

7 ~ A449

RAIL PANELS
PEDESTRIAN SIDE SHOWN

1/4 | 1.1934* / 12

DN

BILL OF MATERIAL

NO	MK	NO	SUBMK	MATERIAL	FT	IN	REMARKS	SORT
7	A449			RAIL PANELS				MM
		14	A449a	HSS 4x2x3/16	4	3 1/4	SC2E	TS
		14	A449b	C3x5	3	9 3/16	SC2E	C
		14	A449c	HSS 3x1 1/2x3/16	5	5 15/16	SC2E	TS
		28	A436f	PL 3/8x1 1/2	0	1 1/2	PASS THRU PL	PL
		14	A436g	HSS 4x2x3/16	0	8	SPLIT IN HALF	TS

BU-19 BLUE-GREEN LINES
100% COMPLETE 08-16-21

P.H. DREW INC.
2450 N. RACEWAY RD. - P.O. BOX 34295
INDIANAPOLIS, INDIANA 46234
PHONE : (317) 297-5152
FAX : (317) 297-5313

APPROVAL: APPROVED 08-03-21

CUY-IR490 / SR010-2.09 / 19.28

DECORATIVE FENCE

RAIL PANELS

REVISION

REV	DATE	DESCRIPTION	BY

APPROVAL RECORD

DATE	ISSUED	APP DATE	APPROVAL STATUS
08-16-21	FABRICATION		

STATE	OHIO
COUNTY	CUYAHOGA (CITY OF CLEVELAND)
PROJECT	3000 (17)
CONTRACT	PID 96833
SECTION	
STRUCTURE	
STATE JOB	
CUSTOMER	LAKE ERIE CONSTRUCTION COMPANY
CONTRACTOR	
ARCH/ENG	
REFERENCE	
ITEM	
FINISH	SEE NOTES-SHT E400

DRAWN BY	CHECKED BY	MRH NO	JOB MGR	DWG STATUS	JOB NO.	TOTAL SHEETS	SHEET
MRH 07-21-21	SRF 08-12-21	1914	JL	FABRICATION 08-16-21	19-1108		449

SEE SHT 435 FOR DETAILS

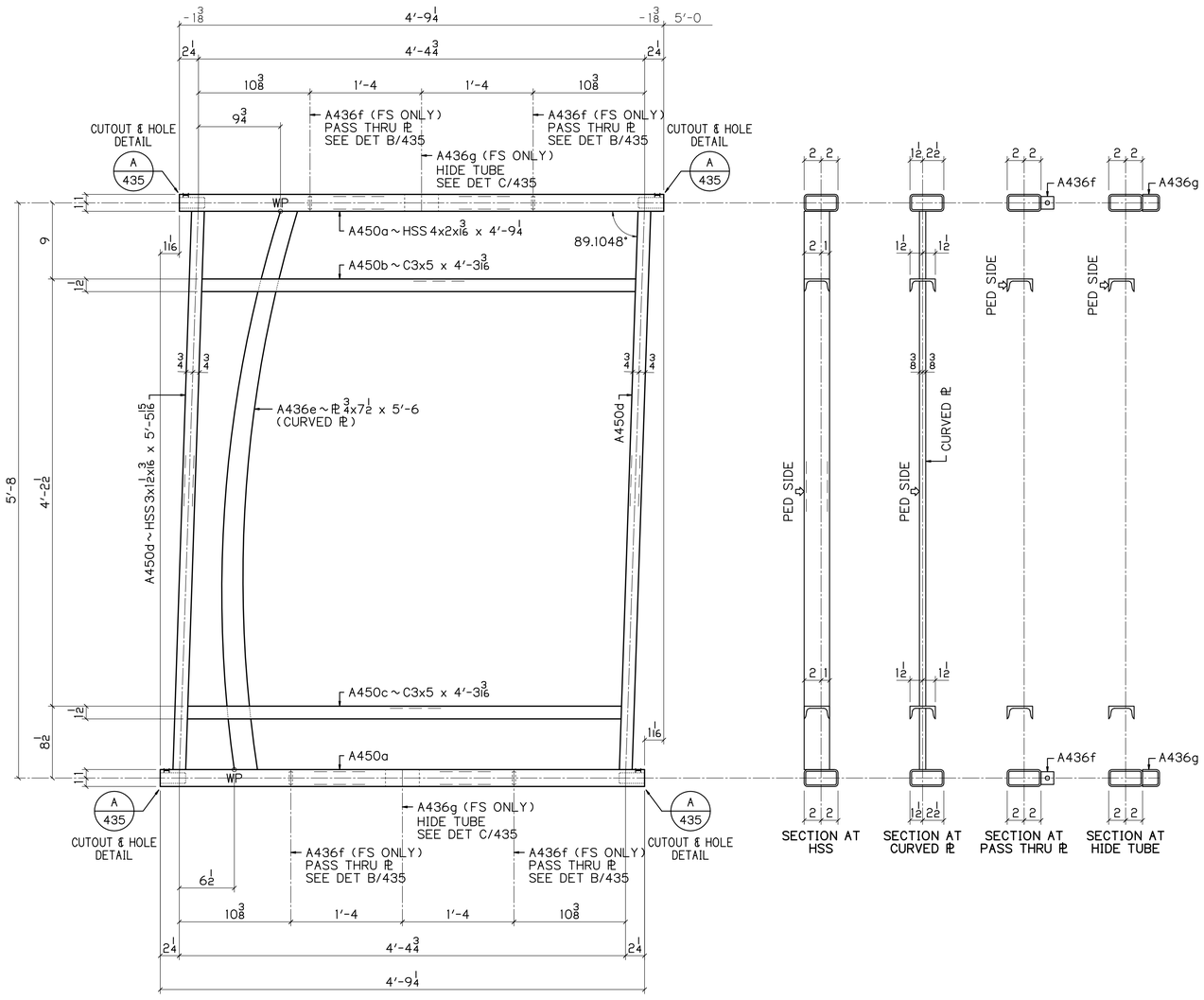

2 ~ A450

RAIL PANELS

PEDESTRIAN SIDE SHOWN

$\frac{0.8952}{12}$ 1 3/16

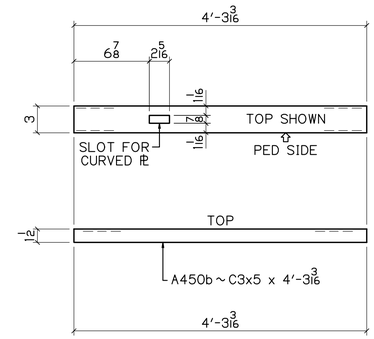

DETAIL OF A450b

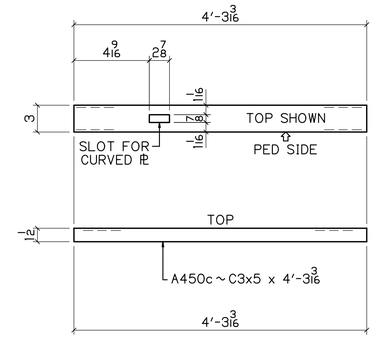

DETAIL OF A450c

UP

BILL OF MATERIAL

NO	MK	NO	SUBMK	MATERIAL	FT	IN	REMARKS	SORT
2	A450			RAIL PANELS				MM
		4	A450a	HSS 4x2x3/16	4	9 1/4	SC2E	TS
		2	A450b	C3x5	4	3 3/16	SC2E	C
		2	A450c	C3x5	4	3 3/16	SC2E	C
		4	A450d	HSS 3x1 1/2x3/16	5	5 15/16	SC2E	TS
		2	A436e	PL 3/4x7 1/2	5	6	CURVED PL	PL
		8	A436f	PL 3/8x1 1/2	0	1 1/2	PASS THRU PL	PL
		4	A436g	HSS 4x2x3/16	0	8	SPLIT IN HALF	TS

BU-19 BLUE-GREEN LINES

100% COMPLETE 08-16-21

P.H. DREW INC.
2450 N. RACEWAY RD. - P.O. BOX 34295
INDIANAPOLIS, INDIANA 46234
PHONE : (317) 297-5152
FAX : (317) 297-5313

APPROVAL: APPROVED 08-03-21

CUY-IR490 / SR010-2.09 / 19.28

DECORATIVE FENCE

RAIL PANELS

REVISION	REV	DATE	DESCRIPTION	BY

APPROVAL RECORD	DATE	ISSUED	APP DATE	APPROVAL STATUS
	08-16-21	FABRICATION		

STATE	OHIO
COUNTY	CUYAHOGA (CITY OF CLEVELAND)
PROJECT	3000 (17)
CONTRACT	PID 96833
SECTION	
STRUCTURE	
STATE JOB	
CUSTOMER	LAKE ERIE CONSTRUCTION COMPANY
CONTRACTOR	
ARCH/ENG	
REFERENCE	
ITEM	
FINISH	SEE NOTES - SHT E400

DRAWN BY	CHECKED BY	MRH NO	JOB MGR	DWG STATUS	JOB NO.	TOTAL SHEETS	SHEET
MRH 07-21-21	SRF 08-12-21	1914	JL	FABRICATION 08-16-21	19-1108		450

SEE SHT 435 FOR DETAILS

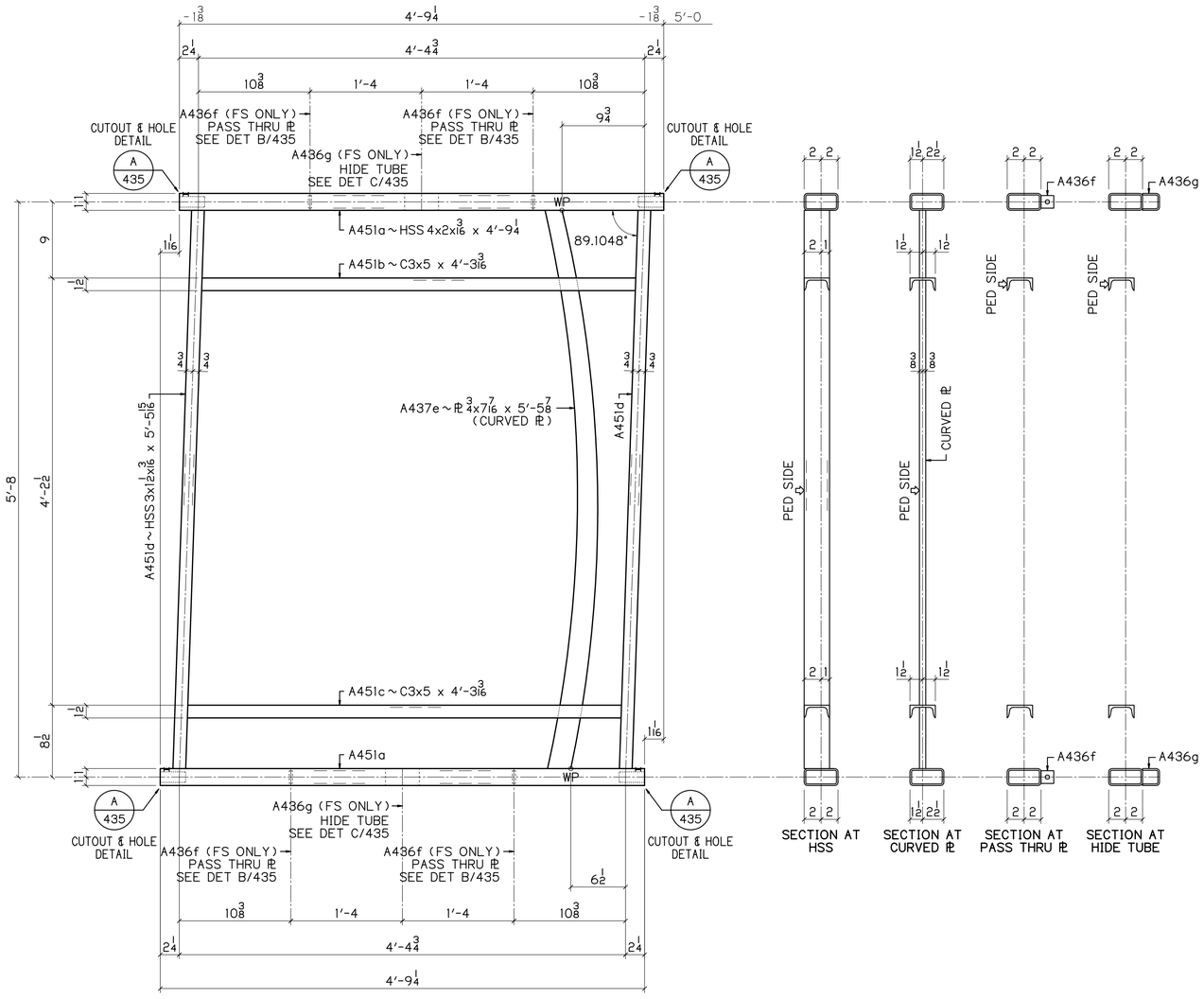

2 ~ A451

RAIL PANELS

PEDESTRIAN SIDE SHOWN

0.8952 1 3/16 / 12

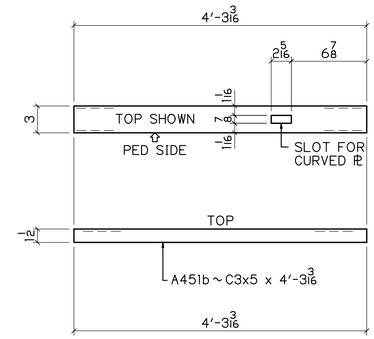

DETAIL OF A451b

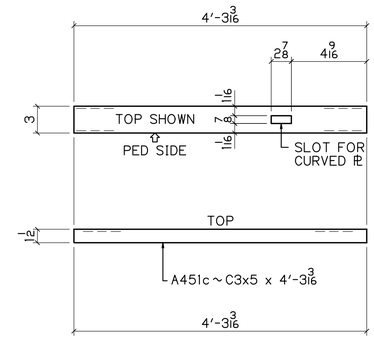

DETAIL OF A451c

UP

BILL OF MATERIAL

NO	MK	NO	SUBMK	MATERIAL	FT	IN	REMARKS	SORT
2	A451			RAIL PANELS				MM
		4	A451a	HSS 4x2x1/16	4	9 1/4	SC2E	TS
		2	A451b	C3x5	4	3 3/16	SC2E	C
		2	A451c	C3x5	4	3 3/16	SC2E	C
		4	A451d	HSS 3x1 1/2x5/16	5	5 15/16	SC2E	TS
		2	A437e	PL 3/4x7/16	5	5 7/8	CURVED PL	PL
		8	A436f	PL 3/8x1 1/2	0	1 1/2	PASS THRU PL	PL
		4	A436g	HSS 4x2x1/16	0	8	SPLIT IN HALF	TS

BU-19 BLUE-GREEN LINES

100% COMPLETE 08-16-21

P.H. DREW INC.
2450 N. RACEWAY RD. - P.O. BOX 34295
INDIANAPOLIS, INDIANA 46234
PHONE : (317) 297-5152
FAX : (317) 297-5313

APPROVAL: APPROVED 08-03-21

CUY-IR490 / SR010-2.09 / 19.28

DECORATIVE FENCE

RAIL PANELS

REVISION	REV	DATE	DESCRIPTION	BY

APPROVAL RECORD	DATE	ISSUED	APP DATE	APPROVAL STATUS
	08-16-21	FABRICATION		

STATE	OHIO
COUNTY	CUYAHOGA (CITY OF CLEVELAND)
PROJECT	3000 (17)
CONTRACT	PID 96833
SECTION	
STRUCTURE	
STATE JOB	
CUSTOMER	LAKE ERIE CONSTRUCTION COMPANY
CONTRACTOR	
ARCH/ENG	
REFERENCE	
ITEM	
FINISH	SEE NOTES - SHT E400

DRAWN BY	CHECKED BY	MRH NO	JOB MGR	DWG STATUS	JOB NO.	TOTAL SHEETS	SHEET
MRH 07-21-21	SRF 08-12-21	1914	JL	FABRICATION 08-16-21	19-1108		451

SEE SHT 435 FOR DETAILS

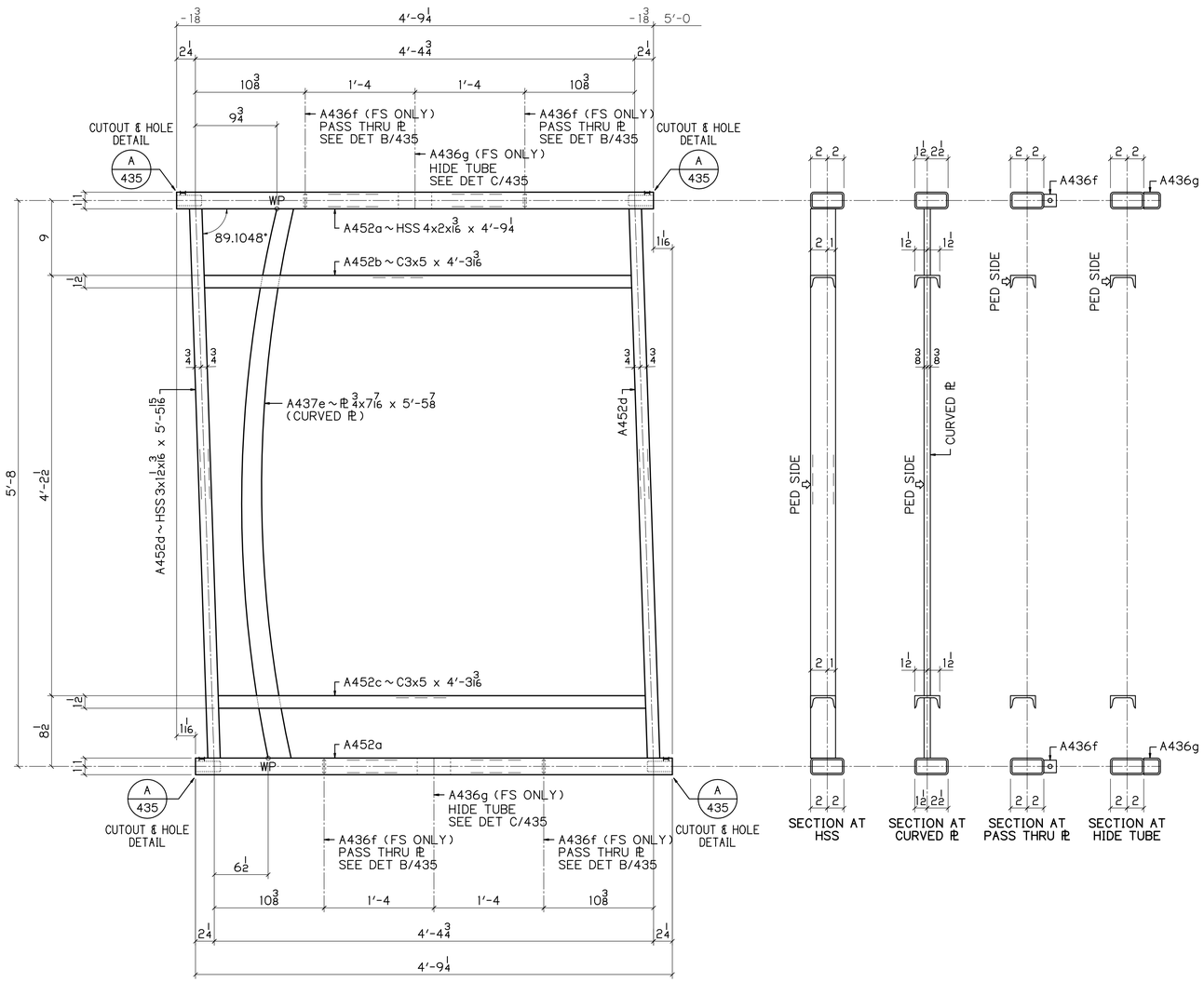

2 ~ A452

RAIL PANELS
PEDESTRIAN SIDE SHOWN

3/16 | 0.8952°
12

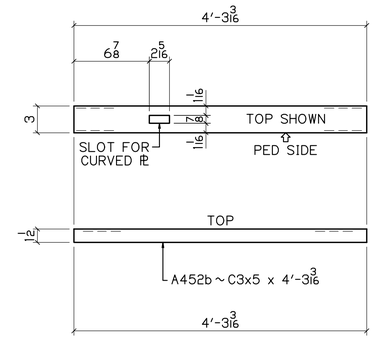

DETAIL OF A452b

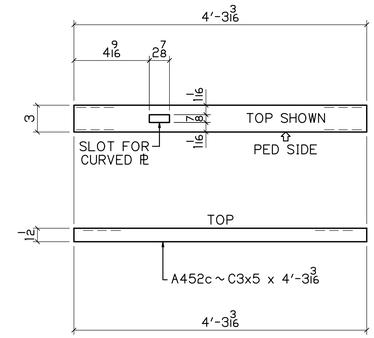

DETAIL OF A452c

BILL OF MATERIAL

NO	MK	NO	SUBMK	MATERIAL	FT	IN	REMARKS	SORT
2	A452			RAIL PANELS				MM
		4	A452a	HSS 4x2x3/16	4	9 1/4	SC2E	TS
		2	A452b	C3x5	4	3 3/16	SC2E	C
		2	A452c	C3x5	4	3 3/16	SC2E	C
		4	A452d	HSS 3x1 1/2x3/16	5	5 15/16	SC2E	TS
		2	A437e	PL 3/4x7/16	5	5 7/8	CURVED PL	PL
		8	A436f	PL 3/8x1 1/2	0	1 1/2	PASS THRU PL	PL
		4	A436g	HSS 4x2x3/16	0	8	SPLIT IN HALF	TS

BU-19 BLUE-GREEN LINES
100% COMPLETE 08-16-21

P.H. DREW INC.
2450 N. RACEWAY RD. - P.O. BOX 34295
INDIANAPOLIS, INDIANA 46234
PHONE : (317) 297-5152
FAX : (317) 297-5313

APPROVAL
APPROVED 08-03-21

CUY-IR490 / SR010-2.09 / 19.28

DECORATIVE FENCE

RAIL PANELS

REVISION

REV	DATE	DESCRIPTION	BY

STATE	OHIO
COUNTY	CUYAHOGA (CITY OF CLEVELAND)
PROJECT	3000 (17)
CONTRACT	PID 96833
SECTION	
STRUCTURE	
STATE JOB	

APPROVAL RECORD

DATE	ISSUED	APP DATE	APPROVAL STATUS
08-16-21	FABRICATION		

CUSTOMER	LAKE ERIE CONSTRUCTION COMPANY
CONTRACTOR	
ARCH/ENG	
REFERENCE	
ITEM	
FINISH	SEE NOTES - SHT E400

DRAWN BY	CHECKED BY	MRH NO	JOB MGR	DWG STATUS	JOB NO.	TOTAL SHEETS	SHEET
MRH 07-21-21	SRF 08-12-21	1914	JL	FABRICATION 08-16-21	19-1108		452

DN

SEE SHT 435 FOR DETAILS

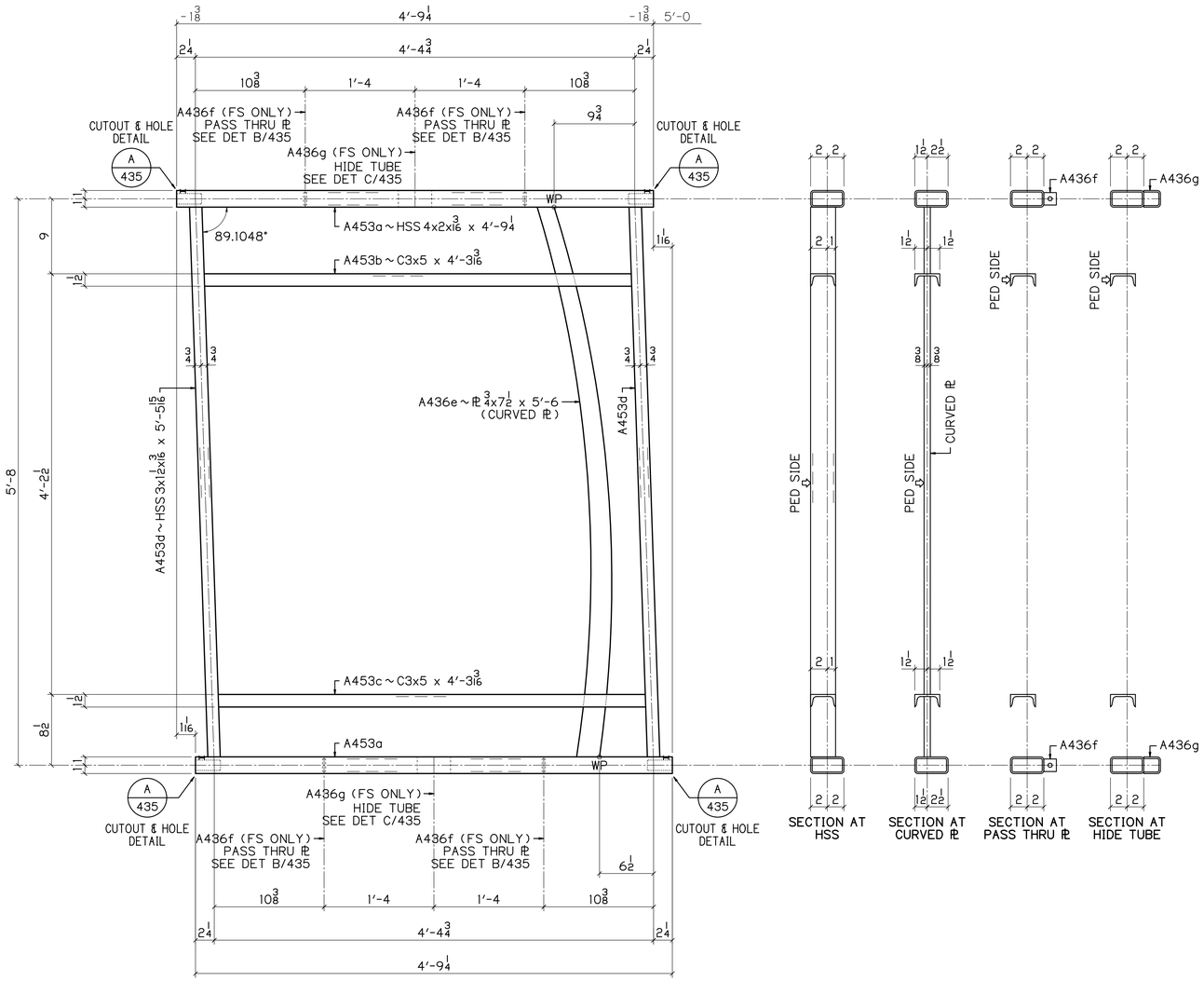

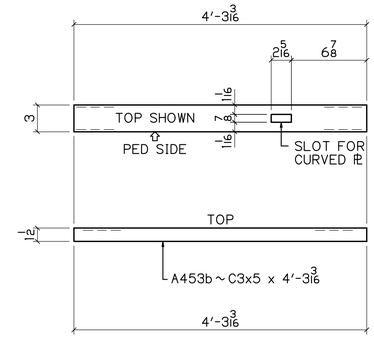

DETAIL OF A453b

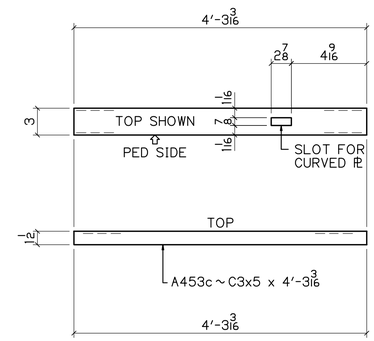

DETAIL OF A453c

BILL OF MATERIAL

NO	MK	NO	SUBMK	MATERIAL	FT	IN	REMARKS	SORT
2	A453			RAIL PANELS				MM
		4	A453a	HSS 4x2x3/16	4	9 1/4	SC2E	TS
		2	A453b	C3x5	4	3 3/16	SC2E	C
		2	A453c	C3x5	4	3 3/16	SC2E	C
		4	A453d	HSS 3x1 1/2x3/16	5	5 15/16	SC2E	TS
		2	A436e	PL 3/4x7 1/2	5	6	CURVED PL	PL
		8	A436f	PL 3/8x1 1/2	0	1 1/2	PASS THRU PL	PL
		2	A436g	HSS 4x2x3/16	0	8	SPLIT IN HALF	TS

BU-19 BLUE-GREEN LINES

100% COMPLETE 08-16-21

P.H. DREW INC.
2450 N. RACEWAY RD. - P.O. BOX 34295
INDIANAPOLIS, INDIANA 46234
PHONE : (317) 297-5152
FAX : (317) 297-5313

APPROVAL: APPROVED 08-03-21

CUY-IR490 / SR010-2.09 / 19.28

DECORATIVE FENCE

RAIL PANELS

REVISION

REV	DATE	DESCRIPTION	BY

APPROVAL RECORD

DATE	ISSUED	APP DATE	APPROVAL STATUS
08-16-21	FABRICATION		

STATE	OHIO
COUNTY	CUYAHOGA (CITY OF CLEVELAND)
PROJECT	3000 (17)
CONTRACT	PID 96833
SECTION	
STRUCTURE	
STATE JOB	
CUSTOMER	LAKE ERIE CONSTRUCTION COMPANY
CONTRACTOR	
ARCH/ENG	
REFERENCE	
ITEM	
FINISH	SEE NOTES - SHT E400

DRAWN BY	CHECKED BY	MRH NO	JOB MGR	DWG STATUS	JOB NO.	TOTAL SHEETS	SHEET
MRH 07-21-21	SRF 08-12-21	1914	JL	FABRICATION 08-16-21	19-1108		453

DN

SEE SHT 435 FOR DETAILS

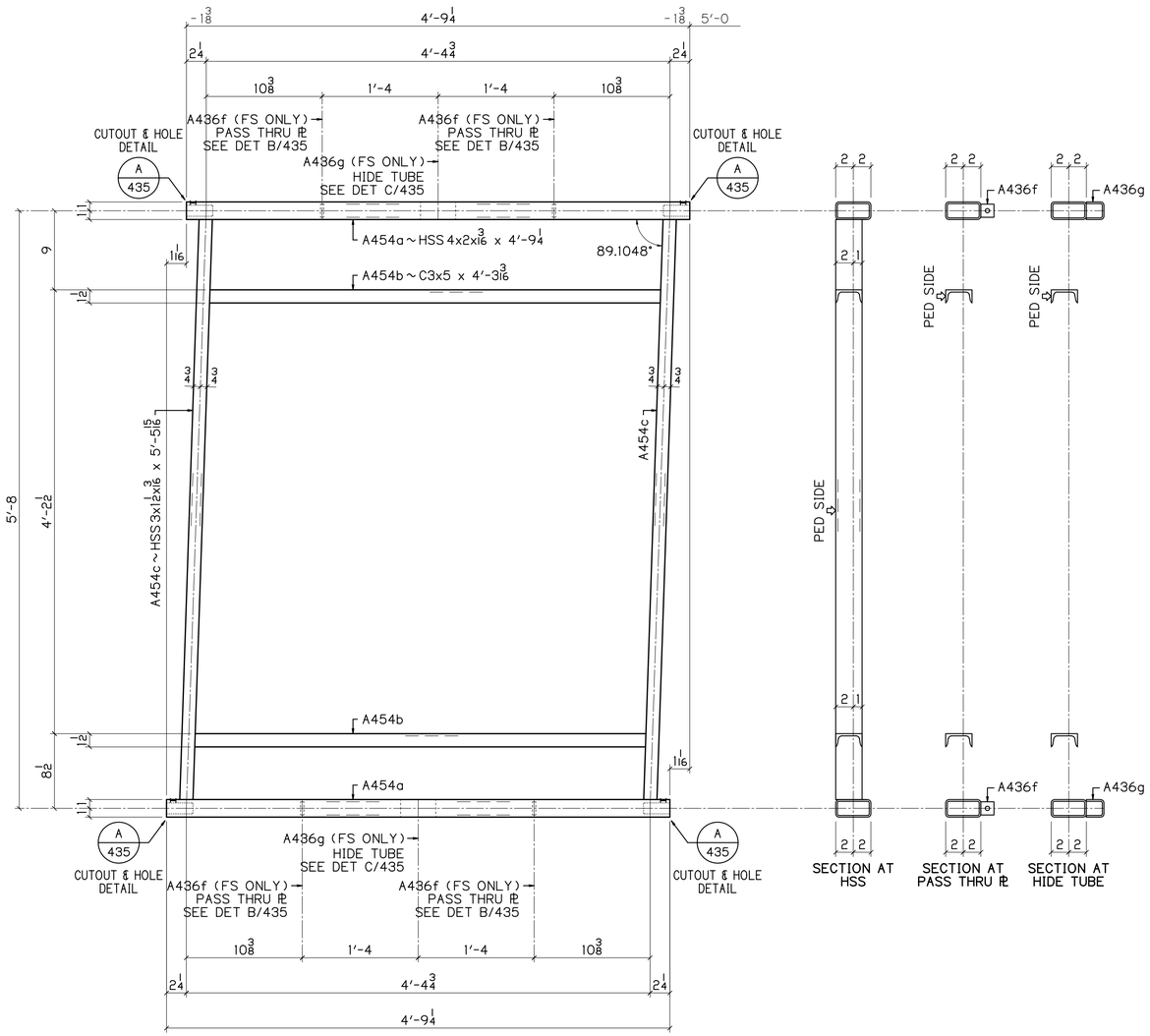

10 ~ A454

RAIL PANELS
PEDESTRIAN SIDE SHOWN

0.8952 1 3/16 / 12

UP

BILL OF MATERIAL

NO	MK	NO	SUBMK	MATERIAL	FT	IN	REMARKS	SORT
10	A454			RAIL PANELS				MM
		20	A454a	HSS 4x2x3/16	4	9 1/4	SC2E	TS
		20	A454b	C3x5	4	3 3/16	SC2E	C
		20	A454c	HSS 3x1 1/2x3/16	5	5 15/16	SC2E	TS
		40	A436f	PL 3/8x1 1/2	0	1 1/2	PASS THRU PL	PL
		20	A436g	HSS 4x2x3/16	0	8	SPLIT IN HALF	TS

BU-19 BLUE-GREEN LINES
100% COMPLETE 08-16-21

P.H. DREW INC.
2450 N. RACEWAY RD. - P.O. BOX 34295
INDIANAPOLIS, INDIANA 46234
PHONE : (317) 297-5152
FAX : (317) 297-5313

APPROVAL: APPROVED 08-03-21

CUY-IR490 / SR010-2.09 / 19.28

DECORATIVE FENCE

RAIL PANELS

REVISION	REV	DATE	DESCRIPTION	BY

STATE	OHIO
COUNTY	CUYAHOGA (CITY OF CLEVELAND)
PROJECT	3000 (17)
CONTRACT	PID 96833
SECTION	
STRUCTURE	
STATE JOB	

APPROVAL RECORD	DATE	ISSUED	APP DATE	APPROVAL STATUS
	08-16-21	FABRICATION		

CUSTOMER	LAKE ERIE CONSTRUCTION COMPANY
CONTRACTOR	
ARCH/ENG	
REFERENCE	
ITEM	
FINISH	SEE NOTES-SHT E400

DRAWN BY	CHECKED BY	MRH NO	JOB MGR	DWG STATUS	JOB NO.	TOTAL SHEETS	SHEET
MRH 07-21-21	SRF 08-12-21	1914	JL	FABRICATION 08-16-21	19-1108		454

SEE SHT 435 FOR DETAILS

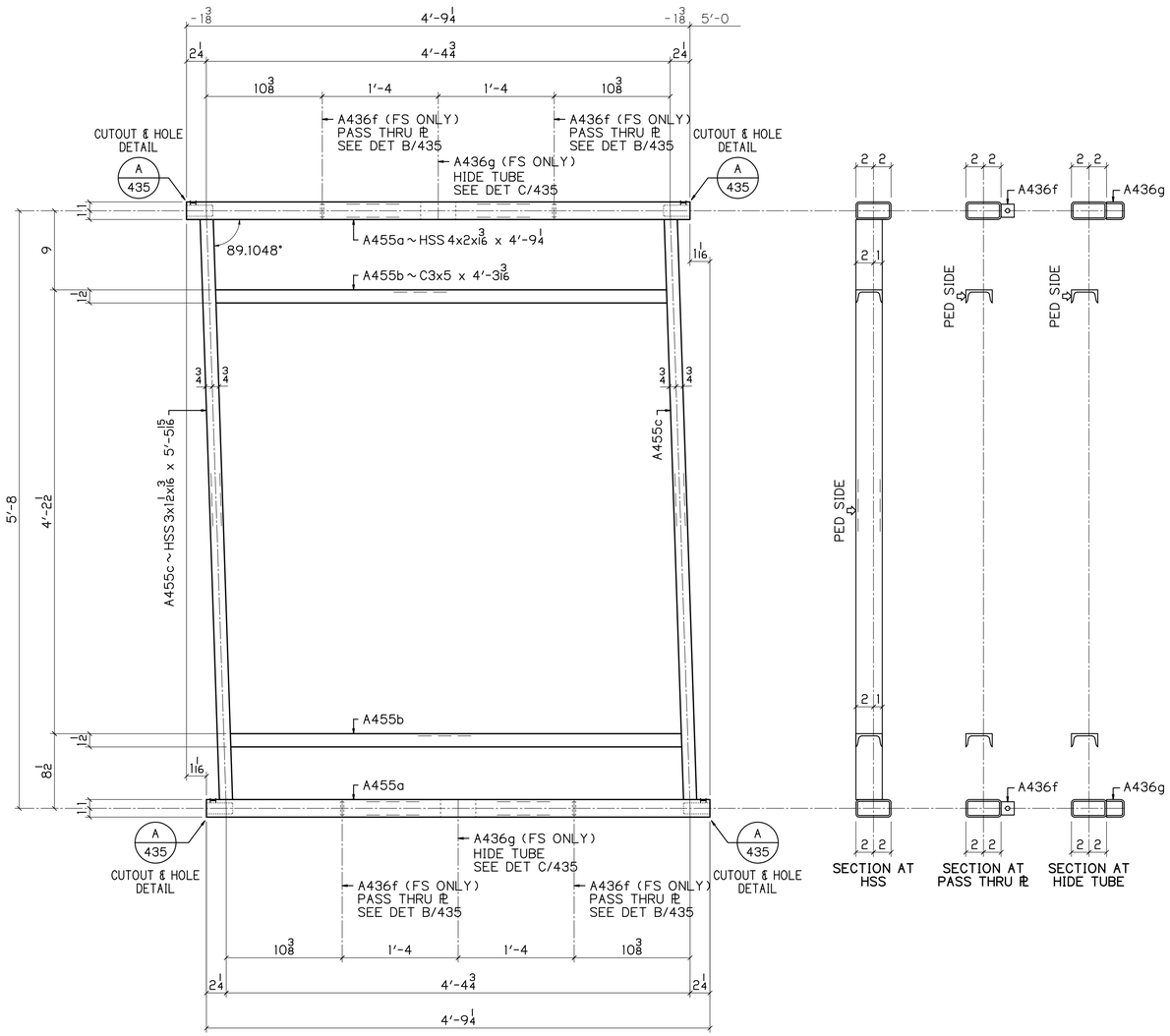

10 ~ A455

RAIL PANELS
PEDESTRIAN SIDE SHOWN

3/16 | 0.8952° / 12

BILL OF MATERIAL

NO	MK	NO	SUBMK	MATERIAL	FT	IN	REMARKS	SORT
10	A455			RAIL PANELS				MM
		20	A455a	HSS 4x2x3/16	4	9 1/4	SC2E	TS
		20	A455b	C3x5	4	3 3/16	SC2E	C
		20	A455c	HSS 3x1 1/2x3/16	5	5 15/16	SC2E	TS
		40	A436f	PL 3/8x1 1/2	0	1 1/2	PASS THRU PL	PL
		20	A436g	HSS 4x2x3/16	0	8	SPLIT IN HALF	TS

BU-19 BLUE-GREEN LINES
100% COMPLETE 08-16-21

P.H. DREW INC.
2450 N. RACEWAY RD. - P.O. BOX 34295
INDIANAPOLIS, INDIANA 46234
PHONE : (317) 297-5152
FAX : (317) 297-5313

APPROVAL: APPROVED 08-03-21

CUY-IR490 / SR010-2.09 / 19.28

DECORATIVE FENCE

RAIL PANELS

REVISION

REV	DATE	DESCRIPTION	BY

APPROVAL RECORD

DATE	ISSUED	APP DATE	APPROVAL STATUS
08-16-21	FABRICATION		

STATE	OHIO
COUNTY	CUYAHOGA (CITY OF CLEVELAND)
PROJECT	3000 (17)
CONTRACT	PID 96833
SECTION	
STRUCTURE	
STATE JOB	
CUSTOMER	LAKE ERIE CONSTRUCTION COMPANY
CONTRACTOR	
ARCH/ENG	
REFERENCE	
ITEM	
FINISH	SEE NOTES-SHT E400

DRAWN BY	CHECKED BY	MRH NO	JOB MGR	DWG STATUS	JOB NO.	TOTAL SHEETS	SHEET
MRH 07-21-21	SRF 08-12-21	1914	JL	FABRICATION 08-16-21	19-1108		455

DN

SEE SHT 435 FOR DETAILS

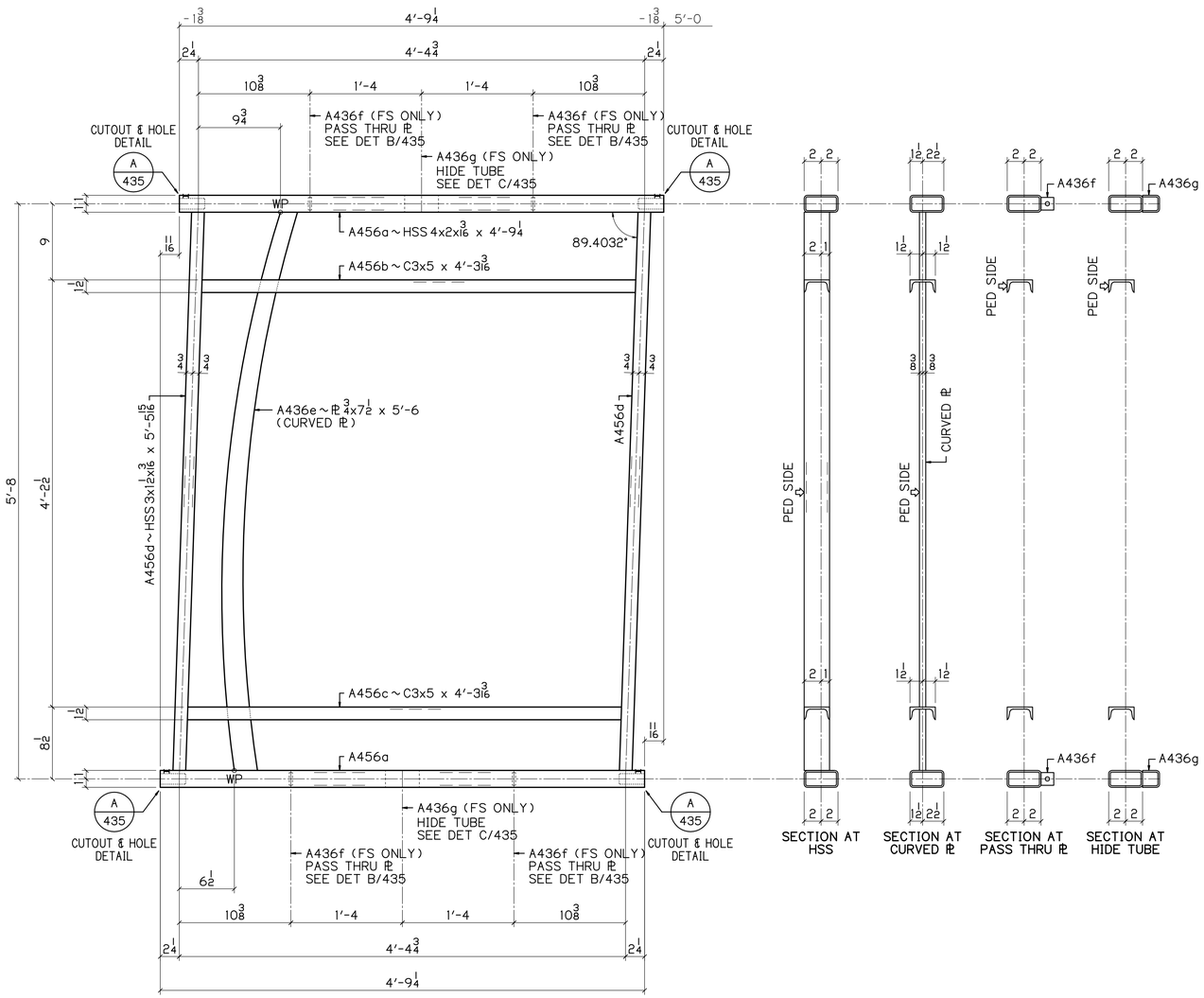

2 ~ A456

RAIL PANELS
PEDESTRIAN SIDE SHOWN

0.5968 1/8 / 12

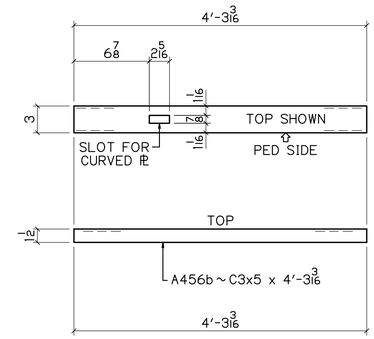

DETAIL OF A456b

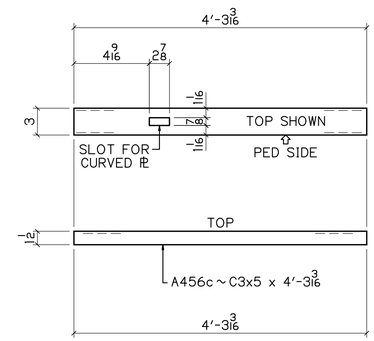

DETAIL OF A456c

UP

BILL OF MATERIAL

NO	MK	NO	SUBMK	MATERIAL	FT	IN	REMARKS	SORT
2	A456			RAIL PANELS				MM
		4	A456a	HSS 4x2x3/16	4	9 1/4	SC2E	TS
		2	A456b	C3x5	4	3 3/16	SC2E	C
		2	A456c	C3x5	4	3 3/16	SC2E	C
		4	A456d	HSS 3x1 1/2x3/16	5	5 15/16	SC2E	TS
		2	A436e	PL 3/4x7 1/2	5	6	CURVED PL	PL
		8	A436f	PL 3/8x1 1/2	0	1 1/2	PASS THRU PL	PL
		4	A436g	HSS 4x2x3/16	0	8	SPLIT IN HALF	TS

BU-19 BLUE-GREEN LINES
100% COMPLETE 08-16-21

P.H. DREW INC.
2450 N. RACEWAY RD. - P.O. BOX 34295
INDIANAPOLIS, INDIANA 46234
PHONE : (317) 297-5152
FAX : (317) 297-5313

APPROVAL: APPROVED 08-03-21

CUY-IR490 / SR010-2.09 / 19.28

DECORATIVE FENCE

RAIL PANELS

REVISION

REV	DATE	DESCRIPTION	BY

APPROVAL RECORD

DATE	ISSUED	APP DATE	APPROVAL STATUS
08-16-21	FABRICATION		

STATE	OHIO
COUNTY	CUYAHOGA (CITY OF CLEVELAND)
PROJECT	3000 (17)
CONTRACT	PID 96833
SECTION	
STRUCTURE	
STATE JOB	
CUSTOMER	LAKE ERIE CONSTRUCTION COMPANY
CONTRACTOR	
ARCH/ENG	
REFERENCE	
ITEM	
FINISH	SEE NOTES - SHT E400

DRAWN BY	CHECKED BY	MRH NO	JOB MGR	DWG STATUS	JOB NO.	TOTAL SHEETS	SHEET
MRH 07-21-21	SRF 08-12-21	1914	JL	FABRICATION 08-16-21	19-1108		456

SEE SHT 435 FOR DETAILS

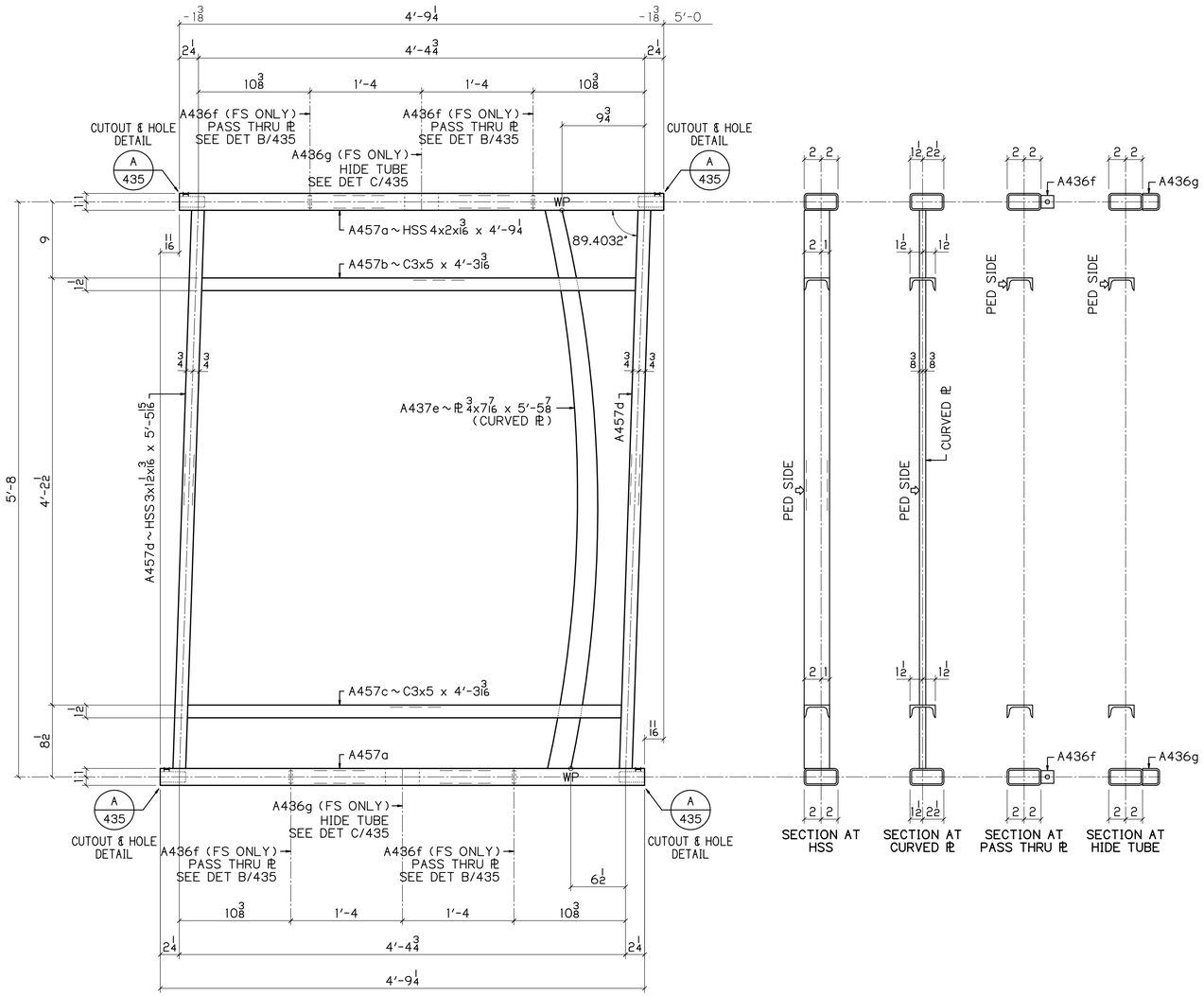

2 ~ A457

RAIL PANELS
PEDESTRIAN SIDE SHOWN

0.5968 1/8 / 12

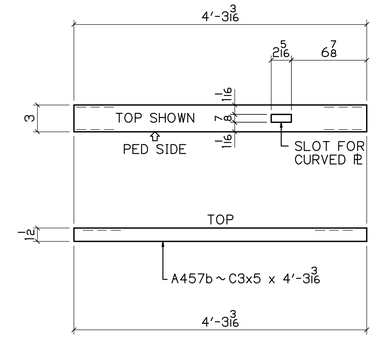

DETAIL OF A457b

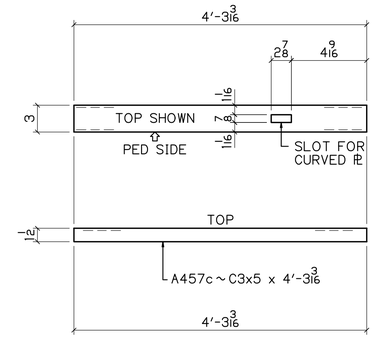

DETAIL OF A457c

UP

BILL OF MATERIAL

NO	MK	NO	SUBMK	MATERIAL	FT	IN	REMARKS	SORT
2	A457			RAIL PANELS				MM
		4	A457a	HSS 4x2x3/16	4	9 1/4	SC2E	TS
		2	A457b	C3x5	4	3 3/16	SC2E	C
		2	A457c	C3x5	4	3 3/16	SC2E	C
		4	A457d	HSS 3x1 1/2x3/16	5	5 15/16	SC2E	TS
		2	A437e	PL 3/4x7/16	5	5 7/8	CURVED PL	PL
		8	A436f	PL 3/8x1 1/2	0	1 1/2	PASS THRU PL	PL
		4	A436g	HSS 4x2x3/16	0	8	SPLIT IN HALF	TS

BU-19 BLUE-GREEN LINES
100% COMPLETE 08-16-21

P.H. DREW INC.
2450 N. RACEWAY RD. - P.O. BOX 34295
INDIANAPOLIS, INDIANA 46234
PHONE : (317) 297-5152
FAX : (317) 297-5313

APPROVAL: APPROVED 08-03-21

CUY-IR490 / SR010-2.09 / 19.28

DECORATIVE FENCE

RAIL PANELS

REVISION

REV	DATE	DESCRIPTION	BY

STATE	OHIO
COUNTY	CUYAHOGA (CITY OF CLEVELAND)
PROJECT	3000 (17)
CONTRACT	PID 96833
SECTION	
STRUCTURE	
STATE JOB	

APPROVAL RECORD

DATE	ISSUED	APP DATE	APPROVAL STATUS
08-16-21	FABRICATION		

CUSTOMER	LAKE ERIE CONSTRUCTION COMPANY
CONTRACTOR	
ARCH/ENG	
REFERENCE	
ITEM	
FINISH	SEE NOTES - SHT E400

DRAWN BY	CHECKED BY	MRH NO	JOB MGR	DWG STATUS	JOB NO.	TOTAL SHEETS	SHEET
MRH 07-21-21	SRF 08-12-21	1914	JL	FABRICATION 08-16-21	19-1108		457

SEE SHT 435 FOR DETAILS

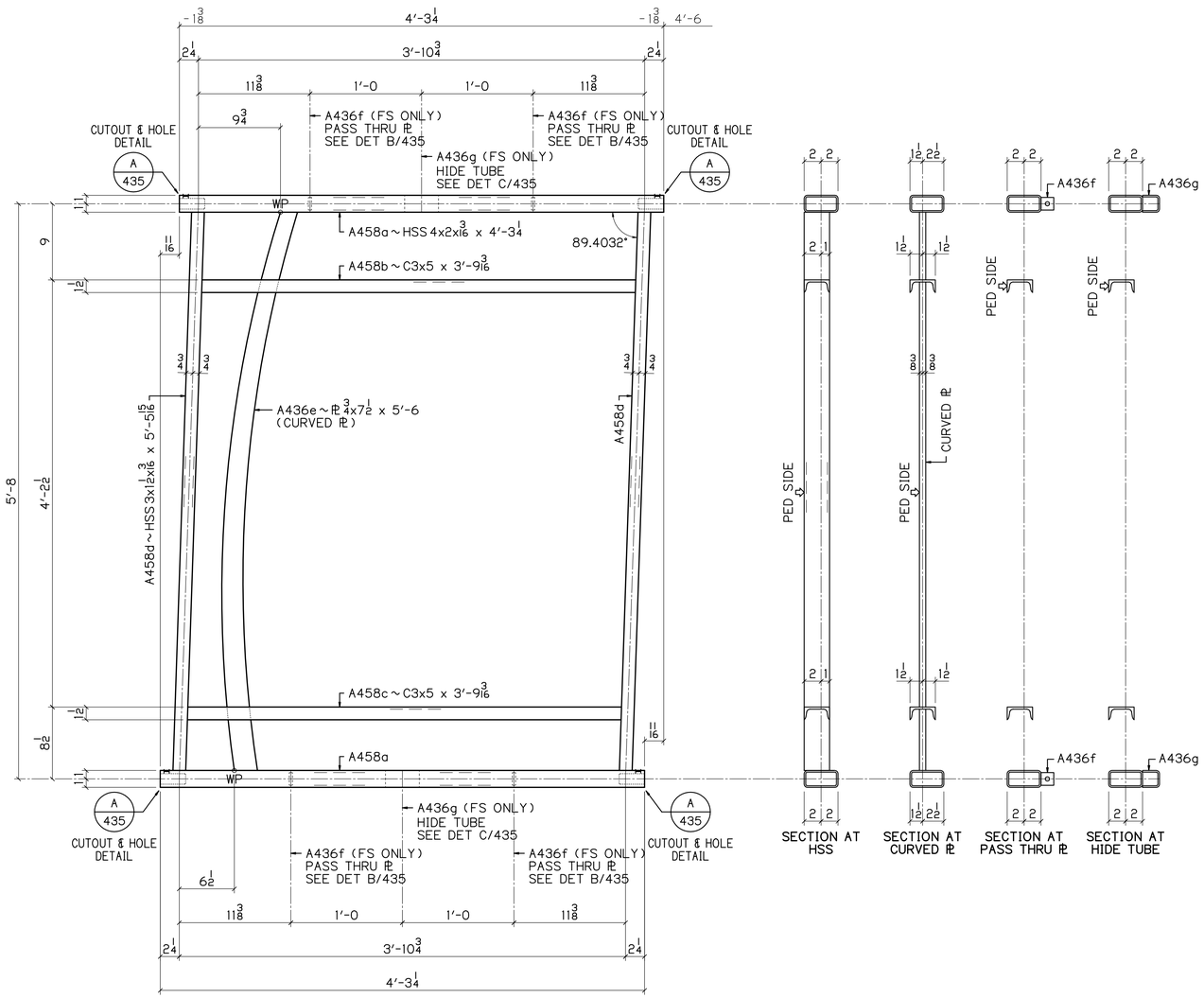

1 ~ A458

RAIL PANELS
PEDESTRIAN SIDE SHOWN

0.5968 1/8 / 12

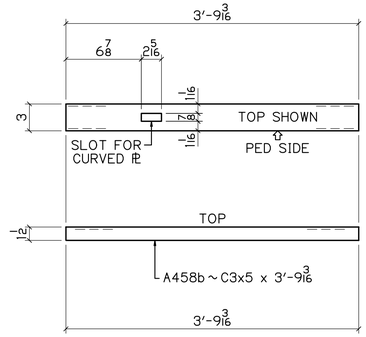

DETAIL OF A458b

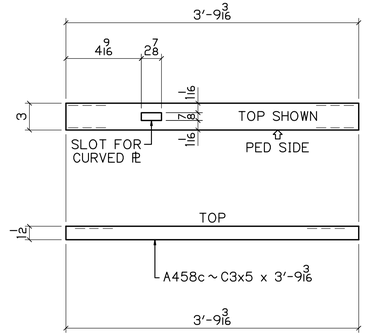

DETAIL OF A458c

UP

BILL OF MATERIAL

NO	MK	NO	SUBMK	MATERIAL	FT	IN	REMARKS	SORT
1	A458			RAIL PANELS				MM
		2	A458a	HSS 4x2x3/16	4	3 1/4	SC2E	TS
		1	A458b	C3x5	3	9 3/16	SC2E	C
		1	A458c	C3x5	3	9 3/16	SC2E	C
		2	A458d	HSS 3x1 1/2x3/16	5	5 15/16	SC2E	TS
		1	A436e	PL 3/4x7 1/2	5	6	CURVED PL	PL
		4	A436f	PL 3/8x1 1/2	0	1 1/2	PASS THRU PL	PL
		2	A436g	HSS 4x2x3/16	0	8	SPLIT IN HALF	TS

BU-19 BLUE-GREEN LINES

100% COMPLETE 08-16-21

P.H. DREW INC.
2450 N. RACEWAY RD. - P.O. BOX 34295
INDIANAPOLIS, INDIANA 46234
PHONE : (317) 297-5152
FAX : (317) 297-5313

APPROVAL: APPROVED 08-03-21

CUY-IR490 / SR010-2.09 / 19.28

DECORATIVE FENCE

RAIL PANELS

REVISION

REV	DATE	DESCRIPTION	BY

APPROVAL RECORD

DATE	ISSUED	APP DATE	APPROVAL STATUS
08-16-21	FABRICATION		

STATE	OHIO
COUNTY	CUYAHOGA (CITY OF CLEVELAND)
PROJECT	3000 (17)
CONTRACT	PID 96833
SECTION	
STRUCTURE	
STATE JOB	
CUSTOMER	LAKE ERIE CONSTRUCTION COMPANY
CONTRACTOR	
ARCH/ENG	
REFERENCE	
ITEM	
FINISH	SEE NOTES - SHT E400

DRAWN BY	CHECKED BY	MRH NO	JOB MGR	DWG STATUS	JOB NO.	TOTAL SHEETS	SHEET
MRH 07-21-21	SRF 08-12-21	1914	JL	FABRICATION 08-16-21	19-1108		458

SEE SHT 435 FOR DETAILS

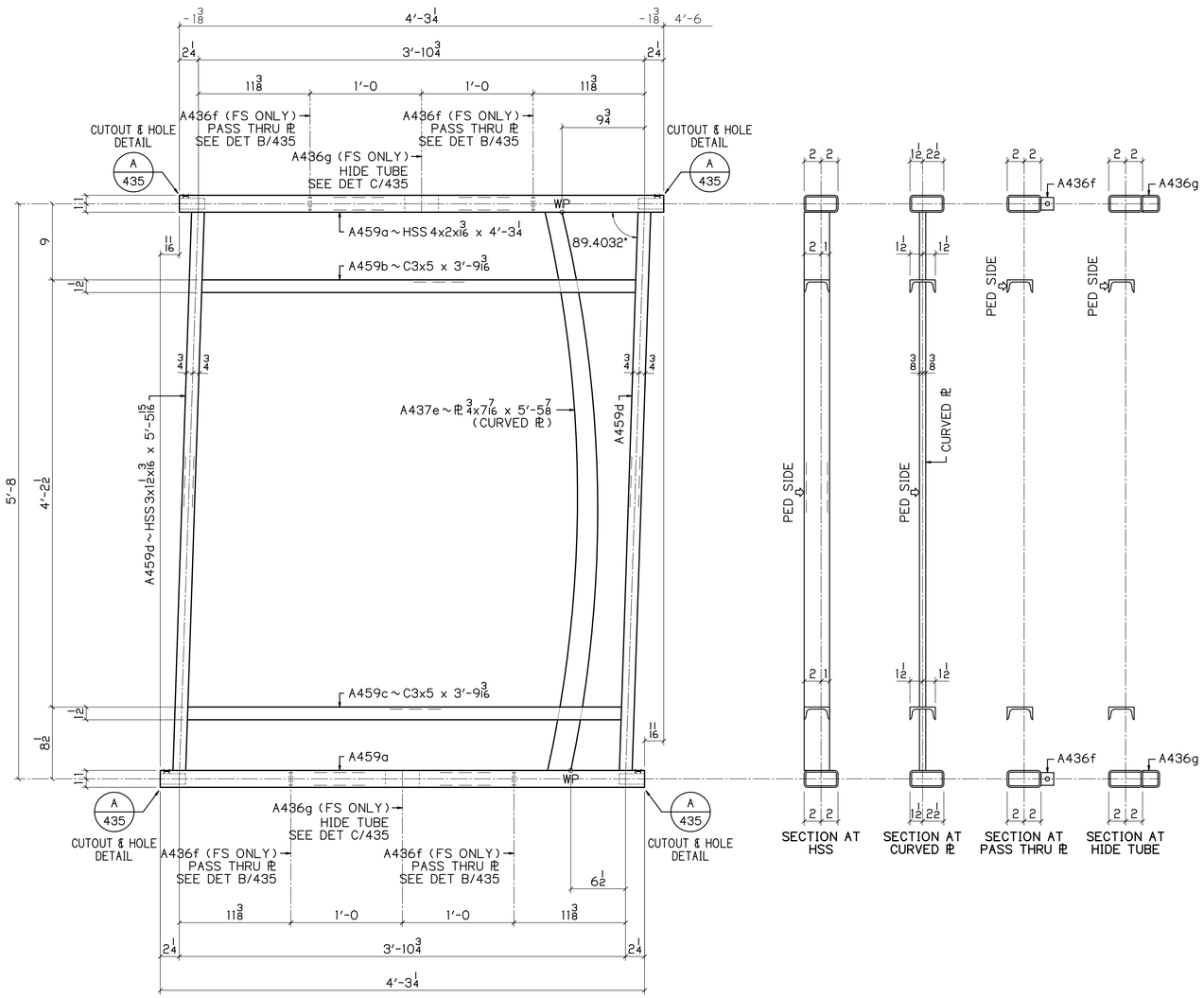

1 ~ A459
RAIL PANELS
PEDESTRIAN SIDE SHOWN

0.5968 1 1/8 / 12

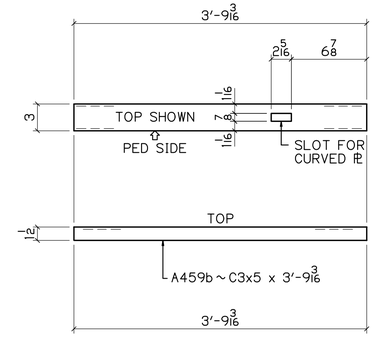

DETAIL OF A459b

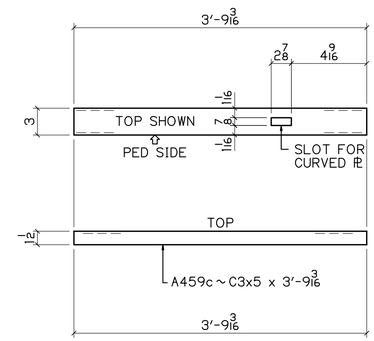

DETAIL OF A459c

BILL OF MATERIAL

NO	MK	NO	SUBMK	MATERIAL	FT	IN	REMARKS	SORT
1	A459			RAIL PANELS				MM
		2	A459a	HSS 4x2x3/16	4	3 1/4	SC2E	TS
		1	A459b	C3x5	3	9 3/16	SC2E	C
		1	A459c	C3x5	3	9 3/16	SC2E	C
		2	A459d	HSS 3x1 1/2x3/16	5	5 15/16	SC2E	TS
		1	A437e	PL 3/4x7/16	5	5 7/8	CURVED PL	PL
		4	A436f	PL 3/8x1 1/2	0	1 1/2	PASS THRU PL	PL
		2	A436g	HSS 4x2x3/16	0	8	SPLIT IN HALF	TS

BU-19 BLUE-GREEN LINES
100% COMPLETE 08-16-21

P.H. DREW INC.
2450 N. RACEWAY RD. - P.O. BOX 34295
INDIANAPOLIS, INDIANA 46234
PHONE : (317) 297-5152
FAX : (317) 297-5313

APPROVAL
APPROVED 08-03-21

CUY-IR490 / SR010-2.09 / 19.28
DECORATIVE FENCE
RAIL PANELS

REVISION

REV	DATE	DESCRIPTION	BY

STATE	OHIO
COUNTY	CUYAHOGA (CITY OF CLEVELAND)
PROJECT	3000 (17)
CONTRACT	PID 96833
SECTION	
STRUCTURE	
STATE JOB	

APPROVAL RECORD

DATE	ISSUED	APP DATE	APPROVAL STATUS
08-16-21	FABRICATION		

CUSTOMER	LAKE ERIE CONSTRUCTION COMPANY
CONTRACTOR	
ARCH/ENG	
REFERENCE	
ITEM	
FINISH	SEE NOTES - SHT E400

DRAWN BY	CHECKED BY	MRH NO	JOB MGR	DWG STATUS	JOB NO.	TOTAL SHEETS	SHEET
MRH 07-21-21	SRF 08-12-21	1914	JL	FABRICATION 08-16-21	19-1108		459

SEE SHT 435 FOR DETAILS

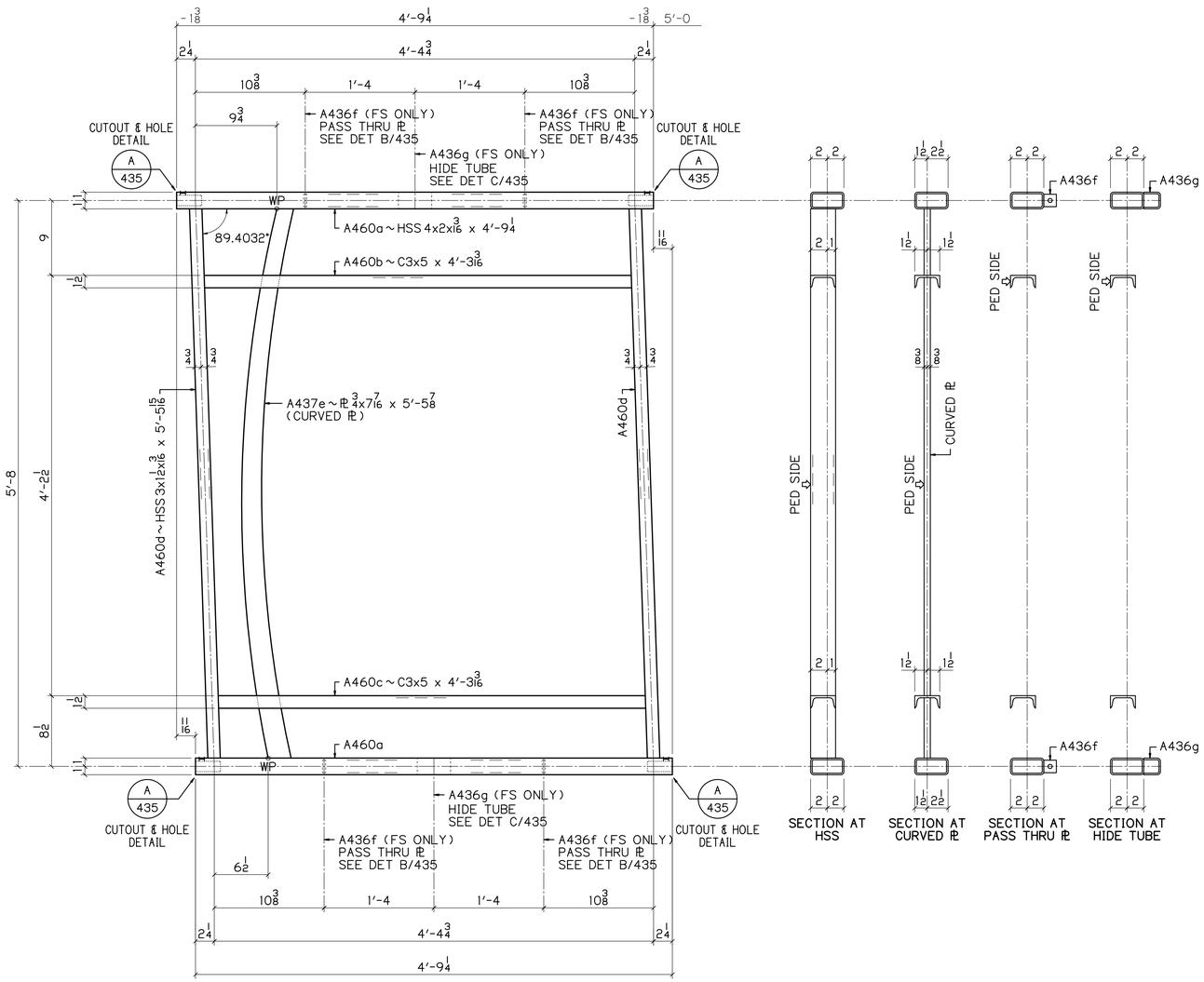

3 ~ A460

RAIL PANELS
PEDESTRIAN SIDE SHOWN

1/8 | 0.5968* / 12

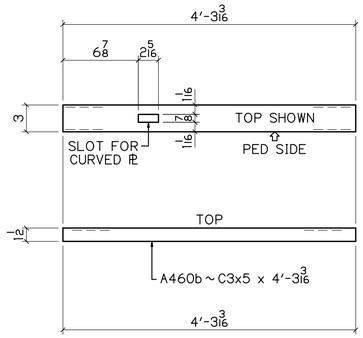

DETAIL OF A460b

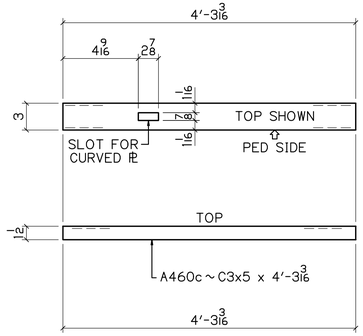

DETAIL OF A460c

BILL OF MATERIAL

NO	MK	NO	SUBMK	MATERIAL	FT	IN	REMARKS	SORT
3	A460			RAIL PANELS				MM
		6	A460a	HSS 4x2x3/16	4	9 1/4	SC2E	TS
		3	A460b	C3x5	4	3 3/16	SC2E	C
		3	A460c	C3x5	4	3 3/16	SC2E	C
		6	A460d	HSS 3x1 1/2x3/16	5	5 15/16	SC2E	TS
		3	A437e	PL 3/4x7/16	5	5 7/8	CURVED PL	PL
		12	A436f	PL 3/8x1 1/2	0	1 1/2	PASS THRU PL	PL
		6	A436g	HSS 4x2x3/16	0	8	SPLIT IN HALF	TS

BU-19 BLUE-GREEN LINES
100% COMPLETE 08-16-21

P.H. DREW INC.
2450 N. RACEWAY RD. - P.O. BOX 34295
INDIANAPOLIS, INDIANA 46234
PHONE : (317) 297-5152
FAX : (317) 297-5313

APPROVAL: APPROVED 08-03-21

CUY-IR490 / SR010-2.09 / 19.28

DECORATIVE FENCE

RAIL PANELS

REVISION

REV	DATE	DESCRIPTION	BY

STATE	OHIO
COUNTY	CUYAHOGA (CITY OF CLEVELAND)
PROJECT	3000 (17)
CONTRACT	PID 96833
SECTION	
STRUCTURE	
STATE JOB	

APPROVAL RECORD

DATE	ISSUED	APP DATE	APPROVAL STATUS
08-16-21	FABRICATION		

CUSTOMER	LAKE ERIE CONSTRUCTION COMPANY
CONTRACTOR	
ARCH/ENG	
REFERENCE	
ITEM	
FINISH	SEE NOTES - SHT E400

DRAWN BY	CHECKED BY	MRH NO	JOB MGR	DWG STATUS	JOB NO.	TOTAL SHEETS	SHEET
MRH 07-21-21	SRF 08-12-21	1914	JL	FABRICATION 08-16-21	19-1108		460

DN

SEE SHT 435 FOR DETAILS

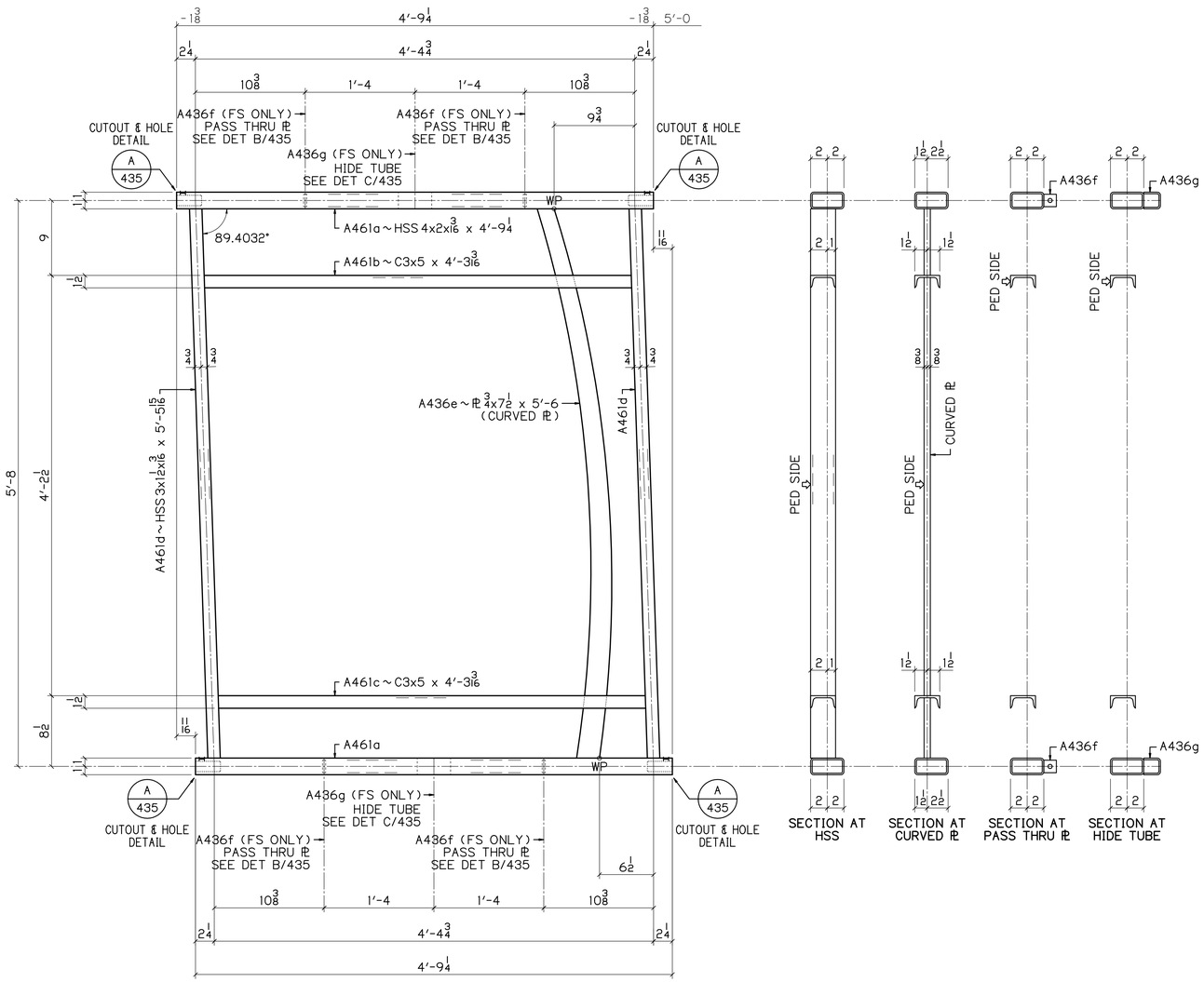

3 ~ A461

RAIL PANELS
PEDESTRIAN SIDE SHOWN

1/8 | 0.5968* / 12

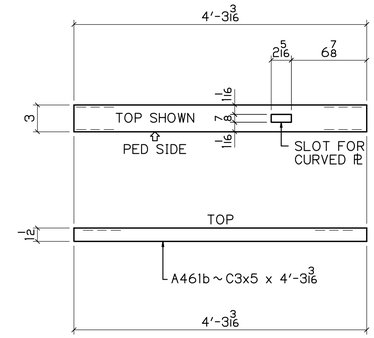

DETAIL OF A461b

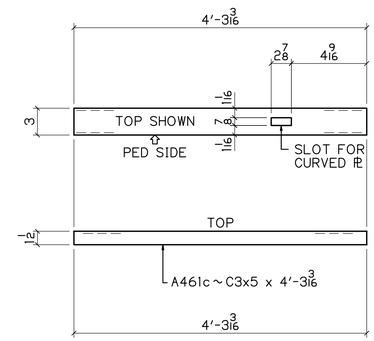

DETAIL OF A461c

BILL OF MATERIAL

NO	MK	NO	SUBMK	MATERIAL	FT	IN	REMARKS	SORT
3	A461			RAIL PANELS				MM
		6	A461a	HSS 4x2x3/16	4	9 1/4	SC2E	TS
		3	A461b	C3x5	4	3 3/16	SC2E	C
		3	A461c	C3x5	4	3 3/16	SC2E	C
		6	A461d	HSS 3x1 1/2x3/16	5	5 15/16	SC2E	TS
		3	A436e	PL 3/4x7 1/2	5	6	CURVED PL	PL
		12	A436f	PL 3/8x1 1/2	0	1 1/2	PASS THRU PL	PL
		6	A436g	HSS 4x2x3/16	0	8	SPLIT IN HALF	TS

BU-19 BLUE-GREEN LINES
100% COMPLETE 08-16-21

P.H. DREW INC.
2450 N. RACEWAY RD. - P.O. BOX 34295
INDIANAPOLIS, INDIANA 46234
PHONE : (317) 297-5152
FAX : (317) 297-5313

APPROVAL: APPROVED 08-03-21

CUY-IR490 / SR010-2.09 / 19.28

DECORATIVE FENCE

RAIL PANELS

REVISION

REV	DATE	DESCRIPTION	BY

STATE	OHIO
COUNTY	CUYAHOGA (CITY OF CLEVELAND)
PROJECT	3000 (17)
CONTRACT	PID 96833
SECTION	
STRUCTURE	
STATE JOB	

APPROVAL RECORD

DATE	ISSUED	APP DATE	APPROVAL STATUS
08-16-21	FABRICATION		

CUSTOMER	LAKE ERIE CONSTRUCTION COMPANY
CONTRACTOR	
ARCH/ENG	
REFERENCE	
ITEM	
FINISH	SEE NOTES - SHT E400

DRAWN BY	CHECKED BY	MRH NO	JOB MGR	DWG STATUS	JOB NO.	TOTAL SHEETS	SHEET
MRH 07-21-21	SRF 08-12-21	1914	JL	FABRICATION 08-16-21	19-1108		461

DN

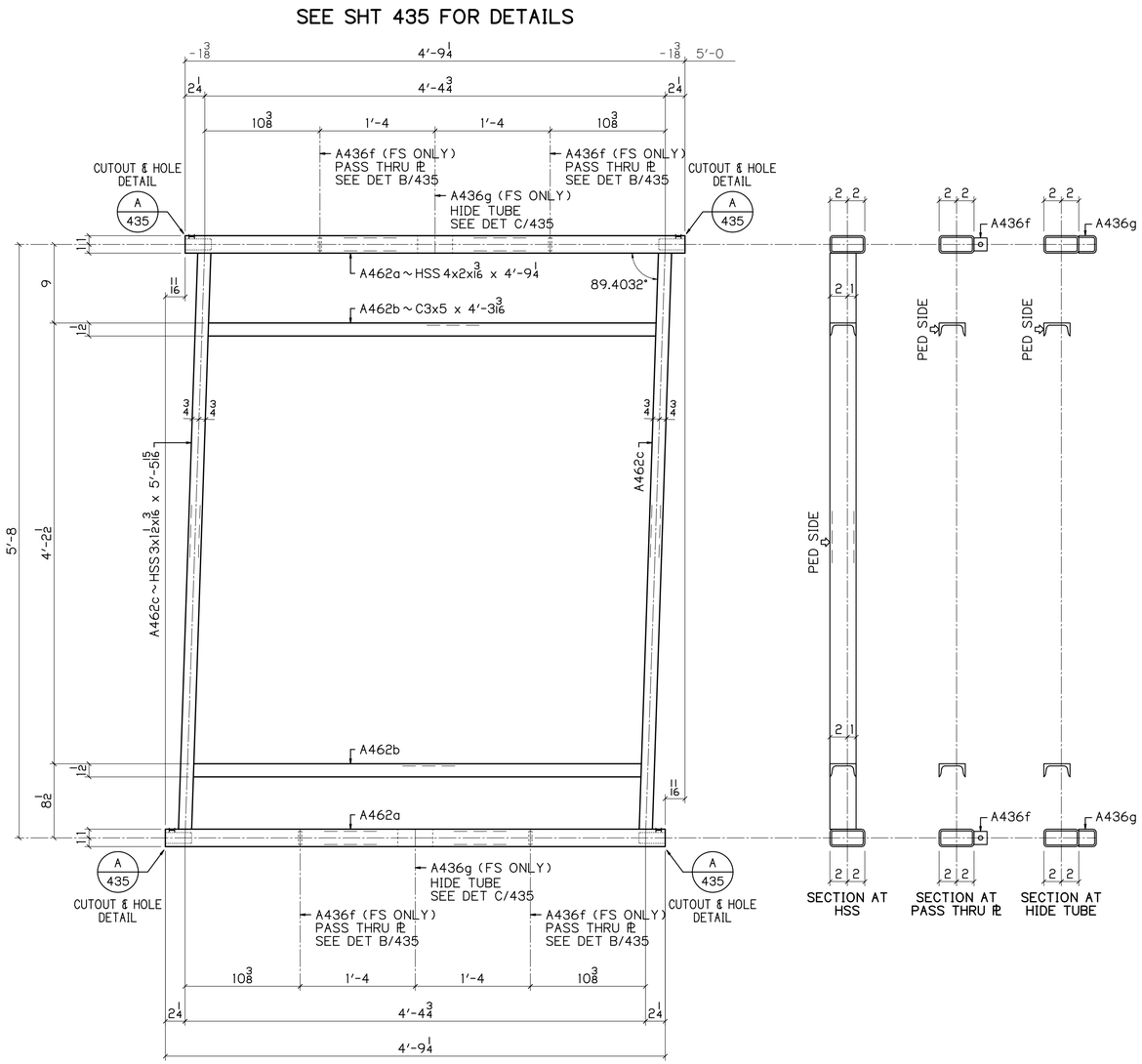

10 ~ A462

RAIL PANELS
PEDESTRIAN SIDE SHOWN

0.5968 1 1/8 / 12

UP

BILL OF MATERIAL

NO	MK	NO	SUBMK	MATERIAL	FT	IN	REMARKS	SORT
10	A462			RAIL PANELS				MM
		20	A462a	HSS 4x2x3/16	4	9 1/4	SC2E	TS
		20	A462b	C3x5	4	3 3/16	SC2E	C
		20	A462c	HSS 3x1 1/2x3/16	5	5 15/16	SC2E	TS
		40	A436f	PL 3/8x1 1/2	0	1 1/2	PASS THRU PL	PL
		20	A436g	HSS 4x2x3/16	0	8	SPLIT IN HALF	TS

BU-19 BLUE-GREEN LINES
100% COMPLETE 08-16-21

P.H. DREW INC.
2450 N. RACEWAY RD. - P.O. BOX 34295
INDIANAPOLIS, INDIANA 46234
PHONE : (317) 297-5152
FAX : (317) 297-5313

APPROVAL: APPROVED 08-03-21

CUY-IR490 / SR010-2.09 / 19.28

DECORATIVE FENCE

RAIL PANELS

REVISION	REV	DATE	DESCRIPTION	BY

APPROVAL RECORD	DATE	ISSUED	APP DATE	APPROVAL STATUS
	08-16-21	FABRICATION		

STATE	OHIO
COUNTY	CUYAHOGA (CITY OF CLEVELAND)
PROJECT	3000 (17)
CONTRACT	PID 96833
SECTION	
STRUCTURE	
STATE JOB	
CUSTOMER	LAKE ERIE CONSTRUCTION COMPANY
CONTRACTOR	
ARCH/ENG	
REFERENCE	
ITEM	
FINISH	SEE NOTES-SHT E400

DRAWN BY	CHECKED BY	MRH NO	JOB MGR	DWG STATUS	JOB NO.	TOTAL SHEETS	SHEET
MRH 07-21-21	SRF 08-12-21	1914	JL	FABRICATION 08-16-21	19-1108		462

SEE SHT 435 FOR DETAILS

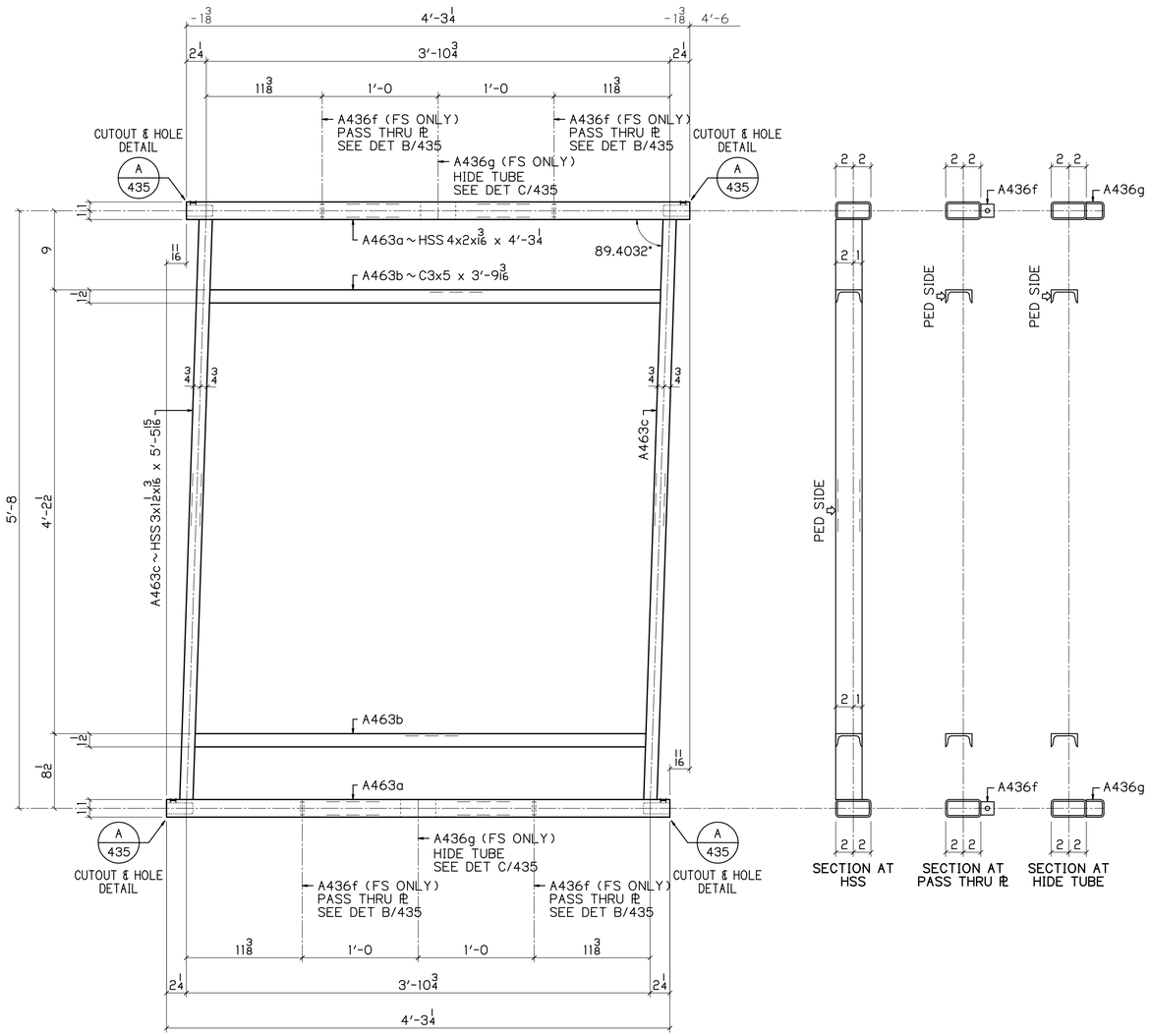

7 ~ A463

RAIL PANELS
PEDESTRIAN SIDE SHOWN

0.5968 1 1/8 / 12

UP

BILL OF MATERIAL

NO	MK	NO	SUBMK	MATERIAL	FT	IN	REMARKS	SORT
7	A463			RAIL PANELS				MM
		14	A463a	HSS 4x2x3/16	4	3 1/4	SC2E	TS
		14	A463b	C3x5	3	9 3/16	SC2E	C
		14	A463c	HSS 3x1 1/2x3/16	5	5 15/16	SC2E	TS
		28	A436f	PL 3/8x1 1/2	0	1 1/2	PASS THRU PL	PL
		14	A436g	HSS 4x2x3/16	0	8	SPLIT IN HALF	TS

BU-19 BLUE-GREEN LINES

100% COMPLETE 08-16-21

P.H. DREW INC.
2450 N. RACEWAY RD. - P.O. BOX 34295
INDIANAPOLIS, INDIANA 46234
PHONE : (317) 297-5152
FAX : (317) 297-5313

APPROVAL: APPROVED 08-03-21

CUY-IR490 / SR010-2.09 / 19.28

DECORATIVE FENCE

RAIL PANELS

REVISION	REV	DATE	DESCRIPTION	BY

APPROVAL RECORD	DATE	ISSUED	APP DATE	APPROVAL STATUS
	08-16-21	FABRICATION		

STATE	OHIO
COUNTY	CUYAHOGA (CITY OF CLEVELAND)
PROJECT	3000 (17)
CONTRACT	PID 96833
SECTION	
STRUCTURE	
STATE JOB	
CUSTOMER	LAKE ERIE CONSTRUCTION COMPANY
CONTRACTOR	
ARCH/ENG	
REFERENCE	
ITEM	
FINISH	SEE NOTES-SHT E400

DRAWN BY	CHECKED BY	MRH NO	JOB MGR	DWG STATUS	JOB NO.	TOTAL SHEETS	SHEET
MRH 07-21-21	SRF 08-12-21	1914	JL	FABRICATION 08-16-21	19-1108		463

SEE SHT 435 FOR DETAILS

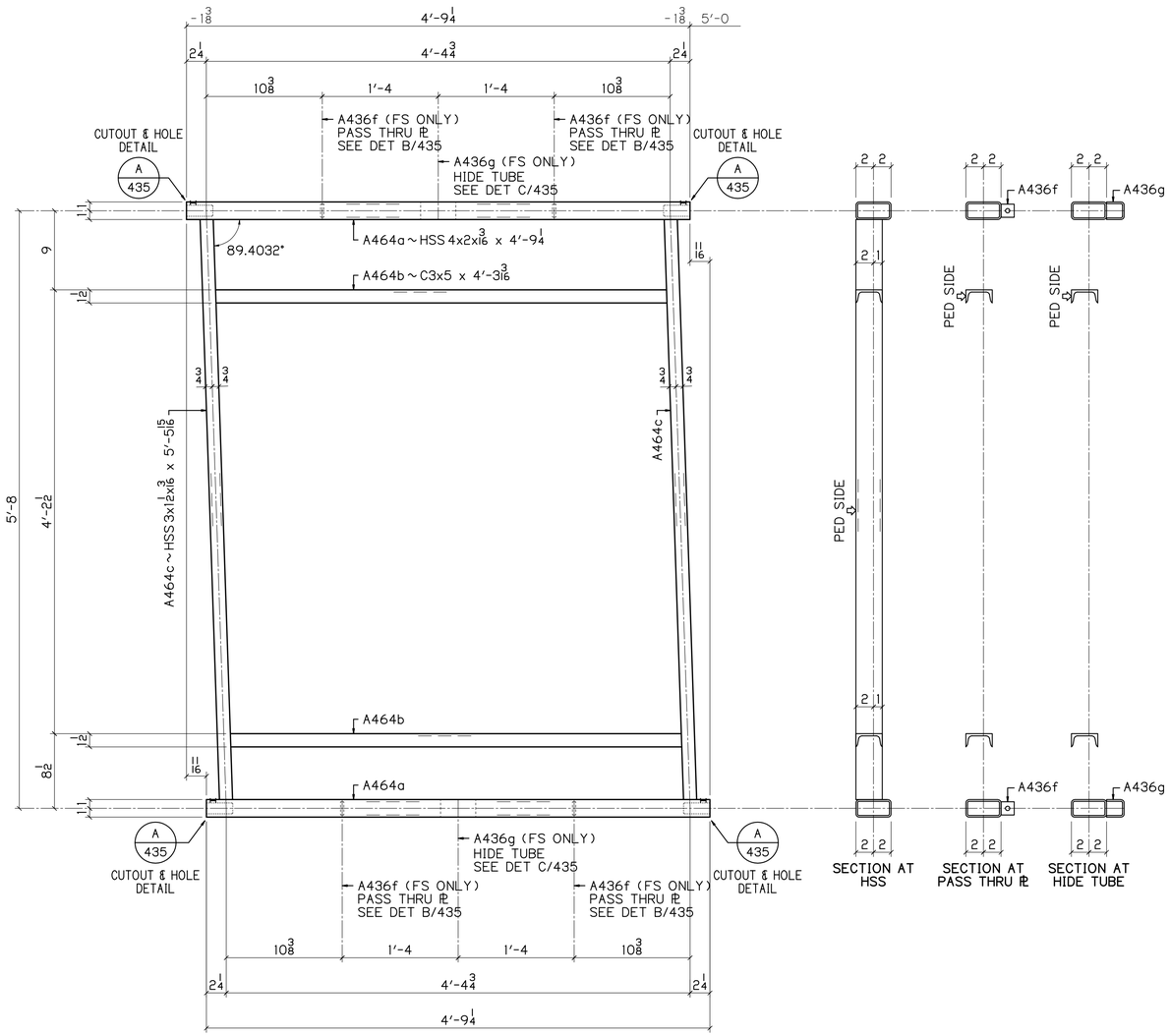

15 ~ A464

RAIL PANELS
PEDESTRIAN SIDE SHOWN

1/8 | 0.5968* / 12

DN

BILL OF MATERIAL

NO	MK	NO	SUBMK	MATERIAL	FT	IN	REMARKS	SORT
15	A464			RAIL PANELS				MM
		30	A464a	HSS 4x2x3/16	4	9 1/4	SC2E	TS
		30	A464b	C3x5	4	3 3/16	SC2E	C
		30	A464d	HSS 3x1 1/2x3/16	5	5 15/16	SC2E	TS
		60	A436f	PL 3/8x1 1/2	0	1 1/2	PASS THRU PL	PL
		30	A436g	HSS 4x2x3/16	0	8	SPLIT IN HALF	TS

BU-19 BLUE-GREEN LINES
100% COMPLETE 08-16-21

P.H. DREW INC.
2450 N. RACEWAY RD. - P.O. BOX 34295
INDIANAPOLIS, INDIANA 46234
PHONE : (317) 297-5152
FAX : (317) 297-5313

APPROVAL
APPROVED 08-03-21

CUY-IR490 / SR010-2.09 / 19.28

DECORATIVE FENCE

RAIL PANELS

REVISION

REV	DATE	DESCRIPTION	BY

APPROVAL RECORD

DATE	ISSUED	APP DATE	APPROVAL STATUS
08-16-21	FABRICATION		

STATE	OHIO
COUNTY	CUYAHOGA (CITY OF CLEVELAND)
PROJECT	3000 (17)
CONTRACT	PID 96833
SECTION	
STRUCTURE	
STATE JOB	
CUSTOMER	LAKE ERIE CONSTRUCTION COMPANY
CONTRACTOR	
ARCH/ENG	
REFERENCE	
ITEM	
FINISH	SEE NOTES-SHT E400

DRAWN BY	CHECKED BY	MRH NO	JOB MGR	DWG STATUS	JOB NO.	TOTAL SHEETS	SHEET
MRH 07-21-21	SRF 08-12-21	1914	JL	FABRICATION 08-16-21	19-1108		464

SEE SHT 435 FOR DETAILS

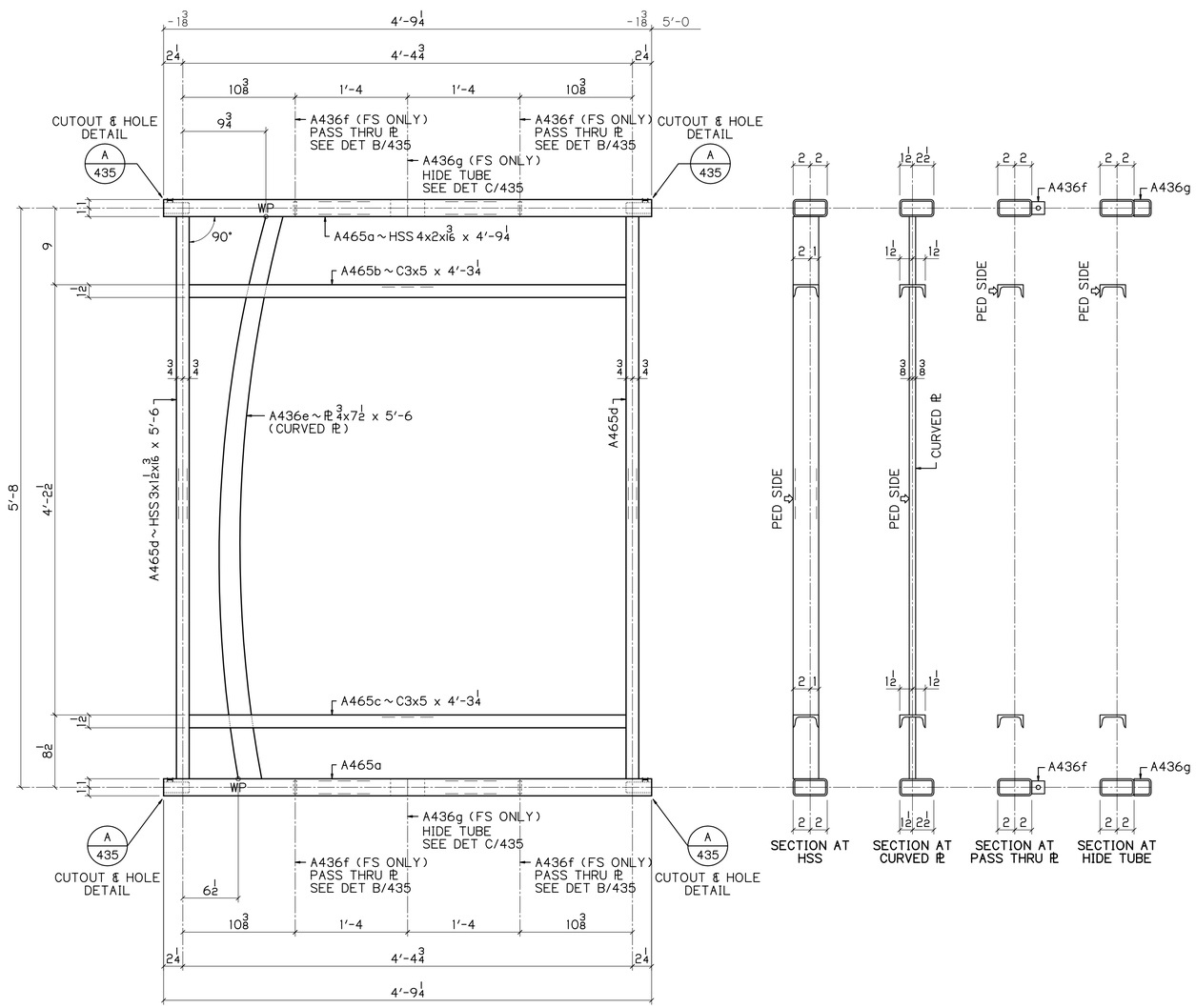

5 ~ A465

RAIL PANELS
PEDESTRIAN SIDE SHOWN
LEVEL

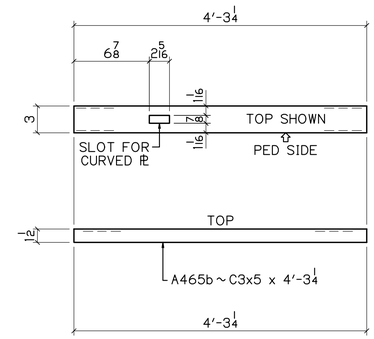

DETAIL OF A465b

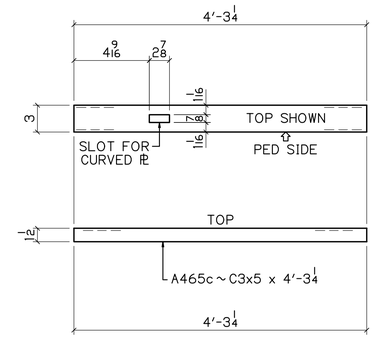

DETAIL OF A465c

BILL OF MATERIAL

NO	MK	NO	SUBMK	MATERIAL	FT	IN	REMARKS	SORT
5	A465			RAIL PANELS				MM
		10	A465a	HSS 4x2x3/16	4	9 1/4	SC2E	TS
		5	A465b	C3x5	4	3 1/4	SC2E	C
		5	A465c	C3x5	4	3 1/4	SC2E	C
		10	A465d	HSS 3x1 1/2x3/16	5	6	SC2E	TS
		5	A436e	PL 3/4x7 1/2	5	6	CURVED PL	PL
		20	A436f	PL 3/8x1 1/2	0	1 1/2	PASS THRU PL	PL
		10	A436g	HSS 4x2x3/16	0	8	SPLIT IN HALF	TS

BU-25 EAST 89TH STREET
100% COMPLETE 08-16-21

P.H. DREW INC.
2450 N. RACEWAY RD. - P.O. BOX 34295
INDIANAPOLIS, INDIANA 46234
PHONE : (317) 297-5152
FAX : (317) 297-5313

APPROVAL: APPROVED 08-03-21

CUY-IR490 / SR010-2.09 / 19.28

DECORATIVE FENCE

RAIL PANELS

REVISION

REV	DATE	DESCRIPTION	BY

APPROVAL RECORD

DATE	ISSUED	APP DATE	APPROVAL STATUS
08-16-21	FABRICATION		

STATE	OHIO
COUNTY	CUYAHOGA (CITY OF CLEVELAND)
PROJECT	3000 (17)
CONTRACT	PID 96833
SECTION	
STRUCTURE	
STATE JOB	
CUSTOMER	LAKE ERIE CONSTRUCTION COMPANY
CONTRACTOR	
ARCH/ENG	
REFERENCE	
ITEM	
FINISH	SEE NOTES - SHT E400

DRAWN BY	CHECKED BY	MRH NO	JOB MGR	DWG STATUS	JOB NO.	TOTAL SHEETS	SHEET
MRH 07-21-21	SRF 08-12-21	1914	JL	FABRICATION 08-16-21	19-1108		465

LEV

SEE SHT 435 FOR DETAILS

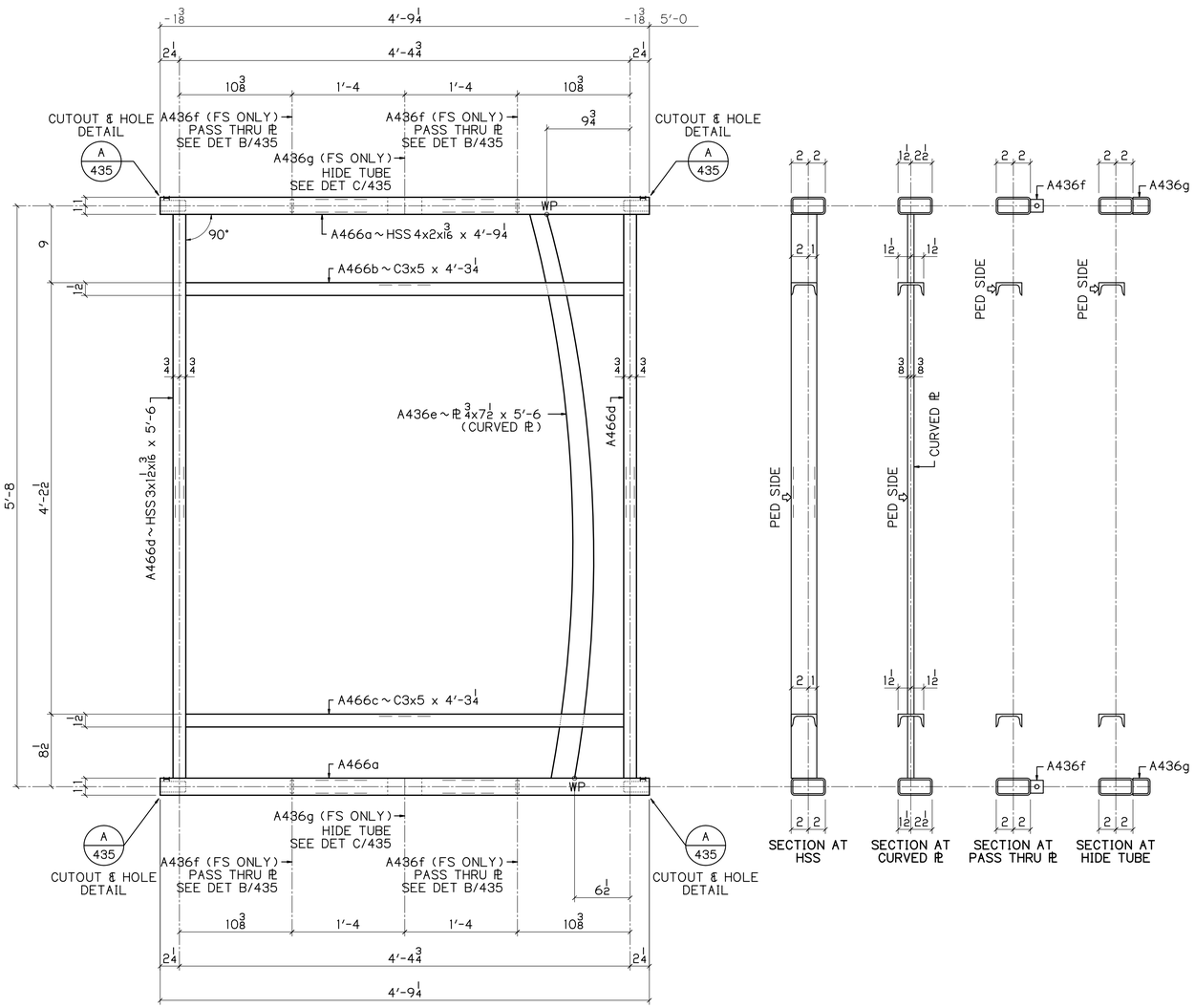

5 ~ A466

RAIL PANELS
PEDESTRIAN SIDE SHOWN
LEVEL

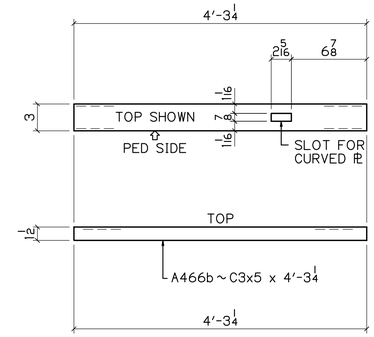

DETAIL OF A466b

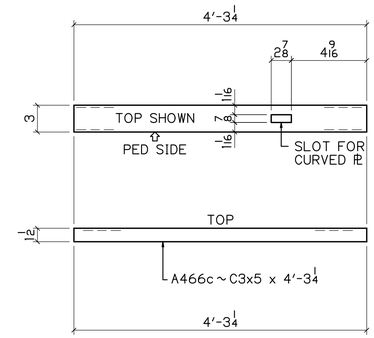

DETAIL OF A466c

LEV

BILL OF MATERIAL

NO	MK	NO	SUBMK	MATERIAL	FT	IN	REMARKS	SORT
5	A466			RAIL PANELS				MM
		10	A466a	HSS 4x2x3/16	4	9 1/4	SC2E	TS
		5	A466b	C3x5	4	3 1/4	SC2E	C
		5	A466c	C3x5	4	3 1/4	SC2E	C
		10	A466d	HSS 3x1 1/2x3/16	5	6	SC2E	TS
		5	A436e	PL 3/4x7 1/2	5	6	CURVED PL	PL
		20	A436f	PL 3/8x1 1/2	0	1 1/2	PASS THRU PL	PL
		10	A436g	HSS 4x2x3/16	0	8	SPLIT IN HALF	TS

BU-25 EAST 89TH STREET
100% COMPLETE 08-16-21

P.H. DREW INC.
2450 N. RACEWAY RD. - P.O. BOX 34295
INDIANAPOLIS, INDIANA 46234
PHONE : (317) 297-5152
FAX : (317) 297-5313

APPROVAL: APPROVED 08-03-21

CUY-IR490 / SR010-2.09 / 19.28

DECORATIVE FENCE

RAIL PANELS

REVISION

REV	DATE	DESCRIPTION	BY

APPROVAL RECORD

DATE	ISSUED	APP DATE	APPROVAL STATUS
08-16-21	FABRICATION		

STATE	OHIO
COUNTY	CUYAHOGA (CITY OF CLEVELAND)
PROJECT	3000 (17)
CONTRACT	PID 96833
SECTION	
STRUCTURE	
STATE JOB	
CUSTOMER	LAKE ERIE CONSTRUCTION COMPANY
CONTRACTOR	
ARCH/ENG	
REFERENCE	
ITEM	
FINISH	SEE NOTES - SHT E400

DRAWN BY	CHECKED BY	MRH NO	JOB MGR	DWG STATUS	JOB NO.	TOTAL SHEETS	SHEET
MRH 07-21-21	SRF 08-12-21	1914	JL	FABRICATION 08-16-21	19-1108		466

SEE SHT 435 FOR DETAILS

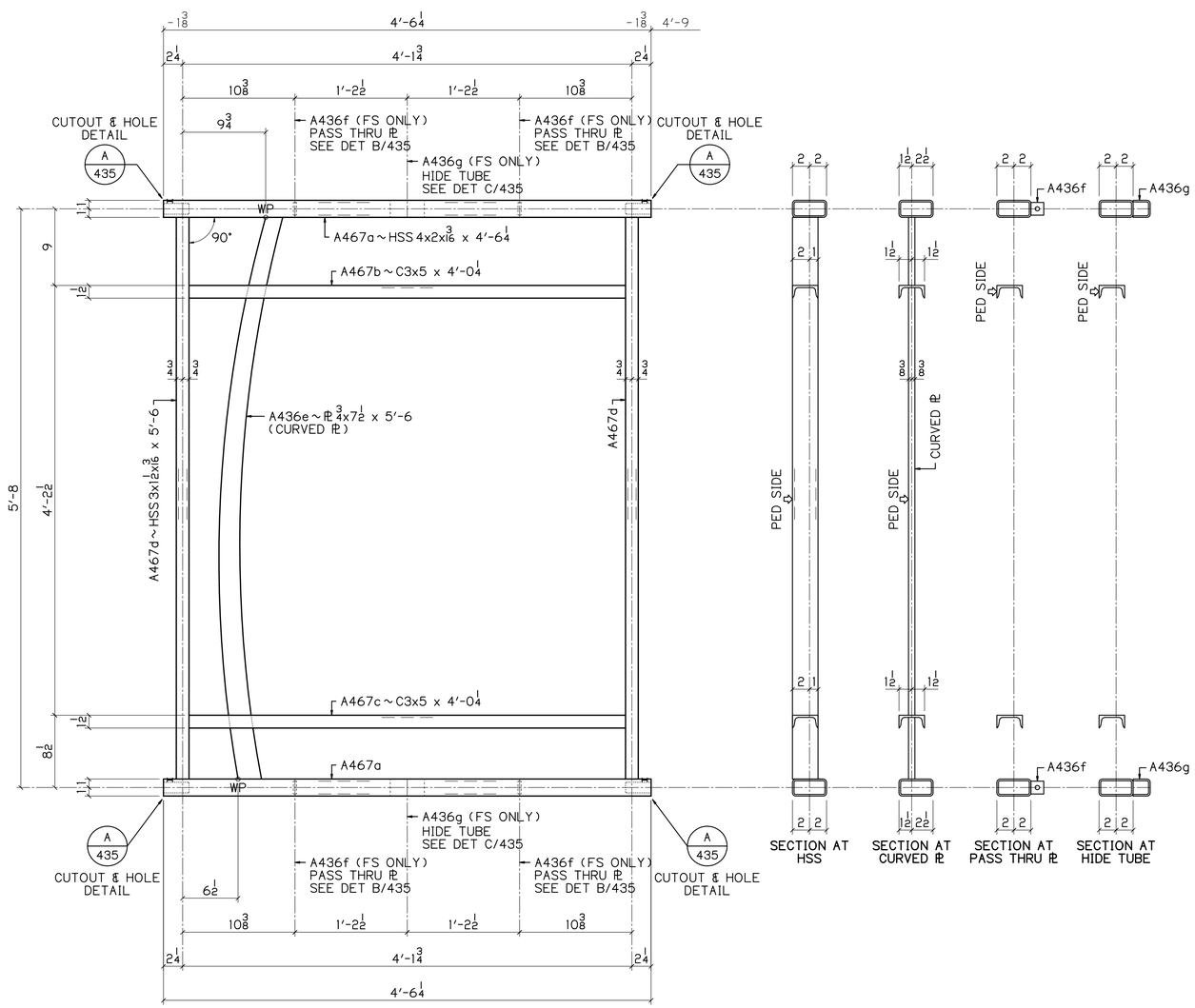

1 ~ A467

RAIL PANELS
PEDESTRIAN SIDE SHOWN
LEVEL

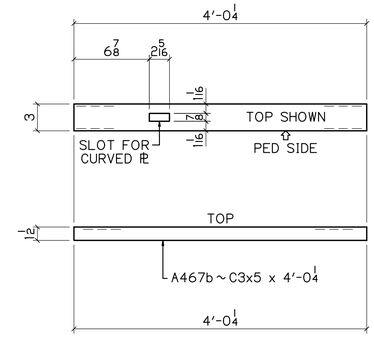

DETAIL OF A467b

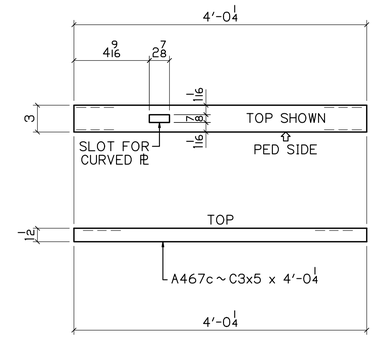

DETAIL OF A467c

BILL OF MATERIAL

NO	MK	NO	SUBMK	MATERIAL	FT	IN	REMARKS	SORT
1	A467			RAIL PANELS				MM
		2	A467a	HSS 4x2x3/16	4	6 1/4	SC2E	TS
		1	A467b	C3x5	4	0 1/4	SC2E	C
		1	A467c	C3x5	4	0 1/4	SC2E	C
		2	A467d	HSS 3x1 1/2x3/16	5	6	SC2E	TS
		2	A436e	PL 3/4x7 1/2	5	6	CURVED PL	PL
		4	A436f	PL 3/8x1 1/2	0	1 1/2	PASS THRU PL	PL
		2	A436g	HSS 4x2x3/16	0	8	SPLIT IN HALF	TS

BU-25 EAST 89TH STREET
100% COMPLETE 08-16-21

P.H. DREW INC.
2450 N. RACEWAY RD. - P.O. BOX 34295
INDIANAPOLIS, INDIANA 46234
PHONE : (317) 297-5152
FAX : (317) 297-5313

APPROVAL: APPROVED 08-03-21

CUY-IR490 / SR010-2.09 / 19.28

DECORATIVE FENCE

RAIL PANELS

REVISION

REV	DATE	DESCRIPTION	BY

APPROVAL RECORD

DATE	ISSUED	APP DATE	APPROVAL STATUS
08-16-21	FABRICATION		

STATE	OHIO
COUNTY	CUYAHOGA (CITY OF CLEVELAND)
PROJECT	3000 (17)
CONTRACT	PID 96833
SECTION	
STRUCTURE	
STATE JOB	
CUSTOMER	LAKE ERIE CONSTRUCTION COMPANY
CONTRACTOR	
ARCH/ENG	
REFERENCE	
ITEM	
FINISH	SEE NOTES - SHT E400

DRAWN BY	CHECKED BY	MRH NO	JOB MGR	DWG STATUS	JOB NO.	TOTAL SHEETS	SHEET
MRH 07-21-21	SRF 08-12-21	1914	JL	FABRICATION 08-16-21	19-1108		467

LEV

SEE SHT 435 FOR DETAILS

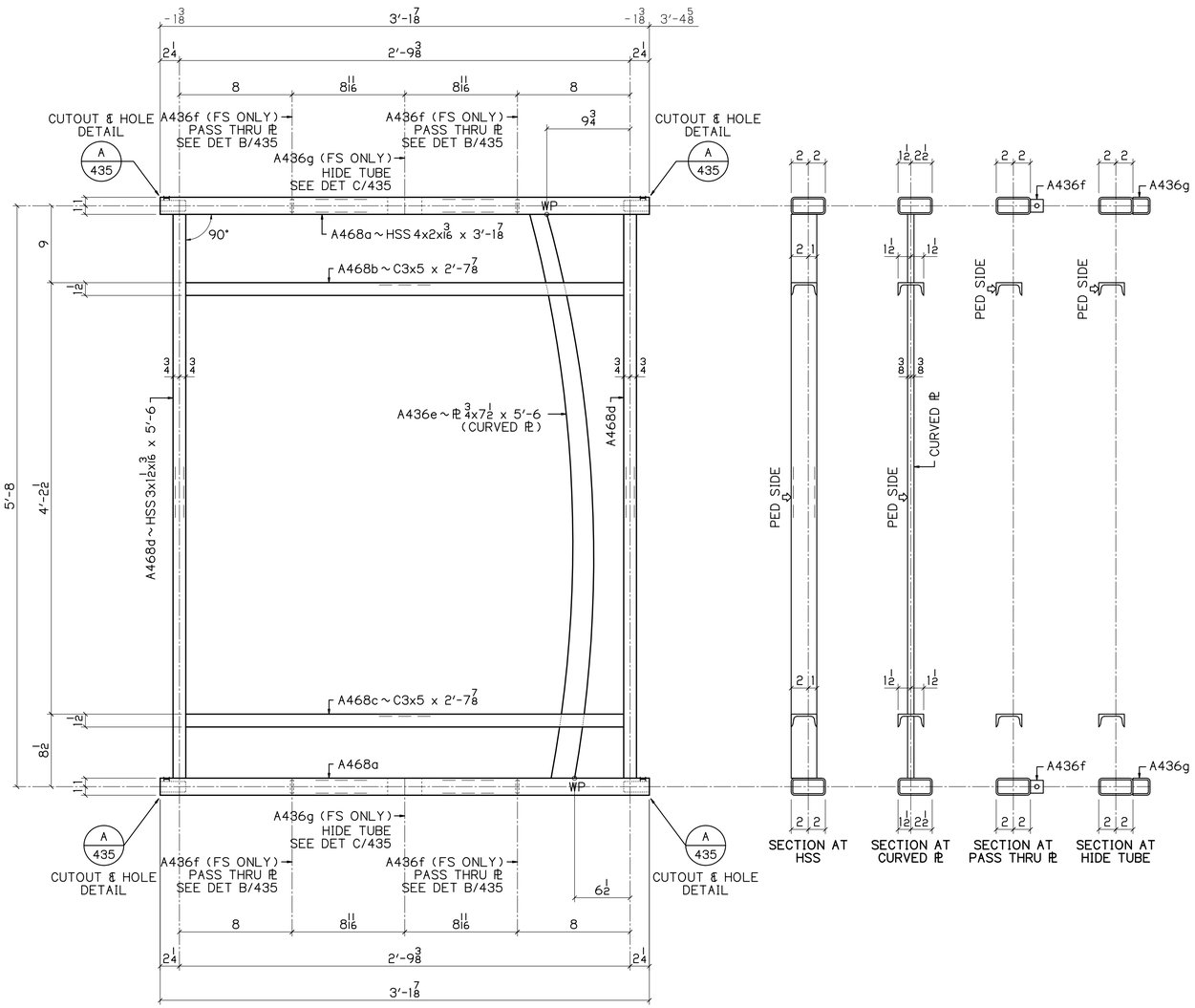

1 ~ A468

RAIL PANELS
PEDESTRIAN SIDE SHOWN
LEVEL

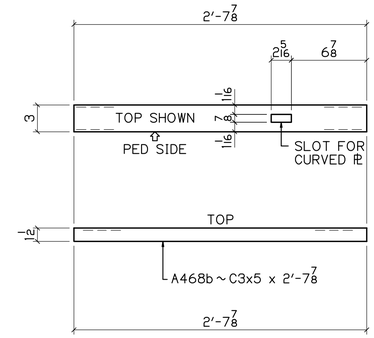

DETAIL OF A468b

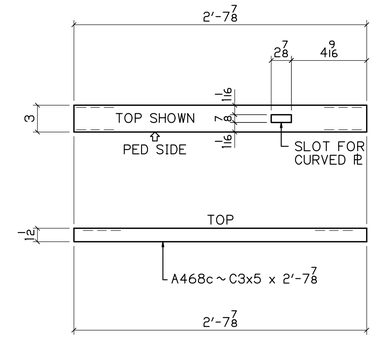

DETAIL OF A468c

LEV

BILL OF MATERIAL

NO	MK	NO	SUBMK	MATERIAL	FT	IN	REMARKS	SORT
1	A468			RAIL PANELS				MM
		2	A468a	HSS 4x2x3/16	3	1 7/8	SC2E	TS
		1	A468b	C3x5	2	7 7/8	SC2E	C
		1	A468c	C3x5	2	7 7/8	SC2E	C
		2	A468d	HSS 3x1 1/2x3/16	5	6	SC2E	TS
		1	A436e	PL 3/4x7 1/2	5	6	CURVED PL	PL
		4	A436f	PL 3/8x1 1/2	0	1 1/2	PASS THRU PL	PL
		2	A436g	HSS 4x2x3/16	0	8	SPLIT IN HALF	TS

BU-25 EAST 89TH STREET

100% COMPLETE 08-16-21

P.H. DREW INC.
2450 N. RACEWAY RD. - P.O. BOX 34295
INDIANAPOLIS, INDIANA 46234
PHONE : (317) 297-5152
FAX : (317) 297-5313

APPROVAL: APPROVED 08-03-21

CUY-IR490 / SR010-2.09 / 19.28

DECORATIVE FENCE

RAIL PANELS

REVISION

REV	DATE	DESCRIPTION	BY

APPROVAL RECORD

DATE	ISSUED	APP DATE	APPROVAL STATUS
08-16-21	FABRICATION		

STATE	OHIO
COUNTY	CUYAHOGA (CITY OF CLEVELAND)
PROJECT	3000 (17)
CONTRACT	PID 96833
SECTION	
STRUCTURE	
STATE JOB	
CUSTOMER	LAKE ERIE CONSTRUCTION COMPANY
CONTRACTOR	
ARCH/ENG	
REFERENCE	
ITEM	
FINISH	SEE NOTES - SHT E400

DRAWN BY	CHECKED BY	MRH NO	JOB MGR	DWG STATUS	JOB NO.	TOTAL SHEETS	SHEET
MRH 07-21-21	SRF 08-12-21	1914	JL	FABRICATION 08-16-21	19-1108		468

SEE SHT 435 FOR DETAILS

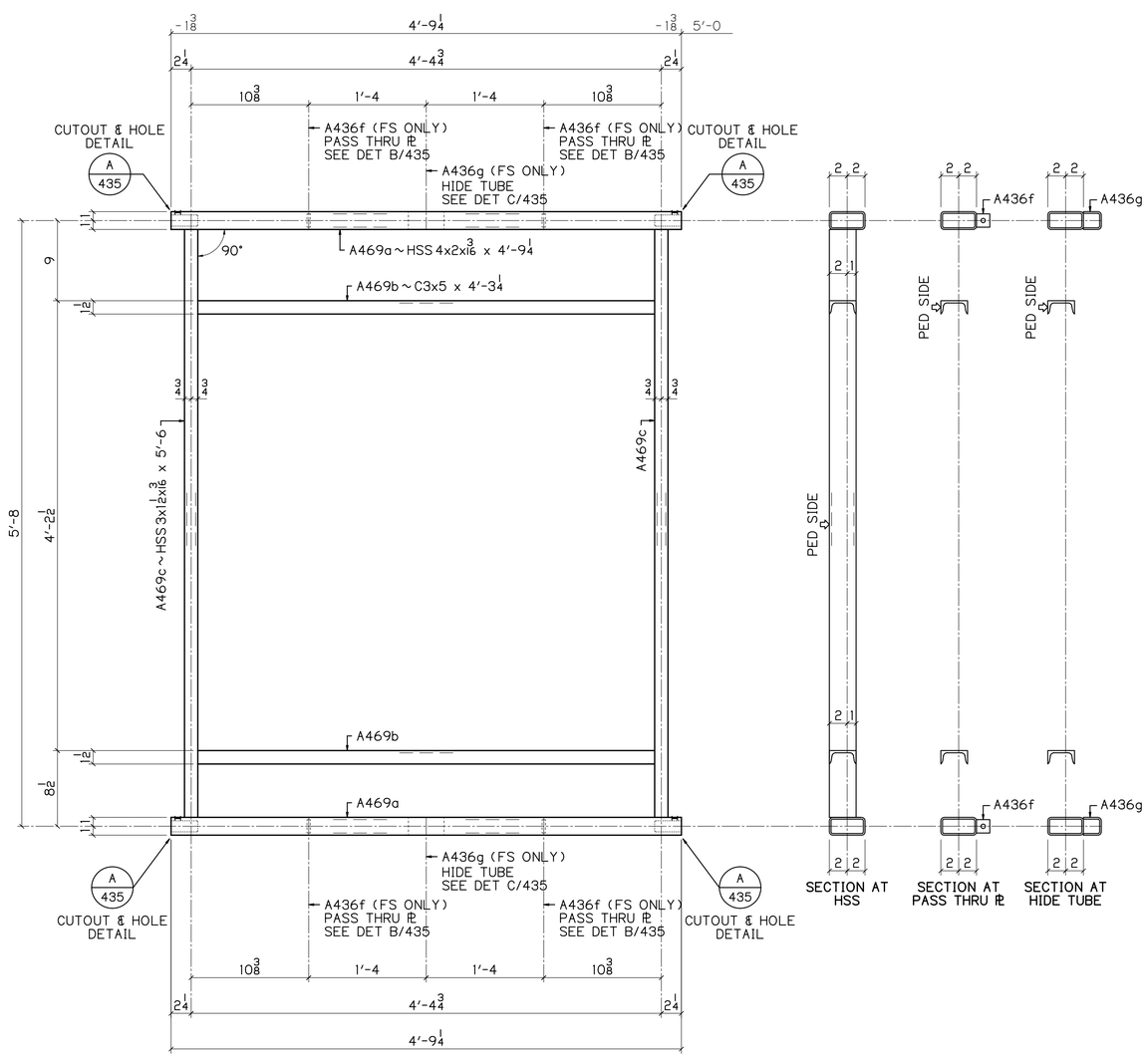

25 ~ A469

RAIL PANELS
PEDESTRIAN SIDE SHOWN
LEVEL

LEV

BILL OF MATERIAL

NO	MK	NO	SUBMK	MATERIAL	FT	IN	REMARKS	SORT
25	A469			RAIL PANELS				MM
		50	A469a	HSS 4x2x3/16	4	9 1/4	SC2E	TS
		50	A469b	C3x5	4	3 1/4	SC2E	C
		50	A469c	HSS 3x1 1/2x3/16	5	6	SC2E	TS
		100	A436f	PL 3/8x1 1/2	0	1 1/2	PASS THRU PL	PL
		50	A436g	HSS 4x2x3/16	0	8	SPLIT IN HALF	TS

BU-25 EAST 89TH STREET
100% COMPLETE 08-16-21

P.H. DREW INC.
2450 N. RACEWAY RD. - P.O. BOX 34295
INDIANAPOLIS, INDIANA 46234
PHONE : (317) 297-5152
FAX : (317) 297-5313

APPROVAL: APPROVED 08-03-21

CUY-IR490 / SR010-2.09 / 19.28

DECORATIVE FENCE

RAIL PANELS

REVISION

REV	DATE	DESCRIPTION	BY

STATE	OHIO
COUNTY	CUYAHOGA (CITY OF CLEVELAND)
PROJECT	3000 (17)
CONTRACT	PID 96833
SECTION	
STRUCTURE	
STATE JOB	

APPROVAL RECORD

DATE	ISSUED	APP DATE	APPROVAL STATUS
08-16-21	FABRICATION		

CUSTOMER	LAKE ERIE CONSTRUCTION COMPANY
CONTRACTOR	
ARCH/ENG	
REFERENCE	
ITEM	
FINISH	SEE NOTES - SHT E400

DRAWN BY	CHECKED BY	MRH NO	JOB MGR	DWG STATUS	JOB NO.	TOTAL SHEETS	SHEET
MRH 07-21-21	SRF 08-12-21	1914	JL	FABRICATION 08-16-21	19-1108		469

SEE SHT 435 FOR DETAILS

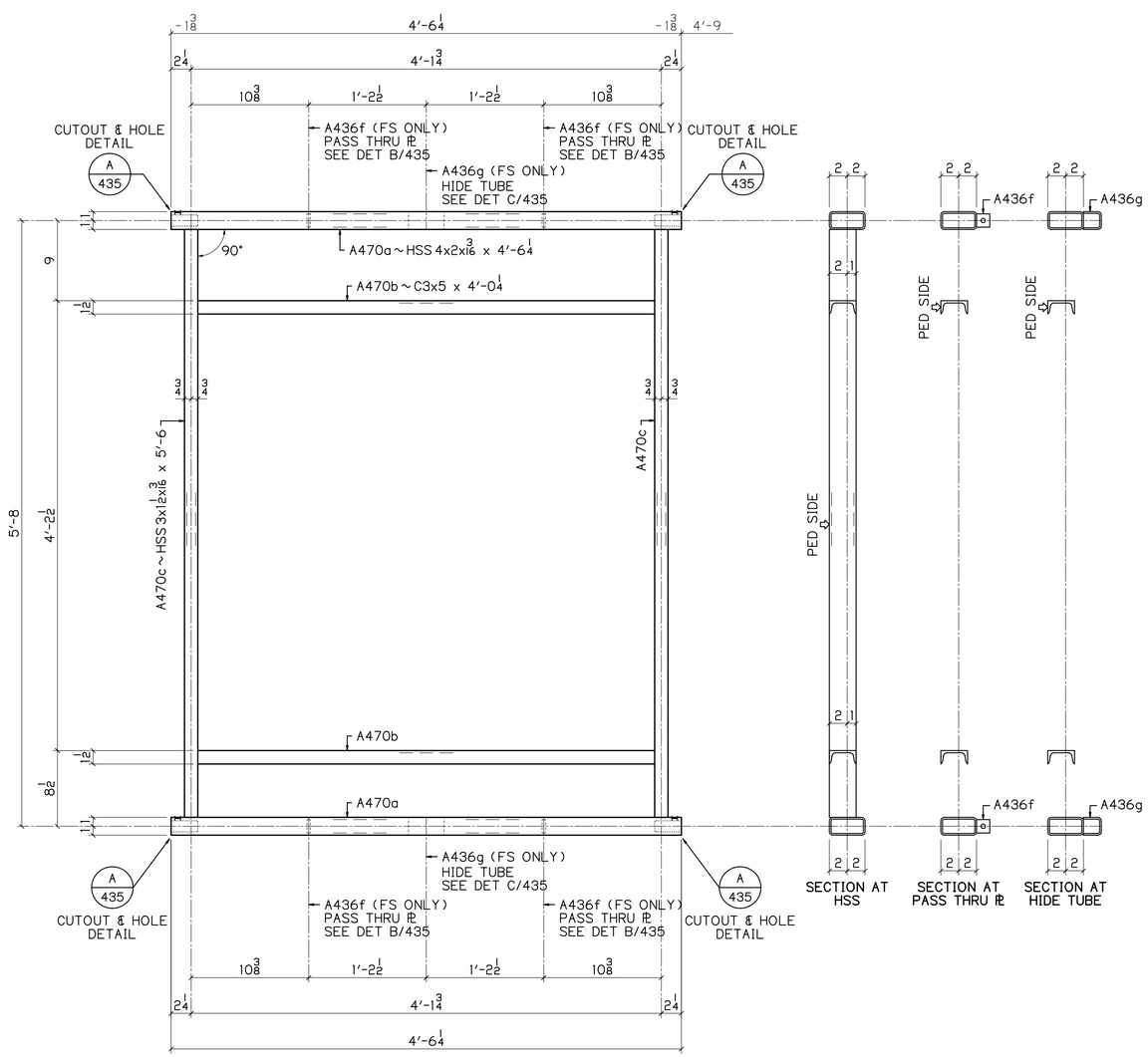

6 ~ A470

RAIL PANELS
PEDESTRIAN SIDE SHOWN

LEVEL

LEV

BILL OF MATERIAL

NO	MK	NO	SUBMK	MATERIAL	FT	IN	REMARKS	SORT
6	A470			RAIL PANELS				MM
		12	A470a	HSS 4x2x3/16	4	6 1/4	SC2E	TS
		12	A470b	C3x5	4	0 1/4	SC2E	C
		12	A470c	HSS 3x1 1/2x3/16	5	6	SC2E	TS
		24	A436f	PL 3/8x1 1/2	0	1 1/2	PASS THRU PL	PL
		12	A436g	HSS 4x2x3/16	0	8	SPLIT IN HALF	TS

BU-25 EAST 89TH STREET
100% COMPLETE 08-16-21

P.H. DREW INC.
2450 N. RACEWAY RD. - P.O. BOX 34295
INDIANAPOLIS, INDIANA 46234
PHONE : (317) 297-5152
FAX : (317) 297-5313

APPROVAL: APPROVED 08-03-21

CUY-IR490 / SR010-2.09 / 19.28

DECORATIVE FENCE

RAIL PANELS

REVISION

REV	DATE	DESCRIPTION	BY

STATE	OHIO
COUNTY	CUYAHOGA (CITY OF CLEVELAND)
PROJECT	3000 (17)
CONTRACT	PID 96833
SECTION	
STRUCTURE	
STATE JOB	

APPROVAL RECORD

DATE	ISSUED	APP DATE	APPROVAL STATUS
08-16-21	FABRICATION		

CUSTOMER	LAKE ERIE CONSTRUCTION COMPANY
CONTRACTOR	
ARCH/ENG	
REFERENCE	
ITEM	
FINISH	SEE NOTES-SHT E400

DRAWN BY	CHECKED BY	MRH NO	JOB MGR	DWG STATUS	JOB NO.	TOTAL SHEETS	SHEET
MRH 07-21-21	SRF 08-12-21	1914	JL	FABRICATION 08-16-21	19-1108		470

SEE SHT 435 FOR DETAILS

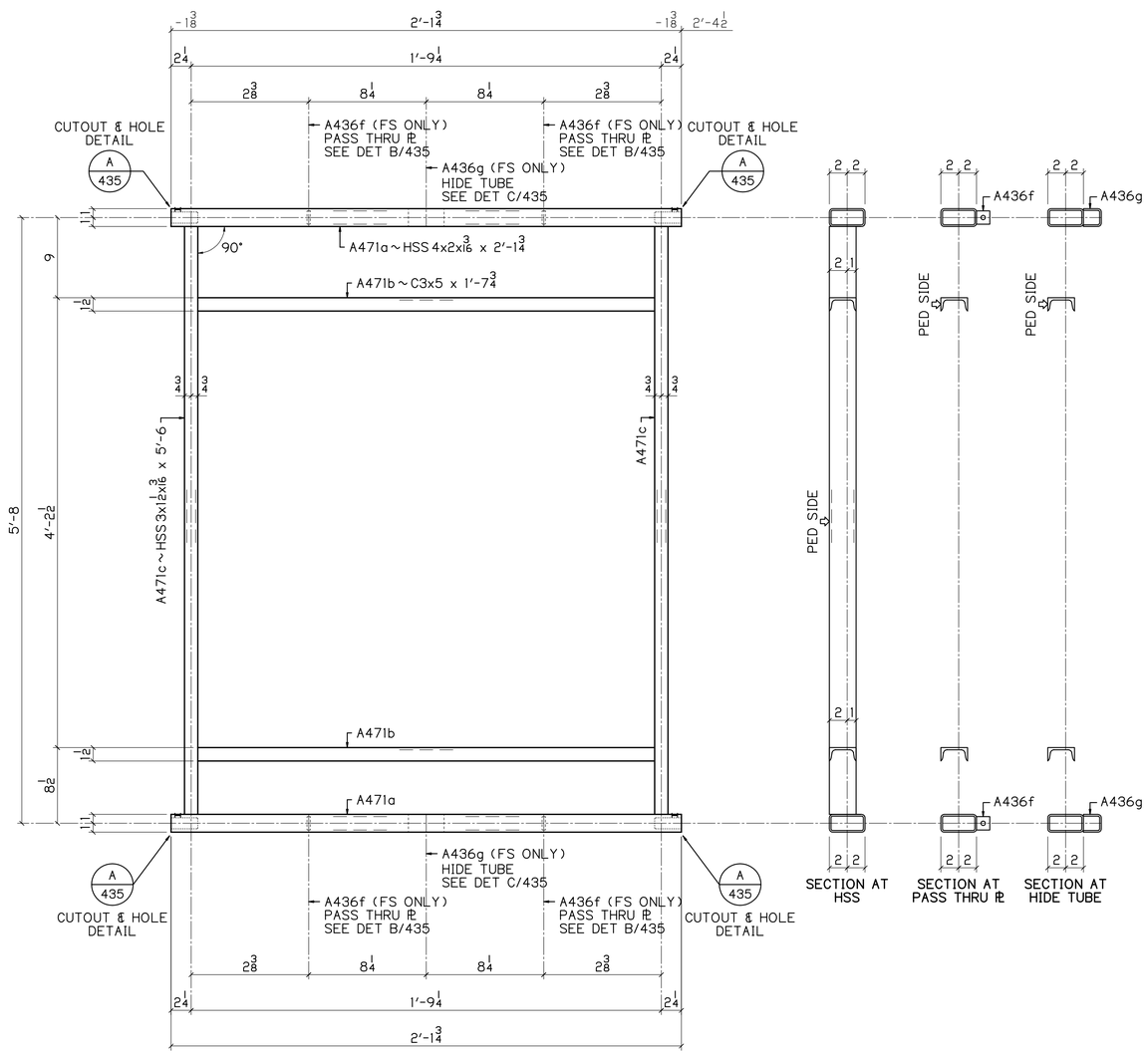

1 ~ A471

RAIL PANELS
PEDESTRIAN SIDE SHOWN
LEVEL

LEV

BILL OF MATERIAL

NO	MK	NO	SUBMK	MATERIAL	FT	IN	REMARKS	SORT
1	A471			RAIL PANELS				MM
		2	A471a	HSS 4x2x1/16	2	1 3/4	SC2E	TS
		2	A471b	C3x5	1	7 3/4	SC2E	C
		2	A471c	HSS 3x1 1/2x1/16	5	6	SC2E	TS
		4	A436f	PL 3/8x1 1/2	0	1 1/2	PASS THRU PL	PL
		2	A436g	HSS 4x2x1/16	0	8	SPLIT IN HALF	TS

BU-25 EAST 89TH STREET
100% COMPLETE 08-16-21

P.H. DREW INC.
2450 N. RACEWAY RD. - P.O. BOX 34295
INDIANAPOLIS, INDIANA 46234
PHONE : (317) 297-5152
FAX : (317) 297-5313

APPROVAL: APPROVED 08-03-21

CUY-IR490 / SR010-2.09 / 19.28

DECORATIVE FENCE

RAIL PANELS

REVISION

REV	DATE	DESCRIPTION	BY

STATE	OHIO
COUNTY	CUYAHOGA (CITY OF CLEVELAND)
PROJECT	3000 (17)
CONTRACT	PID 96833
SECTION	
STRUCTURE	
STATE JOB	

APPROVAL RECORD

DATE	ISSUED	APP DATE	APPROVAL STATUS
08-16-21	FABRICATION		

CUSTOMER	LAKE ERIE CONSTRUCTION COMPANY
CONTRACTOR	
ARCH/ENG	
REFERENCE	
ITEM	
FINISH	SEE NOTES - SHT E400

DRAWN BY	CHECKED BY	MRH NO	JOB MGR	DWG STATUS	JOB NO.	TOTAL SHEETS	SHEET
MRH 07-21-21	SRF 08-12-21	1914	JL	FABRICATION 08-16-21	19-1108		471A

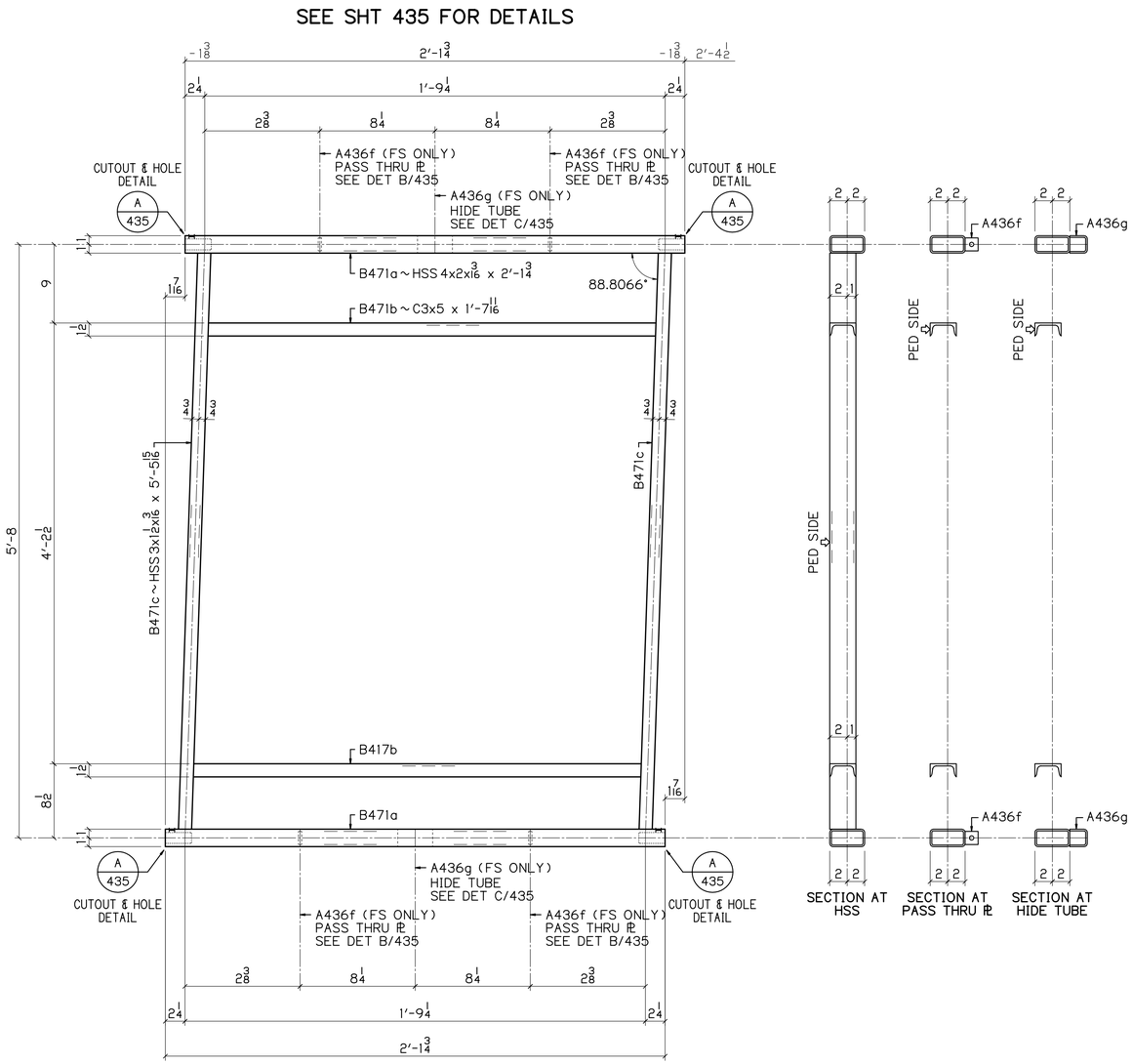

2 ~ B471

RAIL PANELS
PEDESTRIAN SIDE SHOWN

1.1934 1/4 / 12

UP

BILL OF MATERIAL

NO	MK	NO	SUBMK	MATERIAL	FT	IN	REMARKS	SORT
2	B471			RAIL PANELS				MM
		4	B471a	HSS 4x2x3/16	2	3/4	SC2E	TS
		4	B471b	C3x5	1	7 11/16	SC2E	C
		4	B471c	HSS 3x1 1/2x3/16	5	5 15/16	SC2E	TS
		8	A436f	PL 3/8x1 1/2	0	1 1/2	PASS THRU PL	PL
		4	A436g	HSS 4x2x3/16	0	8	SPLIT IN HALF	TS

BU-25 EAST 89TH STREET
100% COMPLETE 08-16-21

P.H. DREW INC.
2450 N. RACEWAY RD. - P.O. BOX 34295
INDIANAPOLIS, INDIANA 46234
PHONE : (317) 297-5152
FAX : (317) 297-5313

APPROVAL: APPROVED 08-03-21

CUY-IR490 / SR010-2.09 / 19.28

DECORATIVE FENCE

RAIL PANELS

REVISION	REV	DATE	DESCRIPTION	BY

APPROVAL RECORD	DATE	ISSUED	APP DATE	APPROVAL STATUS
	08-16-21	FABRICATION		

STATE	OHIO
COUNTY	CUYAHOGA (CITY OF CLEVELAND)
PROJECT	3000 (17)
CONTRACT	PID 96833
SECTION	
STRUCTURE	
STATE JOB	
CUSTOMER	LAKE ERIE CONSTRUCTION COMPANY
CONTRACTOR	
ARCH/ENG	
REFERENCE	
ITEM	
FINISH	SEE NOTES-SHT E400

DRAWN BY	CHECKED BY	MRH NO	JOB MGR	DWG STATUS	JOB NO.	TOTAL SHEETS	SHEET
MRH 07-21-21	SRF 08-12-21	1914	JL	FABRICATION 08-16-21	19-1108		471B

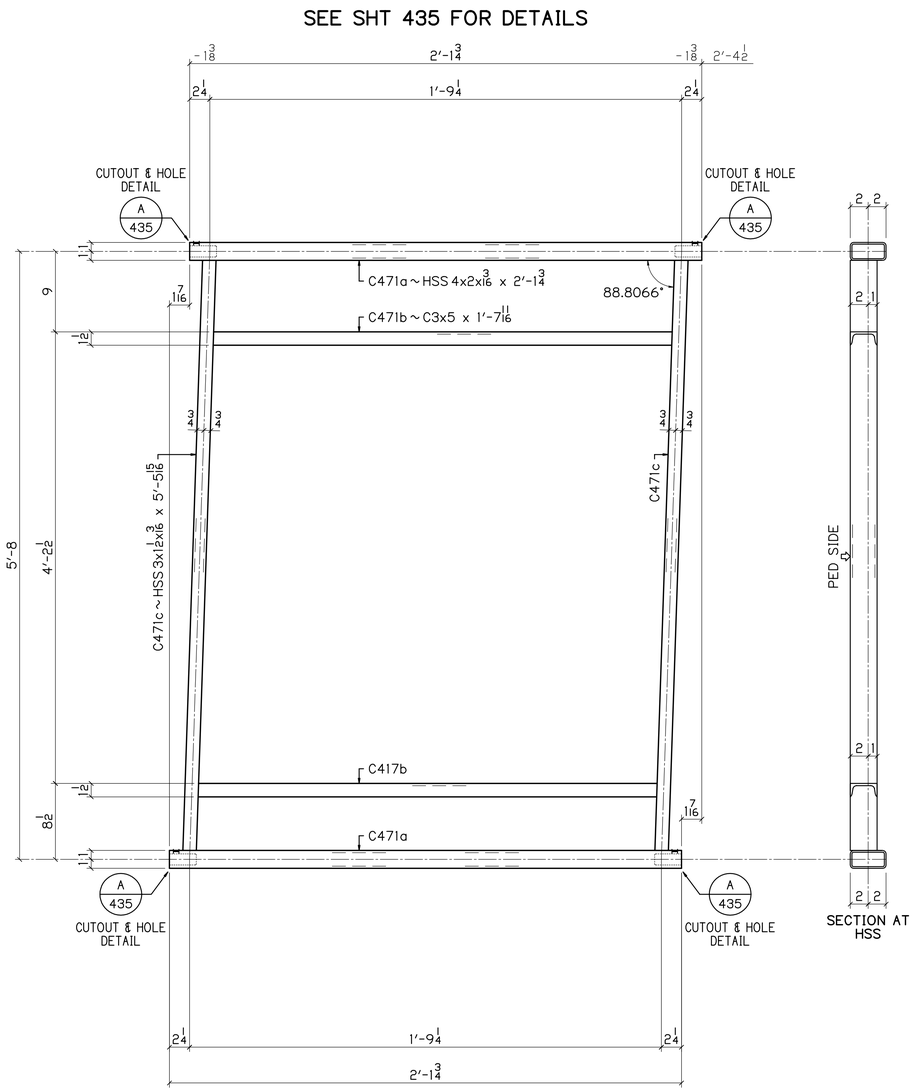

1 ~ C471

RAIL PANELS
PEDESTRIAN SIDE SHOWN

1.1934* / 12 1/4

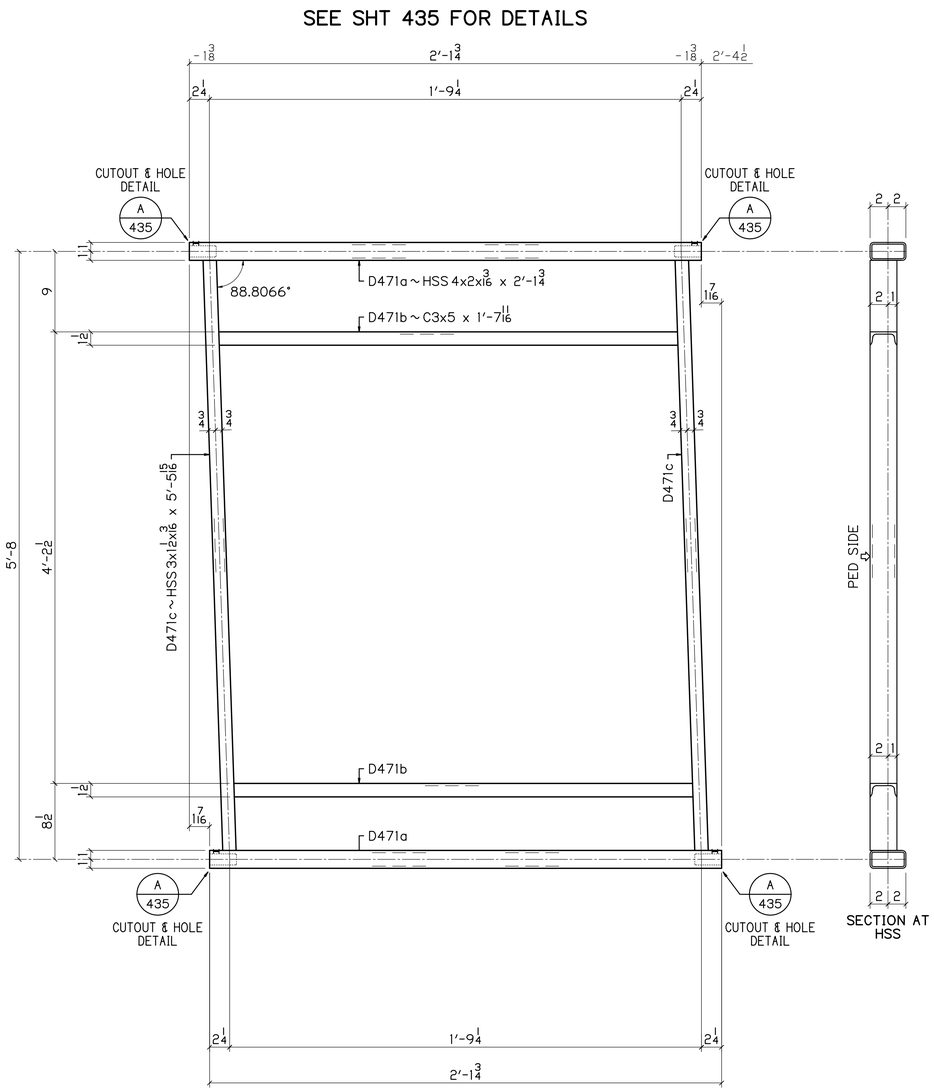

1 ~ D471

RAIL PANELS
PEDESTRIAN SIDE SHOWN

1/4 | 1.1934* / 12

UP

DN

BILL OF MATERIAL

NO	MK	NO	SUBMK	MATERIAL	FT	IN	REMARKS	SORT
1	C471			RAIL PANELS				MM
		2	C471a	HSS 4x2x3/16	2	1 3/4	SC2E	TS
		2	C471b	C3x5	1	7 11/16	SC2E	C
		2	C471c	HSS 3x1 1/2x3/16	5	5 15/16	SC2E	TS
1	D471			RAIL PANELS				MM
		2	D471a	HSS 4x2x3/16	2	1 3/4	SC2E	TS
		2	D471b	C3x5	1	7 11/16	SC2E	C
		2	D471c	HSS 3x1 1/2x3/16	5	5 15/16	SC2E	TS

BU-25 EAST 89TH STREET

100% COMPLETE 08-16-21

P.H. DREW INC.
2450 N. RACEWAY RD. - P.O. BOX 34295
INDIANAPOLIS, INDIANA 46234
PHONE : (317) 297-5152
FAX : (317) 297-5313

APPROVAL: APPROVED 08-03-21

CUY-IR490 / SR010-2.09 / 19.28

DECORATIVE FENCE

RAIL PANELS

REVISION

REV	DATE	DESCRIPTION	BY

STATE	OHIO
COUNTY	CUYAHOGA (CITY OF CLEVELAND)
PROJECT	3000 (17)
CONTRACT	PID 96833
SECTION	
STRUCTURE	
STATE JOB	

APPROVAL RECORD

DATE	ISSUED	APP DATE	APPROVAL STATUS
08-16-21	FABRICATION		

CUSTOMER	LAKE ERIE CONSTRUCTION COMPANY
CONTRACTOR	
ARCH/ENG	
REFERENCE	
ITEM	
FINISH	SEE NOTES-SHT E400

DRAWN BY	CHECKED BY	MRH NO	JOB MGR	DWG STATUS	JOB NO.	TOTAL SHEETS	SHEET
MRH 07-21-21	SRF 08-12-21	1914	JL	FABRICATION 08-16-21	19-1108		471B

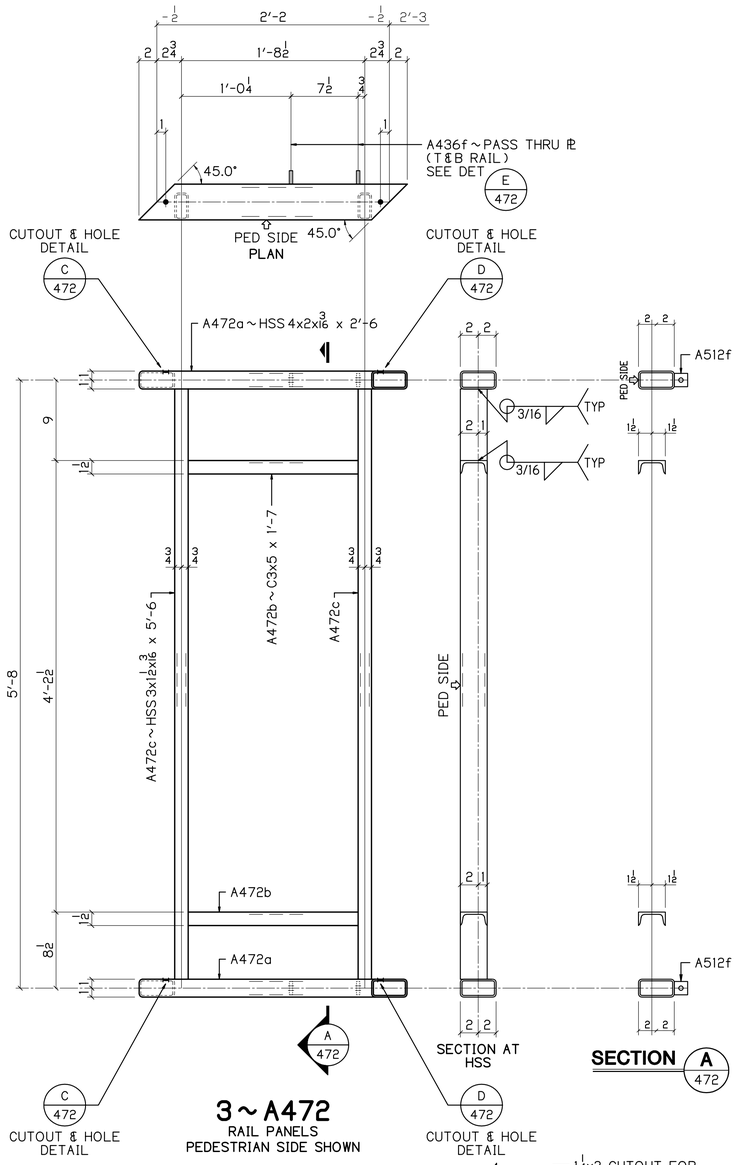

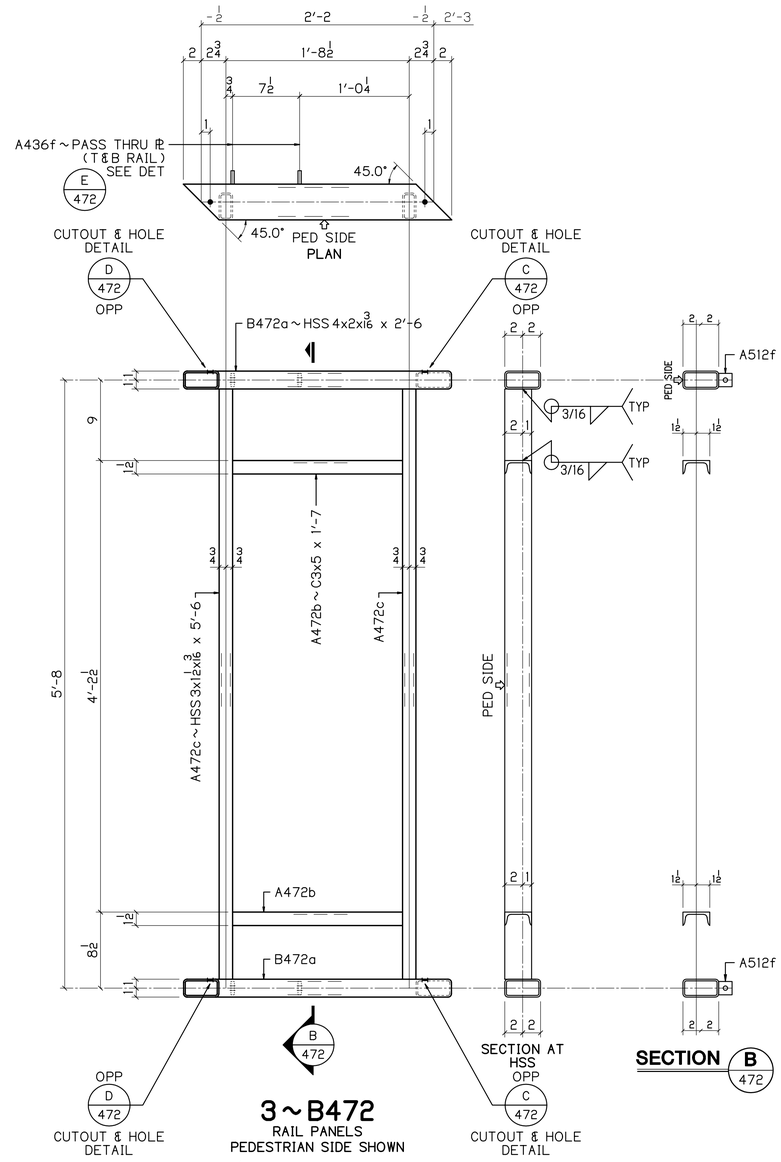

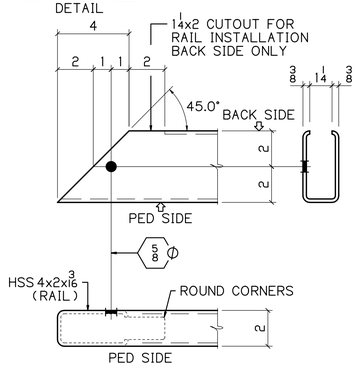

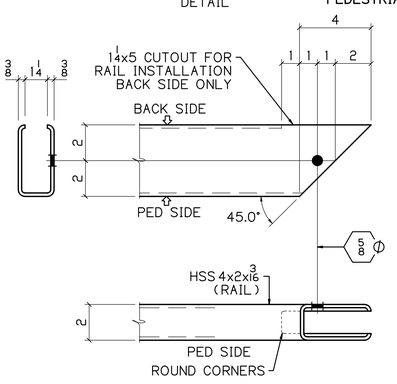

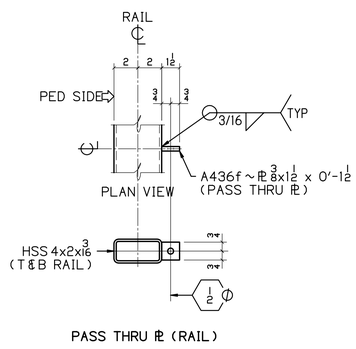

BILL OF MATERIAL

NO	MK	NO	SUBMK	MATERIAL	FT	IN	REMARKS	SORT
3	A472			RAIL PANELS				MM
		6	A472a	HSS 4x2x3/16	2	6	BC2E	TS
		6	A472b	C3x5	1	7	SC2E	C
		6	A472c	HSS 3x1 1/2x3/16	5	6	SC2E	TS
		12	A436f	PL 3/8x1 1/2	0	1 1/2	PASS THRU PL	PL
3	B472			RAIL PANELS				MM
		6	B472a	HSS 4x2x3/16	2	6	BC2E	TS
		6	A472b	C3x5	1	7	SC2E	C
		6	A472c	HSS 3x1 1/2x3/16	5	6	SC2E	TS
		12	A436f	PL 3/8x1 1/2	0	1 1/2	PASS THRU PL	PL

BU-25 EAST 89TH STREET

100% COMPLETE 08-16-21

P.H. DREW INC.
2450 N. RACEWAY RD. - P.O. BOX 34295
INDIANAPOLIS, INDIANA 46234
PHONE : (317) 297-5152
FAX : (317) 297-5313

APPROVAL: APPROVED 08-03-21

CUY-IR490 / SR010-2.09 / 19.28

DECORATIVE FENCE

RAIL PANELS

REVISION	REV	DATE	DESCRIPTION	BY

APPROVAL RECORD	DATE	ISSUED	APP DATE	APPROVAL STATUS
	08-16-21	FABRICATION		

STATE	OHIO
COUNTY	CUYAHOGA (CITY OF CLEVELAND)
PROJECT	3000 (17)
CONTRACT	PID 96833
SECTION	
STRUCTURE	
STATE JOB	
CUSTOMER	LAKE ERIE CONSTRUCTION COMPANY
CONTRACTOR	
ARCH/ENG	
REFERENCE	
ITEM	
FINISH	SEE NOTES - SHT E400

DRAWN BY	CHECKED BY	MRH NO	JOB MGR	DWG STATUS	JOB NO.	TOTAL SHEETS	SHEET
MRH 07-21-21	SRF 08-12-21	1914	JL	FABRICATION 08-16-21	19-1108		472

SEE SHT 435 FOR DETAILS

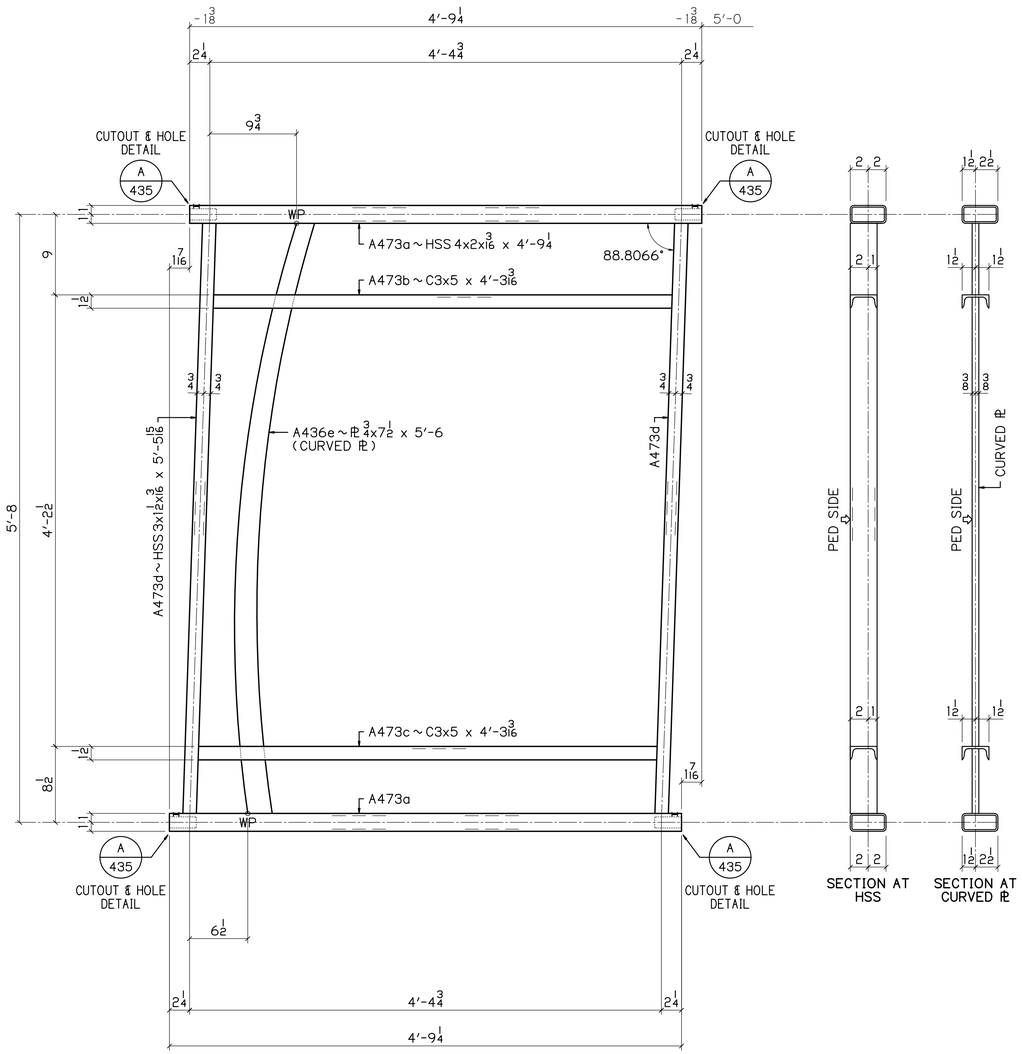

2 ~ A473

RAIL PANELS

PEDESTRIAN SIDE SHOWN

1.1934 1/4 / 12

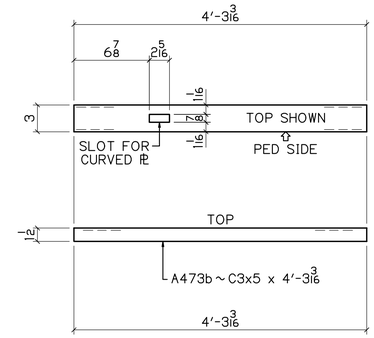

DETAIL OF A473b

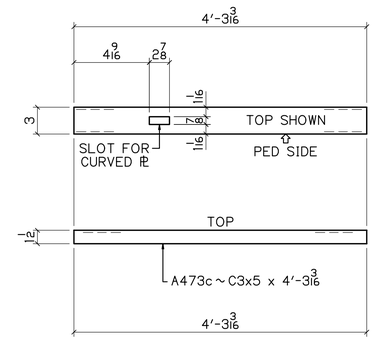

DETAIL OF A473c

UP

BILL OF MATERIAL

NO	MK	NO	SUBMK	MATERIAL	FT	IN	REMARKS	SORT
2	A473			RAIL PANELS				MM
		4	A473a	HSS 4x2x3/16	4	9 1/4	SC2E	TS
		2	A473b	C3x5	4	3 3/16	SC2E	C
		2	A473c	C3x5	4	3 3/16	SC2E	C
		4	A473d	HSS 3x1 1/2x3/16	5	5 15/16	SC2E	TS
		2	A436e	PL 3/4x7 1/2	5	6	CURVED PL	PL

BU-19 BLUE-GREEN LINES

100% COMPLETE 08-16-21

P.H. DREW INC.
2450 N. RACEWAY RD. - P.O. BOX 34295
INDIANAPOLIS, INDIANA 46234
PHONE : (317) 297-5152
FAX : (317) 297-5313

APPROVAL: APPROVED 08-03-21

CUY-IR490 / SR010-2.09 / 19.28

DECORATIVE FENCE

RAIL PANELS

REVISION	REV	DATE	DESCRIPTION	BY

APPROVAL RECORD	DATE	ISSUED	APP DATE	APPROVAL STATUS
	08-16-21	FABRICATION		

STATE	OHIO
COUNTY	CUYAHOGA (CITY OF CLEVELAND)
PROJECT	3000 (17)
CONTRACT	PID 96833
SECTION	
STRUCTURE	
STATE JOB	
CUSTOMER	LAKE ERIE CONSTRUCTION COMPANY
CONTRACTOR	
ARCH/ENG	
REFERENCE	
ITEM	
FINISH	SEE NOTES - SHT E400

DRAWN BY	CHECKED BY	MRH NO	JOB MGR	DWG STATUS	JOB NO.	TOTAL SHEETS	SHEET
MRH 07-21-21	SRF 08-12-21	1914	JL	FABRICATION 08-16-21	19-1108		473

SEE SHT 435 FOR DETAILS

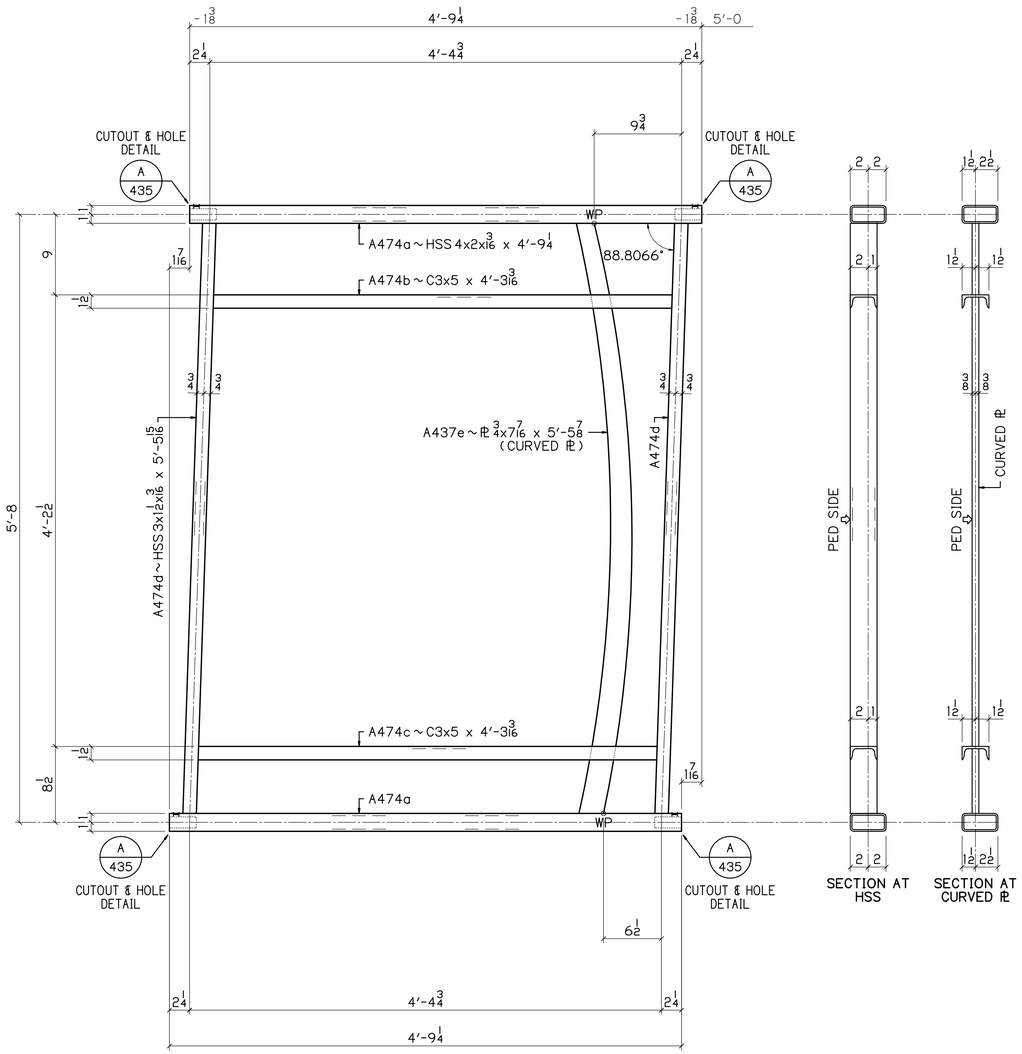

2 ~ A474

RAIL PANELS

PEDESTRIAN SIDE SHOWN

1.1934 1/4 / 12

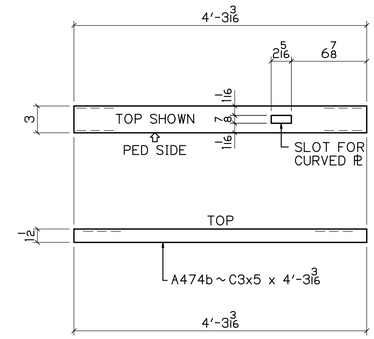

DETAIL OF A474b

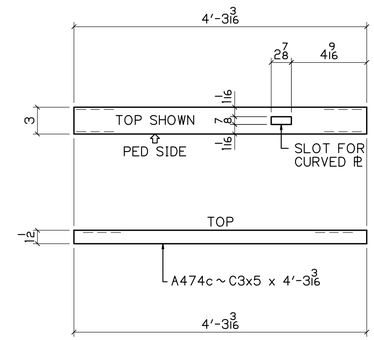

DETAIL OF A474c

UP

BILL OF MATERIAL

NO	MK	NO	SUBMK	MATERIAL	FT	IN	REMARKS	SORT
2	A474			RAIL PANELS				MM
		4	A474a	HSS 4x2x3/16	4	9 1/4	SC2E	TS
		2	A474b	C3x5	4	3 3/16	SC2E	C
		2	A474c	C3x5	4	3 3/16	SC2E	C
		4	A474d	HSS 3x1 1/2x3/16	5	5 15/16	SC2E	TS
		2	A437e	PL 3/4x7/16	5	5 7/8	CURVED PL	PL

BU-19 BLUE-GREEN LINES

100% COMPLETE 08-16-21

P.H. DREW INC.
2450 N. RACEWAY RD. - P.O. BOX 34295
INDIANAPOLIS, INDIANA 46234
PHONE : (317) 297-5152
FAX : (317) 297-5313

APPROVAL: APPROVED 08-03-21

CUY-IR490 / SR010-2.09 / 19.28

DECORATIVE FENCE

RAIL PANELS

REVISION	REV	DATE	DESCRIPTION	BY

APPROVAL RECORD	DATE	ISSUED	APP DATE	APPROVAL STATUS
	08-16-21	FABRICATION		

STATE	OHIO
COUNTY	CUYAHOGA (CITY OF CLEVELAND)
PROJECT	3000 (17)
CONTRACT	PID 96833
SECTION	
STRUCTURE	
STATE JOB	
CUSTOMER	LAKE ERIE CONSTRUCTION COMPANY
CONTRACTOR	
ARCH/ENG	
REFERENCE	
ITEM	
FINISH	SEE NOTES - SHT E400

DRAWN BY	CHECKED BY	MRH NO	JOB MGR	DWG STATUS	JOB NO.	TOTAL SHEETS	SHEET
MRH 07-21-21	SRF 08-12-21	1914	JL	FABRICATION 08-16-21	19-1108		474

SEE SHT 435 FOR DETAILS

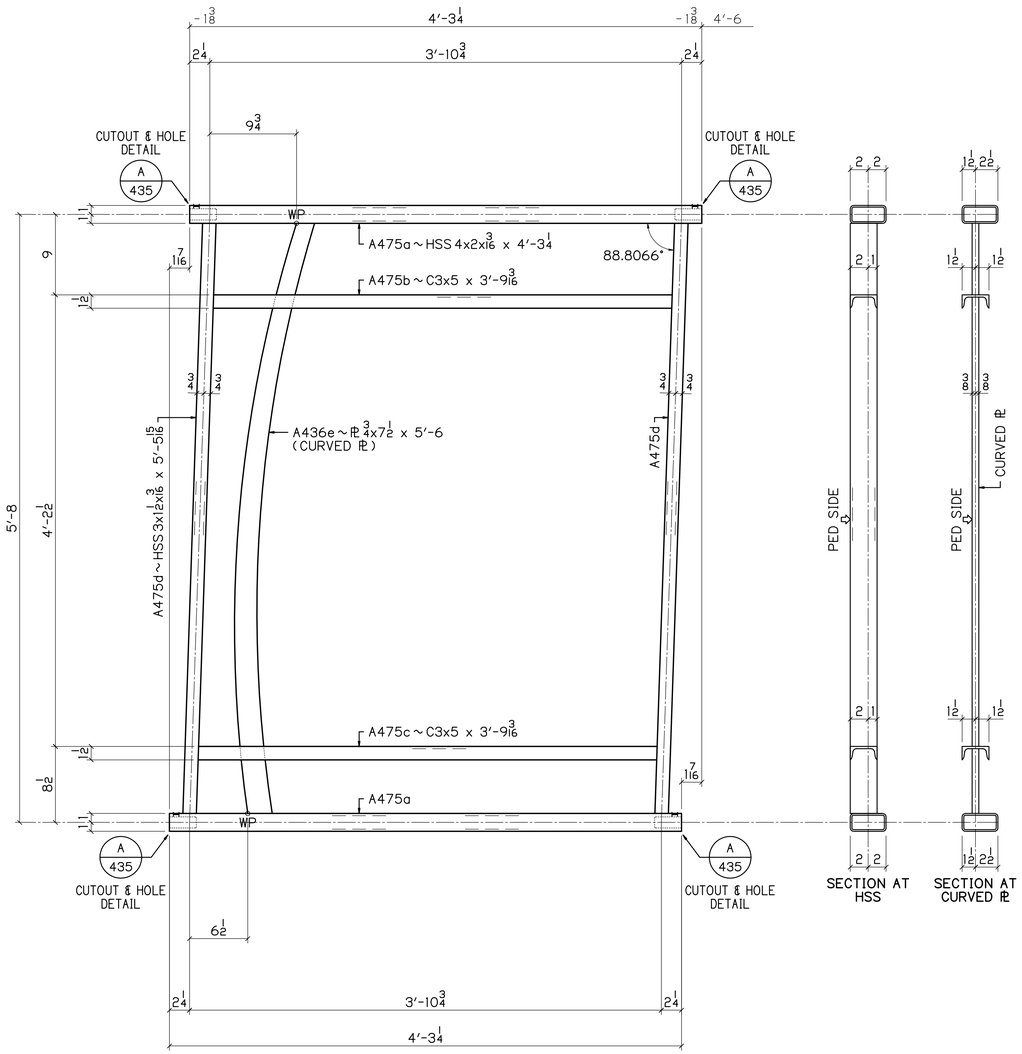

1 ~ A475

RAIL PANELS
PEDESTRIAN SIDE SHOWN

1.1934 1 1/4 / 12

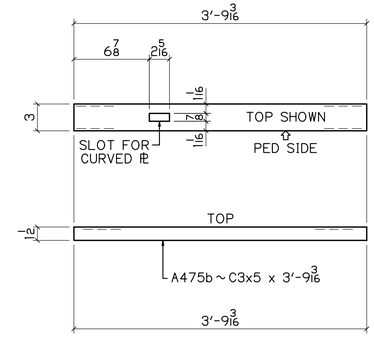

DETAIL OF A475b

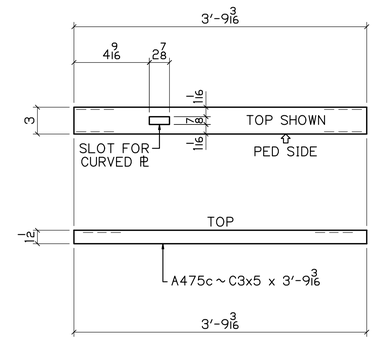

DETAIL OF A475c

UP

BILL OF MATERIAL

NO	MK	NO	SUBMK	MATERIAL	FT	IN	REMARKS	SORT
1	A475			RAIL PANELS				MM
		2	A475a	HSS 4x2x3/16	4	3 1/4	SC2E	TS
		1	A475b	C3x5	3	9 3/16	SC2E	C
		1	A475c	C3x5	3	9 3/16	SC2E	C
		2	A475d	HSS 3x1 1/2x3/16	5	5 15/16	SC2E	TS
		1	A436e	PL 3/4x7 1/2	5	6	CURVED PL	PL

BU-19 BLUE-GREEN LINES
100% COMPLETE 08-16-21

P.H. DREW INC.
2450 N. RACEWAY RD. - P.O. BOX 34295
INDIANAPOLIS, INDIANA 46234
PHONE : (317) 297-5152
FAX : (317) 297-5313

APPROVAL: APPROVED 08-03-21

CUY-IR490 / SR010-2.09 / 19.28
DECORATIVE FENCE
RAIL PANELS

REVISION REV	DATE	DESCRIPTION	BY

APPROVAL RECORD DATE	ISSUED	APP DATE	APPROVAL STATUS
08-16-21	FABRICATION		

STATE	OHIO
COUNTY	CUYAHOGA (CITY OF CLEVELAND)
PROJECT	3000 (17)
CONTRACT	PID 96833
SECTION	
STRUCTURE	
STATE JOB	
CUSTOMER	LAKE ERIE CONSTRUCTION COMPANY
CONTRACTOR	
ARCH/ENG	
REFERENCE	
ITEM	
FINISH	SEE NOTES - SHT E400

DRAWN BY	CHECKED BY	MRH NO	JOB MGR	DWG STATUS	JOB NO.	TOTAL SHEETS	SHEET
MRH 07-21-21	SRF 08-12-21	1914	JL	FABRICATION 08-16-21	19-1108		475

SEE SHT 435 FOR DETAILS

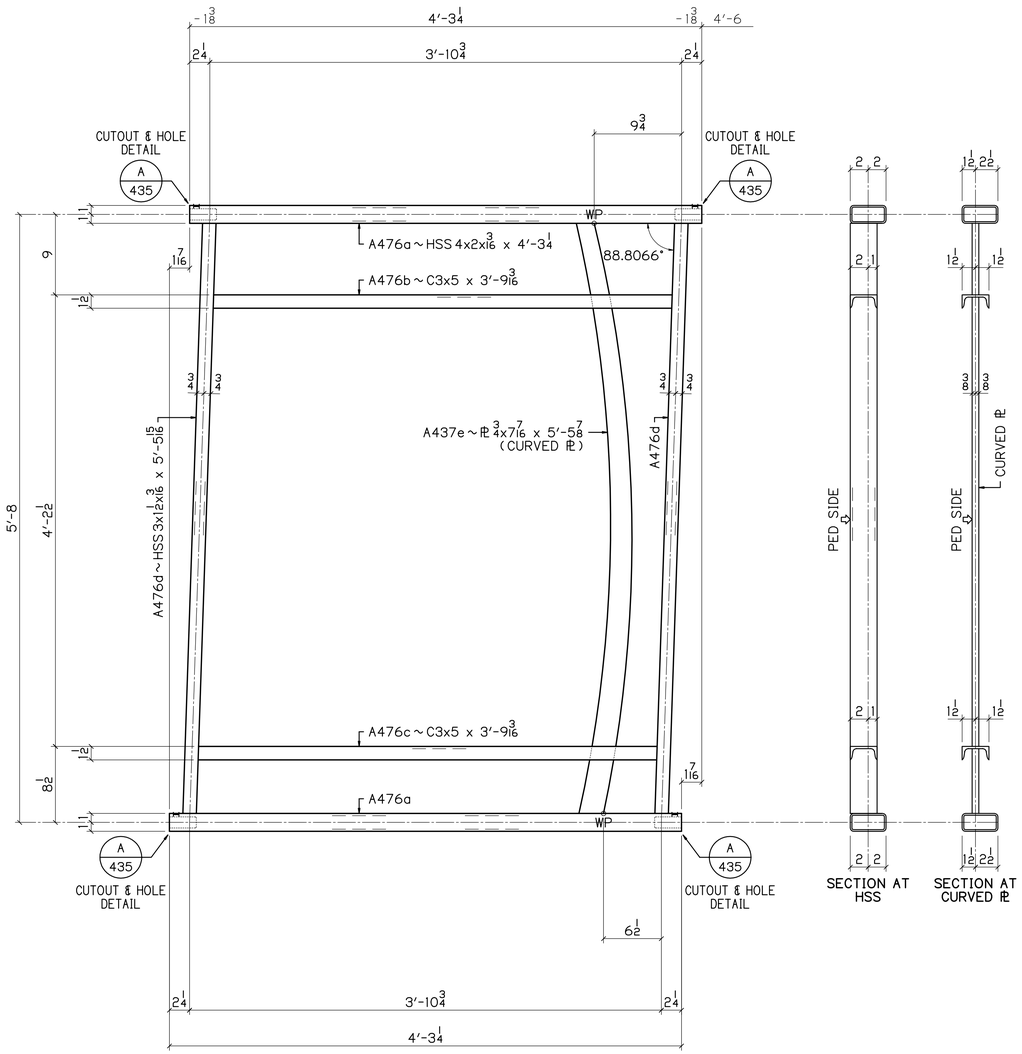

1 ~ A476
RAIL PANELS
PEDESTRIAN SIDE SHOWN

1.1934 1/4 / 12

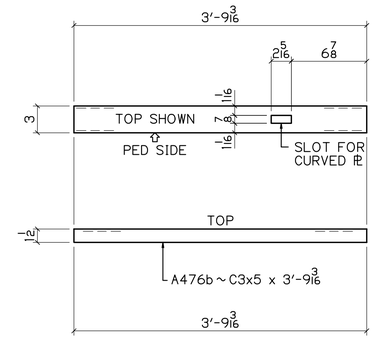

DETAIL OF A476b

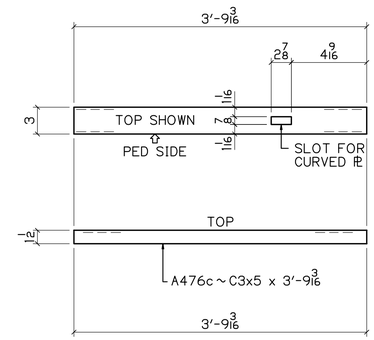

DETAIL OF A476c

UP

BILL OF MATERIAL

NO	MK	NO	SUBMK	MATERIAL	FT	IN	REMARKS	SORT
1	A476			RAIL PANELS				MM
		2	A476a	HSS 4x2x3/16	4	3 1/4	SC2E	TS
		1	A476b	C3x5	3	9 3/16	SC2E	C
		1	A476c	C3x5	3	9 3/16	SC2E	C
		2	A476d	HSS 3x1 1/2x3/16	5	5 15/16	SC2E	TS
		1	A437e	PL 3/4x7/16	5	5 7/8	CURVED PL	PL

BU-19 BLUE-GREEN LINES
100% COMPLETE 08-16-21

P.H. DREW INC.
2450 N. RACEWAY RD. - P.O. BOX 34295
INDIANAPOLIS, INDIANA 46234
PHONE : (317) 297-5152
FAX : (317) 297-5313

APPROVAL
APPROVED 08-03-21

CUY-IR490 / SR010-2.09 / 19.28

DECORATIVE FENCE

RAIL PANELS

REVISION	REV	DATE	DESCRIPTION	BY

APPROVAL RECORD	DATE	ISSUED	APP DATE	APPROVAL STATUS
	08-16-21	FABRICATION		

STATE	OHIO
COUNTY	CUYAHOGA (CITY OF CLEVELAND)
PROJECT	3000 (17)
CONTRACT	PID 96833
SECTION	
STRUCTURE	
STATE JOB	
CUSTOMER	LAKE ERIE CONSTRUCTION COMPANY
CONTRACTOR	
ARCH/ENG	
REFERENCE	
ITEM	
FINISH	SEE NOTES - SHT E400

DRAWN BY	CHECKED BY	MRH NO	JOB MGR	DWG STATUS	JOB NO.	TOTAL SHEETS	SHEET
MRH 07-21-21	SRF 08-12-21	1914	JL	FABRICATION 08-16-21	19-1108		476

SEE SHT 435 FOR DETAILS

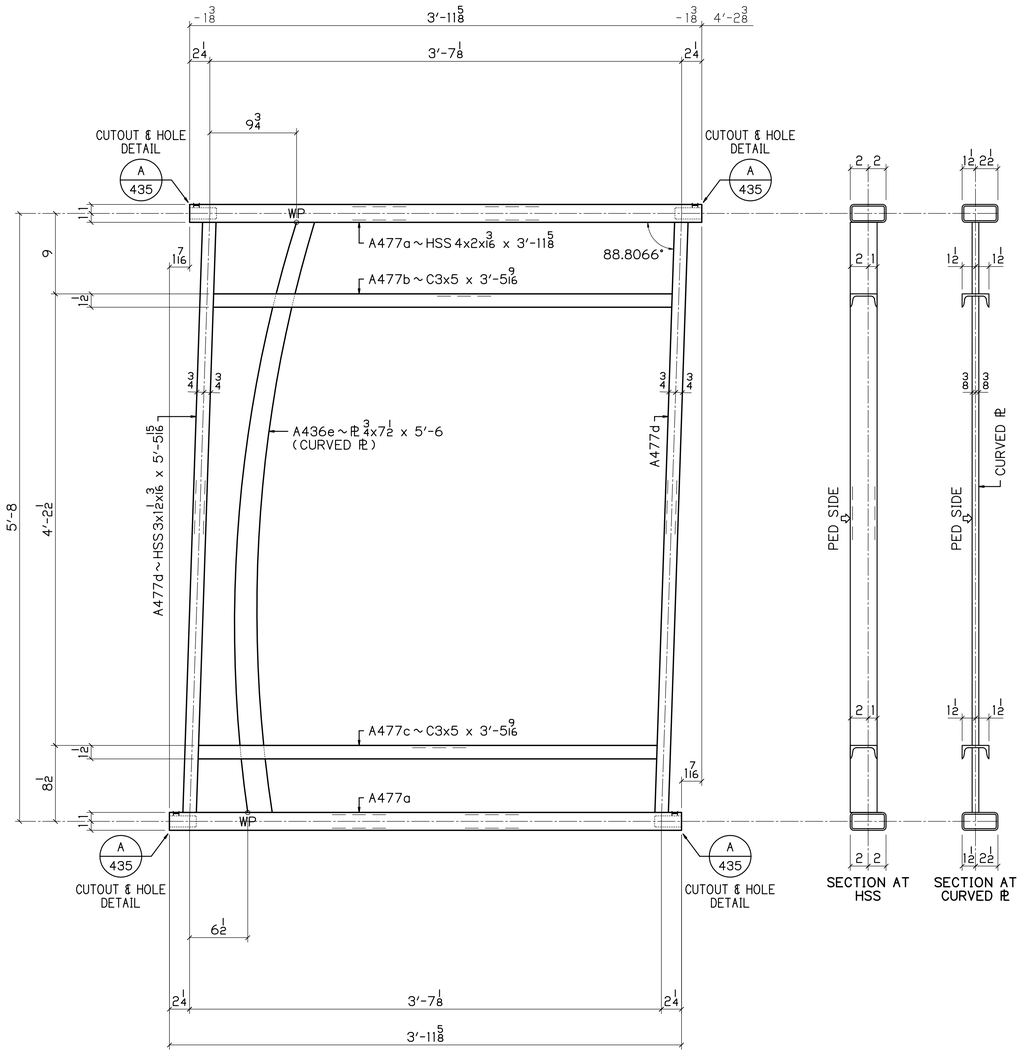

1 ~ A477

RAIL PANELS
PEDESTRIAN SIDE SHOWN

1.1934 1 1/4 / 12

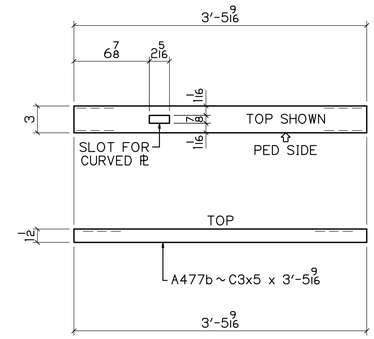

DETAIL OF A477b

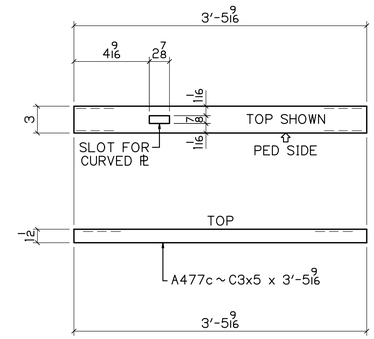

DETAIL OF A477c

UP

BILL OF MATERIAL

NO	MK	NO	SUBMK	MATERIAL	FT	IN	REMARKS	SORT
1	A477			RAIL PANELS				MM
		2	A477a	HSS 4x2x3/16	3	11 5/8	SC2E	TS
		1	A477b	C3x5	3	5 9/16	SC2E	C
		1	A477c	C3x5	3	5 9/16	SC2E	C
		2	A477d	HSS 3x1 1/2x3/16	5	5 15/16	SC2E	TS
		1	A436e	PL 3/4x7 1/2	5	6	CURVED PL	PL

BU-19 BLUE-GREEN LINES
100% COMPLETE 08-16-21

P.H. DREW INC.
2450 N. RACEWAY RD. - P.O. BOX 34295
INDIANAPOLIS, INDIANA 46234
PHONE : (317) 297-5152
FAX : (317) 297-5313

APPROVAL: APPROVED 08-03-21

CUY-IR490 / SR010-2.09 / 19.28

DECORATIVE FENCE

RAIL PANELS

REVISION REV	DATE	DESCRIPTION	BY

APPROVAL RECORD DATE	ISSUED	APP DATE	APPROVAL STATUS
08-16-21	FABRICATION		

STATE	OHIO
COUNTY	CUYAHOGA (CITY OF CLEVELAND)
PROJECT	3000 (17)
CONTRACT	PID 96833
SECTION	
STRUCTURE	
STATE JOB	
CUSTOMER	LAKE ERIE CONSTRUCTION COMPANY
CONTRACTOR	
ARCH/ENG	
REFERENCE	
ITEM	
FINISH	SEE NOTES - SHT E400

DRAWN BY	CHECKED BY	MRH NO	JOB MGR	DWG STATUS	JOB NO.	TOTAL SHEETS	SHEET
MRH 07-21-21	SRF 08-12-21	1914	JL	FABRICATION 08-16-21	19-1108		477

SEE SHT 435 FOR DETAILS

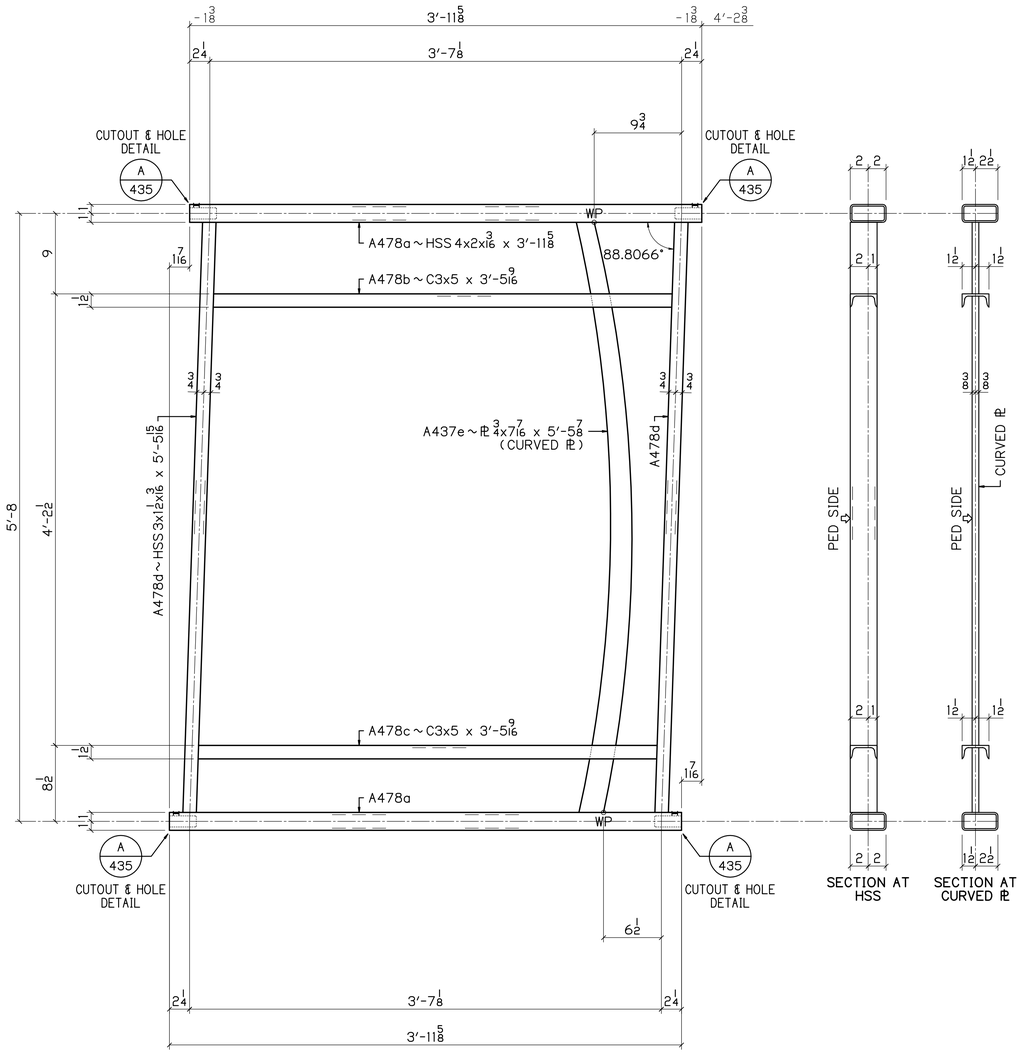

1 ~ A478

RAIL PANELS
PEDESTRIAN SIDE SHOWN

1.1934 1/4 / 12

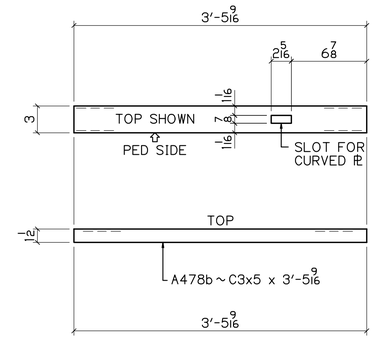

DETAIL OF A478b

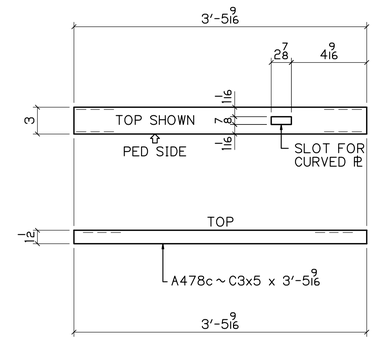

DETAIL OF A478c

UP

BILL OF MATERIAL

NO	MK	NO	SUBMK	MATERIAL	FT	IN	REMARKS	SORT
1	A478			RAIL PANELS				MM
		2	A478a	HSS 4x2x3/16	3	11 5/8	SC2E	TS
		1	A478b	C3x5	3	5 9/16	SC2E	C
		1	A478c	C3x5	3	5 9/16	SC2E	C
		2	A478d	HSS 3x1 1/2x3/16	5	5 15/16	SC2E	TS
		1	A437e	PL 3/4x7/16	5	5 7/8	CURVED PL	PL

BU-19 BLUE-GREEN LINES
100% COMPLETE 08-16-21

P.H. DREW INC.
2450 N. RACEWAY RD. - P.O. BOX 34295
INDIANAPOLIS, INDIANA 46234
PHONE : (317) 297-5152
FAX : (317) 297-5313

APPROVAL: APPROVED 08-03-21

CUY-IR490 / SR010-2.09 / 19.28

DECORATIVE FENCE

RAIL PANELS

REVISION

REV	DATE	DESCRIPTION	BY

APPROVAL RECORD

DATE	ISSUED	APP DATE	APPROVAL STATUS
08-16-21	FABRICATION		

STATE	OHIO
COUNTY	CUYAHOGA (CITY OF CLEVELAND)
PROJECT	3000 (17)
CONTRACT	PID 96833
SECTION	
STRUCTURE	
STATE JOB	
CUSTOMER	LAKE ERIE CONSTRUCTION COMPANY
CONTRACTOR	
ARCH/ENG	
REFERENCE	
ITEM	
FINISH	SEE NOTES - SHT E400

DRAWN BY	CHECKED BY	MRH NO	JOB MGR	DWG STATUS	JOB NO.	TOTAL SHEETS	SHEET
MRH 07-21-21	SRF 08-12-21	1914	JL	FABRICATION 08-16-21	19-1108		478

SEE SHT 435 FOR DETAILS

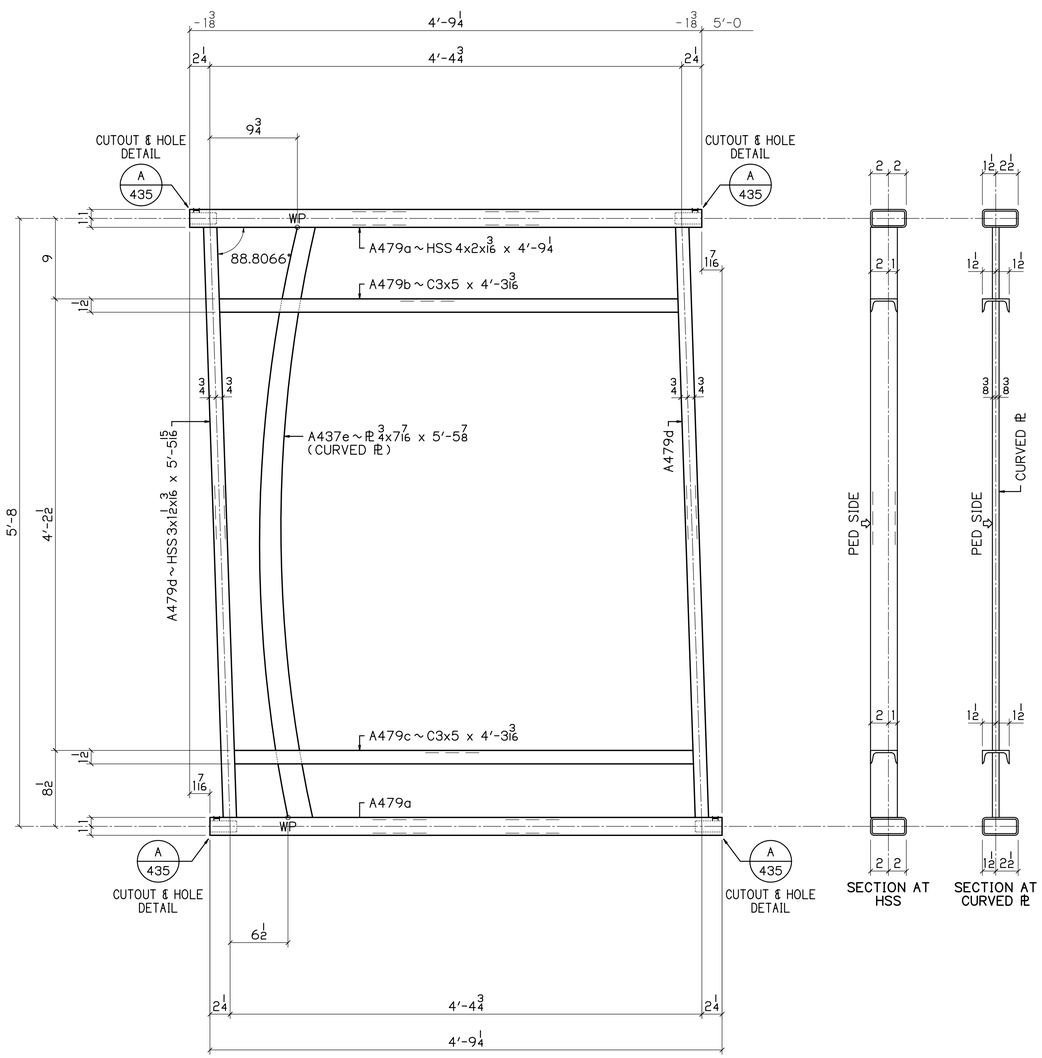

3 ~ A479

RAIL PANELS
PEDESTRIAN SIDE SHOWN

1/4 | 1.1934* / 12

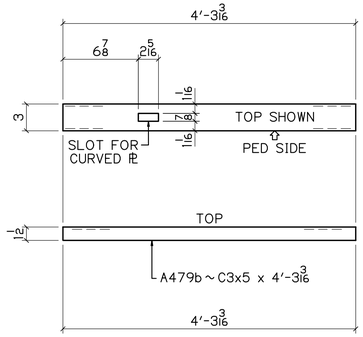

DETAIL OF A479b

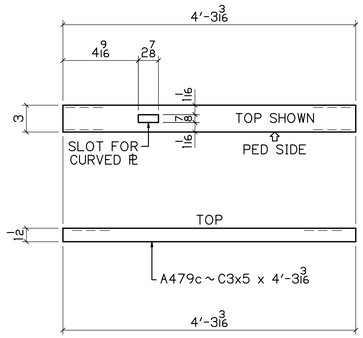

DETAIL OF A479c

BILL OF MATERIAL

NO	MK	NO	SUBMK	MATERIAL	FT	IN	REMARKS	SORT
3	A479			RAIL PANELS				MM
		6	A479a	HSS 4x2x3/16	4	9 1/4	SC2E	TS
		3	A479b	C3x5	4	3 3/16	SC2E	C
		3	A479c	C3x5	4	3 3/16	SC2E	C
		6	A479d	HSS 3x1 1/2x3/16	5	5 15/16	SC2E	TS
		3	A437e	PL 3/4x7/16	5	5 7/8	CURVED PL	PL

BU-19 BLUE-GREEN LINES
100% COMPLETE 08-16-21

P.H. DREW INC.
2450 N. RACEWAY RD. - P.O. BOX 34295
INDIANAPOLIS, INDIANA 46234
PHONE : (317) 297-5152
FAX : (317) 297-5313

APPROVAL: APPROVED 08-03-21

CUY-IR490 / SR010-2.09 / 19.28

DECORATIVE FENCE

RAIL PANELS

REVISION

REV	DATE	DESCRIPTION	BY

STATE	OHIO
COUNTY	CUYAHOGA (CITY OF CLEVELAND)
PROJECT	3000 (17)
CONTRACT	PID 96833
SECTION	
STRUCTURE	
STATE JOB	

APPROVAL RECORD

DATE	ISSUED	APP DATE	APPROVAL STATUS
08-16-21	FABRICATION		

CUSTOMER	LAKE ERIE CONSTRUCTION COMPANY
CONTRACTOR	
ARCH/ENG	
REFERENCE	
ITEM	
FINISH	SEE NOTES - SHT E400

DRAWN BY	CHECKED BY	MRH NO	JOB MGR	DWG STATUS	JOB NO.	TOTAL SHEETS	SHEET
MRH 07-21-21	SRF 08-12-21	1914	JL	FABRICATION 08-16-21	19-1108		479

DN

SEE SHT 435 FOR DETAILS

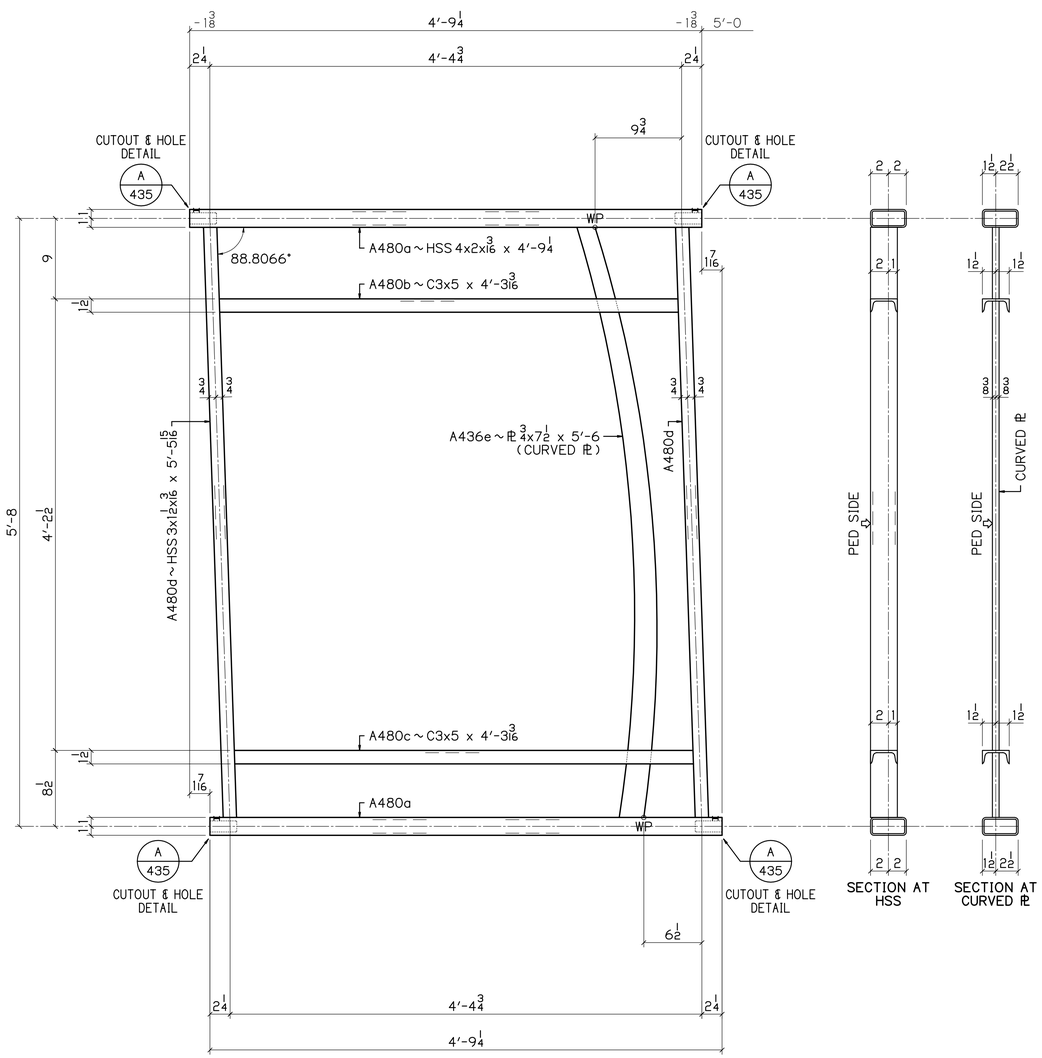

3 ~ A480

RAIL PANELS
PEDESTRIAN SIDE SHOWN

1/4 | 1.1934* / 12

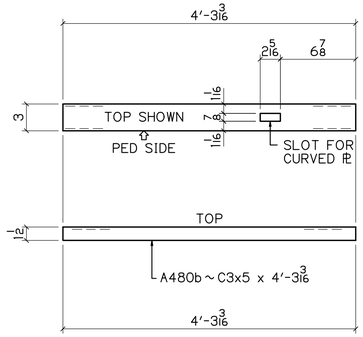

DETAIL OF A480b

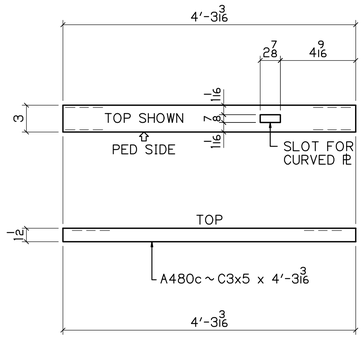

DETAIL OF A480c

BILL OF MATERIAL

NO	MK	NO	SUBMK	MATERIAL	FT	IN	REMARKS	SORT
3	A480			RAIL PANELS				MM
		6	A480a	HSS 4x2x3/16	4	9 1/4	SC2E	TS
		3	A480b	C3x5	4	3 3/16	SC2E	C
		3	A480c	C3x5	4	3 3/16	SC2E	C
		6	A480d	HSS 3x1 1/2x3/16	5	5 15/16	SC2E	TS
		3	A436e	PL 3/4x7 1/2	5	6	CURVED PL	PL

BU-19 BLUE-GREEN LINES
100% COMPLETE 08-16-21

P.H. DREW INC.
2450 N. RACEWAY RD. - P.O. BOX 34295
INDIANAPOLIS, INDIANA 46234
PHONE : (317) 297-5152
FAX : (317) 297-5313

APPROVAL: APPROVED 08-03-21

CUY-IR490 / SR010-2.09 / 19.28

DECORATIVE FENCE

RAIL PANELS

REVISION

REV	DATE	DESCRIPTION	BY

STATE	OHIO
COUNTY	CUYAHOGA (CITY OF CLEVELAND)
PROJECT	3000 (17)
CONTRACT	PID 96833
SECTION	
STRUCTURE	
STATE JOB	

APPROVAL RECORD

DATE	ISSUED	APP DATE	APPROVAL STATUS
08-16-21	FABRICATION		

CUSTOMER	LAKE ERIE CONSTRUCTION COMPANY
CONTRACTOR	
ARCH/ENG	
REFERENCE	
ITEM	
FINISH	SEE NOTES - SHT E400

DRAWN BY	CHECKED BY	MRH NO	JOB MGR	DWG STATUS	JOB NO.	TOTAL SHEETS	SHEET
MRH 07-21-21	SRF 08-12-21	1914	JL	FABRICATION 08-16-21	19-1108		480

DN

SEE SHT 435 FOR DETAILS

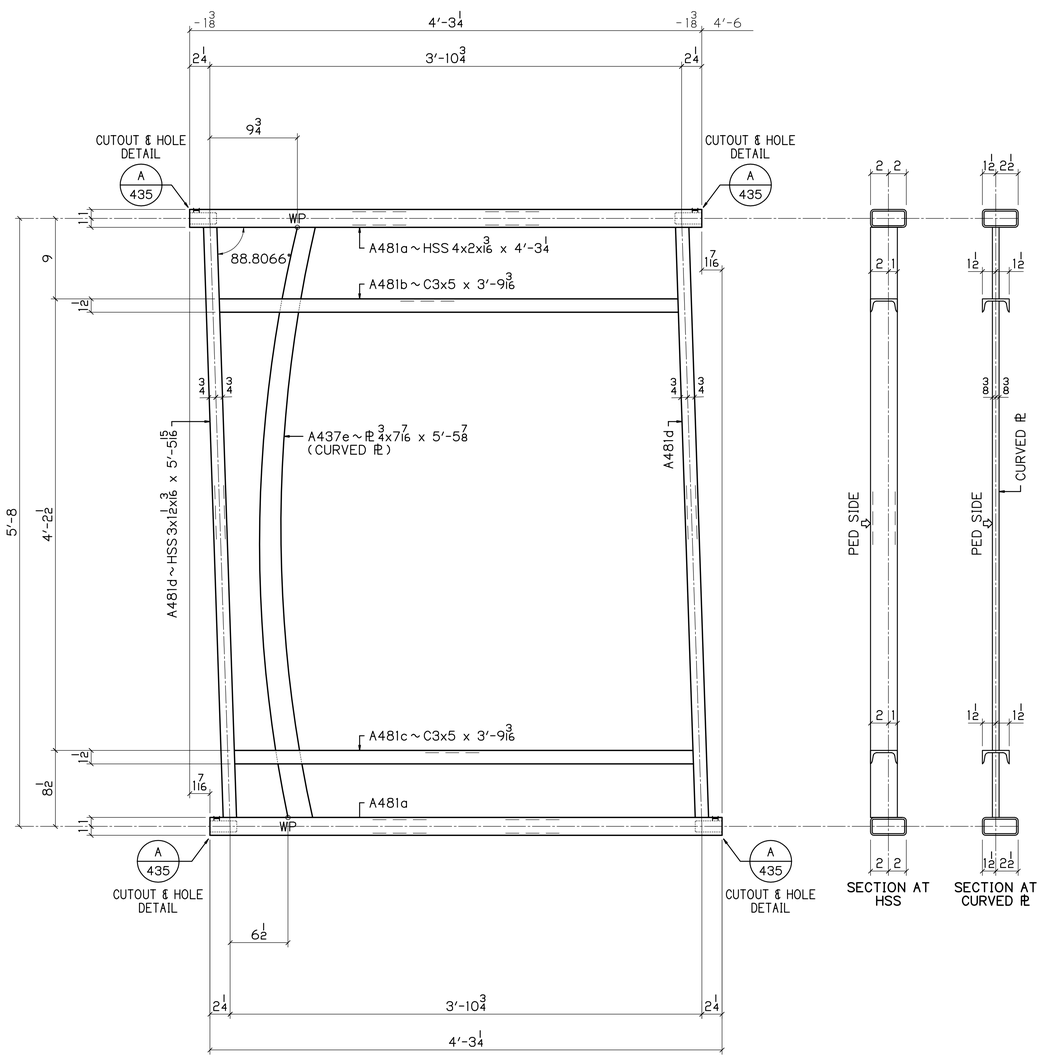

1 ~ A481

RAIL PANELS
PEDESTRIAN SIDE SHOWN

1/4 | 1.1934* / 12

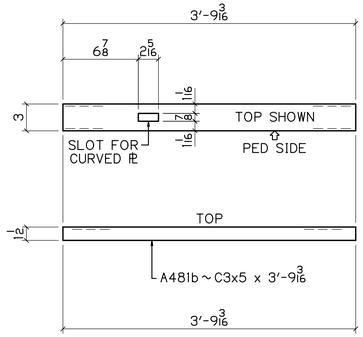

DETAIL OF A481b

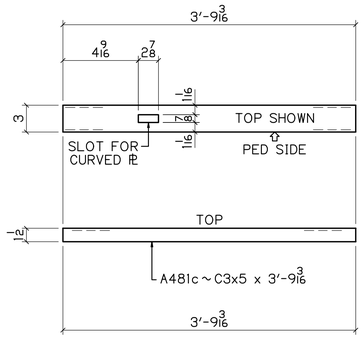

DETAIL OF A481c

BILL OF MATERIAL

NO	MK	NO	SUBMK	MATERIAL	FT	IN	REMARKS	SORT
1	A481			RAIL PANELS				MM
		2	A481a	HSS 4x2x3/16	4	3 1/4	SC2E	TS
		1	A481b	C3x5	3	9 3/16	SC2E	C
		1	A481c	C3x5	3	9 3/16	SC2E	C
		2	A481d	HSS 3x1 1/2x3/16	5	5 15/16	SC2E	TS
		1	A437e	PL 3/4x7/16	5	5 7/8	CURVED PL	PL

BU-19 BLUE-GREEN LINES
100% COMPLETE 08-16-21

P.H. DREW INC.
2450 N. RACEWAY RD. - P.O. BOX 34295
INDIANAPOLIS, INDIANA 46234
PHONE : (317) 297-5152
FAX : (317) 297-5313

APPROVAL: APPROVED 08-03-21

CUY-IR490 / SR010-2.09 / 19.28

DECORATIVE FENCE

RAIL PANELS

REVISION

REV	DATE	DESCRIPTION	BY

STATE	OHIO
COUNTY	CUYAHOGA (CITY OF CLEVELAND)
PROJECT	3000 (17)
CONTRACT	PID 96833
SECTION	
STRUCTURE	
STATE JOB	

APPROVAL RECORD

DATE	ISSUED	APP DATE	APPROVAL STATUS
08-16-21	FABRICATION		

CUSTOMER	LAKE ERIE CONSTRUCTION COMPANY
CONTRACTOR	
ARCH/ENG	
REFERENCE	
ITEM	
FINISH	SEE NOTES - SHT E400

DRAWN BY	CHECKED BY	MRH NO	JOB MGR	DWG STATUS	JOB NO.	TOTAL SHEETS	SHEET
MRH 07-21-21	SRF 08-12-21	1914	JL	FABRICATION 08-16-21	19-1108		481

DN

SEE SHT 435 FOR DETAILS

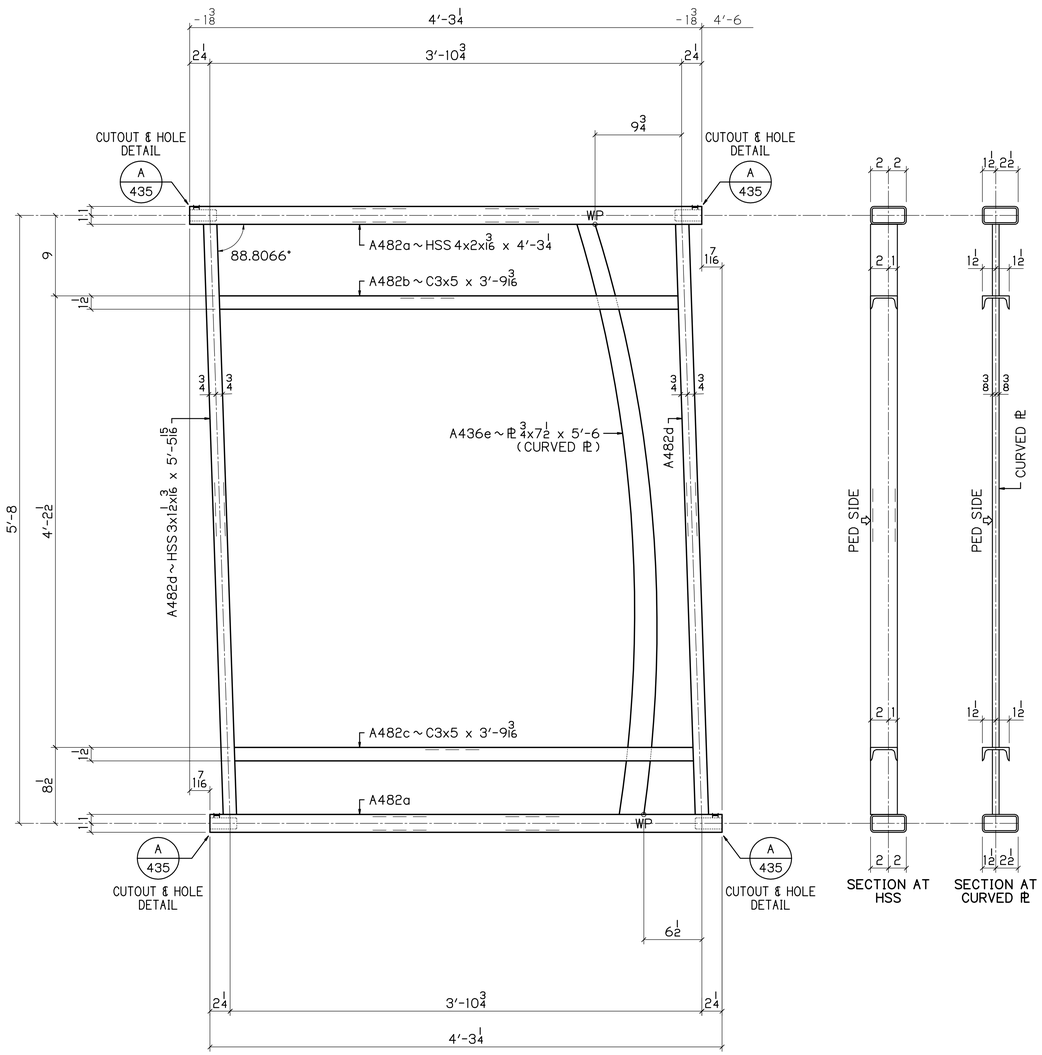

1 ~ A482
RAIL PANELS
PEDESTRIAN SIDE SHOWN

1/4 | 1.1934" / 12

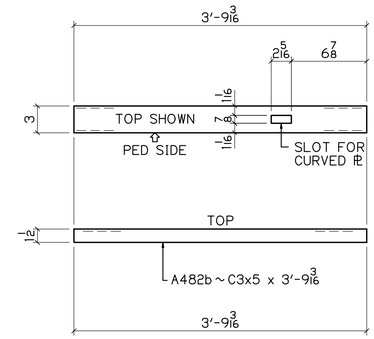

DETAIL OF A482b

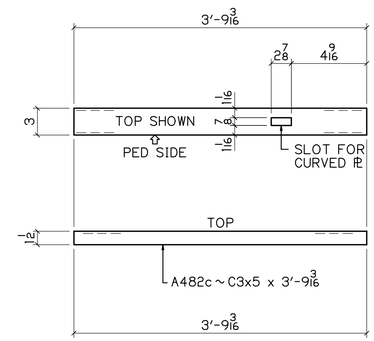

DETAIL OF A482c

BILL OF MATERIAL

NO	MK	NO	SUBMK	MATERIAL	FT	IN	REMARKS	SORT
1	A482			RAIL PANELS				MM
		2	A482a	HSS 4x2x3/16	4	3 1/4	SC2E	TS
		1	A482b	C3x5	3	9 3/16	SC2E	C
		1	A482c	C3x5	3	9 3/16	SC2E	C
		2	A482d	HSS 3x1 1/2x3/16	5	5 15/16	SC2E	TS
		1	A436e	PL 3/4x7 1/2	5	6	CURVED PL	PL

BU-19 BLUE-GREEN LINES
100% COMPLETE 08-16-21

P.H. DREW INC.
2450 N. RACEWAY RD. - P.O. BOX 34295
INDIANAPOLIS, INDIANA 46234
PHONE : (317) 297-5152
FAX : (317) 297-5313

APPROVAL
APPROVED 08-03-21

CUY-IR490 / SR010-2.09 / 19.28

DECORATIVE FENCE

RAIL PANELS

REVISION

REV	DATE	DESCRIPTION	BY

STATE	OHIO
COUNTY	CUYAHOGA (CITY OF CLEVELAND)
PROJECT	3000 (17)
CONTRACT	PID 96833
SECTION	
STRUCTURE	
STATE JOB	

APPROVAL RECORD

DATE	ISSUED	APP DATE	APPROVAL STATUS
08-16-21	FABRICATION		

CUSTOMER	LAKE ERIE CONSTRUCTION COMPANY
CONTRACTOR	
ARCH/ENG	
REFERENCE	
ITEM	
FINISH	SEE NOTES - SHT E400

DRAWN BY	CHECKED BY	MRH NO	JOB MGR	DWG STATUS	JOB NO.	TOTAL SHEETS	SHEET
MRH 07-21-21	SRF 08-12-21	1914	JL	FABRICATION 08-16-21	19-1108		482

DN

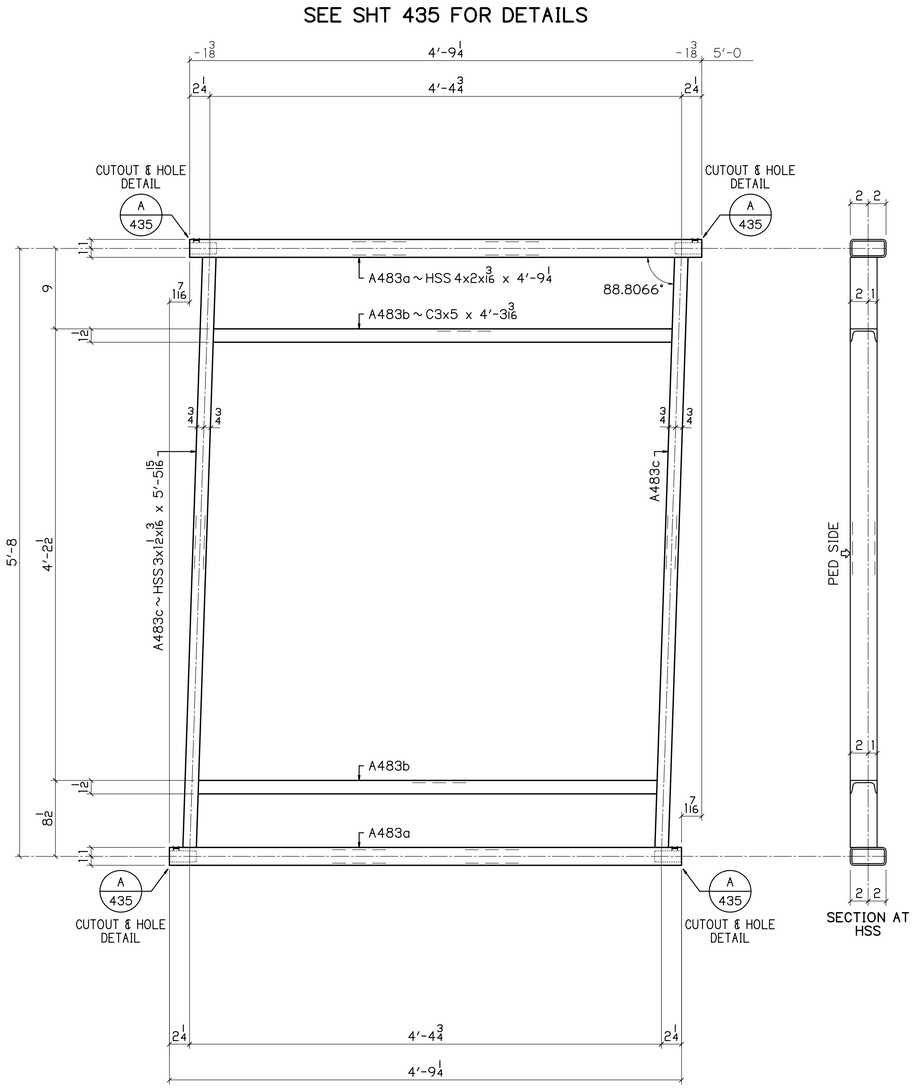

9 ~ A483

RAIL PANELS
PEDESTRIAN SIDE SHOWN

1.1934 1/4 / 12

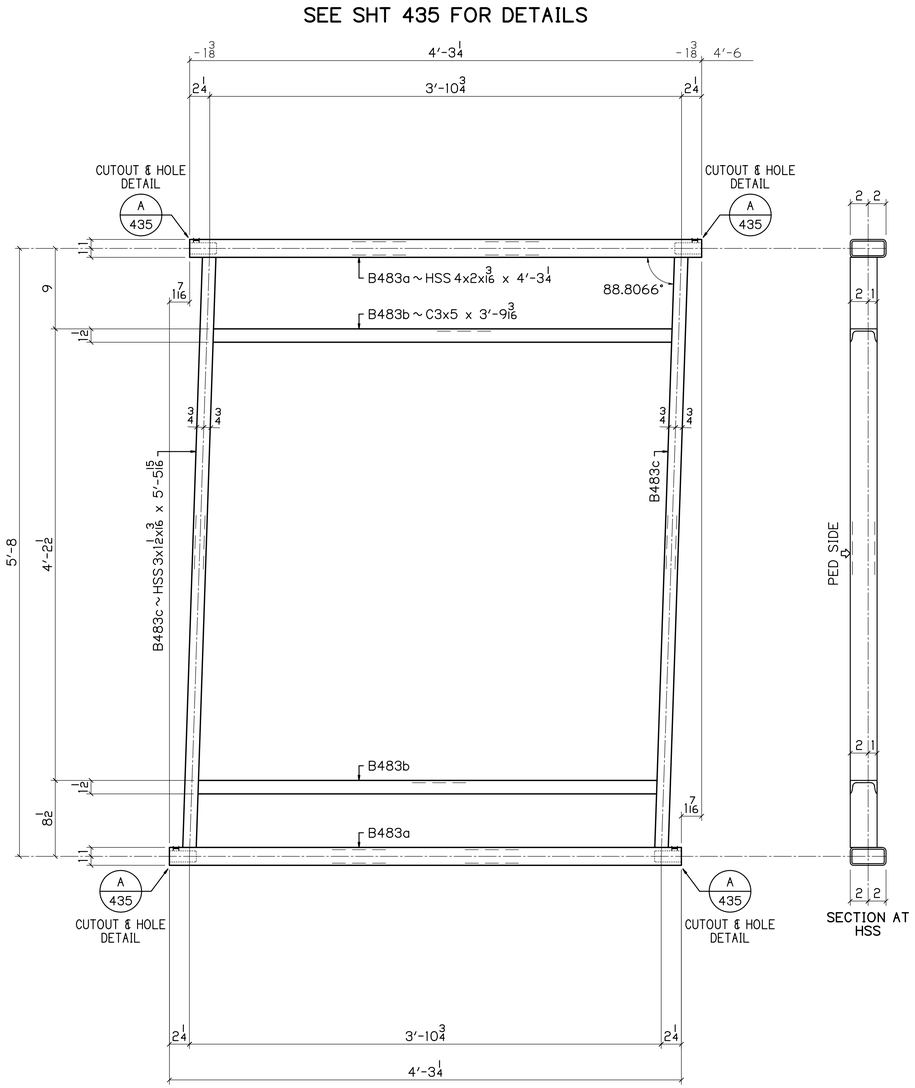

6 ~ B483

RAIL PANELS
PEDESTRIAN SIDE SHOWN

1.1934 1/4 / 12

UP

BILL OF MATERIAL

NO	MK	NO	SUBMK	MATERIAL	FT	IN	REMARKS	SORT
9	A483			RAIL PANELS				MM
		9	A483a	HSS 4x2x3/16	4	9 1/4	SC2E	TS
		9	A483b	C3x5	4	3 3/16	SC2E	C
		9	A483c	HSS 3x1 1/2x3/16	5	5 15/16	SC2E	TS
6	B483			RAIL PANELS				MM
		12	B483a	HSS 4x2x3/16	4	3 1/4	SC2E	TS
		12	B483b	C3x5	3	9 3/16	SC2E	C
		12	B483c	HSS 3x1 1/2x3/16	5	5 15/16	SC2E	TS

BU-19 BLUE-GREEN LINES
100% COMPLETE 08-16-21

P.H. DREW INC.
2450 N. RACEWAY RD. - P.O. BOX 34295
INDIANAPOLIS, INDIANA 46234
PHONE : (317) 297-5152
FAX : (317) 297-5313

APPROVAL: APPROVED 08-03-21

CUY-IR490 / SR010-2.09 / 19.28

DECORATIVE FENCE

RAIL PANELS

REVISION

REV	DATE	DESCRIPTION	BY

APPROVAL RECORD

DATE	ISSUED	APP DATE	APPROVAL STATUS
08-16-21	FABRICATION		

STATE	OHIO
COUNTY	CUYAHOGA (CITY OF CLEVELAND)
PROJECT	3000 (17)
CONTRACT	PID 96833
SECTION	
STRUCTURE	
STATE JOB	
CUSTOMER	LAKE ERIE CONSTRUCTION COMPANY
CONTRACTOR	
ARCH/ENG	
REFERENCE	
ITEM	
FINISH	SEE NOTES-SHT E400

DRAWN BY	CHECKED BY	MRH NO	JOB MGR	DWG STATUS	JOB NO.	TOTAL SHEETS	SHEET
MRH 07-21-21	SRF 08-12-21	1914	JL	FABRICATION 08-16-21	19-1108		483

SEE SHT 435 FOR DETAILS

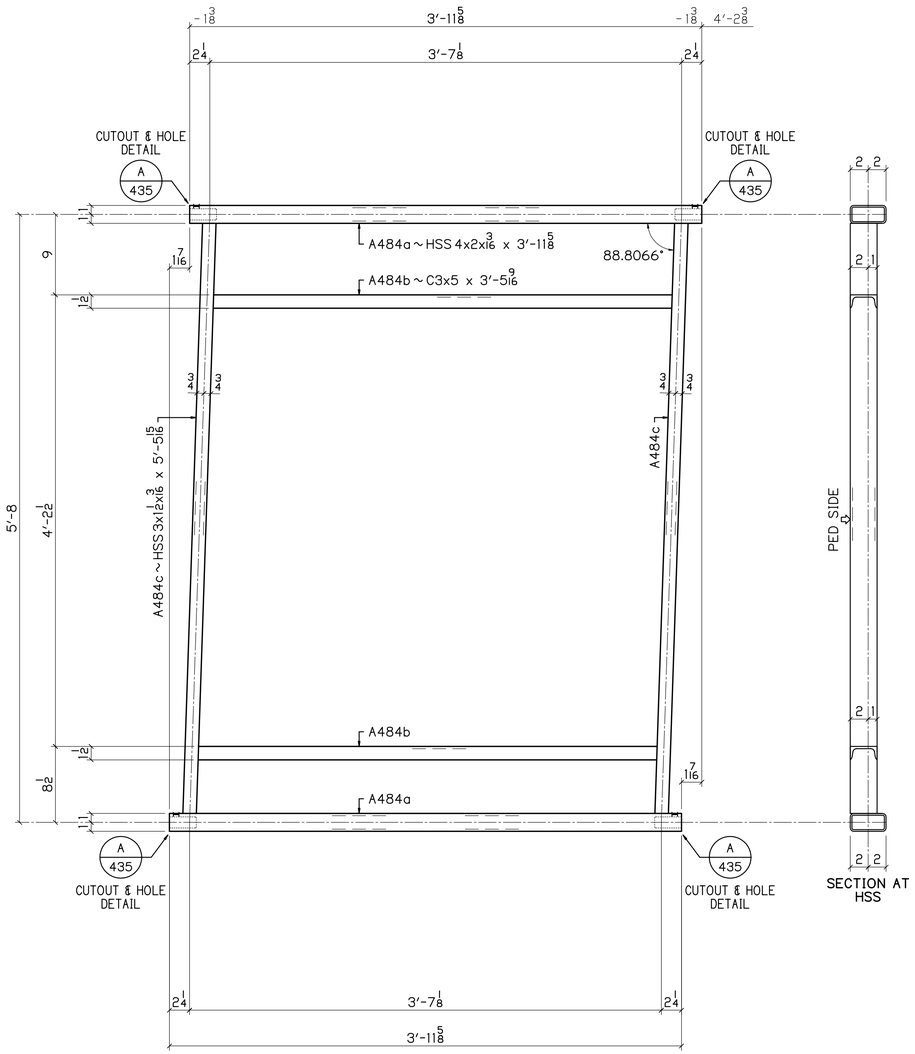

2 ~ A484

RAIL PANELS
PEDESTRIAN SIDE SHOWN

1.1934 1/4 / 12

SEE SHT 435 FOR DETAILS

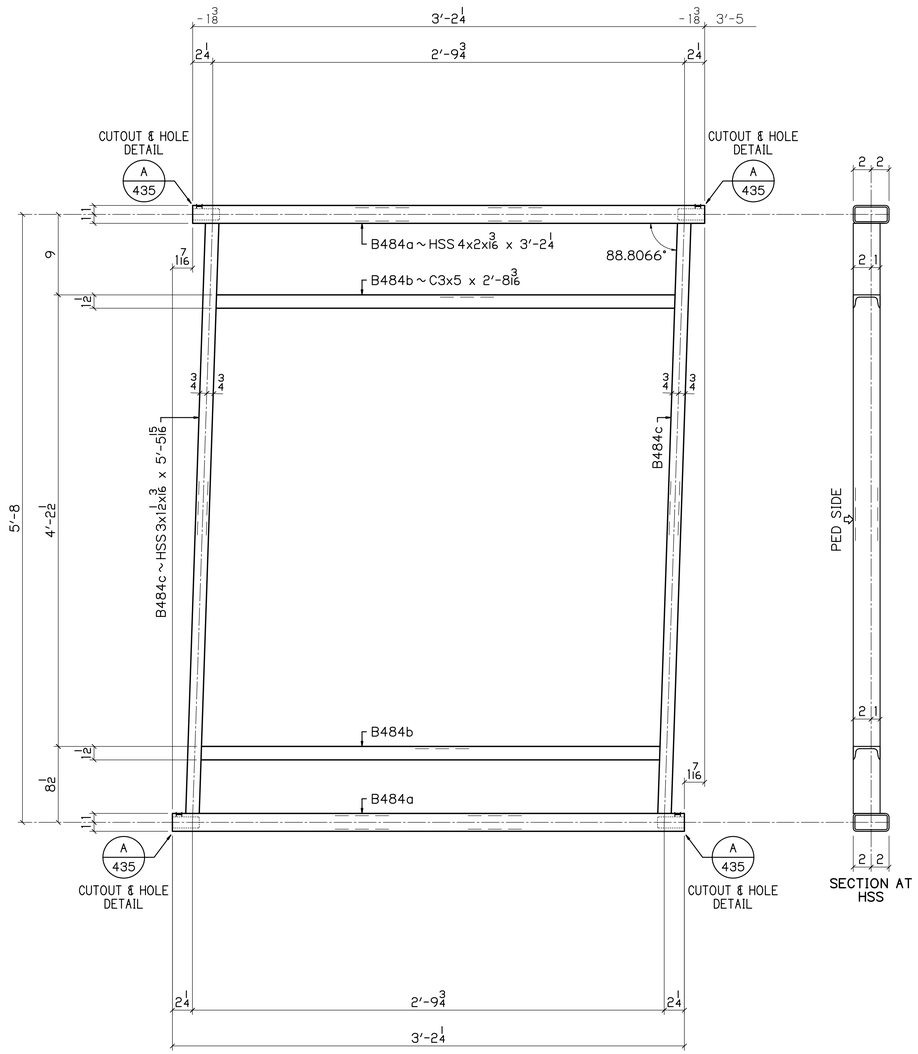

1 ~ B484

RAIL PANELS
PEDESTRIAN SIDE SHOWN

1.1934 1/4 / 12

UP

BILL OF MATERIAL

NO	MK	NO	SUBMK	MATERIAL	FT	IN	REMARKS	SORT
2	A484			RAIL PANELS				MM
		4	A484a	HSS 4x2x3/16	3	11 5/8	SC2E	TS
		4	A484b	C3x5	3	5 9/16	SC2E	C
		4	A484c	HSS 3x1 1/2x3/16	5	5 15/16	SC2E	TS
1	B484			RAIL PANELS				MM
		2	B484a	HSS 4x2x3/16	3	2 1/4	SC2E	TS
		2	B484b	C3x5	2	8 3/16	SC2E	C
		2	B484c	HSS 3x1 1/2x3/16	5	5 15/16	SC2E	TS

BU-19 BLUE-GREEN LINES
100% COMPLETE 08-16-21

P.H. DREW INC.
2450 N. RACEWAY RD. - P.O. BOX 34295
INDIANAPOLIS, INDIANA 46234
PHONE : (317) 297-5152
FAX : (317) 297-5313

APPROVAL: APPROVED 08-03-21

CUY-IR490 / SR010-2.09 / 19.28

DECORATIVE FENCE

RAIL PANELS

REVISION

REV	DATE	DESCRIPTION	BY

APPROVAL RECORD

DATE	ISSUED	APP DATE	APPROVAL STATUS
08-16-21	FABRICATION		

STATE	OHIO
COUNTY	CUYAHOGA (CITY OF CLEVELAND)
PROJECT	3000 (17)
CONTRACT	PID 96833
SECTION	
STRUCTURE	
STATE JOB	
CUSTOMER	LAKE ERIE CONSTRUCTION COMPANY
CONTRACTOR	
ARCH/ENG	
REFERENCE	
ITEM	
FINISH	SEE NOTES-SHT E400

DRAWN BY	CHECKED BY	MRH NO	JOB MGR	DWG STATUS	JOB NO.	TOTAL SHEETS	SHEET
MRH 07-21-21	SRF 08-12-21	1914	JL	FABRICATION 08-16-21	19-1108		484

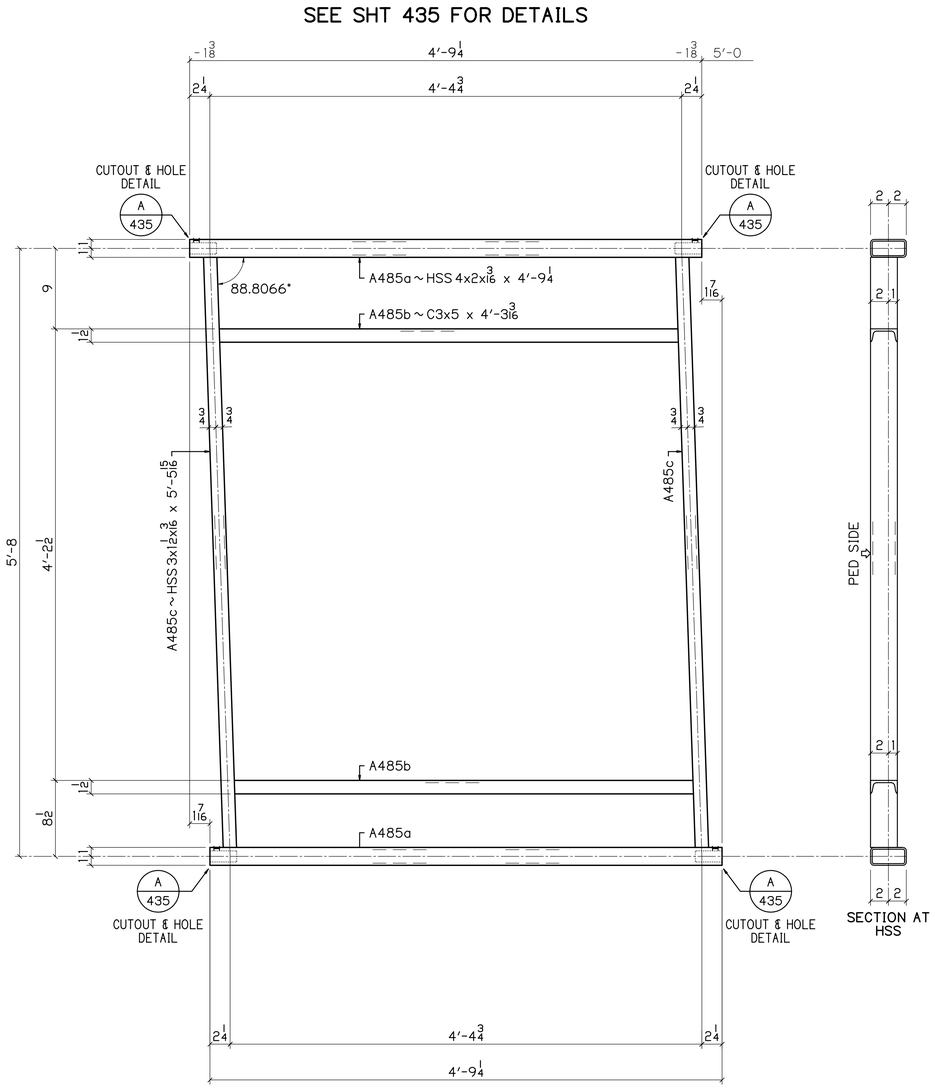

13 ~ A485

RAIL PANELS
PEDESTRIAN SIDE SHOWN

1/4 | 1.1934* / 12

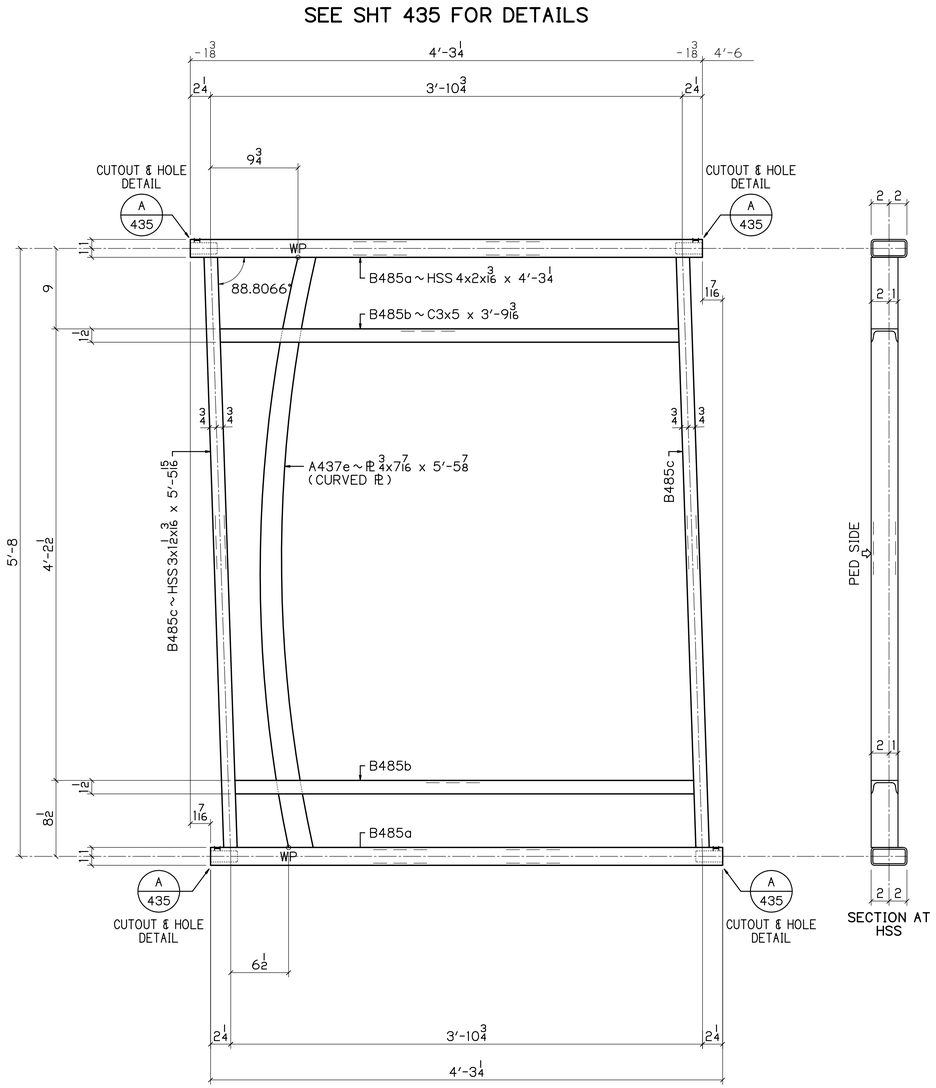

2 ~ B485

RAIL PANELS
PEDESTRIAN SIDE SHOWN

1/4 | 1.1934* / 12

BILL OF MATERIAL

NO	MK	NO	SUBMK	MATERIAL	FT	IN	REMARKS	SORT
13	A485			RAIL PANELS				MM
		26	A485a	HSS 4x2x3/16	4	9 1/4	SC2E	TS
		26	A485b	C3x5	4	3 3/16	SC2E	C
		26	A485c	HSS 3x1 1/2x3/16	5	5 15/16	SC2E	TS
2	B485			RAIL PANELS				MM
		4	B485a	HSS 4x2x3/16	4	3 1/4	SC2E	TS
		4	B485b	C3x5	3	9 3/16	SC2E	C
		4	B485d	HSS 3x1 1/2x3/16	5	5 15/16	SC2E	TS

BU-19 BLUE-GREEN LINES

100% COMPLETE 08-16-21

P.H. DREW INC.
2450 N. RACEWAY RD. - P.O. BOX 34295
INDIANAPOLIS, INDIANA 46234
PHONE : (317) 297-5152
FAX : (317) 297-5313

APPROVAL: APPROVED 08-03-21

CUY-IR490 / SR010-2.09 / 19.28

DECORATIVE FENCE

RAIL PANELS

REVISION

REV	DATE	DESCRIPTION	BY

STATE	OHIO
COUNTY	CUYAHOGA (CITY OF CLEVELAND)
PROJECT	3000 (17)
CONTRACT	PID 96833
SECTION	
STRUCTURE	
STATE JOB	

APPROVAL RECORD

DATE	ISSUED	APP DATE	APPROVAL STATUS
08-16-21	FABRICATION		

CUSTOMER	LAKE ERIE CONSTRUCTION COMPANY
CONTRACTOR	
ARCH/ENG	
REFERENCE	
ITEM	
FINISH	SEE NOTES-SHT E400

DRAWN BY	CHECKED BY	MRH NO	JOB MGR	DWG STATUS	JOB NO.	TOTAL SHEETS	SHEET
MRH 07-21-21	SRF 08-12-21	1914	JL	FABRICATION 08-16-21	19-1108		485

DN

SEE SHT 435 FOR DETAILS

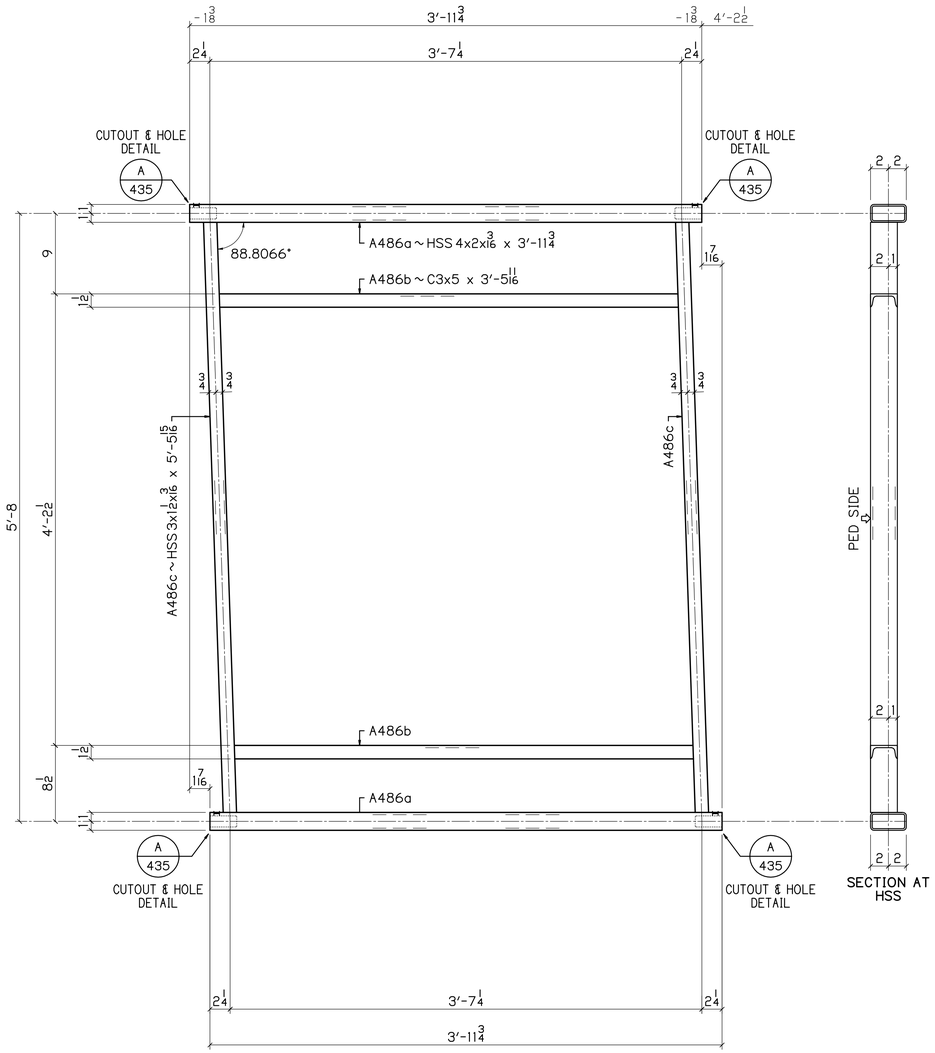

1 ~ A486

RAIL PANELS
PEDESTRIAN SIDE SHOWN

1/4 | 1.1934* / 12

DN

BILL OF MATERIAL

NO	MK	NO	SUBMK	MATERIAL	FT	IN	REMARKS	SORT
1	A486			RAIL PANELS				MM
		2	A486a	HSS 4x2x3/16	3	11 3/4	SC2E	TS
		2	A486b	C3x5	3	5 11/16	SC2E	C
		2	A486c	HSS 3x1 1/2x3/16	5	5 15/16	SC2E	TS

BU-19 BLUE-GREEN LINES
100% COMPLETE 08-16-21

P.H. DREW INC.
2450 N. RACEWAY RD. - P.O. BOX 34295
INDIANAPOLIS, INDIANA 46234
PHONE : (317) 297-5152
FAX : (317) 297-5313

APPROVAL: APPROVED 08-03-21

CUY-IR490 / SR010-2.09 / 19.28

DECORATIVE FENCE

RAIL PANELS

REVISION

REV	DATE	DESCRIPTION	BY

APPROVAL RECORD

DATE	ISSUED	APP DATE	APPROVAL STATUS
08-16-21	FABRICATION		

STATE	OHIO
COUNTY	CUYAHOGA (CITY OF CLEVELAND)
PROJECT	3000 (17)
CONTRACT	PID 96833
SECTION	
STRUCTURE	
STATE JOB	
CUSTOMER	LAKE ERIE CONSTRUCTION COMPANY
CONTRACTOR	
ARCH/ENG	
REFERENCE	
ITEM	
FINISH	SEE NOTES-SHT E400

DRAWN BY	CHECKED BY	MRH NO	JOB MGR	DWG STATUS	JOB NO.	TOTAL SHEETS	SHEET
MRH 07-21-21	SRF 08-12-21	1914	JL	FABRICATION 08-16-21	19-1108		486

SEE SHT 435 FOR DETAILS

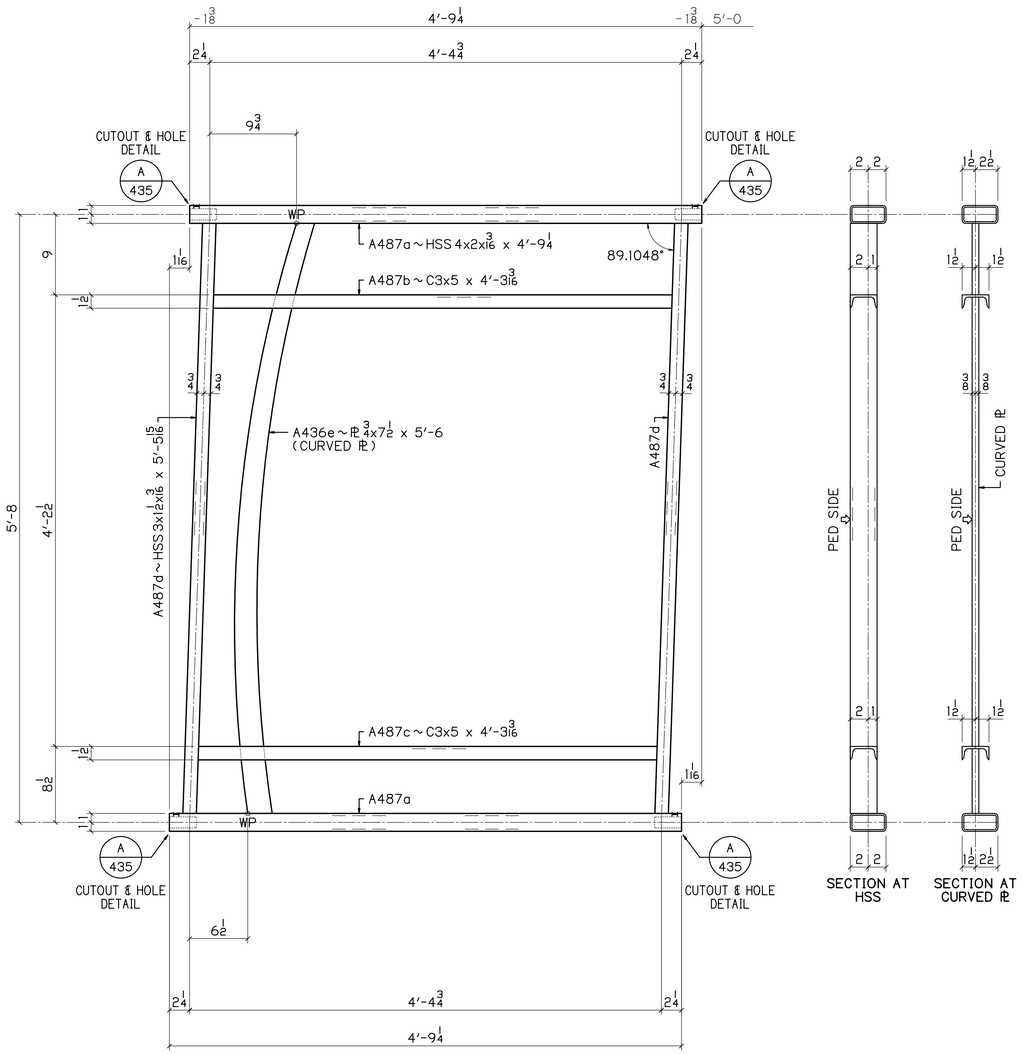

1 ~ A487

RAIL PANELS
PEDESTRIAN SIDE SHOWN

0.8952 1 3/16 / 12

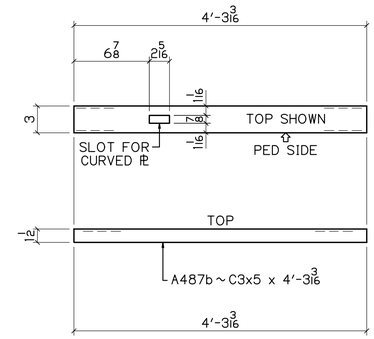

DETAIL OF A487b

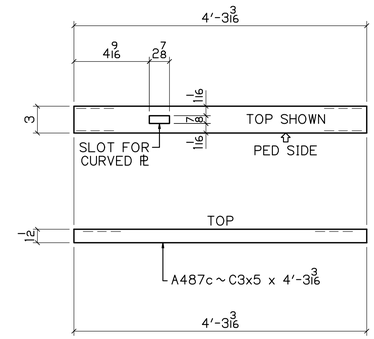

DETAIL OF A487c

UP

BILL OF MATERIAL

NO	MK	NO	SUBMK	MATERIAL	FT	IN	REMARKS	SORT
1	A487			RAIL PANELS				MM
		2	A487a	HSS 4x2x3/16	4	9 1/4	SC2E	TS
		1	A487b	C3x5	4	3 3/16	SC2E	C
		1	A487c	C3x5	4	3 3/16	SC2E	C
		2	A487d	HSS 3x1 1/2x3/16	5	5 15/16	SC2E	TS
		1	A436e	PL 3/4x7 1/2	5	6	CURVED PL	PL

BU-19 BLUE-GREEN LINES
100% COMPLETE 08-16-21

P.H. DREW INC.
2450 N. RACEWAY RD. - P.O. BOX 34295
INDIANAPOLIS, INDIANA 46234
PHONE : (317) 297-5152
FAX : (317) 297-5313

APPROVAL: APPROVED 08-03-21

CUY-IR490 / SR010-2.09 / 19.28
DECORATIVE FENCE
RAIL PANELS

REVISION

REV	DATE	DESCRIPTION	BY

APPROVAL RECORD

DATE	ISSUED	APP DATE	APPROVAL STATUS
08-16-21	FABRICATION		

STATE	OHIO
COUNTY	CUYAHOGA (CITY OF CLEVELAND)
PROJECT	3000 (17)
CONTRACT	PID 96833
SECTION	
STRUCTURE	
STATE JOB	
CUSTOMER	LAKE ERIE CONSTRUCTION COMPANY
CONTRACTOR	
ARCH/ENG	
REFERENCE	
ITEM	
FINISH	SEE NOTES - SHT E400

DRAWN BY	CHECKED BY	MRH NO	JOB MGR	DWG STATUS	JOB NO.	TOTAL SHEETS	SHEET
MRH 07-21-21	SRF 08-12-21	1914	JL	FABRICATION 08-16-21	19-1108		487A

SEE SHT 435 FOR DETAILS

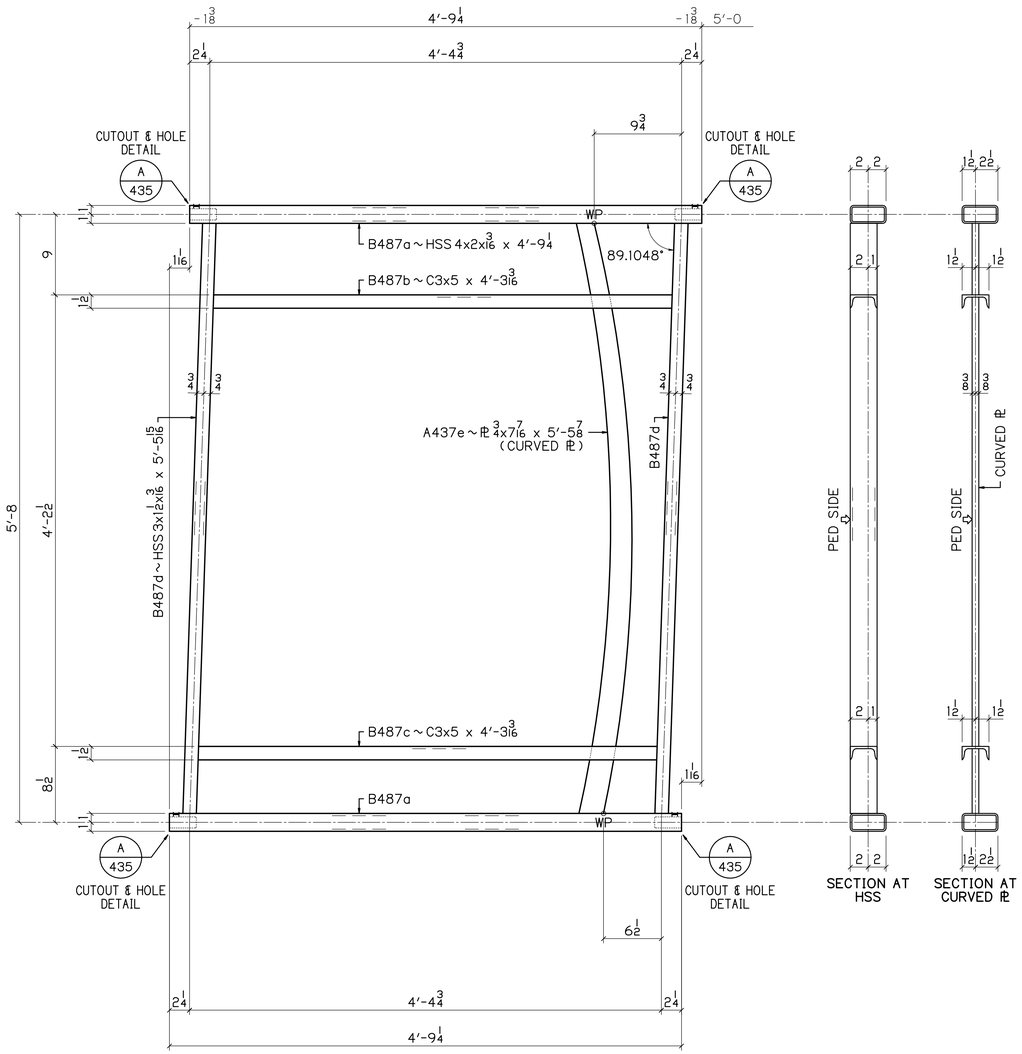

1 ~ B487

RAIL PANELS
PEDESTRIAN SIDE SHOWN

0.8952 1 3/16 / 12

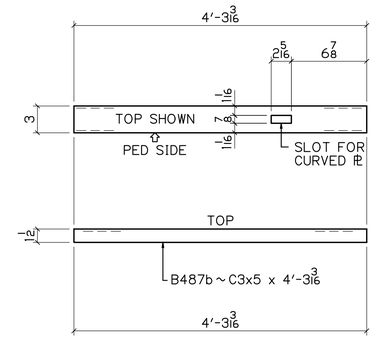

DETAIL OF B487b

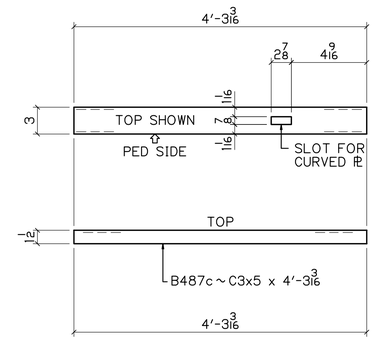

DETAIL OF B487c

UP

BILL OF MATERIAL

NO	MK	NO	SUBMK	MATERIAL	FT	IN	REMARKS	SORT
1	B487			RAIL PANELS				MM
		2	B487a	HSS 4x2x3/16	4	9 1/4	SC2E	TS
		1	B487b	C3x5	4	3 3/16	SC2E	C
		1	B487c	C3x5	4	3 3/16	SC2E	C
		2	B487d	HSS 3x1 1/2x3/16	5	5 15/16	SC2E	TS
		1	A437e	PL 3/4x7/16	5	5 7/8	CURVED PL	PL

BU-19 BLUE-GREEN LINES
100% COMPLETE 08-16-21

P.H. DREW INC.
2450 N. RACEWAY RD. - P.O. BOX 34295
INDIANAPOLIS, INDIANA 46234
PHONE : (317) 297-5152
FAX : (317) 297-5313

APPROVAL: APPROVED 08-03-21

CUY-IR490 / SR010-2.09 / 19.28

DECORATIVE FENCE

RAIL PANELS

REVISION

REV	DATE	DESCRIPTION	BY

APPROVAL RECORD

DATE	ISSUED	APP DATE	APPROVAL STATUS
08-16-21	FABRICATION		

STATE	OHIO
COUNTY	CUYAHOGA (CITY OF CLEVELAND)
PROJECT	3000 (17)
CONTRACT	PID 96833
SECTION	
STRUCTURE	
STATE JOB	
CUSTOMER	LAKE ERIE CONSTRUCTION COMPANY
CONTRACTOR	
ARCH/ENG	
REFERENCE	
ITEM	
FINISH	SEE NOTES - SHT E400

DRAWN BY	CHECKED BY	MRH NO	JOB MGR	DWG STATUS	JOB NO.	TOTAL SHEETS	SHEET
MRH 07-21-21	SRF 08-12-21	1914	JL	FABRICATION 08-16-21	19-1108		487B

SEE SHT 435 FOR DETAILS

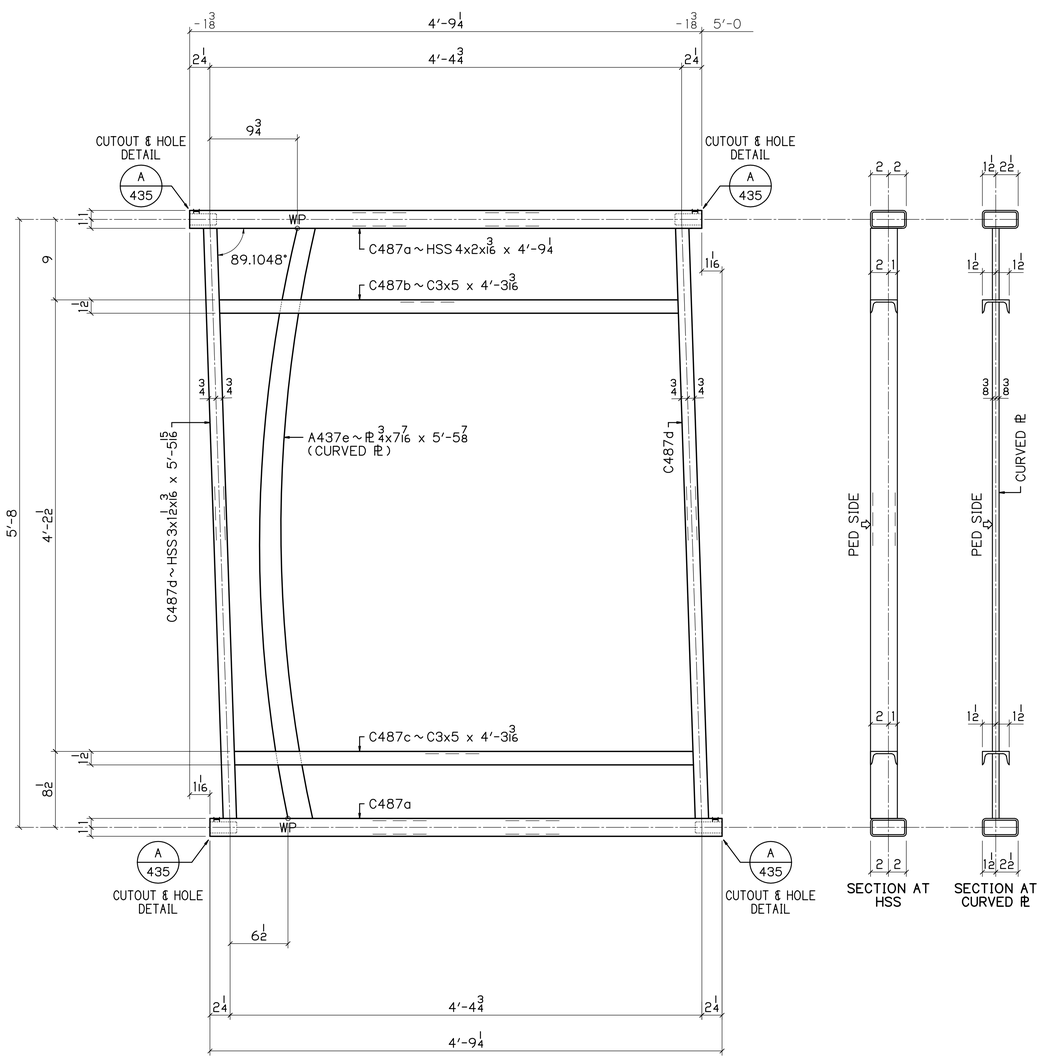

1 ~ C487

RAIL PANELS
PEDESTRIAN SIDE SHOWN

3/16 | 0.8952° / 12

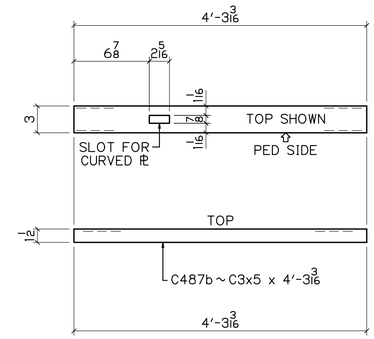

DETAIL OF C487b

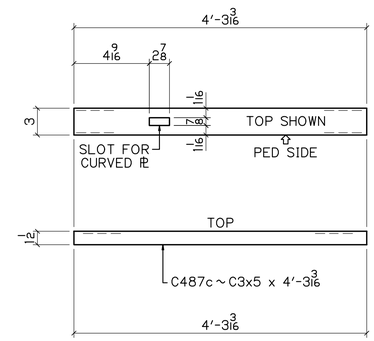

DETAIL OF C487c

BILL OF MATERIAL

NO	MK	NO	SUBMK	MATERIAL	FT	IN	REMARKS	SORT
1	C487			RAIL PANELS				MM
		2	C487a	HSS 4x2x3/16	4	9 1/4	SC2E	TS
		1	C487b	C3x5	4	3 3/16	SC2E	C
		1	C487c	C3x5	4	3 3/16	SC2E	C
		2	C487d	HSS 3x1 1/2x3/16	5	5 15/16	SC2E	TS
		1	A437e	PL 3/4x7/16	5	5 7/8	CURVED PL	PL

BU-19 BLUE-GREEN LINES
100% COMPLETE 08-16-21

P.H. DREW INC.
2450 N. RACEWAY RD. - P.O. BOX 34295
INDIANAPOLIS, INDIANA 46234
PHONE : (317) 297-5152
FAX : (317) 297-5313

APPROVAL: APPROVED 08-03-21

CUY-IR490 / SR010-2.09 / 19.28

DECORATIVE FENCE

RAIL PANELS

REVISION

REV	DATE	DESCRIPTION	BY

STATE	OHIO
COUNTY	CUYAHOGA (CITY OF CLEVELAND)
PROJECT	3000 (17)
CONTRACT	PID 96833
SECTION	
STRUCTURE	
STATE JOB	

APPROVAL RECORD

DATE	ISSUED	APP DATE	APPROVAL STATUS
08-16-21	FABRICATION		

CUSTOMER	LAKE ERIE CONSTRUCTION COMPANY
CONTRACTOR	
ARCH/ENG	
REFERENCE	
ITEM	
FINISH	SEE NOTES - SHT E400

DRAWN BY	CHECKED BY	MRH NO	JOB MGR	DWG STATUS	JOB NO.	TOTAL SHEETS	SHEET
MRH 07-21-21	SRF 08-12-21	1914	JL	FABRICATION 08-16-21	19-1108		487C

DN

SEE SHT 435 FOR DETAILS

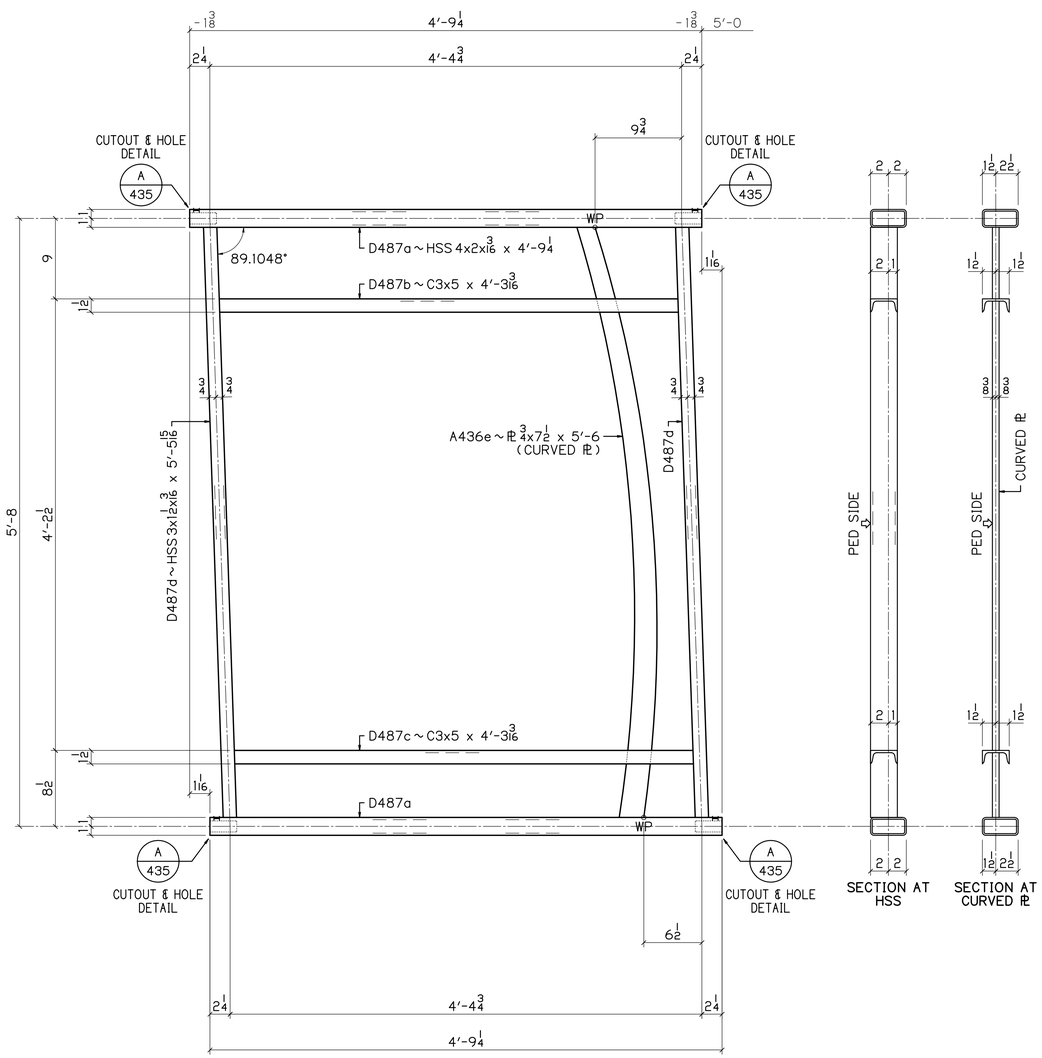

1 ~ D487

RAIL PANELS
PEDESTRIAN SIDE SHOWN

3/16 | 0.8952°
12

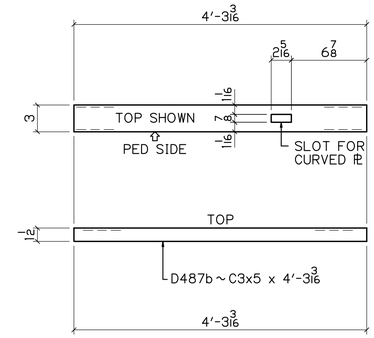

DETAIL OF D487b

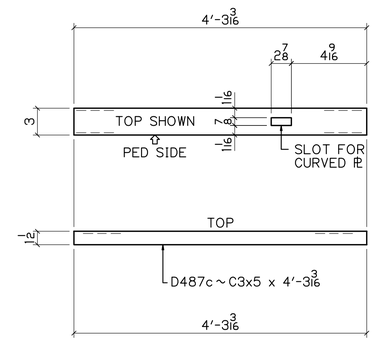

DETAIL OF D487c

BILL OF MATERIAL

NO	MK	NO	SUBMK	MATERIAL	FT	IN	REMARKS	SORT
1	D487			RAIL PANELS				MM
		2	D487a	HSS 4x2x3/16	4	9 1/4	SC2E	TS
		1	D487b	C3x5	4	3 3/16	SC2E	C
		1	D487c	C3x5	4	3 3/16	SC2E	C
		2	D487d	HSS 3x1 1/2x3/16	5	5 15/16	SC2E	TS
		1	A436e	PL 3/4x7 1/2	5	6	CURVED PL	PL

BU-19 BLUE-GREEN LINES
100% COMPLETE 08-16-21

P.H. DREW INC.
2450 N. RACEWAY RD. - P.O. BOX 34295
INDIANAPOLIS, INDIANA 46234
PHONE : (317) 297-5152
FAX : (317) 297-5313

APPROVAL: APPROVED 08-03-21

CUY-IR490 / SR010-2.09 / 19.28
DECORATIVE FENCE
RAIL PANELS

REVISION

REV	DATE	DESCRIPTION	BY

STATE	OHIO
COUNTY	CUYAHOGA (CITY OF CLEVELAND)
PROJECT	3000 (17)
CONTRACT	PID 96833
SECTION	
STRUCTURE	
STATE JOB	

APPROVAL RECORD

DATE	ISSUED	APP DATE	APPROVAL STATUS
08-16-21	FABRICATION		

CUSTOMER	LAKE ERIE CONSTRUCTION COMPANY
CONTRACTOR	
ARCH/ENG	
REFERENCE	
ITEM	
FINISH	SEE NOTES - SHT E400

DRAWN BY	CHECKED BY	MRH NO	JOB MGR	DWG STATUS	JOB NO.	TOTAL SHEETS	SHEET
MRH 07-21-21	SRF 08-12-21	1914	JL	FABRICATION 08-16-21	19-1108		487D

DN

SEE SHT 435 FOR DETAILS

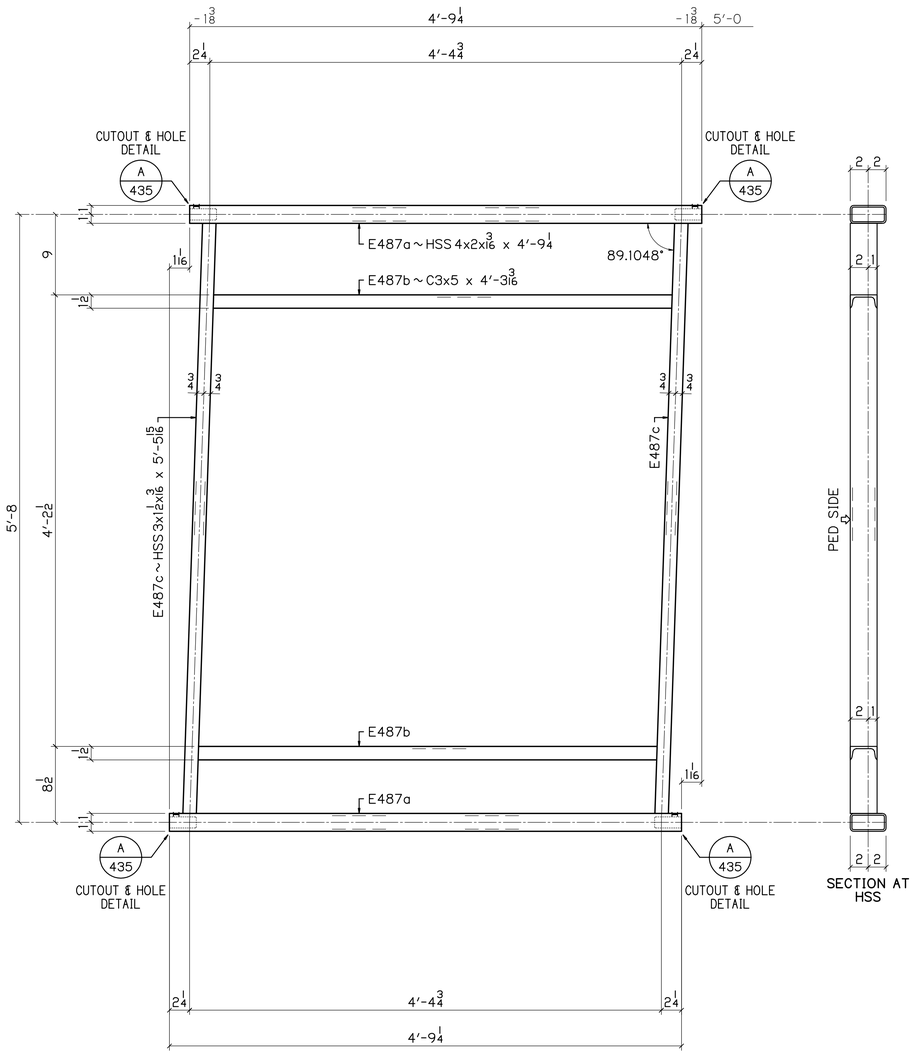

5 ~ E487

RAIL PANELS
PEDESTRIAN SIDE SHOWN

0.8952" | 3/16 / 12

SEE SHT 435 FOR DETAILS

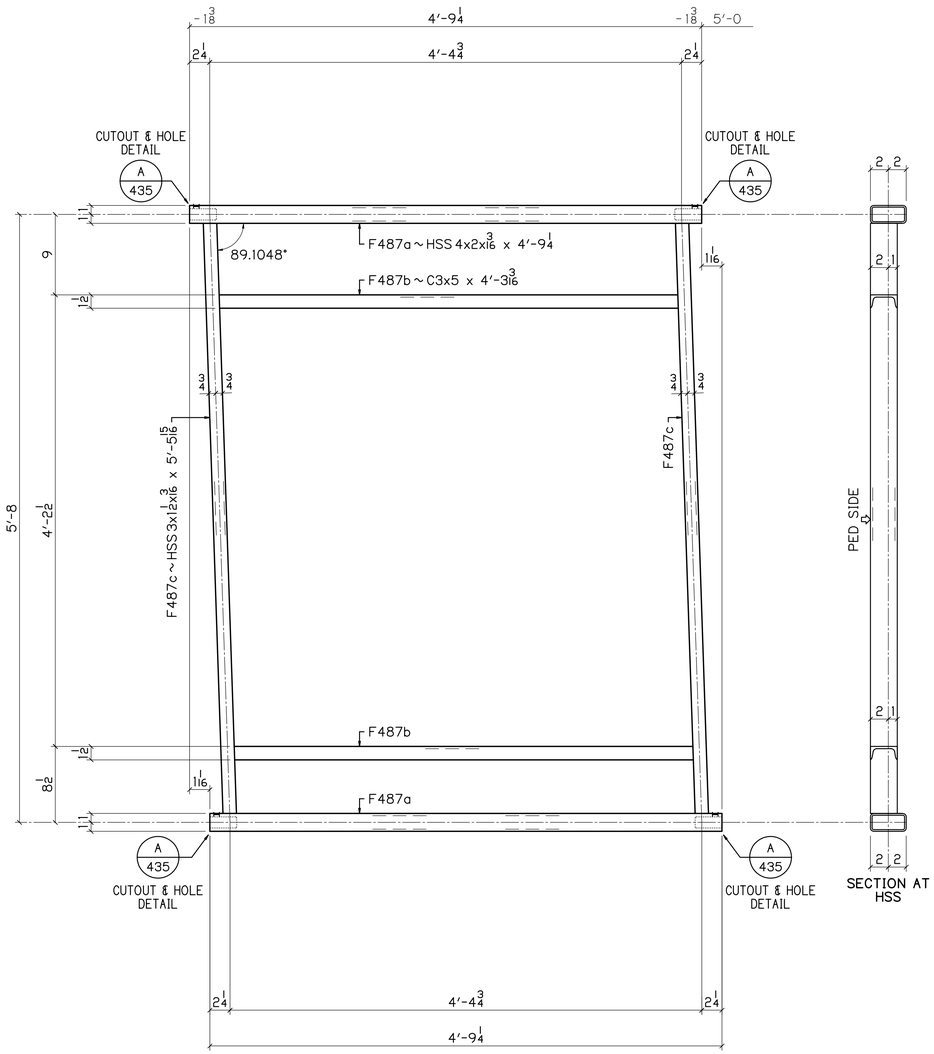

5 ~ F487

RAIL PANELS
PEDESTRIAN SIDE SHOWN

3/16 | 0.8952" / 12

UP

DN

BILL OF MATERIAL

NO	MK	NO	SUBMK	MATERIAL	FT	IN	REMARKS	SORT
5	E487			RAIL PANELS				MM
		10	E487a	HSS 4x2x3/16	4	9 1/4	SC2E	TS
		10	E487b	C3x5	4	3 3/16	SC2E	C
		10	E487c	HSS 3x1 1/2x3/16	5	5 15/16	SC2E	TS
5	F487			RAIL PANELS				MM
		10	F487a	HSS 4x2x3/16	4	9 1/4	SC2E	TS
		10	F487b	C3x5	4	3 3/16	SC2E	C
		10	F487c	HSS 3x1 1/2x3/16	5	5 15/16	SC2E	TS

BU-19 BLUE-GREEN LINES

100% COMPLETE 08-16-21

P.H. DREW INC.
2450 N. RACEWAY RD. - P.O. BOX 34295
INDIANAPOLIS, INDIANA 46234
PHONE : (317) 297-5152
FAX : (317) 297-5313

APPROVAL: APPROVED 08-03-21

CUY-IR490 / SR010-2.09 / 19.28

DECORATIVE FENCE

RAIL PANELS

REVISION

REV	DATE	DESCRIPTION	BY

STATE	OHIO
COUNTY	CUYAHOGA (CITY OF CLEVELAND)
PROJECT	3000 (17)
CONTRACT	PID 96833
SECTION	
STRUCTURE	
STATE JOB	

APPROVAL RECORD

DATE	ISSUED	APP DATE	APPROVAL STATUS
08-16-21	FABRICATION		

CUSTOMER	LAKE ERIE CONSTRUCTION COMPANY
CONTRACTOR	
ARCH/ENG	
REFERENCE	
ITEM	
FINISH	SEE NOTES-SHT E400

DRAWN BY	CHECKED BY	MRH NO	JOB MGR	DWG STATUS	JOB NO.	TOTAL SHEETS	SHEET
MRH 07-21-21	SRF 08-12-21	1914	JL	FABRICATION 08-16-21	19-1108		487E

SEE SHT 435 FOR DETAILS

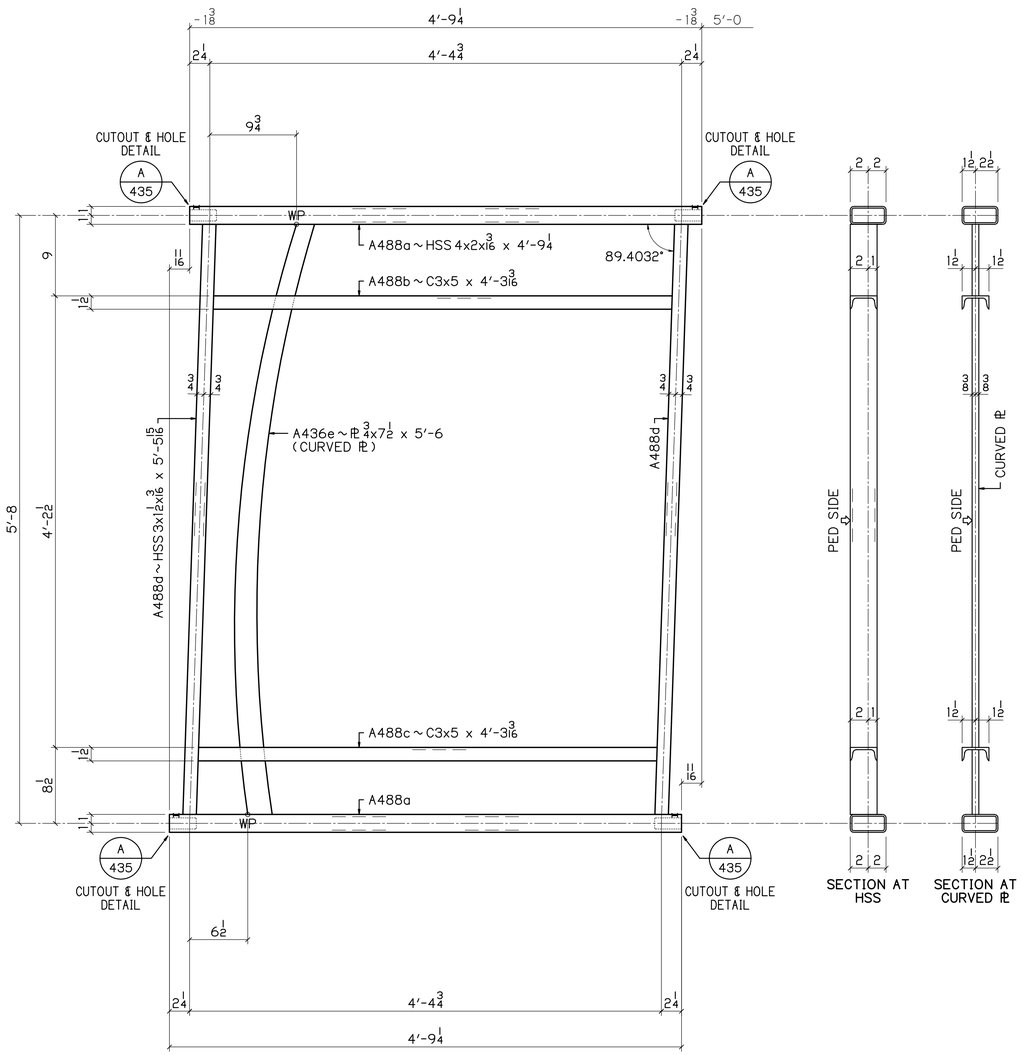

1 ~ A488

RAIL PANELS
PEDESTRIAN SIDE SHOWN

0.5968 1/8 / 12

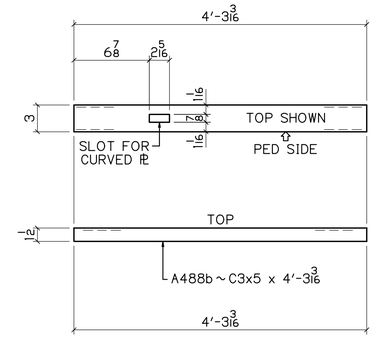

DETAIL OF A488b

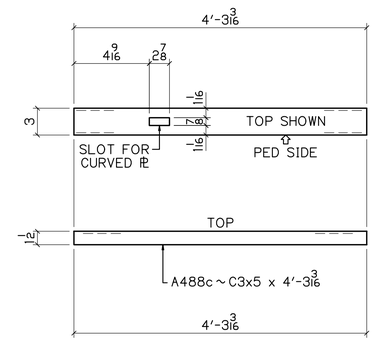

DETAIL OF A488c

UP

BILL OF MATERIAL

NO	MK	NO	SUBMK	MATERIAL	FT	IN	REMARKS	SORT
1	A488			RAIL PANELS				MM
		2	A488a	HSS 4x2x3/16	4	9 1/4	SC2E	TS
		1	A488b	C3x5	4	3 3/16	SC2E	C
		1	A488c	C3x5	4	3 3/16	SC2E	C
		2	A488d	HSS 3x1 1/2x3/16	5	5 15/16	SC2E	TS
		1	A436e	PL 3/4x7 1/2	5	6	CURVED PL	PL

BU-19 BLUE-GREEN LINES
100% COMPLETE 08-16-21

P.H. DREW INC.
2450 N. RACEWAY RD. - P.O. BOX 34295
INDIANAPOLIS, INDIANA 46234
PHONE : (317) 297-5152
FAX : (317) 297-5313

APPROVAL: APPROVED 08-03-21

CUY-IR490 / SR010-2.09 / 19.28

DECORATIVE FENCE

RAIL PANELS

REVISION

REV	DATE	DESCRIPTION	BY

STATE	OHIO
COUNTY	CUYAHOGA (CITY OF CLEVELAND)
PROJECT	3000 (17)
CONTRACT	PID 96833
SECTION	
STRUCTURE	
STATE JOB	

APPROVAL RECORD

DATE	ISSUED	APP DATE	APPROVAL STATUS
08-16-21	FABRICATION		

CUSTOMER	LAKE ERIE CONSTRUCTION COMPANY
CONTRACTOR	
ARCH/ENG	
REFERENCE	
ITEM	
FINISH	SEE NOTES - SHT E400

DRAWN BY	CHECKED BY	MRH NO	JOB MGR	DWG STATUS	JOB NO.	TOTAL SHEETS	SHEET
MRH 07-21-21	SRF 08-12-21	1914	JL	FABRICATION 08-16-21	19-1108		488A

SEE SHT 435 FOR DETAILS

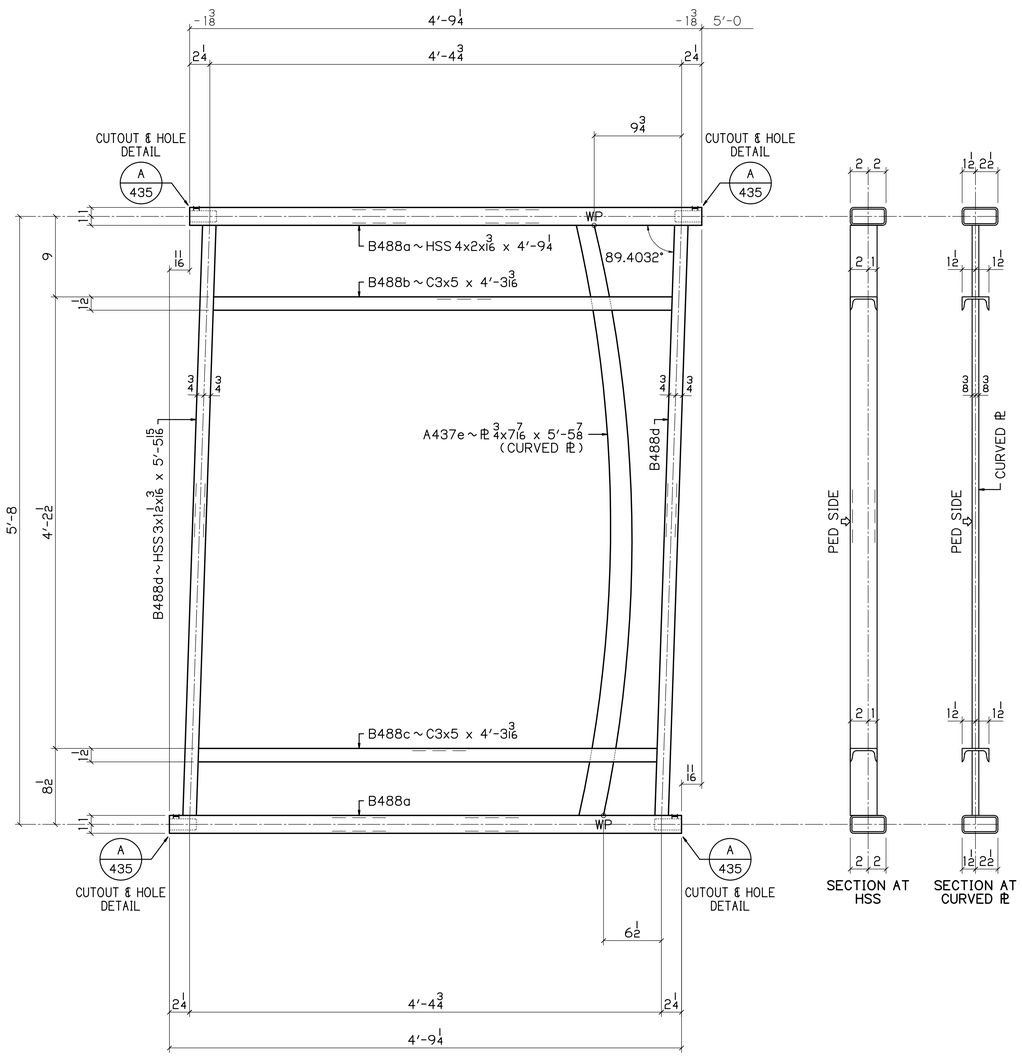

1 ~ B488

RAIL PANELS
PEDESTRIAN SIDE SHOWN

0.5968 1 1/8 / 12

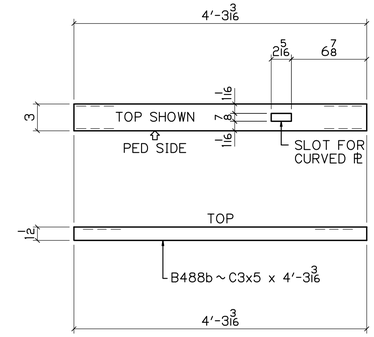

DETAIL OF B488b

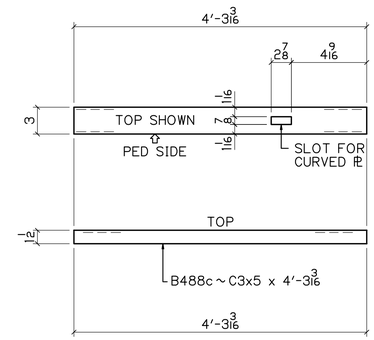

DETAIL OF B488c

UP

BILL OF MATERIAL

NO	MK	NO	SUBMK	MATERIAL	FT	IN	REMARKS	SORT
1	B488			RAIL PANELS				MM
		2	B488a	HSS 4x2x1/16	4	9 1/4	SC2E	TS
		1	B488b	C3x5	4	3 3/16	SC2E	C
		1	B488c	C3x5	4	3 3/16	SC2E	C
		2	B488d	HSS 3x1 1/2x1/16	5	5 15/16	SC2E	TS
		1	A437e	PL 3/4x7/16	5	5 7/8	CURVED PL	PL

BU-19 BLUE-GREEN LINES
100% COMPLETE 08-16-21

P.H. DREW INC.
2450 N. RACEWAY RD. - P.O. BOX 34295
INDIANAPOLIS, INDIANA 46234
PHONE : (317) 297-5152
FAX : (317) 297-5313

APPROVAL: APPROVED 08-03-21

CUY-IR490 / SR010-2.09 / 19.28

DECORATIVE FENCE

RAIL PANELS

REVISION	REV	DATE	DESCRIPTION	BY

APPROVAL RECORD	DATE	ISSUED	APP DATE	APPROVAL STATUS
	08-16-21	FABRICATION		

STATE	OHIO
COUNTY	CUYAHOGA (CITY OF CLEVELAND)
PROJECT	3000 (17)
CONTRACT	PID 96833
SECTION	
STRUCTURE	
STATE JOB	
CUSTOMER	LAKE ERIE CONSTRUCTION COMPANY
CONTRACTOR	
ARCH/ENG	
REFERENCE	
ITEM	
FINISH	SEE NOTES-SHT E400

DRAWN BY	CHECKED BY	MRH NO	JOB MGR	DWG STATUS	JOB NO.	TOTAL SHEETS	SHEET
MRH 07-21-21	SRF 08-12-21	1914	JL	FABRICATION 08-16-21	19-1108		488B

SEE SHT 435 FOR DETAILS

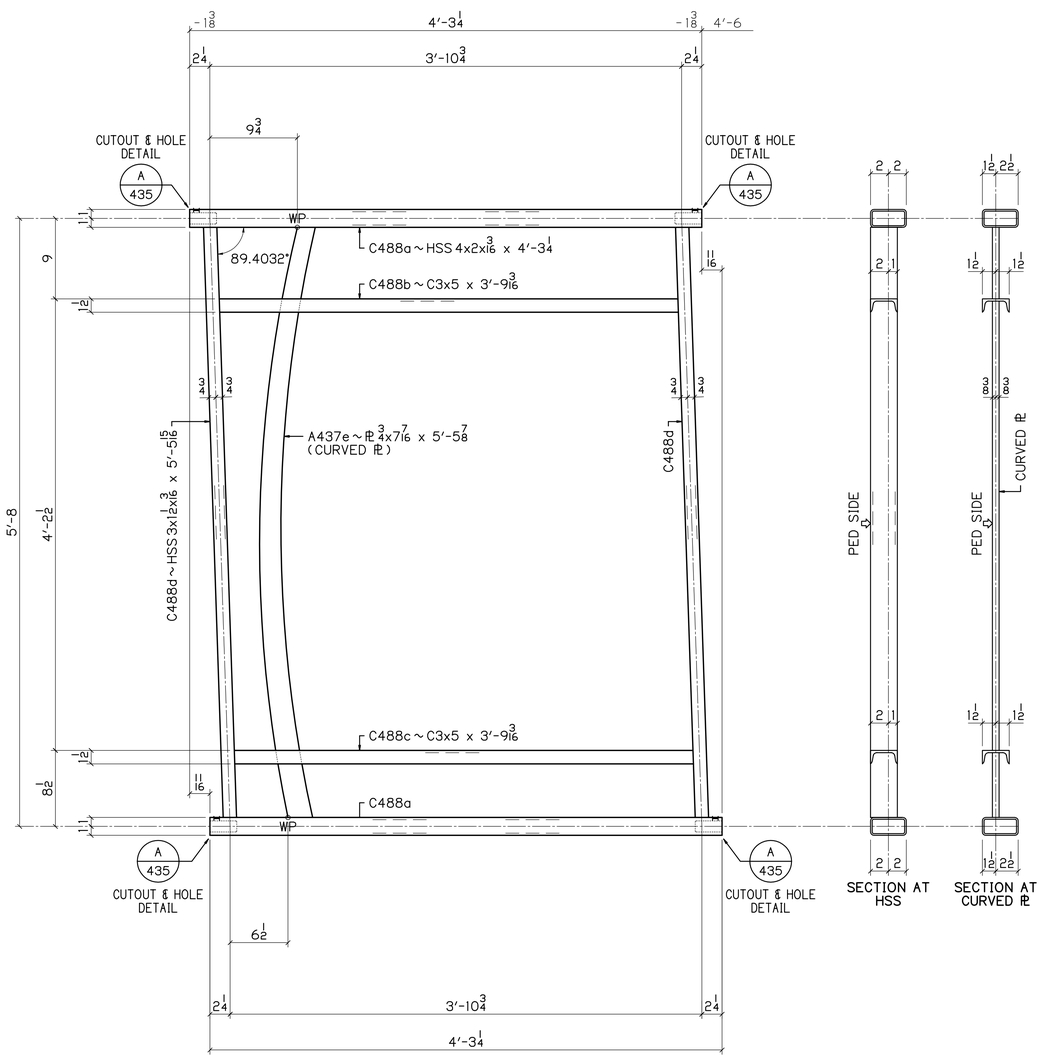

1 ~ C488

RAIL PANELS
PEDESTRIAN SIDE SHOWN

1/8 | 0.5968" / 12

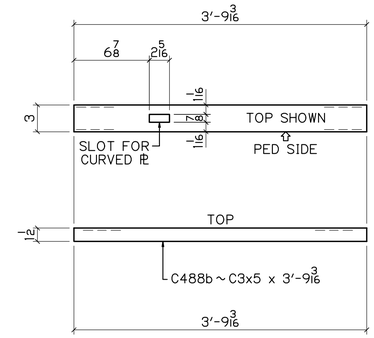

DETAIL OF C488b

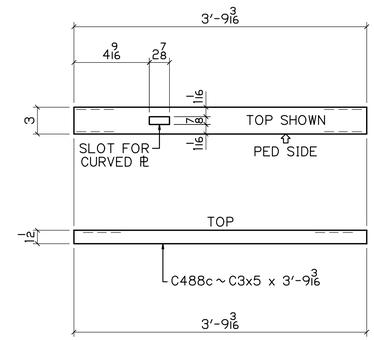

DETAIL OF C488c

BILL OF MATERIAL

NO	MK	NO	SUBMK	MATERIAL	FT	IN	REMARKS	SORT
1	C488			RAIL PANELS				MM
		2	C488a	HSS 4x2x3/16	4	3 1/4	SC2E	TS
		1	C488b	C3x5	3	9 3/16	SC2E	C
		1	C488c	C3x5	3	9 3/16	SC2E	C
		2	C488d	HSS 3x1 1/2x3/16	5	5 15/16	SC2E	TS
		1	A437e	PL 3/4x7/16	5	5 7/8	CURVED PL	PL

BU-19 BLUE-GREEN LINES
100% COMPLETE 08-16-21

P.H. DREW INC.
2450 N. RACEWAY RD. - P.O. BOX 34295
INDIANAPOLIS, INDIANA 46234
PHONE : (317) 297-5152
FAX : (317) 297-5313

APPROVAL: APPROVED 08-03-21

CUY-IR490 / SR010-2.09 / 19.28

DECORATIVE FENCE

RAIL PANELS

REVISION

REV	DATE	DESCRIPTION	BY

STATE	OHIO
COUNTY	CUYAHOGA (CITY OF CLEVELAND)
PROJECT	3000 (17)
CONTRACT	PID 96833
SECTION	
STRUCTURE	
STATE JOB	

APPROVAL RECORD

DATE	ISSUED	APP DATE	APPROVAL STATUS
08-16-21	FABRICATION		

CUSTOMER	LAKE ERIE CONSTRUCTION COMPANY
CONTRACTOR	
ARCH/ENG	
REFERENCE	
ITEM	
FINISH	SEE NOTES-SHT E400

DRAWN BY	CHECKED BY	MRH NO	JOB MGR	DWG STATUS	JOB NO.	TOTAL SHEETS	SHEET
MRH 07-21-21	SRF 08-12-21	1914	JL	FABRICATION 08-16-21	19-1108		488C

DN

SEE SHT 435 FOR DETAILS

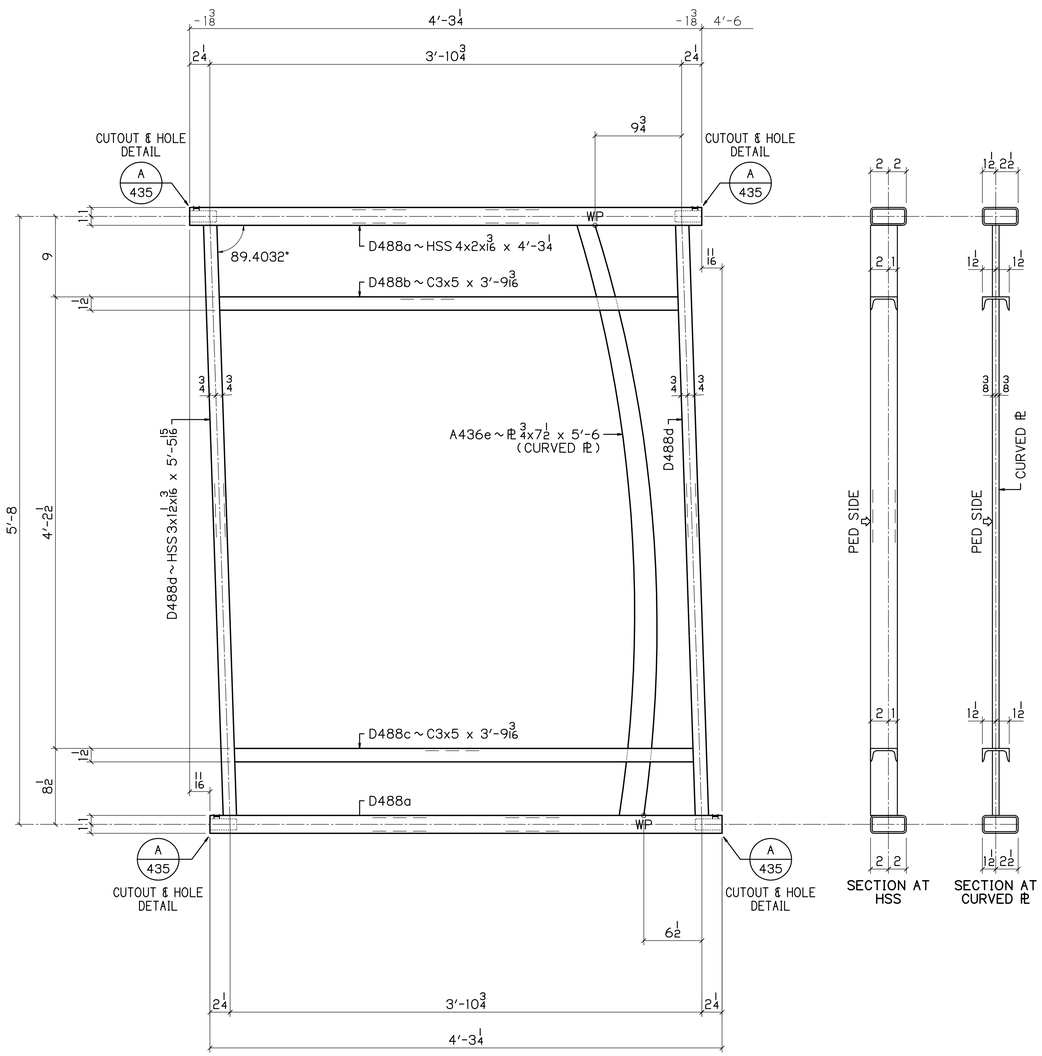

1 ~ D488

RAIL PANELS
PEDESTRIAN SIDE SHOWN

1/8 | 0.5968" / 12

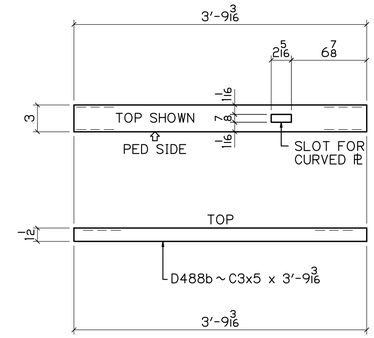

DETAIL OF D488b

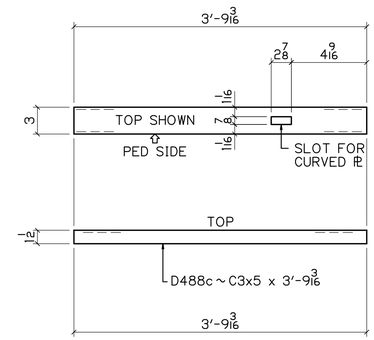

DETAIL OF D488c

BILL OF MATERIAL

NO	MK	NO	SUBMK	MATERIAL	FT	IN	REMARKS	SORT
1	D488			RAIL PANELS				MM
		2	D488a	HSS 4x2x3/16	4	3 1/4	SC2E	TS
		1	D488b	C3x5	3	9 3/16	SC2E	C
		1	D488c	C3x5	3	9 3/16	SC2E	C
		2	D488d	HSS 3x1 1/2x3/16	5	5 15/16	SC2E	TS
		1	A436e	PL 3/4x7 1/2	5	6	CURVED PL	PL

BU-19 BLUE-GREEN LINES
100% COMPLETE 08-16-21

P.H. DREW INC.
2450 N. RACEWAY RD. - P.O. BOX 34295
INDIANAPOLIS, INDIANA 46234
PHONE : (317) 297-5152
FAX : (317) 297-5313

APPROVAL: APPROVED 08-03-21

CUY-IR490 / SR010-2.09 / 19.28

DECORATIVE FENCE

RAIL PANELS

REVISION

REV	DATE	DESCRIPTION	BY

STATE	OHIO
COUNTY	CUYAHOGA (CITY OF CLEVELAND)
PROJECT	3000 (17)
CONTRACT	PID 96833
SECTION	
STRUCTURE	
STATE JOB	
CUSTOMER	LAKE ERIE CONSTRUCTION COMPANY
CONTRACTOR	
ARCH/ENG	
REFERENCE	
ITEM	
FINISH	SEE NOTES-SHT E400

APPROVAL RECORD

DATE	ISSUED	APP DATE	APPROVAL STATUS
08-16-21	FABRICATION		

DRAWN BY	CHECKED BY	MRH NO	JOB MGR	DWG STATUS	JOB NO.	TOTAL SHEETS	SHEET
MRH 07-21-21	SRF 08-12-21	1914	JL	FABRICATION 08-16-21	19-1108		488D

DN

SEE SHT 435 FOR DETAILS

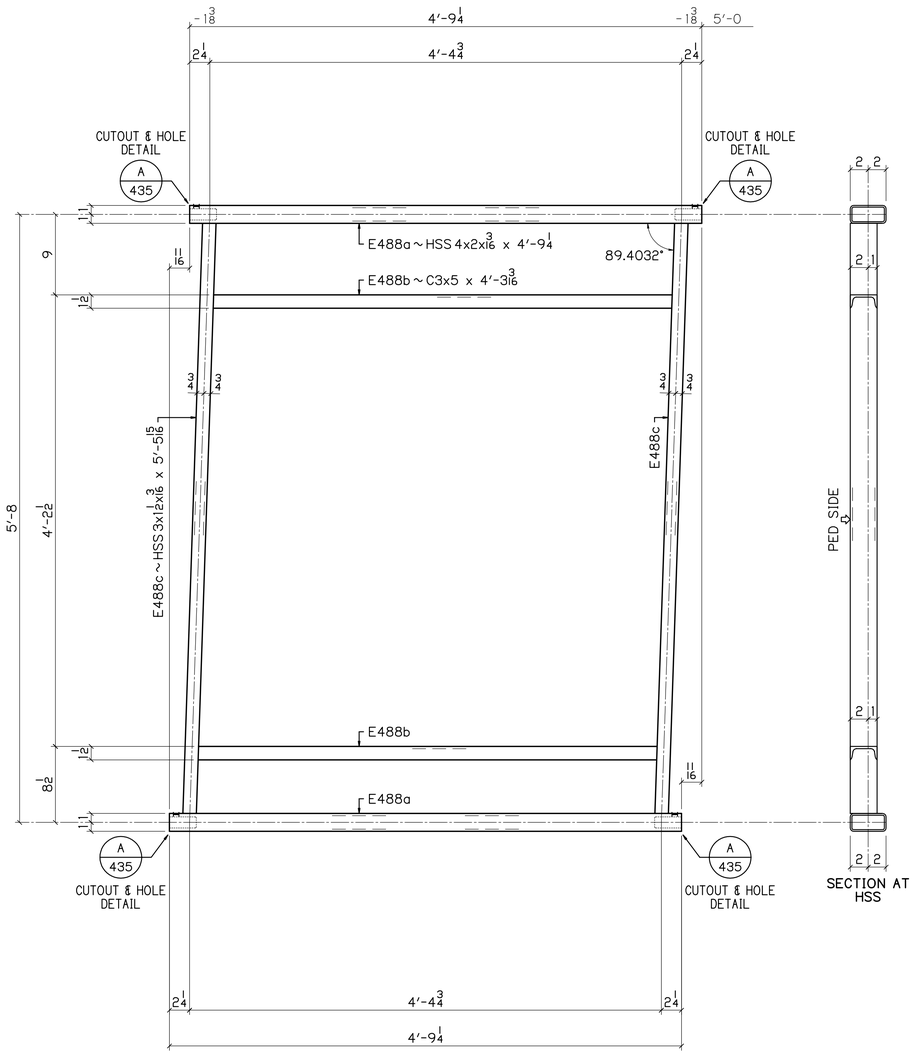

5 ~ E488

RAIL PANELS
PEDESTRIAN SIDE SHOWN

0.5968" 1 1/8 / 12

SEE SHT 435 FOR DETAILS

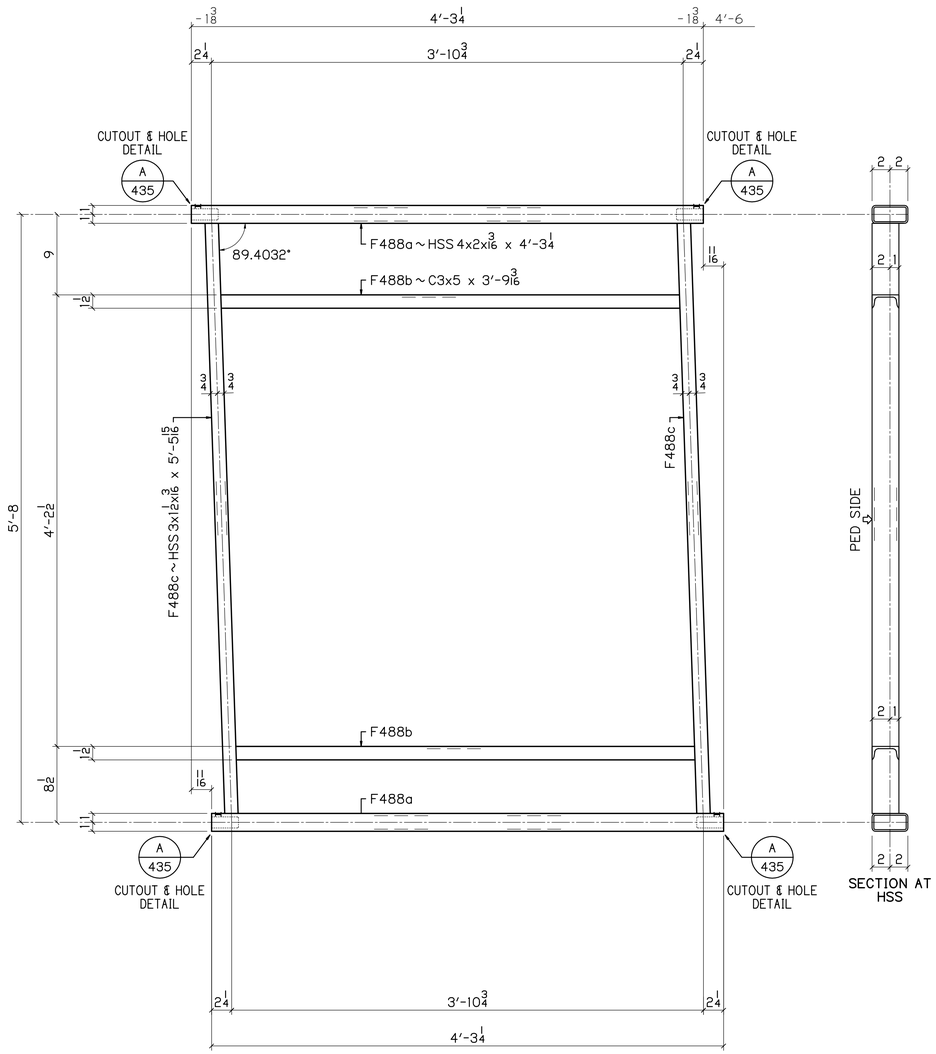

6 ~ F488

RAIL PANELS
PEDESTRIAN SIDE SHOWN

1/8 | 0.5968" / 12

UP

DN

BILL OF MATERIAL

NO	MK	NO	SUBMK	MATERIAL	FT	IN	REMARKS	SORT
5	E488			RAIL PANELS				MM
		10	E488a	HSS 4x2x3/16	4	9 1/4	SC2E	TS
		10	E488b	C3x5	4	3 3/16	SC2E	C
		10	E488c	HSS 3x1 1/2x3/16	5	5 15/16	SC2E	TS
6	F488			RAIL PANELS				MM
		12	F488a	HSS 4x2x3/16	4	3 1/4	SC2E	TS
		12	F488b	C3x5	3	9 3/16	SC2E	C
		12	F488c	HSS 3x1 1/2x3/16	5	5 15/16	SC2E	TS

BU-19 BLUE-GREEN LINES
100% COMPLETE 08-16-21

P.H. DREW INC.
2450 N. RACEWAY RD. - P.O. BOX 34295
INDIANAPOLIS, INDIANA 46234
PHONE : (317) 297-5152
FAX : (317) 297-5313

APPROVAL: APPROVED 08-03-21

CUY-IR490 / SR010-2.09 / 19.28

DECORATIVE FENCE

RAIL PANELS

REVISION

REV	DATE	DESCRIPTION	BY

STATE	OHIO
COUNTY	CUYAHOGA (CITY OF CLEVELAND)
PROJECT	3000 (17)
CONTRACT	PID 96833
SECTION	
STRUCTURE	
STATE JOB	

APPROVAL RECORD

DATE	ISSUED	APP DATE	APPROVAL STATUS
08-16-21	FABRICATION		

CUSTOMER	LAKE ERIE CONSTRUCTION COMPANY
CONTRACTOR	
ARCH/ENG	
REFERENCE	
ITEM	
FINISH	SEE NOTES-SHT E400

DRAWN BY	CHECKED BY	MRH NO	JOB MGR	DWG STATUS	JOB NO.	TOTAL SHEETS	SHEET
MRH 07-21-21	SRF 08-12-21	1914	JL	FABRICATION 08-16-21	19-1108		488E

SEE SHT 435 FOR DETAILS

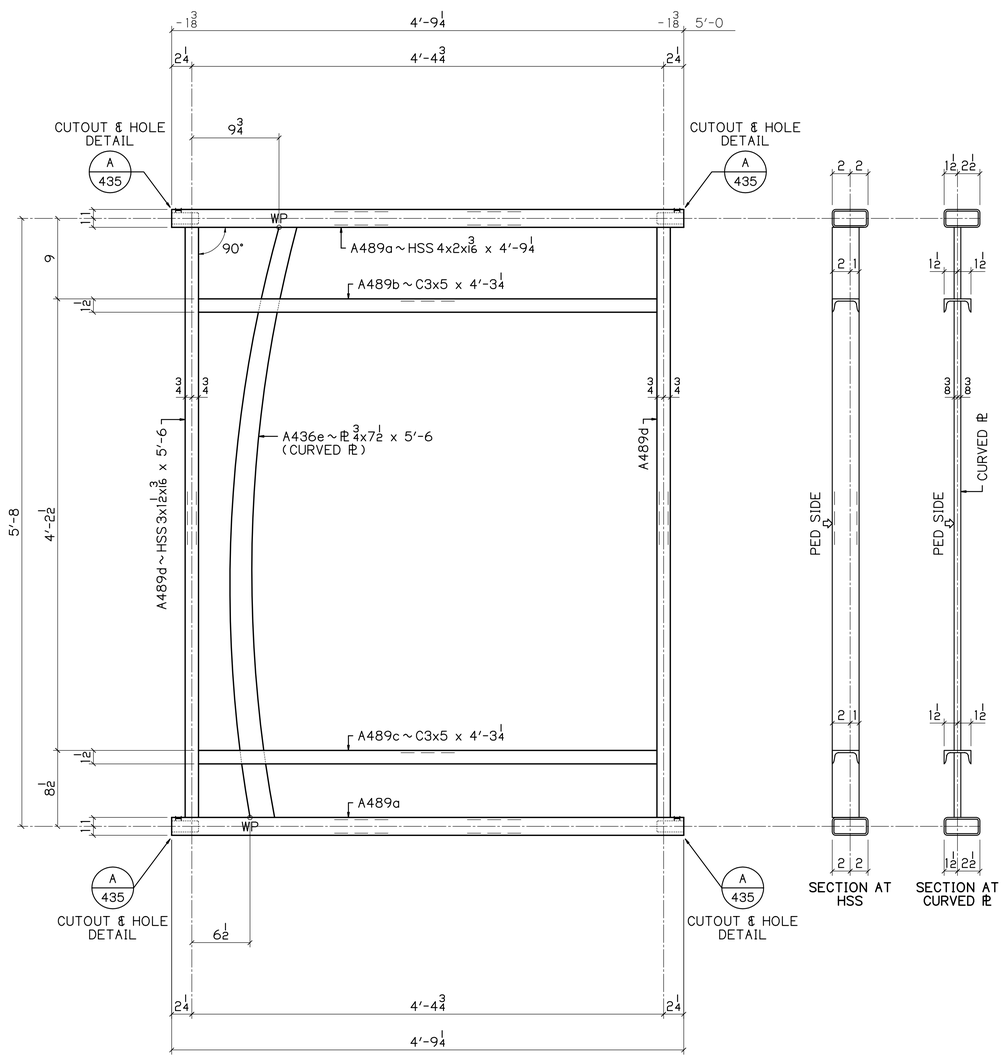

1 ~ A489
RAIL PANELS
PEDESTRIAN SIDE SHOWN
LEVEL

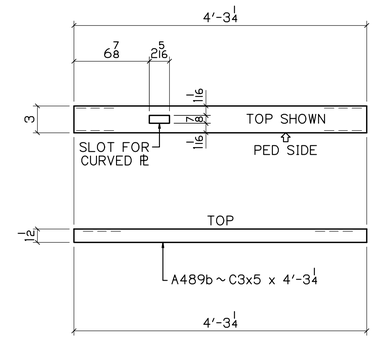

DETAIL OF A489b

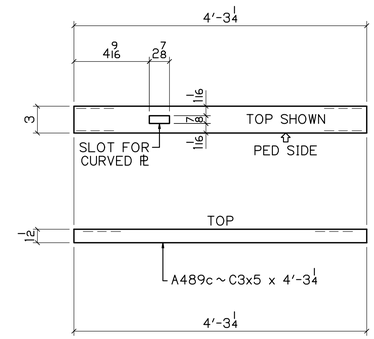

DETAIL OF A489c

BILL OF MATERIAL

NO	MK	NO	SUBMK	MATERIAL	FT	IN	REMARKS	SORT
1	A489			RAIL PANELS				MM
		2	A489a	HSS 4x2x3/16	4	9 1/4	SC2E	TS
		1	A489b	C3x5	4	3 1/4	SC2E	C
		1	A489c	C3x5	4	3 1/4	SC2E	C
		2	A489d	HSS 3x1 1/2x3/16	5	6	SC2E	TS
		1	A436e	PL 3/4x7 1/2	5	6	CURVED PL	PL

BU-25 EAST 89TH STREET
100% COMPLETE 08-16-21

P.H. DREW INC.
2450 N. RACEWAY RD. - P.O. BOX 34295
INDIANAPOLIS, INDIANA 46234
PHONE : (317) 297-5152
FAX : (317) 297-5313

APPROVAL: APPROVED 08-03-21

CUY-IR490 / SR010-2.09 / 19.28
DECORATIVE FENCE
RAIL PANELS

REVISION

REV	DATE	DESCRIPTION	BY

STATE	OHIO
COUNTY	CUYAHOGA (CITY OF CLEVELAND)
PROJECT	3000 (17)
CONTRACT	PID 96833
SECTION	
STRUCTURE	
STATE JOB	

APPROVAL RECORD

DATE	ISSUED	APP DATE	APPROVAL STATUS
08-16-21	FABRICATION		

CUSTOMER	LAKE ERIE CONSTRUCTION COMPANY
CONTRACTOR	
ARCH/ENG	
REFERENCE	
ITEM	
FINISH	SEE NOTES - SHT E400

DRAWN BY	CHECKED BY	MRH NO	JOB MGR	DWG STATUS	JOB NO.	TOTAL SHEETS	SHEET
MRH 07-21-21	SRF 08-12-21	1914	JL	FABRICATION 08-16-21	19-1108		489A

LEV

SEE SHT 435 FOR DETAILS

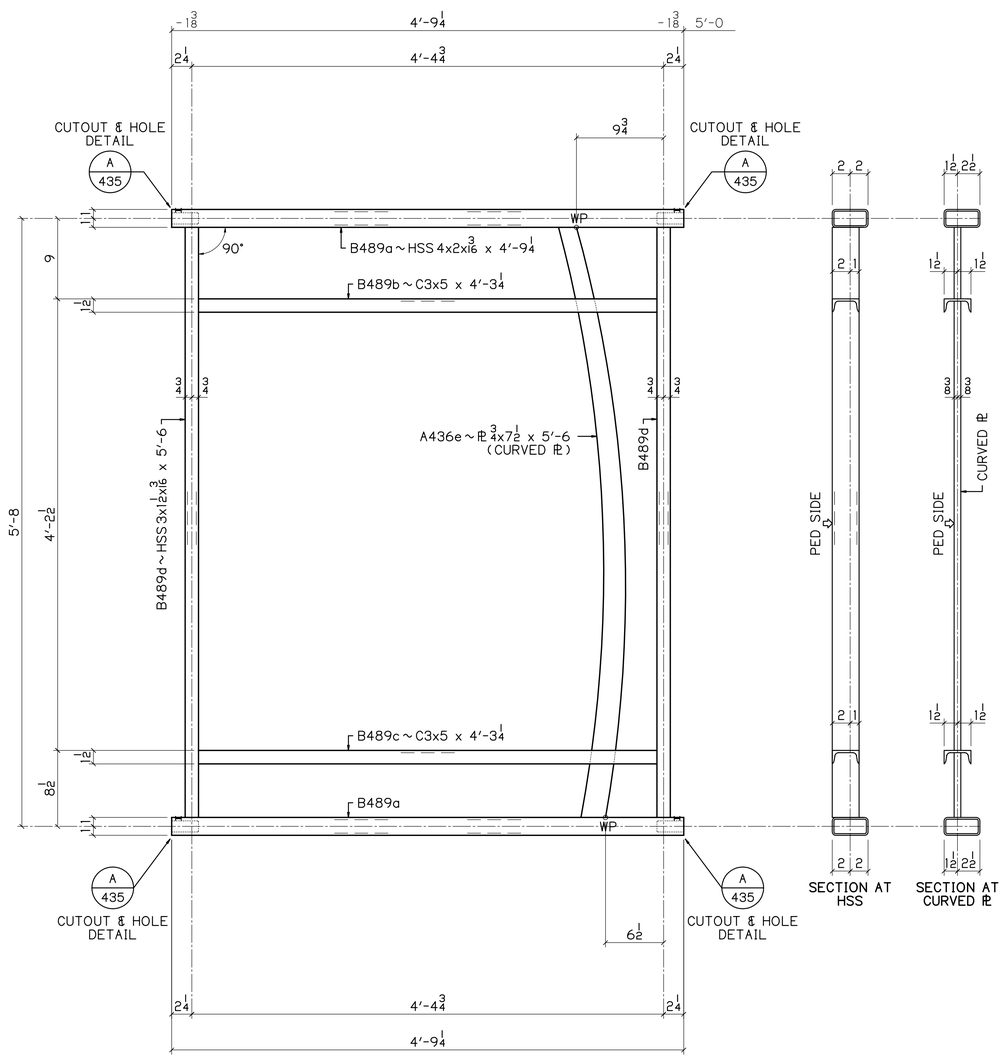

1 ~ B489

RAIL PANELS
PEDESTRIAN SIDE SHOWN
LEVEL

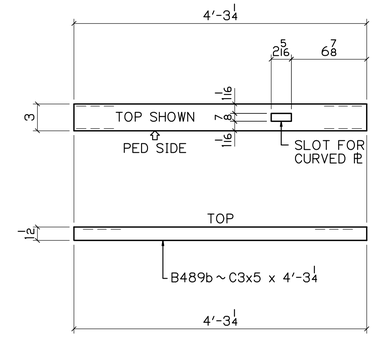

DETAIL OF B489b

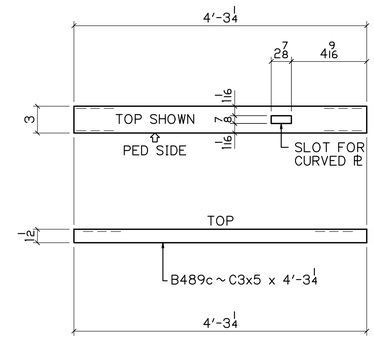

DETAIL OF B489c

BILL OF MATERIAL

NO	MK	NO	SUBMK	MATERIAL	FT	IN	REMARKS	SORT
1	B489			RAIL PANELS				MM
		2	B489a	HSS 4x2x3/16	4	9 1/4	SC2E	TS
		1	B489b	C3x5	4	3 1/4	SC2E	C
		1	B489c	C3x5	4	3 1/4	SC2E	C
		2	B489d	HSS 3x1 1/2x3/16	5	6	SC2E	TS
		1	A436e	PL 3/4x7 1/2	5	6	CURVED PL	PL

BU-25 EAST 89TH STREET

100% COMPLETE 08-16-21

P.H. DREW INC.
2450 N. RACEWAY RD. - P.O. BOX 34295
INDIANAPOLIS, INDIANA 46234
PHONE : (317) 297-5152
FAX : (317) 297-5313

APPROVAL: APPROVED 08-03-21

CUY-IR490 / SR010-2.09 / 19.28

DECORATIVE FENCE

RAIL PANELS

REVISION

REV	DATE	DESCRIPTION	BY

STATE	OHIO
COUNTY	CUYAHOGA (CITY OF CLEVELAND)
PROJECT	3000 (17)
CONTRACT	PID 96833
SECTION	
STRUCTURE	
STATE JOB	

APPROVAL RECORD

DATE	ISSUED	APP DATE	APPROVAL STATUS
08-16-21	FABRICATION		

CUSTOMER	LAKE ERIE CONSTRUCTION COMPANY
CONTRACTOR	
ARCH/ENG	
REFERENCE	
ITEM	
FINISH	SEE NOTES - SHT E400

DRAWN BY	CHECKED BY	MRH NO	JOB MGR	DWG STATUS	JOB NO.	TOTAL SHEETS	SHEET
MRH 07-21-21	SRF 08-12-21	1914	JL	FABRICATION 08-16-21	19-1108		489B

LEV

SEE SHT 435 FOR DETAILS

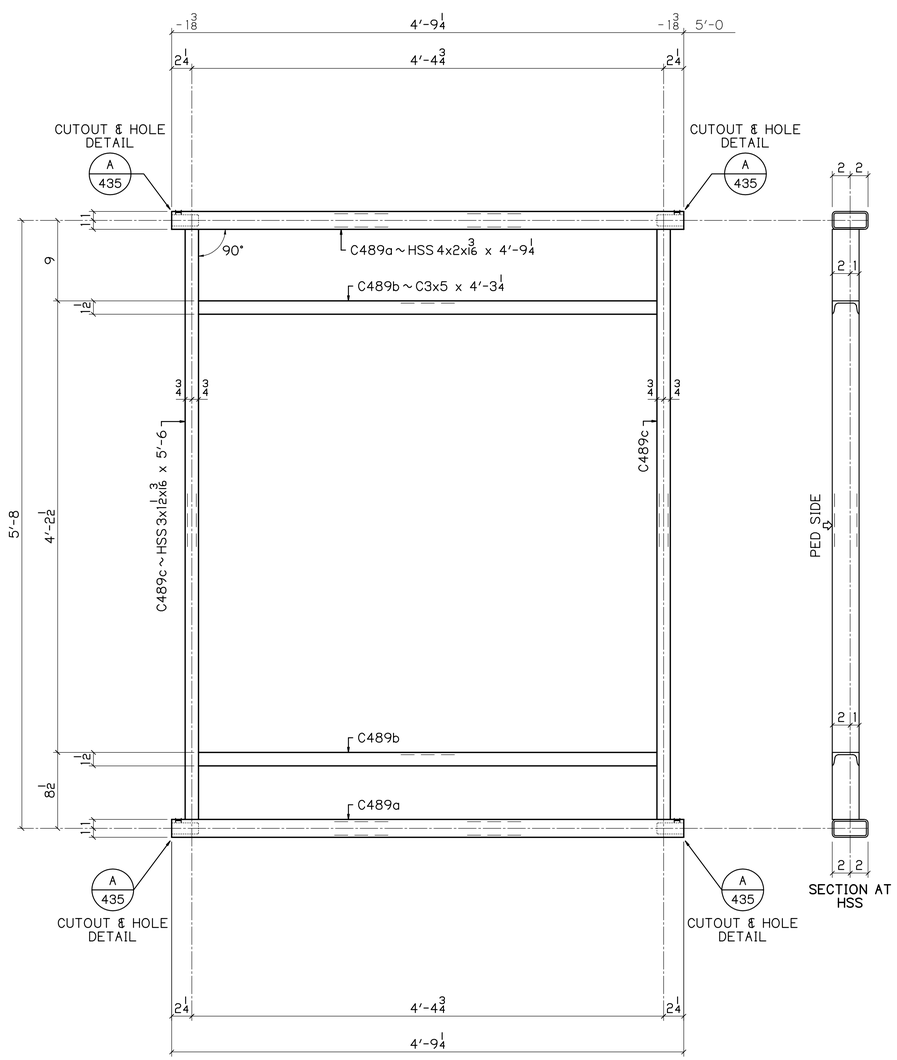

5 ~ C489

RAIL PANELS
PEDESTRIAN SIDE SHOWN
LEVEL

SEE SHT 435 FOR DETAILS

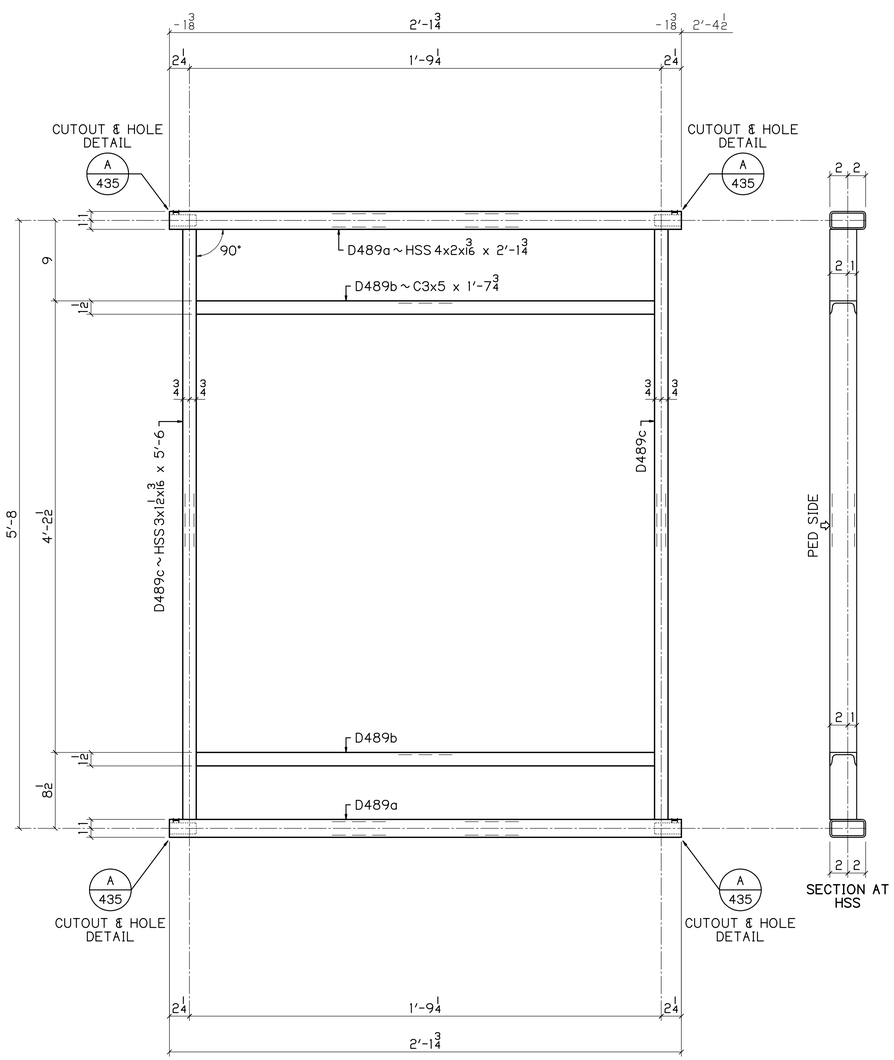

1 ~ D489

RAIL PANELS
PEDESTRIAN SIDE SHOWN
LEVEL

LEV

BILL OF MATERIAL

NO	MK	NO	SUBMK	MATERIAL	FT	IN	REMARKS	SORT
5	C489			RAIL PANELS				MM
		10	C489a	HSS 4x2x3/16	4	9 1/4	SC2E	TS
		10	C489b	C3x5	4	3 1/4	SC2E	C
		10	C489c	HSS 3x1 1/2x3/16	5	6	SC2E	TS
1	D489			RAIL PANELS				MM
		2	D489a	HSS 4x2x3/16	2	14 3/4	SC2E	TS
		2	D489b	C3x5	1	7 3/4	SC2E	C
		2	D489c	HSS 3x1 1/2x3/16	5	6	SC2E	TS

BU-25 EAST 89TH STREET

100% COMPLETE 08-16-21

P.H. DREW INC.
2450 N. RACEWAY RD. - P.O. BOX 34295
INDIANAPOLIS, INDIANA 46234
PHONE : (317) 297-5152
FAX : (317) 297-5313

APPROVAL: APPROVED 08-03-21

CUY-IR490 / SR010-2.09 / 19.28

DECORATIVE FENCE

RAIL PANELS

REVISION

REV	DATE	DESCRIPTION	BY
1	08-17-21	REV D489 QUANTITY	MRH

APPROVAL RECORD

DATE	ISSUED	APP DATE	APPROVAL STATUS
08-16-21	FABRICATION		

STATE	OHIO
COUNTY	CUYAHOGA (CITY OF CLEVELAND)
PROJECT	3000 (17)
CONTRACT	PID 96833
SECTION	
STRUCTURE	
STATE JOB	
CUSTOMER	LAKE ERIE CONSTRUCTION COMPANY
CONTRACTOR	
ARCH/ENG	
REFERENCE	
ITEM	
FINISH	SEE NOTES - SHT E400

DRAWN BY	CHECKED BY	MRH NO	JOB MGR	DWG STATUS	JOB NO.	TOTAL SHEETS	SHEET
MRH 07-21-21	SRF 08-12-21	1914	JL	FABRICATION 08-16-21	19-1108		489C

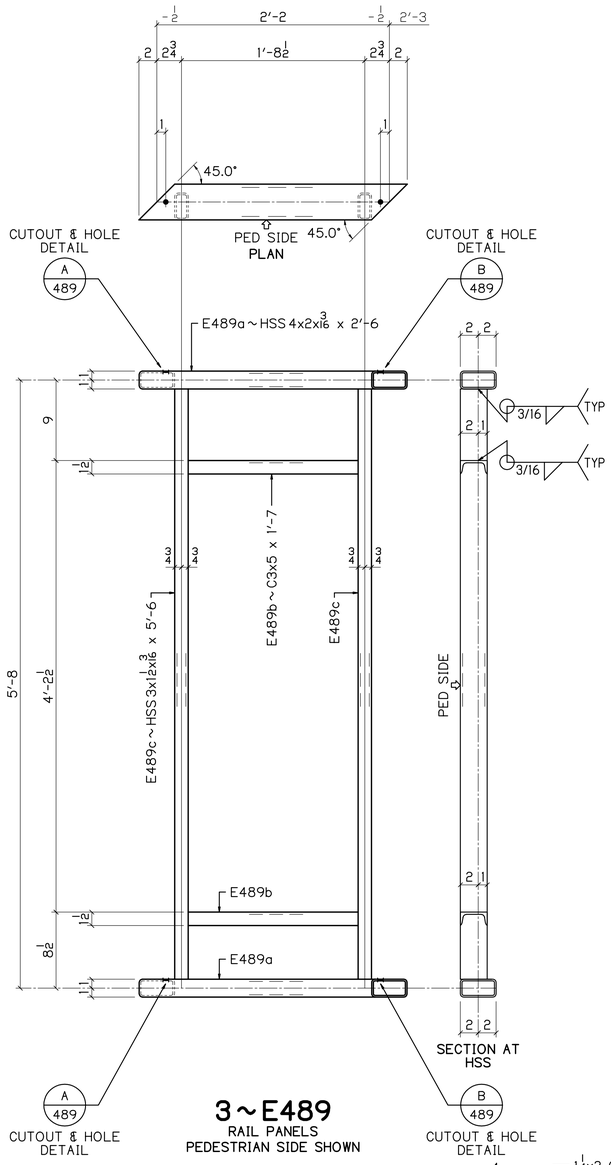

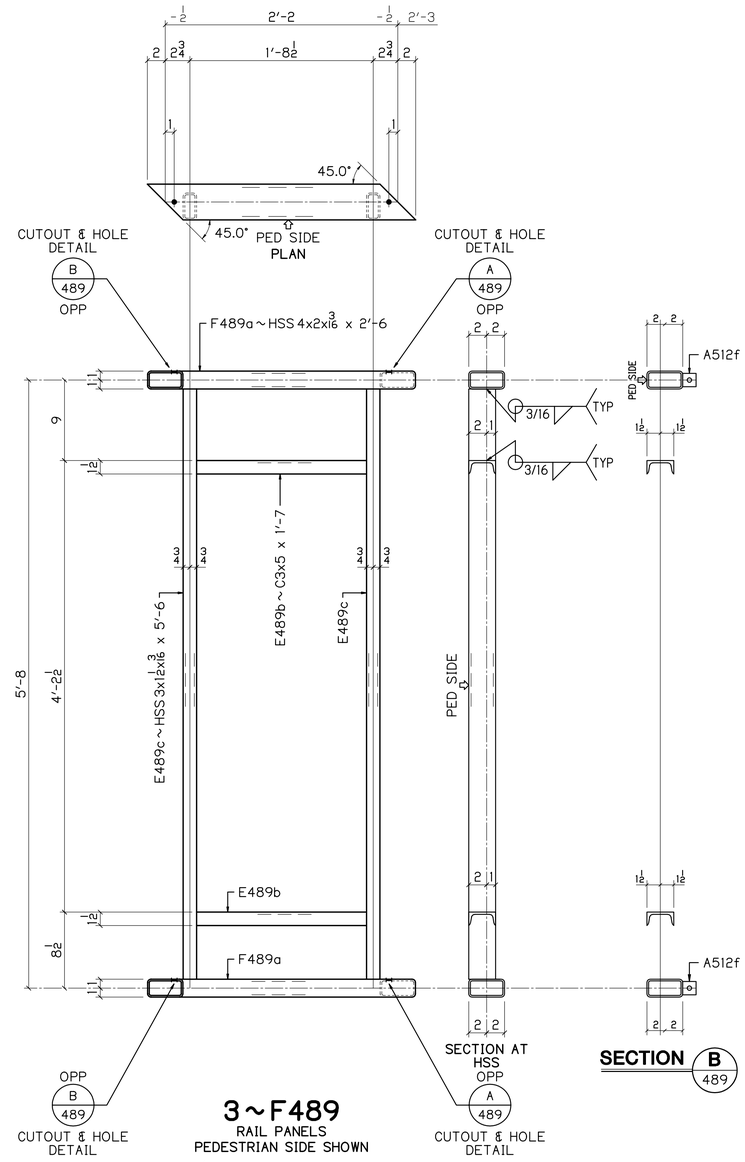

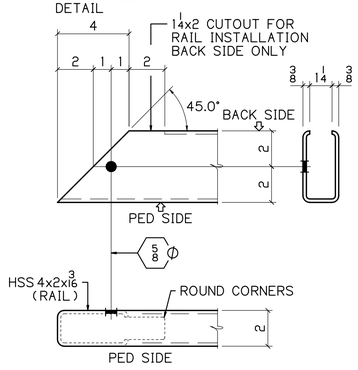

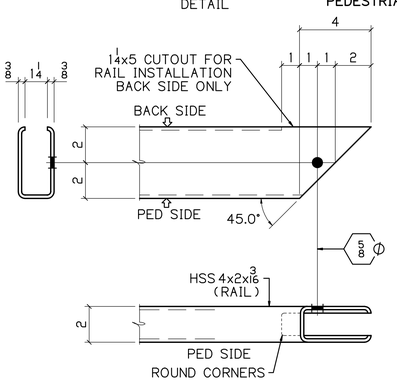

BILL OF MATERIAL

NO	MK	NO	SUBMK	MATERIAL	FT	IN	REMARKS	SORT
2	E489			RAIL PANELS				MM
		6	E489a	HSS 4x2x3/16	2	6	BC2E	TS
		6	E489b	C3x5	1	7	SC2E	C
		6	E489c	HSS 3x1 1/2x3/16	5	6	SC2E	TS
2	F489			RAIL PANELS				MM
		6	F489a	HSS 4x2x3/16	2	6	BC2E	TS
		6	E489b	C3x5	1	7	SC2E	C
		6	E489c	HSS 3x1 1/2x3/16	5	6	SC2E	TS

BU-25 EAST 89TH STREET

100% COMPLETE 08-16-21

P.H. DREW INC.
2450 N. RACEWAY RD. - P.O. BOX 34295
INDIANAPOLIS, INDIANA 46234
PHONE : (317) 297-5152
FAX : (317) 297-5313

APPROVAL: APPROVED 08-03-21

CUY-IR490 / SR010-2.09 / 19.28

DECORATIVE FENCE

RAIL PANELS

REVISION

REV	DATE	DESCRIPTION	BY
1	08-17-21	REV QUANTITIES	MRH

APPROVAL RECORD

DATE	ISSUED	APP DATE	APPROVAL STATUS
08-16-21	FABRICATION		

STATE	OHIO
COUNTY	CUYAHOGA (CITY OF CLEVELAND)
PROJECT	3000 (17)
CONTRACT	PID 96833
SECTION	
STRUCTURE	
STATE JOB	
CUSTOMER	LAKE ERIE CONSTRUCTION COMPANY
CONTRACTOR	
ARCH/ENG	
REFERENCE	
ITEM	
FINISH	SEE NOTES-SHT E400

DRAWN BY	CHECKED BY	MRH NO	JOB MGR	DWG STATUS	JOB NO.	TOTAL SHEETS	SHEET
MRH 07-21-21	SRF 08-12-21	1914	JL	FABRICATION 08-16-21	19-1108		489D

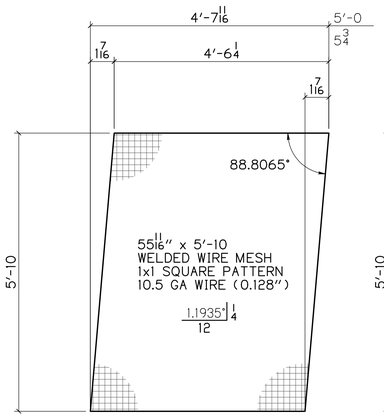

154 ~ A490
WIRE MESH PANEL

QUAN	MARK
10	A436
11	A437
7	A438
6	A439
54	A446
34	A448
2	A473
2	A474

QUAN	MARK
3	A479
3	A480
9	A483
13	A485

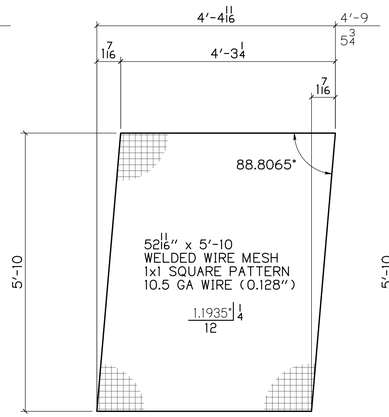

7 ~ B490
WIRE MESH PANEL

QUAN	MARK
1	A444
6	A447

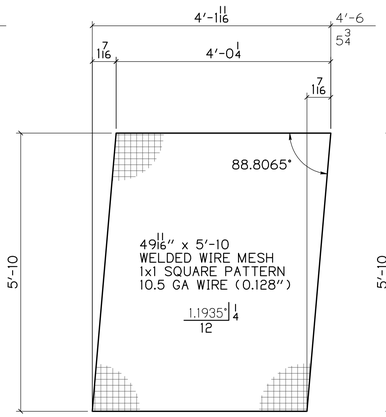

21 ~ C490
WIRE MESH PANEL

QUAN	MARK
1	A441
1	A442
7	A449
1	A475
1	A476
1	A481
1	A482
6	B483

QUAN	MARK
2	B485

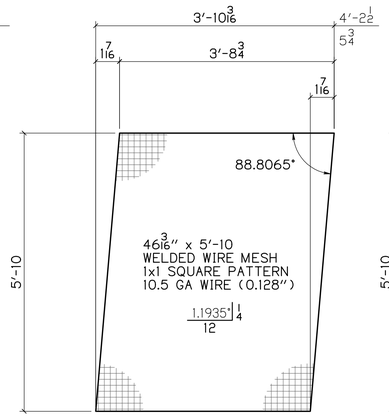

1 ~ D490
WIRE MESH PANEL

QUAN	MARK
1	A486

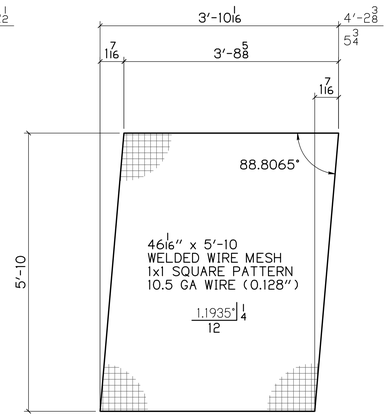

4 ~ E490
WIRE MESH PANEL

QUAN	MARK
1	A477
1	A478
2	A484

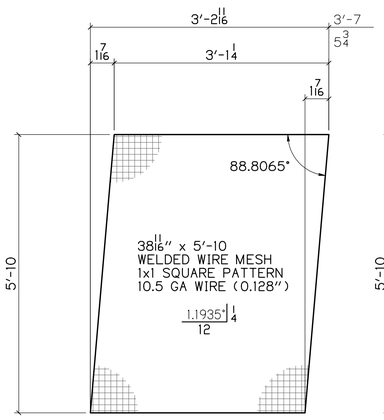

1 ~ F490
WIRE MESH PANEL

QUAN	MARK
1	A443

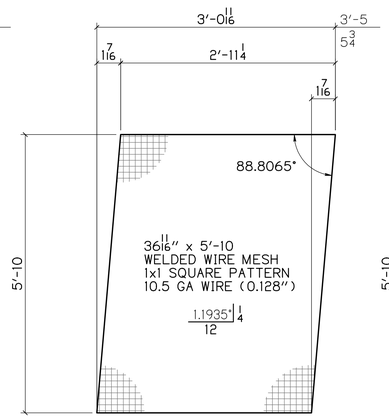

1 ~ G490
WIRE MESH PANEL

QUAN	MARK
1	B484

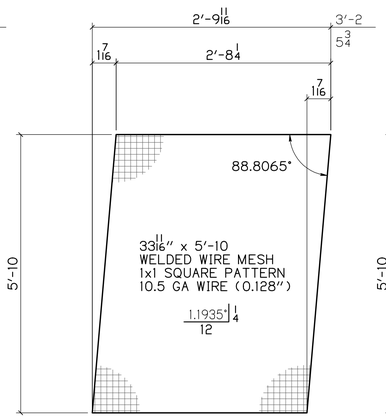

1 ~ H490
WIRE MESH PANEL

QUAN	MARK
1	A440

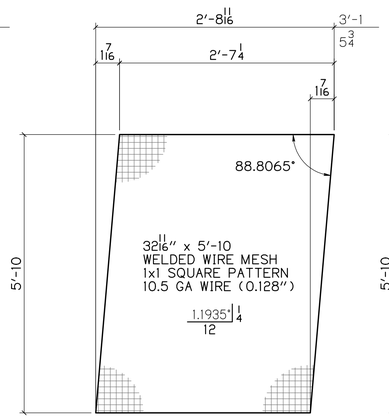

1 ~ K490
WIRE MESH PANEL

QUAN	MARK
1	A445

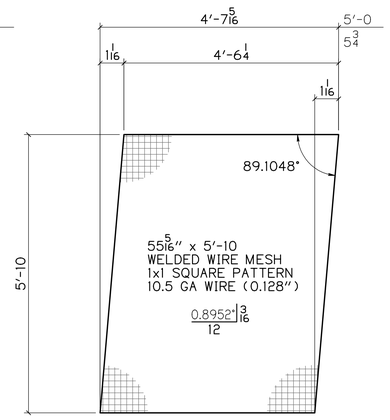

42 ~ M490
WIRE MESH PANEL

QUAN	MARK
2	A450
2	A451
2	A452
2	A453
10	A454
10	A455
1	A487
1	B487

QUAN	MARK
1	C487
1	D487
5	E487
5	F487

BILL OF MATERIAL

NO	MK	NO	SUBMK	MATERIAL	FT	IN	REMARKS	SORT
154	A490			1x1 WIRE MESH 55 11/16″ x	5	10	WELDED WIRE	MI
7	B490			1x1 WIRE MESH 52 1/16″ x	5	10	WELDED WIRE	MI
21	C490			1x1 WIRE MESH 49 11/16″ x	5	10	WELDED WIRE	MI
1	D490			1x1 WIRE MESH 46 3/16″ x	5	10	WELDED WIRE	MI
4	E490			1x1 WIRE MESH 46 1/16″ x	5	10	WELDED WIRE	MI
1	F490			1x1 WIRE MESH 38 11/16″ x	5	10	WELDED WIRE	MI
1	G490			1x1 WIRE MESH 36 11/16″ x	5	10	WELDED WIRE	MI
1	H490			1x1 WIRE MESH 33 11/16″ x	5	10	WELDED WIRE	MI
1	K490			1x1 WIRE MESH 32 11/16″ x	5	10	WELDED WIRE	MI
42	M490			1x1 WIRE MESH 55 5/16″ x	5	10	WELDED WIRE	MI

BU-19 BLUE-GREEN LINES
100% COMPLETE 08-16-21

P.H. DREW INC.
2450 N. RACEWAY RD. - P.O. BOX 34295
INDIANAPOLIS, INDIANA 46234
PHONE : (317) 297-5152
FAX : (317) 297-5313

APPROVAL
APPROVED 08-03-21

CUY-IR490 / SR010-2.09 / 19.28
DECORATIVE FENCE
WIRE MESH

REVISION

REV	DATE	DESCRIPTION	BY

APPROVAL RECORD

DATE	ISSUED	APP DATE	APPROVAL STATUS
08-16-21	FABRICATION		

STATE	OHIO
COUNTY	CUYAHOGA (CITY OF CLEVELAND)
PROJECT	3000 (17)
CONTRACT	PID 96833
SECTION	
STRUCTURE	
STATE JOB	
CUSTOMER	LAKE ERIE CONSTRUCTION COMPANY
CONTRACTOR	
ARCH/ENG	
REFERENCE	
ITEM	
FINISH	SEE NOTES-SHT E400

DRAWN BY	CHECKED BY	MRH NO	JOB MGR	DWG STATUS	JOB NO.	TOTAL SHEETS	SHEET
MRH 07-11-21	SRF 08-12-21	1914	JL	FABRICATION 08-16-21	19-1108		490

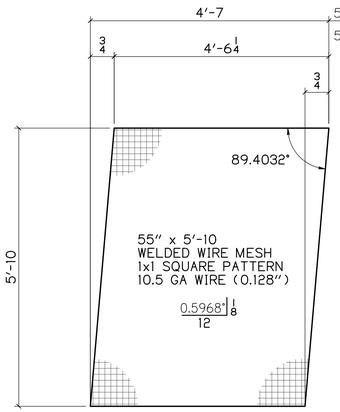

42 ~ A491
WIRE MESH PANEL

QUAN	MARK
2	A456
2	A457
3	A460
3	A461
10	A462
15	A464
1	A488
1	B488

QUAN	MARK
5	E488

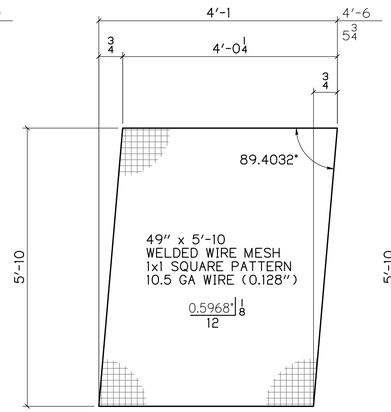

17 ~ B491
WIRE MESH PANEL

QUAN	MARK
1	A458
1	A459
7	A463
1	C488
1	D488
6	F488

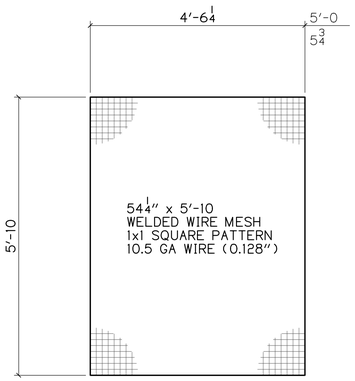

42 ~ C491
WIRE MESH PANEL

QUAN	MARK
5	A465
5	A466
25	A469
1	A489
1	B489
5	C489

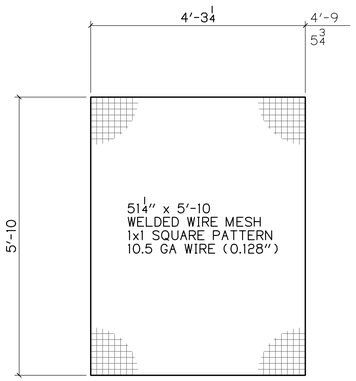

7 ~ D491
WIRE MESH PANEL

QUAN	MARK
1	A467
6	A470

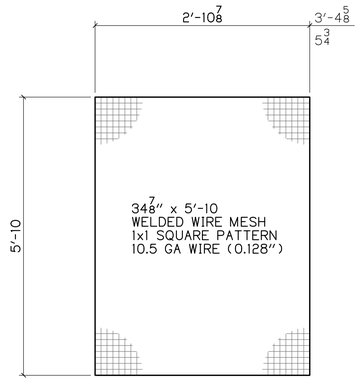

1 ~ E491
WIRE MESH PANEL

QUAN	MARK
1	A468

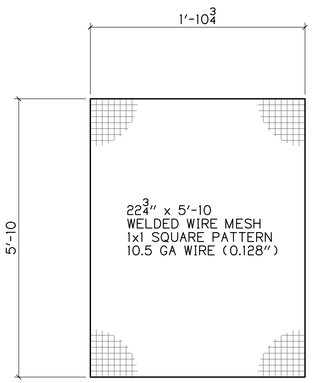

2 ~ F491
WIRE MESH PANEL

1

QUAN	MARK
1	A471
1	D489

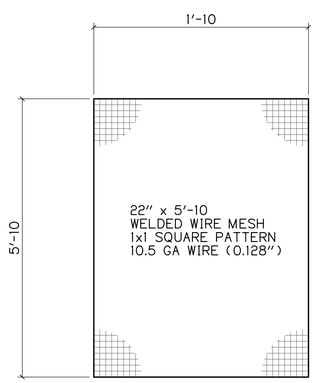

12 ~ G491
WIRE MESH PANEL

QUAN	MARK
3	A472
3	B472
3	E489
3	F489

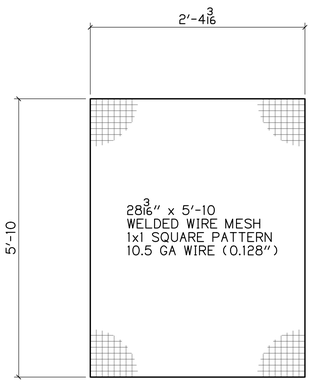

1 ~ H491
WIRE MESH PANEL

QUAN	MARK
1	A424

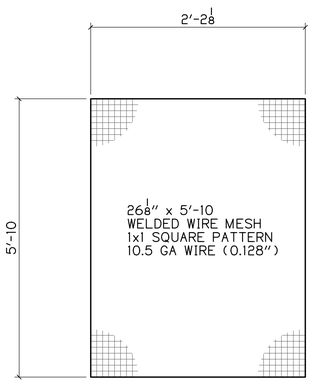

1 ~ K491
WIRE MESH PANEL

QUAN	MARK
1	A425

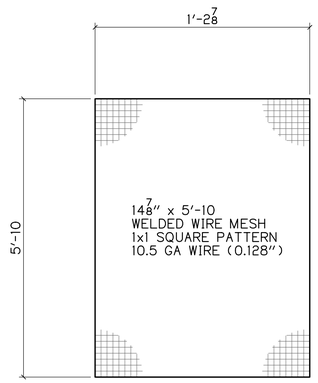

1 ~ M491
WIRE MESH PANEL

QUAN	MARK
1	A432

BILL OF MATERIAL

NO	MK	NO	SUBMK	MATERIAL	FT	IN	REMARKS	SORT
42	A491			1x1 WIRE MESH 55″ x	5	10	WELDED WIRE	MI
17	B491			1x1 WIRE MESH 49″ x	5	10	WELDED WIRE	MI
42	C491			1x1 WIRE MESH 54 1/4″ x	5	10	WELDED WIRE	MI
7	D491			1x1 WIRE MESH 51 1/4″ x	5	10	WELDED WIRE	MI
1	E491			1x1 WIRE MESH 34 7/8″ x	5	10	WELDED WIRE	MI
2	F491			1x1 WIRE MESH 22 3/4″ x	5	10	WELDED WIRE	MI
12	G491			1x1 WIRE MESH 22″ x	5	10	WELDED WIRE	MI
1	H491			1x1 WIRE MESH 28 3/16″ x	5	10	WELDED WIRE	MI
1	K491			1x1 WIRE MESH 26 1/8″ x	5	10	WELDED WIRE	MI
1	M491			1x1 WIRE MESH 14 7/8″ x	5	10	WELDED WIRE	MI

BU-19 BLUE-GREEN LINES
100% COMPLETE 08-16-21

P.H. DREW INC.
2450 N. RACEWAY RD. - P.O. BOX 34295
INDIANAPOLIS, INDIANA 46234
PHONE : (317) 297-5152
FAX : (317) 297-5313

APPROVAL
APPROVED 08-03-21

CUY-IR490 / SR010-2.09 / 19.28
DECORATIVE FENCE
WIRE MESH

REVISION

REV	DATE	DESCRIPTION	BY
1	08-10-21	REV WIRE MESH	MRH

APPROVAL RECORD

DATE	ISSUED	APP DATE	APPROVAL STATUS
08-16-21	FABRICATION		

STATE	OHIO
COUNTY	CUYAHOGA (CITY OF CLEVELAND)
PROJECT	3000 (17)
CONTRACT	PID 96833
SECTION	
STRUCTURE	
STATE JOB	
CUSTOMER	LAKE ERIE CONSTRUCTION COMPANY
CONTRACTOR	
ARCH/ENG	
REFERENCE	
ITEM	
FINISH	SEE NOTES-SHT E400

DRAWN BY	CHECKED BY	MRH NO	JOB MGR	DWG STATUS	JOB NO.	TOTAL SHEETS	SHEET
MRH 07-11-21	SRF 08-12-21	1914	JL	FABRICATION 08-16-21	19-1108		491

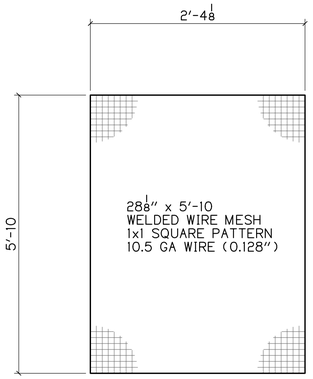

1 ~ A492
WIRE MESH PANEL

QUAN	MARK
1	A434

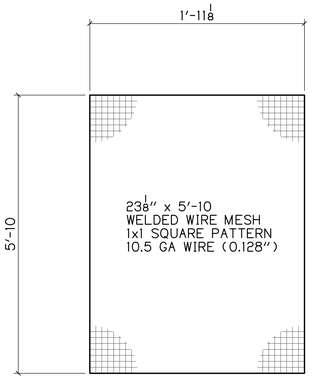

1 ~ B492
WIRE MESH PANEL

QUAN	MARK
1	A433

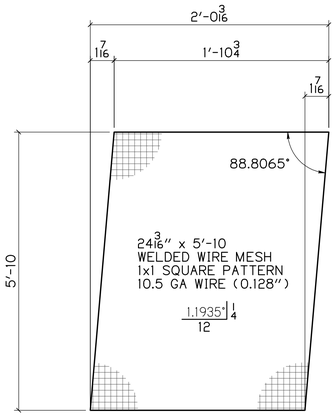

4 ~ C492
WIRE MESH PANEL

1

QUAN	MARK
2	xx
2	xx

BILL OF MATERIAL

NO	MK	NO	SUBMK	MATERIAL	FT	IN	REMARKS	SORT
1	A492			1x1 WIRE MESH 28 1/8" x	5	10	WELDED WIRE	MI
1	B492			1x1 WIRE MESH 23 1/8" x	5	10	WELDED WIRE	MI
4	C492			1x1 WIRE MESH 24 3/16" x	5	10	WELDED WIRE	MI

BU-19 BLUE-GREEN LINES
100% COMPLETE 08-16-21

P.H. DREW INC.
2450 N. RACEWAY RD. - P.O. BOX 34295
INDIANAPOLIS, INDIANA 46234
PHONE : (317) 297-5152
FAX : (317) 297-5313

APPROVAL
APPROVED 08-03-21

CUY-IR490 / SR010-2.09 / 19.28
DECORATIVE FENCE
WIRE MESH

REVISION

REV	DATE	DESCRIPTION	BY
1	08-10-21	REV WIRE MESH	MRH

APPROVAL RECORD

DATE	ISSUED	APP DATE	APPROVAL STATUS
08-16-21	FABRICATION		

STATE	OHIO
COUNTY	CUYAHOGA (CITY OF CLEVELAND)
PROJECT	3000 (17)
CONTRACT	PID 96833
SECTION	
STRUCTURE	
STATE JOB	
CUSTOMER	LAKE ERIE CONSTRUCTION COMPANY
CONTRACTOR	
ARCH/ENG	
REFERENCE	
ITEM	
FINISH	SEE NOTES-SHT E400

DRAWN BY	CHECKED BY	MRH NO	JOB MGR	DWG STATUS	JOB NO.	TOTAL SHEETS	SHEET
MRH 07-11-21	SRF 08-12-21	1914	JL	FABRICATION 08-16-21	19-1108		492

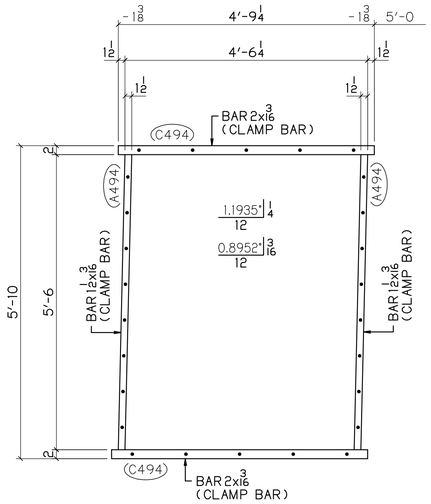

CLAMP BARS FOR RAIL PANELS

196 ~ RAIL PANELS

QUAN	MARK
10	A436
11	A437
7	A438
6	A439
54	A446
34	A448
2	A473
2	A474

QUAN	MARK
2	A450
2	A451
2	A452
2	A453
10	A454
10	A455
3	A479
3	A480

QUAN	MARK
9	A483
13	A485
1	A487
1	B487
1	C487
1	D487
5	E487
5	F487

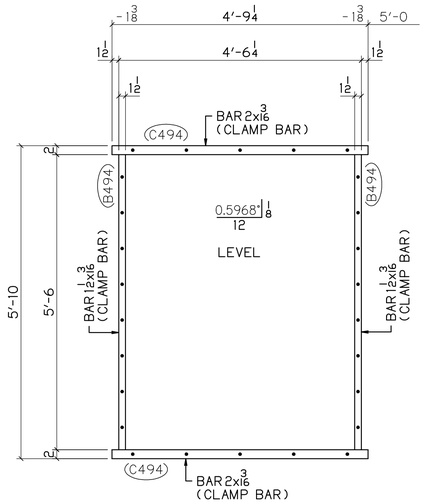

CLAMP BARS FOR RAIL PANELS

84 ~ RAIL PANELS

QUAN	MARK
2	A456
2	A457
3	A460
3	A461
10	A462
15	A464
5	A465
5	A466

QUAN	MARK
25	A469
1	A488
1	B488
5	E488
1	A489
1	B489
5	C489

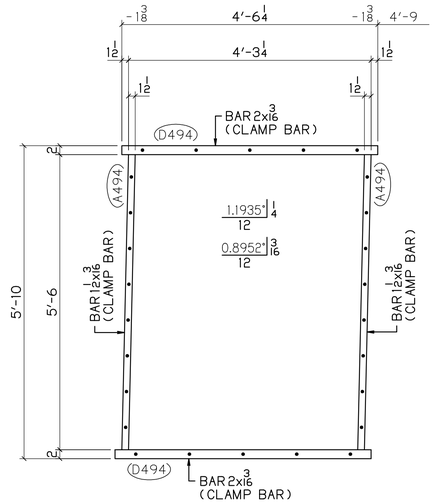

CLAMP BARS FOR RAIL PANELS

7 ~ RAIL PANELS

QUAN	MARK
1	A444
6	A447

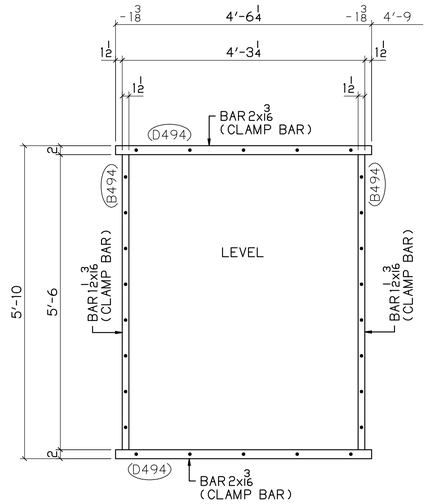

CLAMP BARS FOR RAIL PANELS

7 ~ RAIL PANELS

QUAN	MARK
1	A467
6	A470

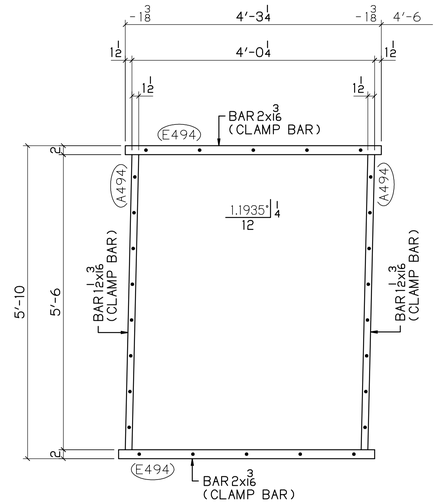

CLAMP BARS FOR RAIL PANELS

21 ~ RAIL PANELS

QUAN	MARK
1	A441
1	A442
7	A449
1	A475
1	A476
1	A481
1	A482
6	B483

QUAN	MARK
2	B485

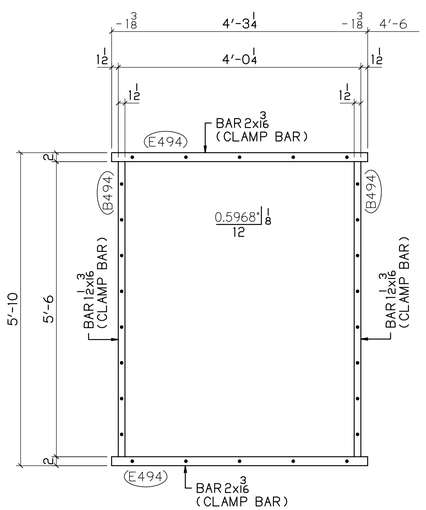

CLAMP BARS FOR RAIL PANELS

17 ~ RAIL PANELS

QUAN	MARK
1	A458
1	A459
7	A463

QUAN	MARK
1	C488
1	D488
6	F488

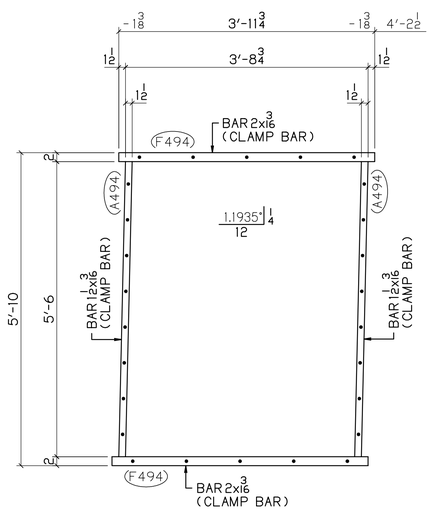

CLAMP BARS FOR RAIL PANELS

1 ~ RAIL PANELS

QUAN	MARK
1	A486

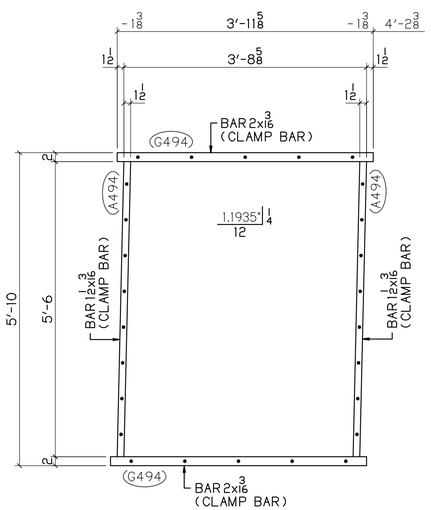

CLAMP BARS FOR RAIL PANELS

4 ~ RAIL PANELS

QUAN	MARK
1	A477
1	A478
2	A484

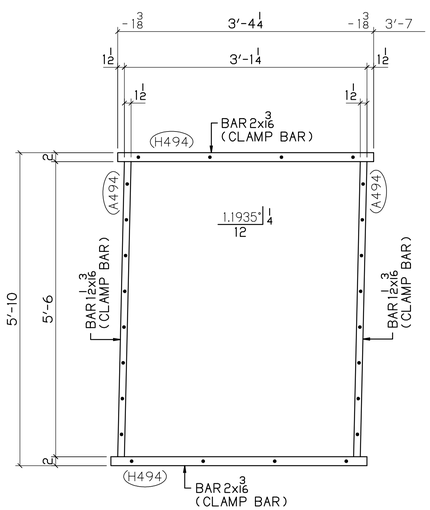

CLAMP BARS FOR RAIL PANELS

1 ~ RAIL PANELS

QUAN	MARK
1	A443

BU-19 BLUE-GREEN LINES
FOR CHECK 07-21-21

P.H. DREW INC.
2450 N. RACEWAY RD. - P.O. BOX 34295
INDIANAPOLIS, INDIANA 46234
PHONE : (317) 297-5152
FAX : (317) 297-5313

APPROVAL: APPROVED 08-03-21

CUY-IR490 / SR010-2.09 / 19.28
DECORATIVE FENCE
CLAMP BARS

REVISION

REV	DATE	DESCRIPTION	BY

STATE	OHIO
COUNTY	CUYAHOGA (CITY OF CLEVELAND)
PROJECT	3000 (17)
CONTRACT	PID 96833
SECTION	
STRUCTURE	
STATE JOB	

APPROVAL RECORD

DATE	ISSUED	APP DATE	APPROVAL STATUS
08-16-21	FABRICATION		

CUSTOMER	LAKE ERIE CONSTRUCTION COMPANY
CONTRACTOR	
ARCH/ENG	
REFERENCE	
ITEM	
FINISH	SEE NOTES - SHT E400

DRAWN BY	CHECKED BY	MRH NO	JOB MGR	DWG STATUS	JOB NO.	TOTAL SHEETS	SHEET
MRH 07-21-21	SRF 08-12-21	1914	JL	FABRICATION 08-16-21	19-1108		493A

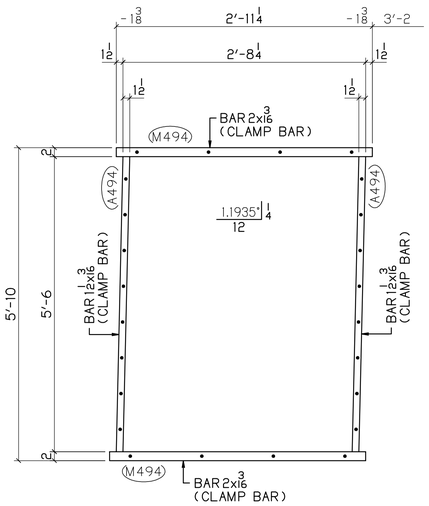

CLAMP BARS FOR RAIL PANELS

1 ~ RAIL PANELS

QUAN	MARK
1	A440

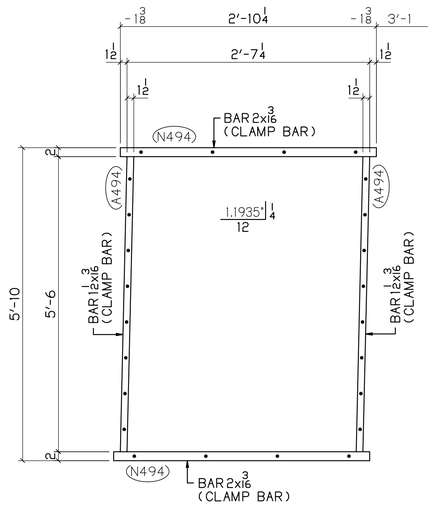

CLAMP BARS FOR RAIL PANELS

1 ~ RAIL PANELS

QUAN	MARK
1	A445

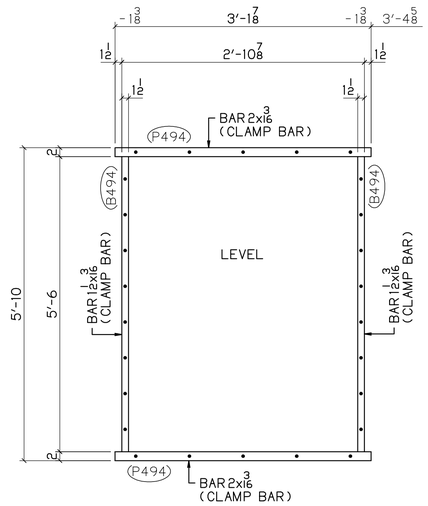

CLAMP BARS FOR RAIL PANELS

1 ~ RAIL PANELS

QUAN	MARK
1	A468

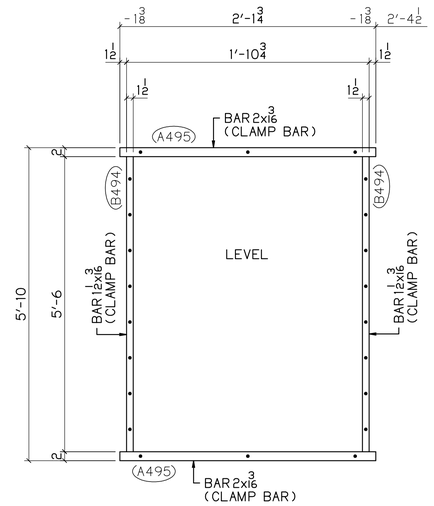

CLAMP BARS FOR RAIL PANELS

6 ~ RAIL PANELS

QUAN	MARK
3	A471
3	D489

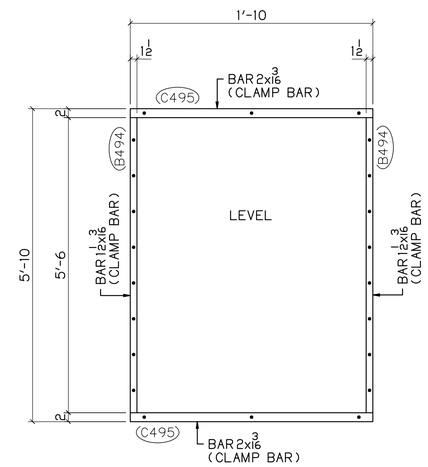

CLAMP BARS FOR RAIL PANELS

12 ~ RAIL PANELS

QUAN	MARK	QUAN	MARK
3	A472	3	F489
3	B472		
3	E489		

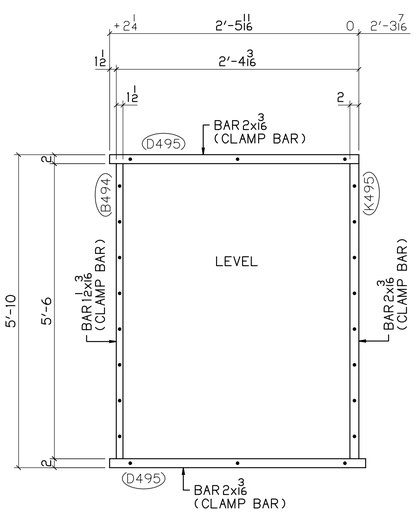

CLAMP BARS FOR RAIL PANELS

1 ~ RAIL PANELS

QUAN	MARK
1	A424

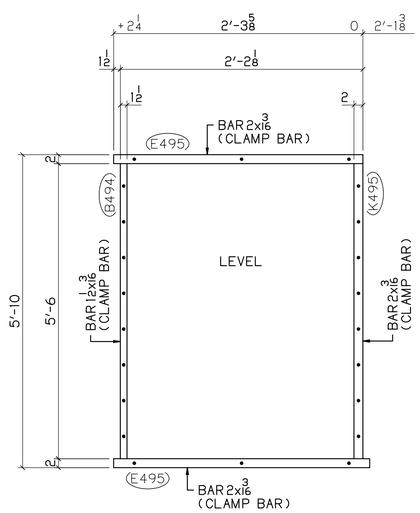

CLAMP BARS FOR RAIL PANELS

1 ~ RAIL PANELS

QUAN	MARK
1	A425

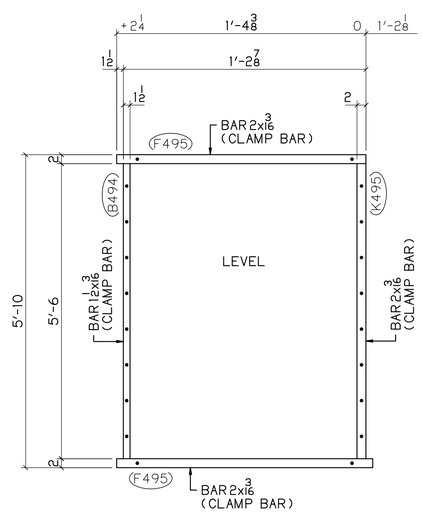

CLAMP BARS FOR RAIL PANELS

1 ~ RAIL PANELS

QUAN	MARK
1	A432

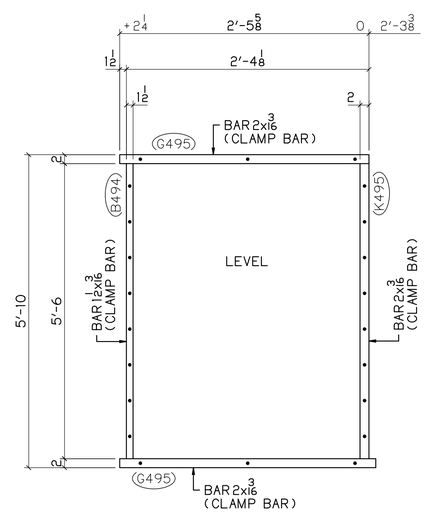

CLAMP BARS FOR RAIL PANELS

1 ~ RAIL PANELS

QUAN	MARK
1	A434

BU-19 BLUE-GREEN LINES

100% COMPLETE 08-16-21

P.H. DREW INC.

2450 N. RACEWAY RD. - P.O. BOX 34295
INDIANAPOLIS, INDIANA 46234

PHONE : (317) 297-5152
FAX : (317) 297-5313

APPROVAL: APPROVED 08-03-21

CUY-IR490 / SR010-2.09 / 19.28

DECORATIVE FENCE

CLAMP BARS

REVISION

REV	DATE	DESCRIPTION	BY

APPROVAL RECORD

DATE	ISSUED	APP DATE	APPROVAL STATUS
08-16-21	FABRICATION		

STATE	OHIO
COUNTY	CUYAHOGA (CITY OF CLEVELAND)
PROJECT	3000 (17)
CONTRACT	PID 96833
SECTION	
STRUCTURE	
STATE JOB	
CUSTOMER	LAKE ERIE CONSTRUCTION COMPANY
CONTRACTOR	
ARCH/ENG	
REFERENCE	
ITEM	
FINISH	SEE NOTES - SHT E400

DRAWN BY	CHECKED BY	MRH NO	JOB MGR	DWG STATUS	JOB NO.	TOTAL SHEETS	SHEET
MRH 07-21-21	SRF 08-12-21	1914	JL	FABRICATION 08-16-21	19-1108		493B

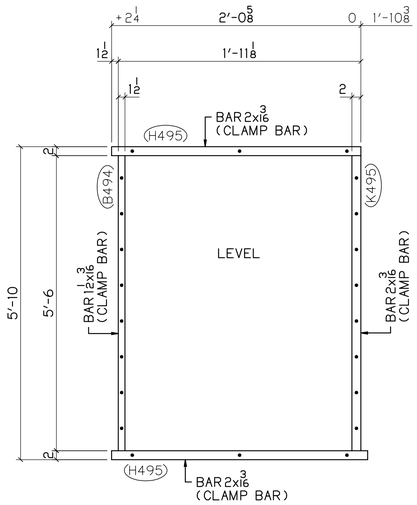

CLAMP BARS FOR RAIL PANELS

1 ~ RAIL PANELS

QUAN	MARK
1	A433

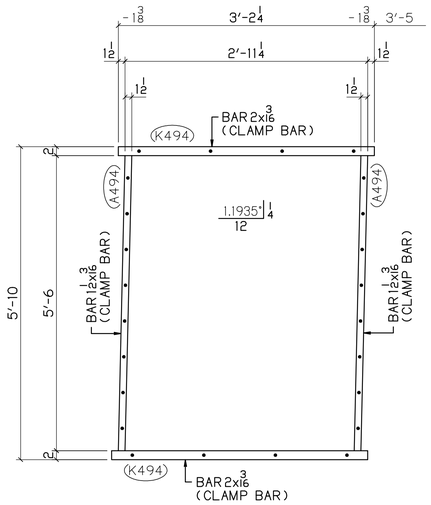

CLAMP BARS FOR RAIL PANELS

1 ~ RAIL PANELS

QUAN	MARK
1	B484

BU-19 BLUE-GREEN LINES

100% COMPLETE 08-16-21

P.H. DREW INC.

2450 N. RACEWAY RD. - P.O. BOX 34295
INDIANAPOLIS, INDIANA 46234

PHONE : (317) 297-5152
FAX : (317) 297-5313

APPROVAL

APPROVED 08-03-21

CUY-IR490 / SR010-2.09 / 19.28

DECORATIVE FENCE

CLAMP BARS

REVISION

REV	DATE	DESCRIPTION	BY

APPROVAL RECORD

DATE	ISSUED	APP DATE	APPROVAL STATUS
08-16-21	FABRICATION		

STATE	OHIO
COUNTY	CUYAHOGA (CITY OF CLEVELAND)
PROJECT	3000 (17)
CONTRACT	PID 96833
SECTION	
STRUCTURE	
STATE JOB	
CUSTOMER	LAKE ERIE CONSTRUCTION COMPANY
CONTRACTOR	
ARCH/ENG	
REFERENCE	
ITEM	
FINISH	SEE NOTES-SHT E400

DRAWN BY	CHECKED BY	MRH NO	JOB MGR	DWG STATUS	JOB NO.	TOTAL SHEETS	SHEET
MRH 07-21-21	SRF 08-12-21	1914	JL	FABRICATION 08-16-21	19-1108		493C

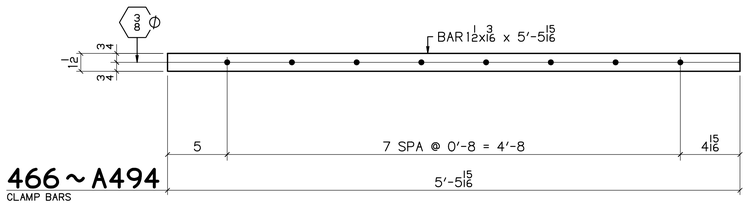

466 ~ A494
CLAMP BARS

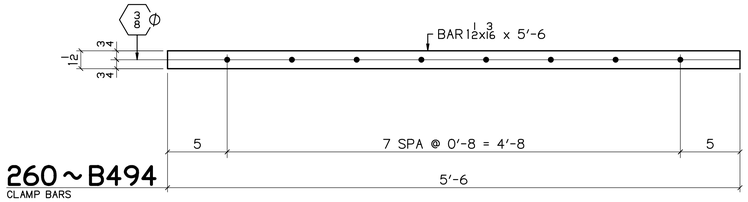

260 ~ B494
CLAMP BARS

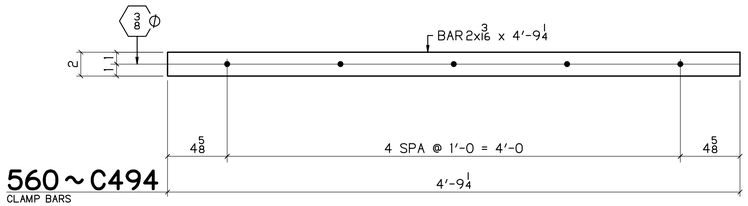

560 ~ C494
CLAMP BARS

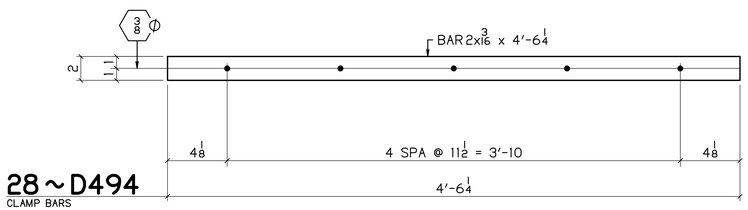

28 ~ D494
CLAMP BARS

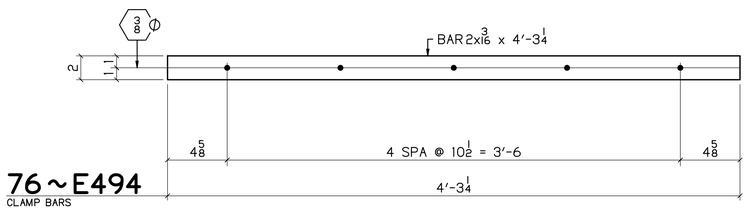

76 ~ E494
CLAMP BARS

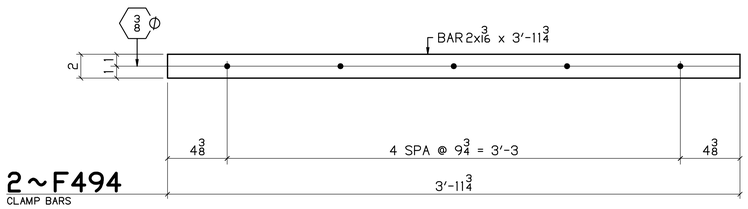

2 ~ F494
CLAMP BARS

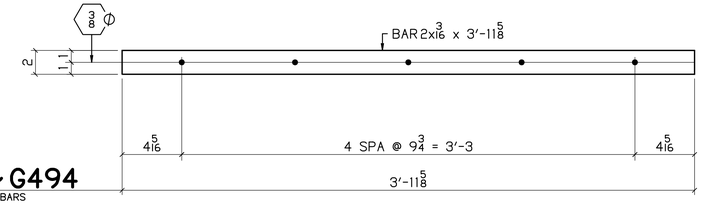

8 ~ G494
CLAMP BARS

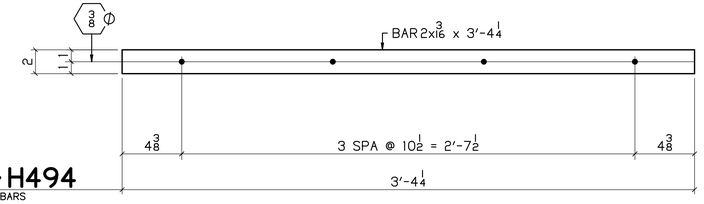

2 ~ H494
CLAMP BARS

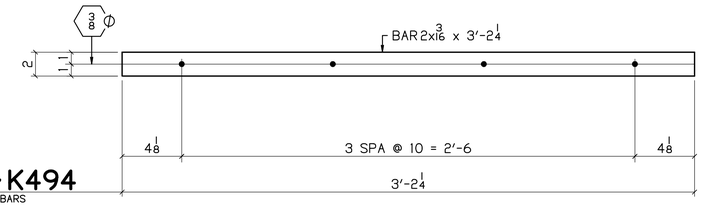

2 ~ K494
CLAMP BARS

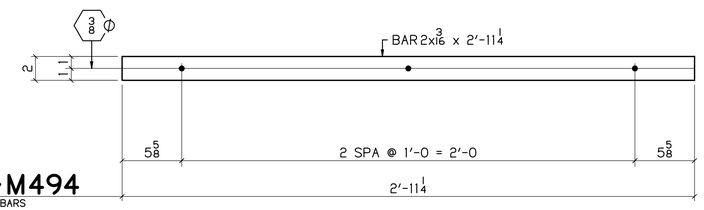

2 ~ M494
CLAMP BARS

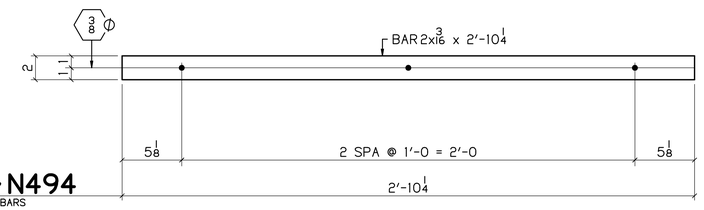

2 ~ N494
CLAMP BARS

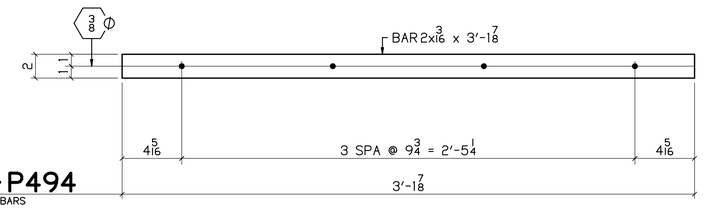

2 ~ P494
CLAMP BARS

BILL OF MATERIAL

NO	MK	NO	SUBMK	MATERIAL	FT	IN	REMARKS	SORT
466	A494			BAR 1 1/2 x 3/16	5	5 15/16	BC2E	B
260	B494			BAR 1 1/2 x 3/16	5	6	SC2E	B
560	C494			BAR 2 x 3/16	4	9 1/4	SC2E	B
28	D494			BAR 2 x 3/16	4	6 1/4	SC2E	B
76	E494			BAR 2 x 3/16	4	3 1/4	SC2E	B
2	F494			BAR 2 x 3/16	3	11 3/4	SC2E	B
8	G494			BAR 2 x 3/16	3	11 5/8	SC2E	B
2	H494			BAR 2 x 3/16	3	4 1/4	SC2E	B
2	K494			BAR 2 x 3/16	3	2 1/4	SC2E	B
2	M494			BAR 2 x 3/16	2	11 1/4	SC2E	B
2	N494			BAR 2 x 3/16	2	10 1/4	SC2E	B
2	P494			BAR 2 x 3/16	3	1 7/8	SC2E	B

BU-19 BLUE-GREEN LINES
100% COMPLETE 08-16-21

P.H. DREW INC.
2450 N. RACEWAY RD. - P.O. BOX 34295
INDIANAPOLIS, INDIANA 46234
PHONE : (317) 297-5152
FAX : (317) 297-5313

APPROVAL
APPROVED 08-03-21

CUY-IR490 / SR010-2.09 / 19.28

DECORATIVE FENCE

CLAMP BARS

REVISION	REV	DATE	DESCRIPTION	BY

APPROVAL RECORD	DATE	ISSUED	APP DATE	APPROVAL STATUS
	08-16-21	FABRICATION		

STATE	OHIO
COUNTY	CUYAHOGA (CITY OF CLEVELAND)
PROJECT	3000 (17)
CONTRACT	PID 96833
SECTION	
STRUCTURE	
STATE JOB	
CUSTOMER	LAKE ERIE CONSTRUCTION COMPANY
CONTRACTOR	
ARCH/ENG	
REFERENCE	
ITEM	
FINISH	SEE NOTES-SHT E400

DRAWN BY	CHECKED BY	MRH NO	JOB MGR	DWG STATUS	JOB NO.	TOTAL SHEETS	SHEET
MRH 07-21-21	SRF 08-12-21	1914	JL	FABRICATION 08-16-21	19-1108		494

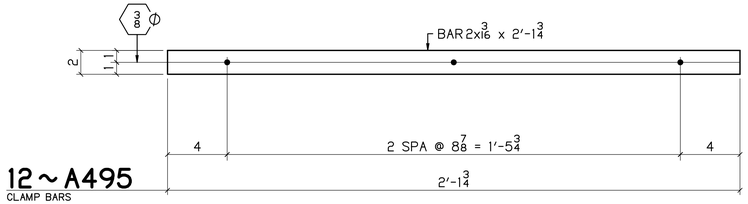

12 ~ A495
CLAMP BARS

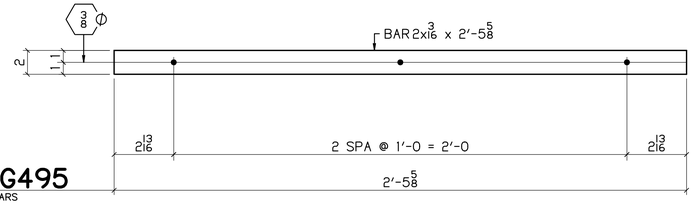

2 ~ G495
CLAMP BARS

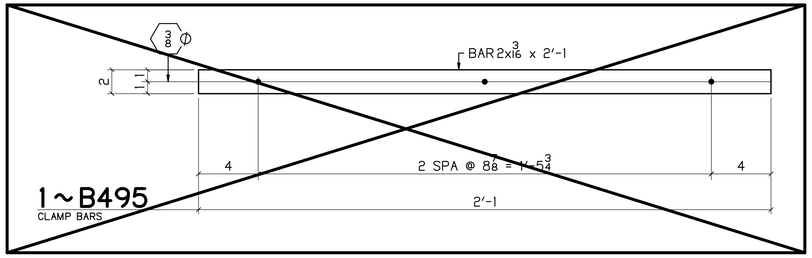

1 ~ B495
CLAMP BARS

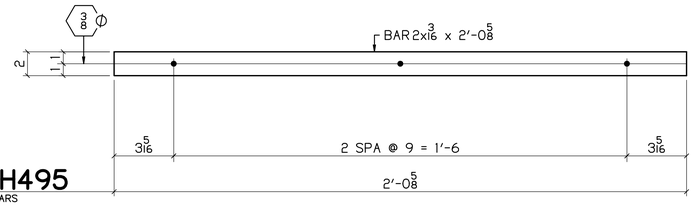

2 ~ H495
CLAMP BARS

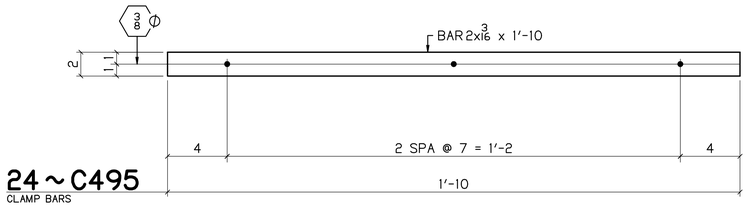

24 ~ C495
CLAMP BARS

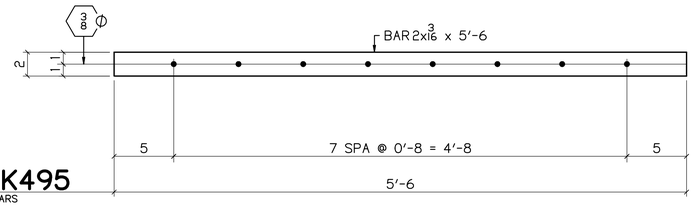

5 ~ K495
CLAMP BARS

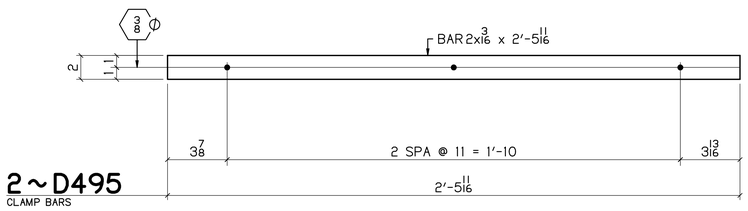

2 ~ D495
CLAMP BARS

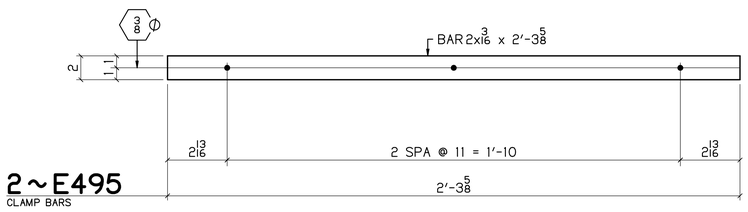

2 ~ E495
CLAMP BARS

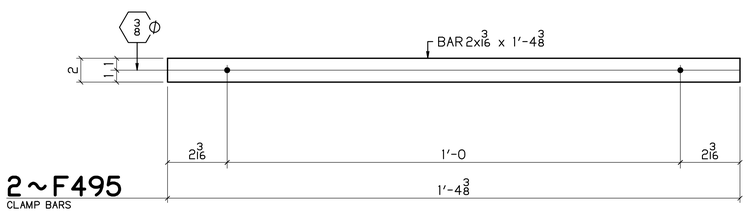

2 ~ F495
CLAMP BARS

BILL OF MATERIAL

NO	MK	NO	SUBMK	MATERIAL	FT	IN	REMARKS	SORT
12	A495			BAR 2x1 3/16	2	3/14	SC2E	B
24	C495			BAR 2x1 3/16	1	10	SC2E	B
2	D495			BAR 2x1 3/16	2	5 11/16	SC2E	B
2	E495			BAR 2x1 3/16	2	3 5/8	SC2E	B
2	F495			BAR 2x1 3/16	1	4 3/8	SC2E	B
2	G495			BAR 2x1 3/16	2	5 5/8	SC2E	B
2	H495			BAR 2x1 3/16	2	0 5/8	SC2E	B
5	K495			BAR 2x1 3/16	5	6	SC2E	B

BU-19 BLUE-GREEN LINES
100% COMPLETE 08-16-21

P.H. DREW INC.
2450 N. RACEWAY RD. - P.O. BOX 34295
INDIANAPOLIS, INDIANA 46234
PHONE : (317) 297-5152
FAX : (317) 297-5313

APPROVAL
APPROVED 08-03-21

CUY-IR490 / SR010-2.09 / 19.28

DECORATIVE FENCE

CLAMP BARS

REVISION	REV	DATE	DESCRIPTION	BY

APPROVAL RECORD	DATE	ISSUED	APP DATE	APPROVAL STATUS
	08-16-21	FABRICATION		

STATE	OHIO
COUNTY	CUYAHOGA (CITY OF CLEVELAND)
PROJECT	3000 (17)
CONTRACT	PID 96833
SECTION	
STRUCTURE	
STATE JOB	
CUSTOMER	LAKE ERIE CONSTRUCTION COMPANY
CONTRACTOR	
ARCH/ENG	
REFERENCE	
ITEM	
FINISH	SEE NOTES-SHT E400

DRAWN BY	CHECKED BY	MRH NO	JOB MGR	DWG STATUS	JOB NO.	TOTAL SHEETS	SHEET
MRH 07-21-21	SRF 08-12-21	1914	JL	FABRICATION 08-16-21	19-1108		495

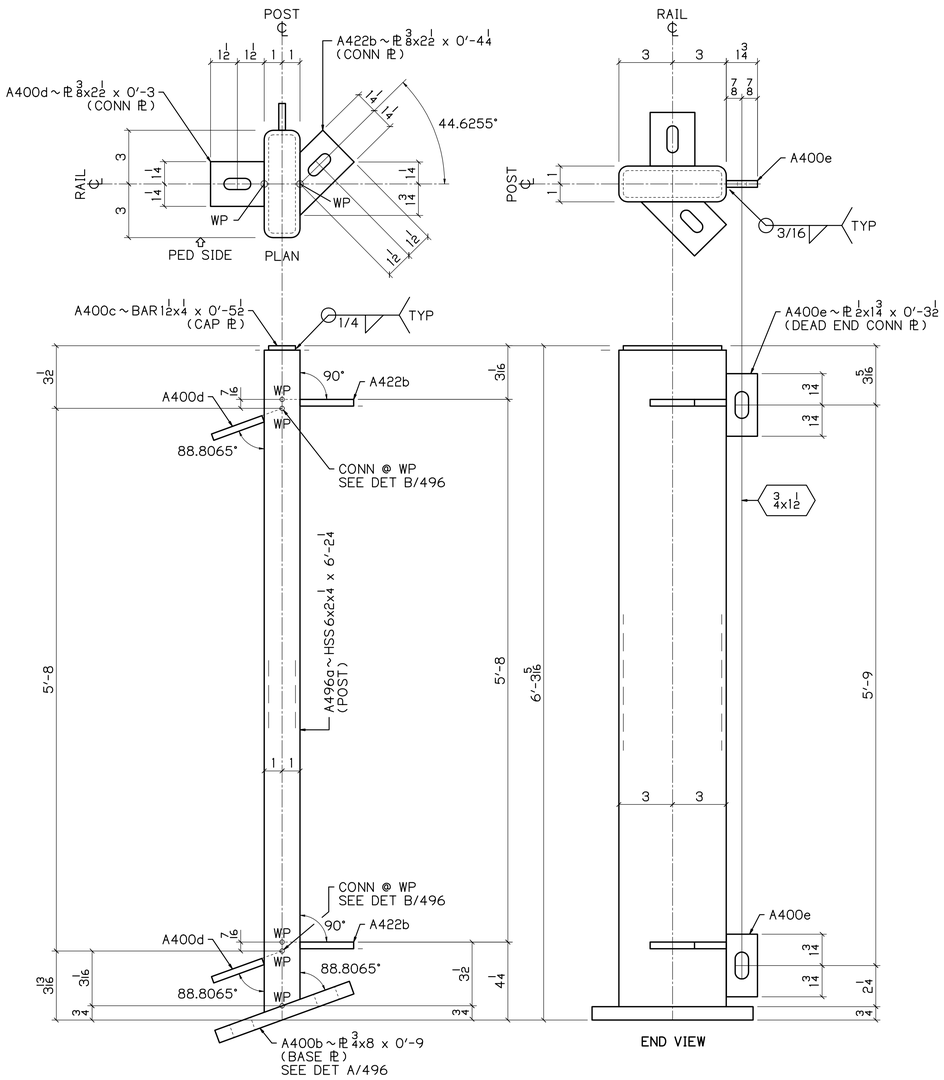

2 ~ A496

POSTS
DEAD END CONNECTION
PEDESTRIAN SIDE SHOWN

1.1935° | 1/4
12

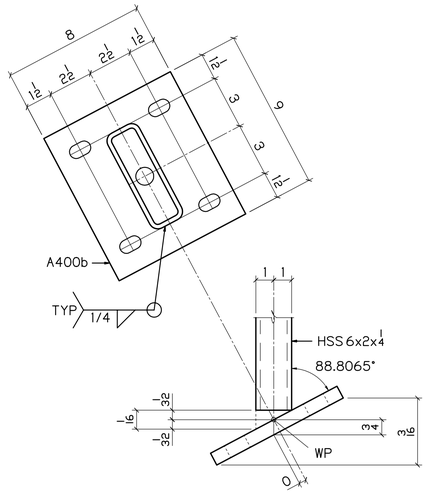

DETAIL A / 496

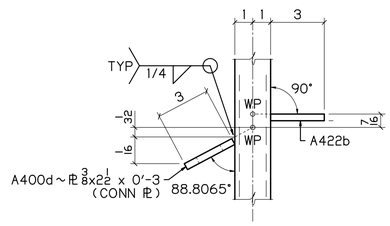

DETAIL B / 496

BILL OF MATERIAL

NO	MK	NO	SUBMK	MATERIAL	FT	IN	REMARKS	SORT
2	A496			END POST				MM
		2	A496a	HSS 6x2x4 1/4	6	2 1/4	SC2E	TS
		4	A422b	PL 3/8x2 1/2	0	4 1/4	CONN PL	PL
		2	A400b	PL 3/4x8	0	9	BASE PL	PL
		2	A400c	BAR 1 1/2x4 1/4	0	5 1/2	CAP PL	B
		4	A400d	PL 3/8x2 1/2	0	3	CONN PL	PL
		4	A400e	PL 1/2x1 3/4	0	3 1/2	DEAD END CONN PL	PL

BU-19 BLUE-GREEN LINES
100% COMPLETE 08-16-21

P.H. DREW INC.
2450 N. RACEWAY RD. - P.O. BOX 34295
INDIANAPOLIS, INDIANA 46234
PHONE : (317) 297-5152
FAX : (317) 297-5313

APPROVAL
APPROVED 08-03-21

CUY-IR490 / SR010-2.09 / 19.28

DECORATIVE FENCE

POSTS

REVISION	REV	DATE	DESCRIPTION	BY

STATE	OHIO
COUNTY	CUYAHOGA (CITY OF CLEVELAND)
PROJECT	3000 (17)
CONTRACT	PID 96833
SECTION	
STRUCTURE	
STATE JOB	

APPROVAL RECORD	DATE	ISSUED	APP DATE	APPROVAL STATUS
	08-16-21	FABRICATION		

CUSTOMER	LAKE ERIE CONSTRUCTION COMPANY
CONTRACTOR	
ARCH/ENG	
REFERENCE	
ITEM	
FINISH	SEE NOTES-SHT E400

DRAWN BY	CHECKED BY	MRH NO	JOB MGR	DWG STATUS	JOB NO.	TOTAL SHEETS	SHEET
MRH 07-11-21	SRF 08-12-21	1914	JL	FABRICATION 08-16-21	19-1108		496A

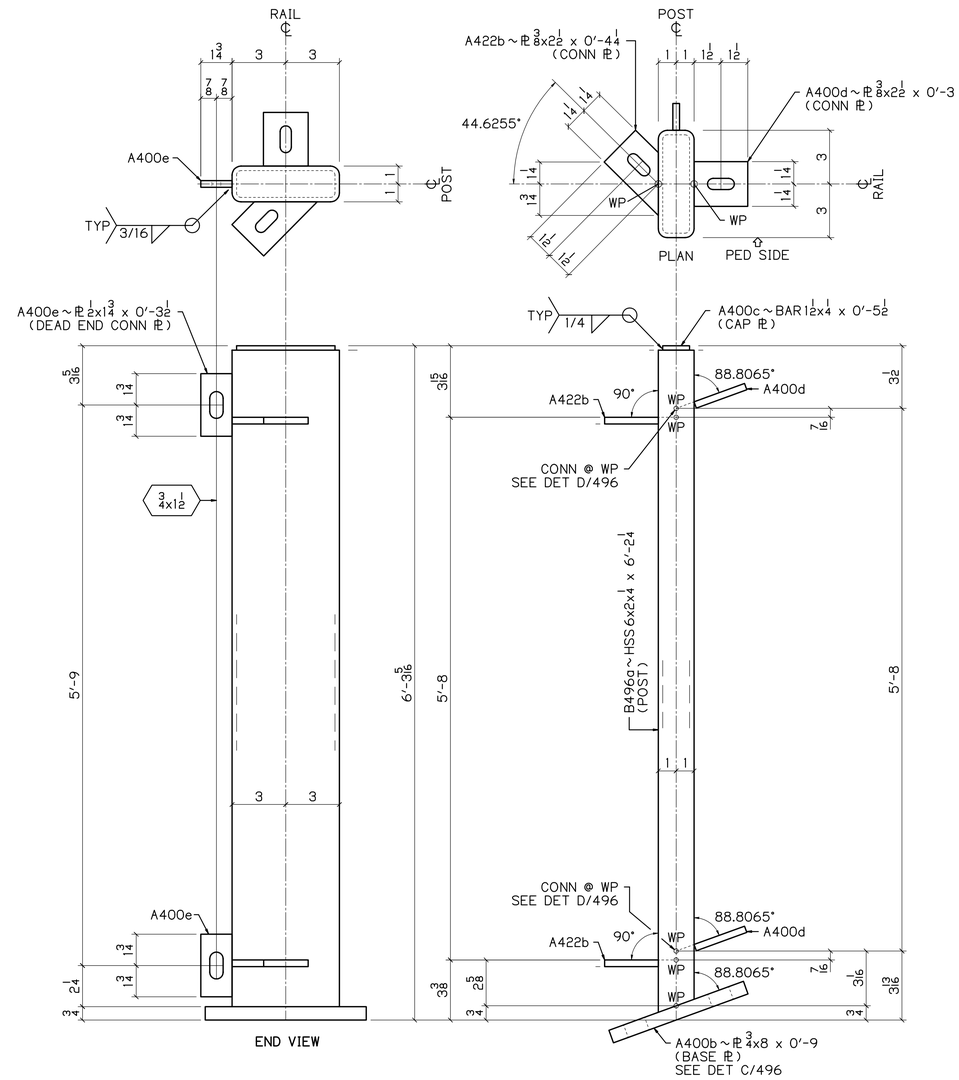

2 ~ B496

POSTS
DEAD END CONNECTION
PEDESTRIAN SIDE SHOWN

1.1935* | 1/4
12

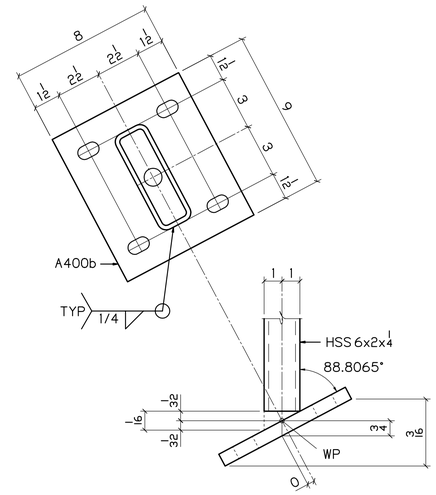

DETAIL C / 496

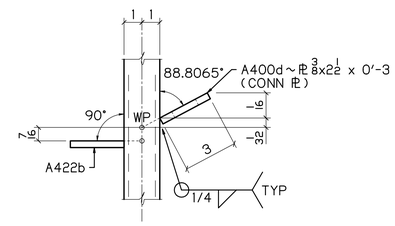

DETAIL D / 496

BILL OF MATERIAL

NO	MK	NO	SUBMK	MATERIAL	FT	IN	REMARKS	SORT
2	B496			END POST				MM
		2	B496a	HSS 6x2x4 1/4	6	2 1/4	SC2E	TS
		4	A422b	PL 3/8x2 1/2	0	4 1/4	CONN PL	PL
		2	A400b	PL 3/4x8	0	9	BASE PL	PL
		2	A400c	BAR 1 1/2x4 1/4	0	5 1/2	CAP PL	B
		4	A400d	PL 3/8x2 1/2	0	3	CONN PL	PL
		4	A400e	PL 1/2x1 3/4	0	3 1/2	DEAD END CONN PL	PL

BU-19 BLUE-GREEN LINES
100% COMPLETE 08-16-21

P.H. DREW INC.
2450 N. RACEWAY RD. - P.O. BOX 34295
INDIANAPOLIS, INDIANA 46234
PHONE : (317) 297-5152
FAX : (317) 297-5313

APPROVAL
APPROVED 08-03-21

CUY-IR490 / SR010-2.09 / 19.28

DECORATIVE FENCE

POSTS

REVISION REV	DATE	DESCRIPTION	BY

APPROVAL RECORD DATE	ISSUED	APP DATE	APPROVAL STATUS
08-16-21	FABRICATION		

STATE	OHIO
COUNTY	CUYAHOGA (CITY OF CLEVELAND)
PROJECT	3000 (17)
CONTRACT	PID 96833
SECTION	
STRUCTURE	
STATE JOB	
CUSTOMER	LAKE ERIE CONSTRUCTION COMPANY
CONTRACTOR	
ARCH/ENG	
REFERENCE	
ITEM	
FINISH	SEE NOTES-SHT E400

DRAWN BY	CHECKED BY	MRH NO	JOB MGR	DWG STATUS	JOB NO.	TOTAL SHEETS	SHEET
MRH 07-11-21	SRF 08-12-21	1914	JL	FABRICATION 08-16-21	19-1108		496B

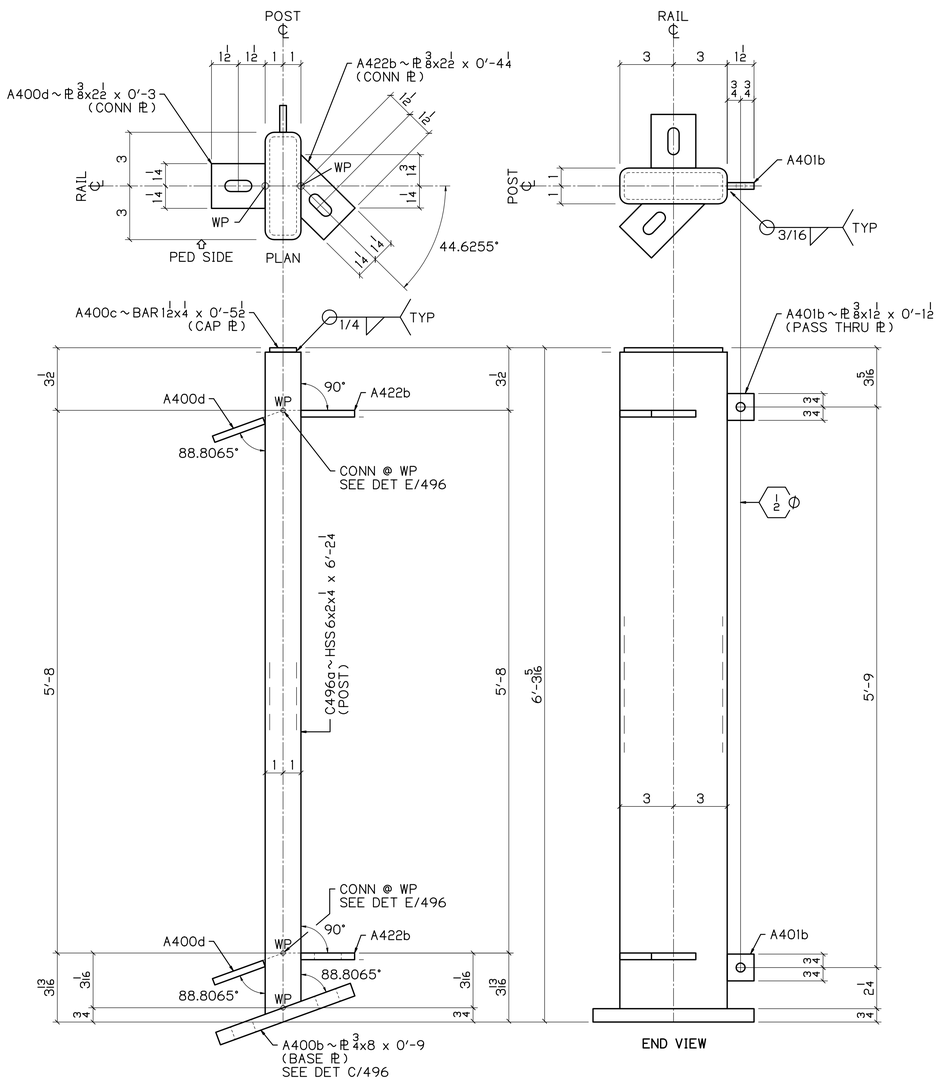

2 ~ C496

POSTS
PASS THRU
PEDESTRIAN SIDE SHOWN

1.1935* 1/4 / 12

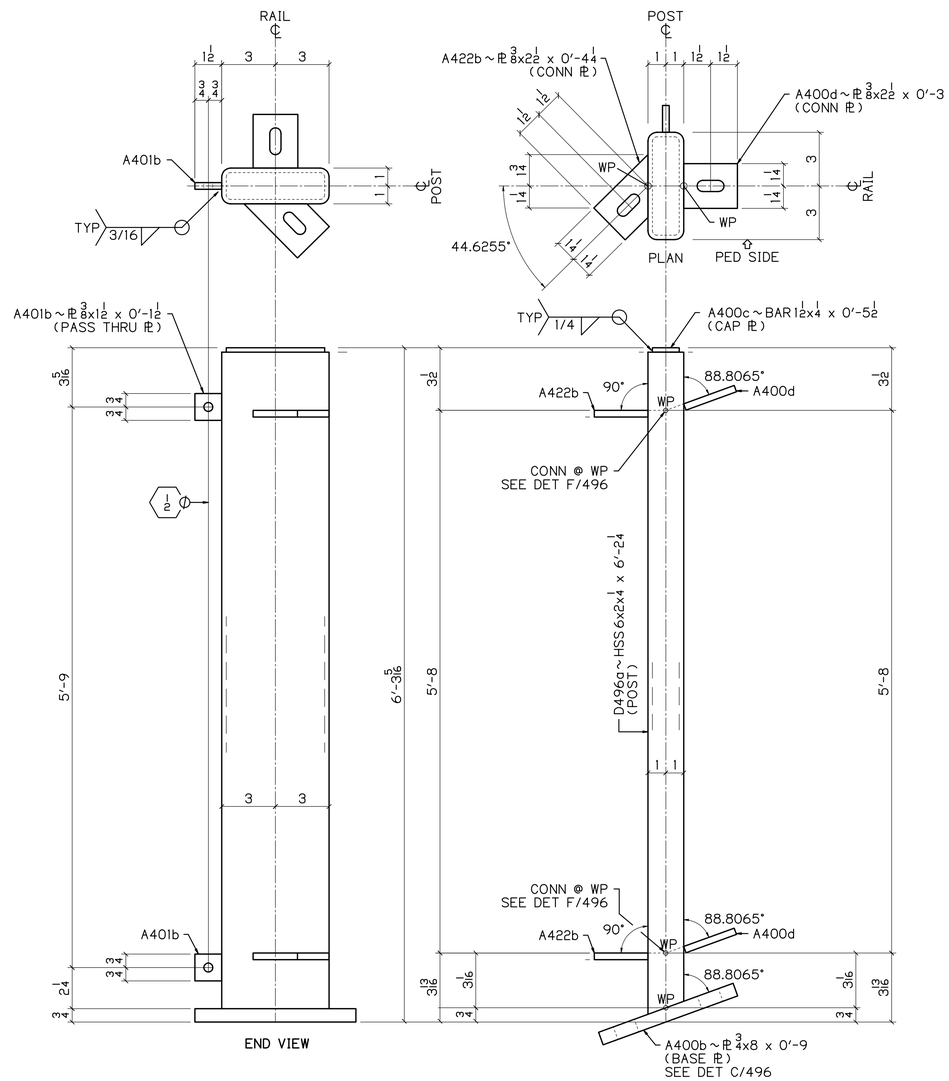

2 ~ D496

POSTS
PASS THRU
PEDESTRIAN SIDE SHOWN

1.1935* 1/4 / 12

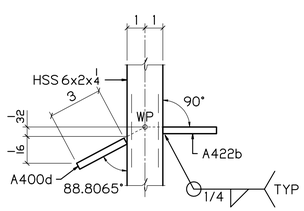

DETAIL E / 496

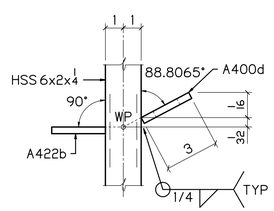

DETAIL F / 496

BILL OF MATERIAL

NO	MK	NO	SUBMK	MATERIAL	FT	IN	REMARKS	SORT
2	C496			END POST				MM
		2	C496a	HSS 6x2x1/4	6	2 1/4	SC2E	TS
		4	A422b	PL 3/8x2 1/2	0	4 1/4	CONN PL	PL
		2	A400b	PL 3/4x8	0	9	BASE PL	PL
		2	A400c	BAR 1 1/2x1/4	0	5 1/2	CAP PL	B
		4	A500d	PL 3/8x2 1/2	0	3	CONN PL	PL
		4	A401b	PL 1/2x1 1/2	0	1 1/2	PASS THRU PL	PL
2	D496			END POST				MM
		2	D496a	HSS 6x2x1/4	6	2 1/4	SC2E	TS
		4	A422b	PL 3/8x2 1/2	0	4 1/4	CONN PL	PL
		2	A400b	PL 3/4x8	0	9	BASE PL	PL
		2	A400c	BAR 1 1/2x1/4	0	5 1/2	CAP PL	B
		4	A500d	PL 3/8x2 1/2	0	3	CONN PL	PL
		4	A401b	PL 1/2x1 1/2	0	1 1/2	PASS THRU PL	PL

BU-19 BLUE-GREEN LINES
100% COMPLETE 08-16-21

P.H. DREW INC.
2450 N. RACEWAY RD. - P.O. BOX 34295
INDIANAPOLIS, INDIANA 46234
PHONE : (317) 297-5152
FAX : (317) 297-5313

APPROVAL: APPROVED 08-03-21

CUY-IR490 / SR010-2.09 / 19.28

DECORATIVE FENCE

POSTS

REVISION

REV	DATE	DESCRIPTION	BY

STATE	OHIO
COUNTY	CUYAHOGA (CITY OF CLEVELAND)
PROJECT	3000 (17)
CONTRACT	PID 96833
SECTION	
STRUCTURE	
STATE JOB	

APPROVAL RECORD

DATE	ISSUED	APP DATE	APPROVAL STATUS
08-16-21	FABRICATION		

CUSTOMER	LAKE ERIE CONSTRUCTION COMPANY
CONTRACTOR	
ARCH/ENG	
REFERENCE	
ITEM	
FINISH	SEE NOTES - SHT E400

DRAWN BY	CHECKED BY	MRH NO	JOB MGR	DWG STATUS	JOB NO.	TOTAL SHEETS	SHEET
MRH 07-11-21	SRF 08-12-21	1914	JL	FABRICATION 08-16-21	19-1108		496C

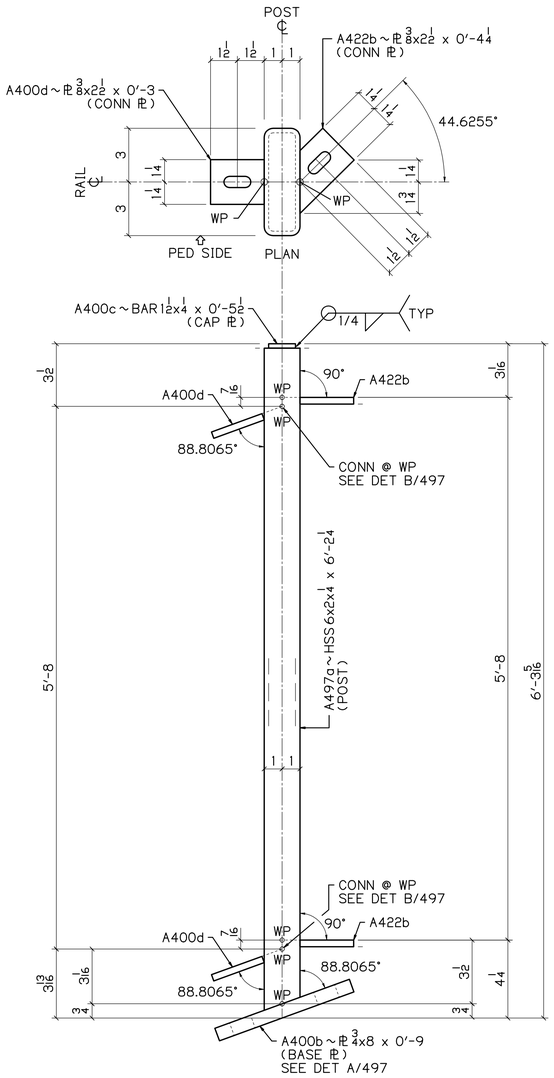

1 ~ A497

POSTS
DEAD END CONNECTION
PEDESTRIAN SIDE SHOWN

1.1935" 1/4 / 12

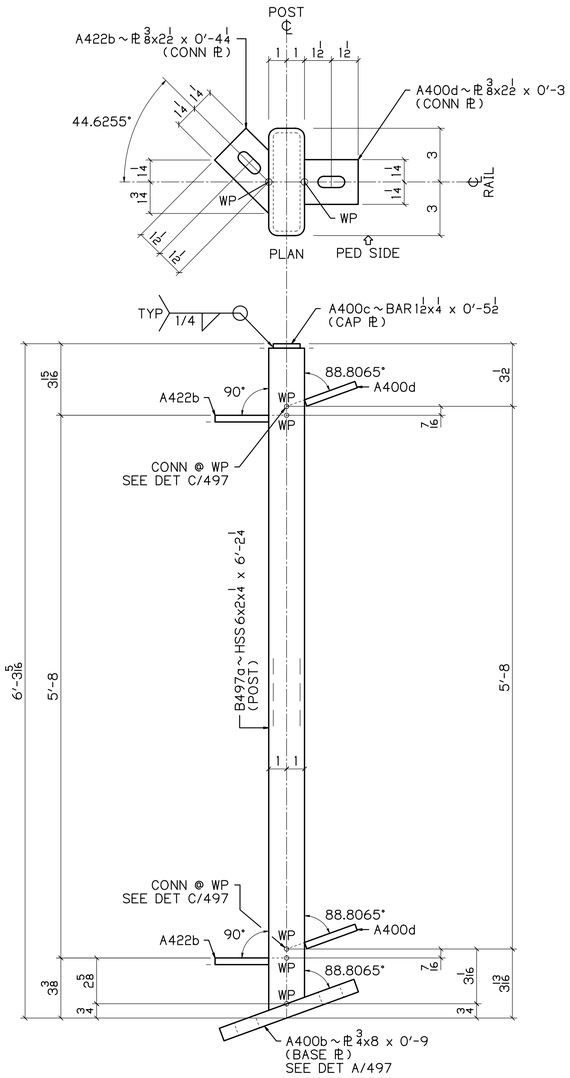

1 ~ B497

POSTS
DEAD END CONNECTION
PEDESTRIAN SIDE SHOWN

1.1935" 1/4 / 12

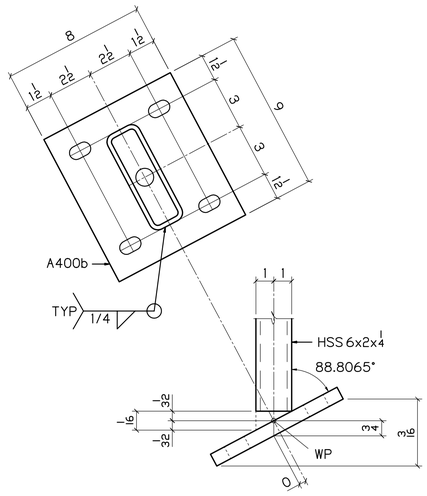

DETAIL A / 497

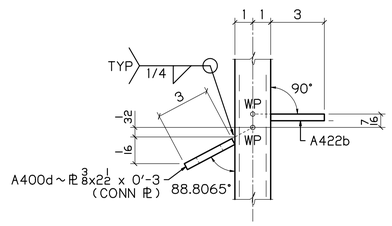

DETAIL B / 497

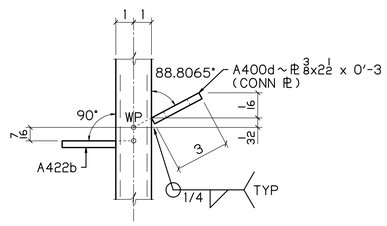

DETAIL C / 497

BILL OF MATERIAL

NO	MK	NO	SUBMK	MATERIAL	FT	IN	REMARKS	SORT
1	A497			END POST				MM
		1	A497a	HSS 6x2x1/4	6	2 1/4	SC2E	TS
		2	A422b	PL 3/8x2 1/2	0	4 1/4	CONN PL	PL
		1	A400b	PL 3/4x8	0	9	BASE PL	PL
		1	A400c	BAR 1 1/2x4 1/4	0	5 1/2	CAP PL	B
		2	A400d	PL 3/8x2 1/2	0	3	CONN PL	PL
1	B497			END POST				MM
		1	B497a	HSS 6x2x1/4	6	2 1/4	SC2E	TS
		2	A422b	PL 3/8x2 1/2	0	4 1/4	CONN PL	PL
		1	A400b	PL 3/4x8	0	9	BASE PL	PL
		1	A400c	BAR 1 1/2x4 1/4	0	5 1/2	CAP PL	B
		2	A400d	PL 3/8x2 1/2	0	3	CONN PL	PL

BU-19 BLUE-GREEN LINES
100% COMPLETE 08-16-21

P.H. DREW INC.
2450 N. RACEWAY RD. - P.O. BOX 34295
INDIANAPOLIS, INDIANA 46234
PHONE : (317) 297-5152
FAX : (317) 297-5313

APPROVAL: APPROVED 08-03-21

CUY-IR490 / SR010-2.09 / 19.28

DECORATIVE FENCE

POSTS

REVISION	REV	DATE	DESCRIPTION	BY

APPROVAL RECORD	DATE	ISSUED	APP DATE	APPROVAL STATUS
	08-16-21	FABRICATION		

STATE	OHIO
COUNTY	CUYAHOGA (CITY OF CLEVELAND)
PROJECT	3000 (17)
CONTRACT	PID 96833
SECTION	
STRUCTURE	
STATE JOB	
CUSTOMER	LAKE ERIE CONSTRUCTION COMPANY
CONTRACTOR	
ARCH/ENG	
REFERENCE	
ITEM	
FINISH	SEE NOTES - SHT E400

DRAWN BY	CHECKED BY	MRH NO	JOB MGR	DWG STATUS	JOB NO.	TOTAL SHEETS	SHEET
MRH 07-11-21	SRF 08-12-21	1914	JL	FABRICATION 08-16-21	19-1108		497A

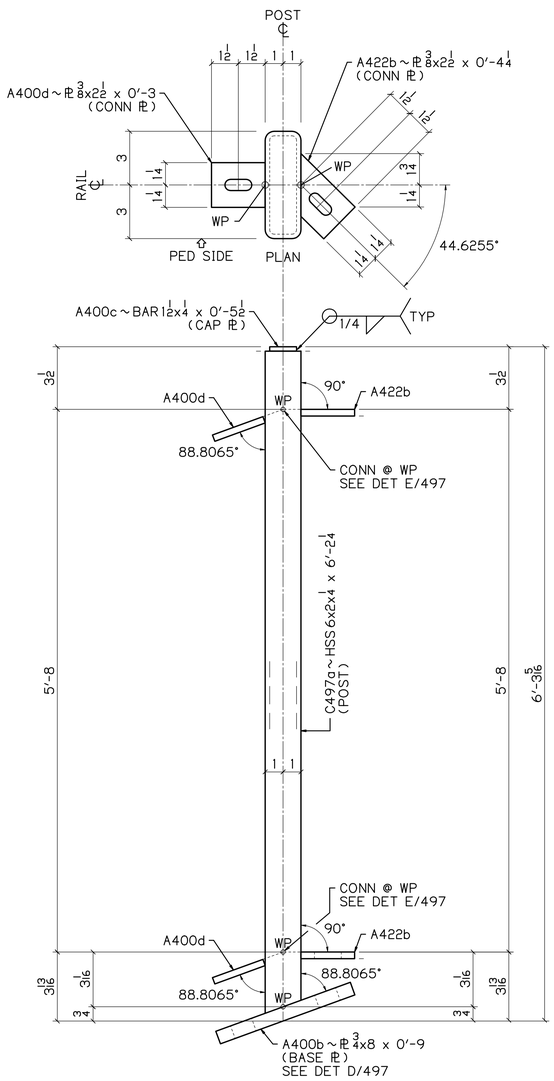

1 ~ C497

POSTS
PASS THRU
PEDESTRIAN SIDE SHOWN

1.1935" | 1/4
12

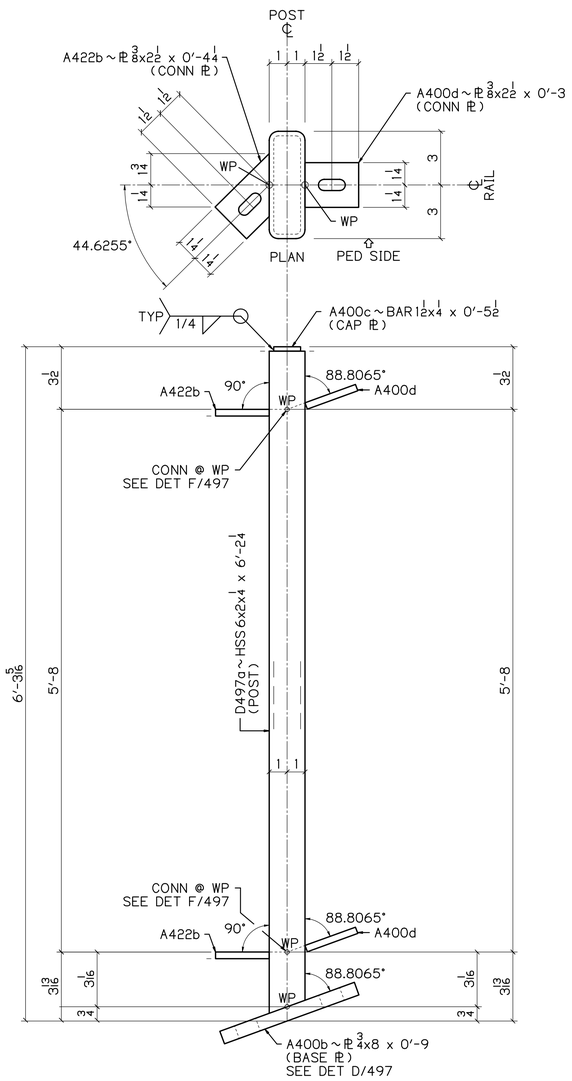

1 ~ D497

POSTS
PASS THRU
PEDESTRIAN SIDE SHOWN

1.1935" | 1/4
12

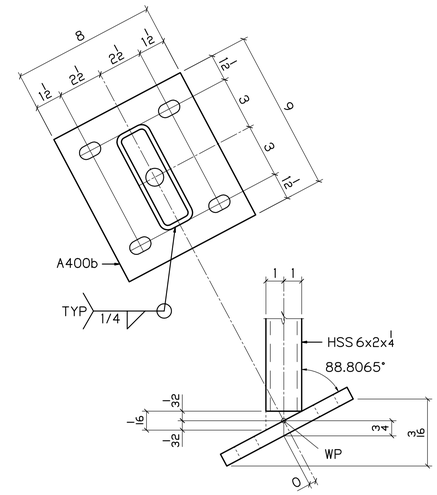

DETAIL D / 497

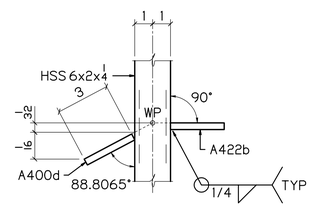

DETAIL E / 497

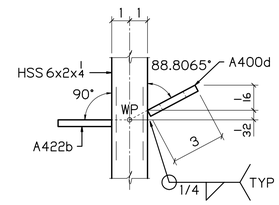

DETAIL F / 497

BILL OF MATERIAL

NO	MK	NO	SUBMK	MATERIAL	FT	IN	REMARKS	SORT
1	C497			END POST				MM
		1	C497a	HSS 6x2x1/4	6	2 1/4	SC2E	TS
		2	A422b	PL 3/8x2 1/2	0	4 1/4	CONN PL	PL
		1	A400b	PL 3/4x8	0	9	BASE PL	PL
		1	A400c	BAR 1 1/2x1/4	0	5 1/2	CAP PL	B
		2	A500d	PL 3/8x2 1/2	0	3	CONN PL	PL
1	D497			END POST				MM
		1	D497a	HSS 6x2x1/4	6	2 1/4	SC2E	TS
		2	A422b	PL 3/8x2 1/2	0	4 1/4	CONN PL	PL
		1	A400b	PL 3/4x8	0	9	BASE PL	PL
		1	A400c	BAR 1 1/2x1/4	0	5 1/2	CAP PL	B
		2	A500d	PL 3/8x2 1/2	0	3	CONN PL	PL

BU-19 BLUE-GREEN LINES
100% COMPLETE 08-16-21

P.H. DREW INC.
2450 N. RACEWAY RD. - P.O. BOX 34295
INDIANAPOLIS, INDIANA 46234
PHONE : (317) 297-5152
FAX : (317) 297-5313

APPROVAL: APPROVED 08-03-21

CUY-IR490 / SR010-2.09 / 19.28

DECORATIVE FENCE

POSTS

REVISION

REV	DATE	DESCRIPTION	BY

APPROVAL RECORD

DATE	ISSUED	APP DATE	APPROVAL STATUS
08-16-21	FABRICATION		

STATE	OHIO
COUNTY	CUYAHOGA (CITY OF CLEVELAND)
PROJECT	3000 (17)
CONTRACT	PID 96833
SECTION	
STRUCTURE	
STATE JOB	
CUSTOMER	LAKE ERIE CONSTRUCTION COMPANY
CONTRACTOR	
ARCH/ENG	
REFERENCE	
ITEM	
FINISH	SEE NOTES - SHT E400

DRAWN BY	CHECKED BY	MRH NO	JOB MGR	DWG STATUS	JOB NO.	TOTAL SHEETS	SHEET
MRH 07-11-21	SRF 08-12-21	1914	JL	FABRICATION 08-16-21	19-1108		497B

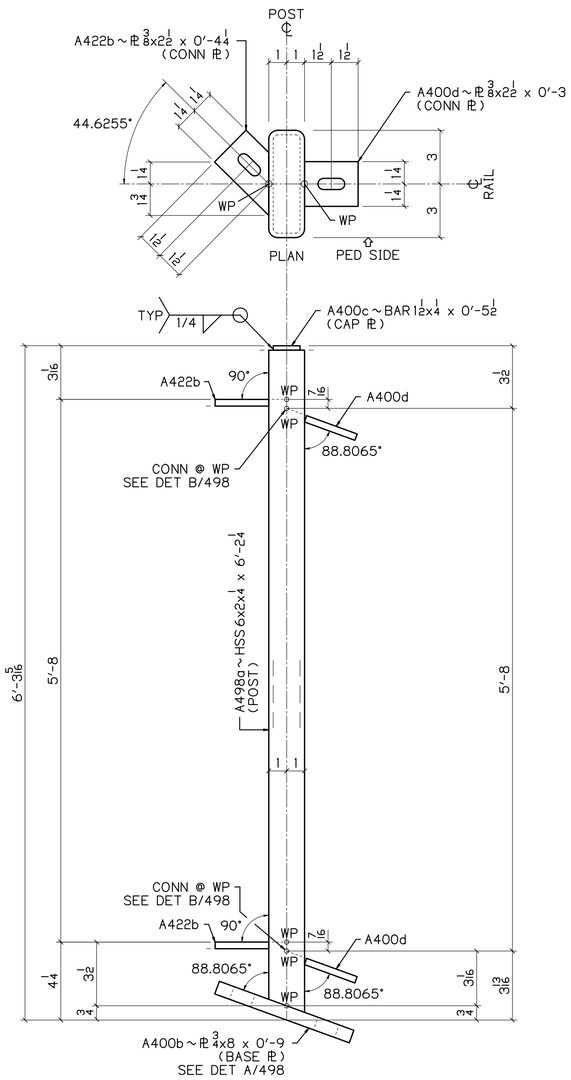

1 ~ A498

POSTS
DEAD END CONNECTION
PEDESTRIAN SIDE SHOWN

1/4 | 1.1935° / 12

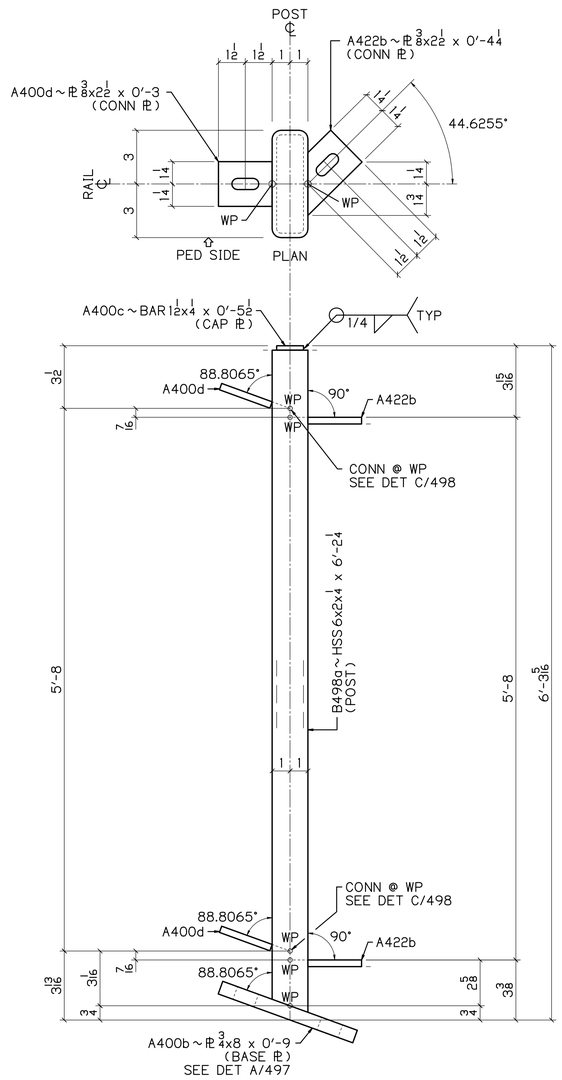

1 ~ B498

POSTS
DEAD END CONNECTION
PEDESTRIAN SIDE SHOWN

1.1935° / 12 | 1/4

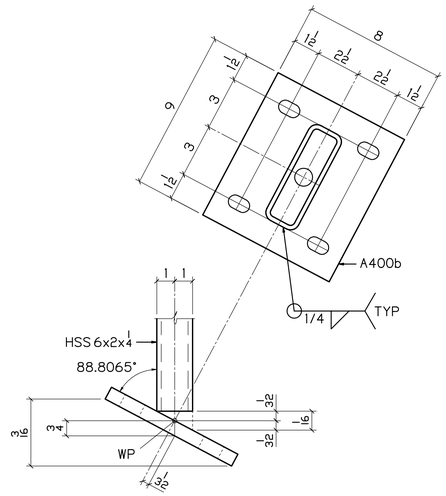

DETAIL A / 498

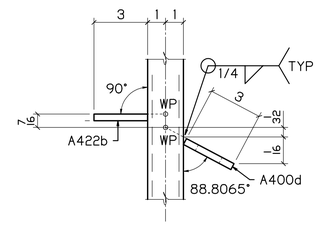

DETAIL B / 498

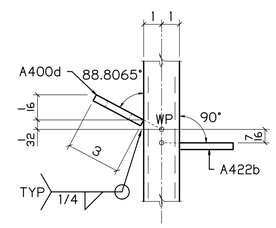

DETAIL C / 498

BILL OF MATERIAL

NO	MK	NO	SUBMK	MATERIAL	FT	IN	REMARKS	SORT
1	A498			END POST				MM
		1	A498a	HSS 6x2x1/4	6	2 1/4	SC2E	TS
		2	A422b	PL 3/8x2 1/2	0	4 1/4	CONN PL	PL
		1	A400b	PL 3/4x8	0	9	BASE PL	PL
		1	A400c	BAR 1 1/2x1/4	0	5 1/2	CAP PL	B
		2	A400d	PL 3/8x2 1/2	0	3	CONN PL	PL
1	B498			END POST				MM
		1	B498a	HSS 6x2x1/4	6	2 1/4	SC2E	TS
		2	A422b	PL 3/8x2 1/2	0	4 1/4	CONN PL	PL
		1	A400b	PL 3/4x8	0	9	BASE PL	PL
		1	A400c	BAR 1 1/2x1/4	0	5 1/2	CAP PL	B
		2	A400d	PL 3/8x2 1/2	0	3	CONN PL	PL

BU-19 BLUE-GREEN LINES
100% COMPLETE 08-16-21

P.H. DREW INC.
2450 N. RACEWAY RD. - P.O. BOX 34295
INDIANAPOLIS, INDIANA 46234
PHONE : (317) 297-5152
FAX : (317) 297-5313

APPROVAL: APPROVED 08-03-21

CUY-IR490 / SR010-2.09 / 19.28

DECORATIVE FENCE

POSTS

REVISION

REV	DATE	DESCRIPTION	BY

APPROVAL RECORD

DATE	ISSUED	APP DATE	APPROVAL STATUS
08-16-21	FABRICATION		

STATE	OHIO
COUNTY	CUYAHOGA (CITY OF CLEVELAND)
PROJECT	3000 (17)
CONTRACT	PID 96833
SECTION	
STRUCTURE	
STATE JOB	
CUSTOMER	LAKE ERIE CONSTRUCTION COMPANY
CONTRACTOR	
ARCH/ENG	
REFERENCE	
ITEM	
FINISH	SEE NOTES - SHT E400

DRAWN BY	CHECKED BY	MRH NO	JOB MGR	DWG STATUS	JOB NO.	TOTAL SHEETS	SHEET
MRH 07-11-21	SRF 08-12-21	1914	JL	FABRICATION 08-16-21	19-1108		498A

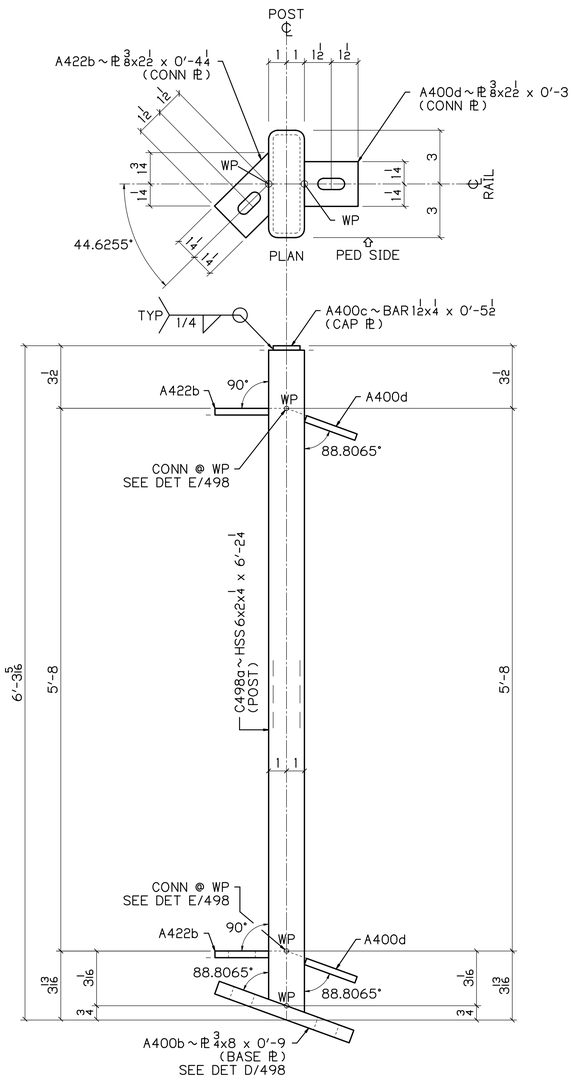

1 ~ C498

POSTS
PASS THRU
PEDESTRIAN SIDE SHOWN

1.1935° / 12 | 1/4

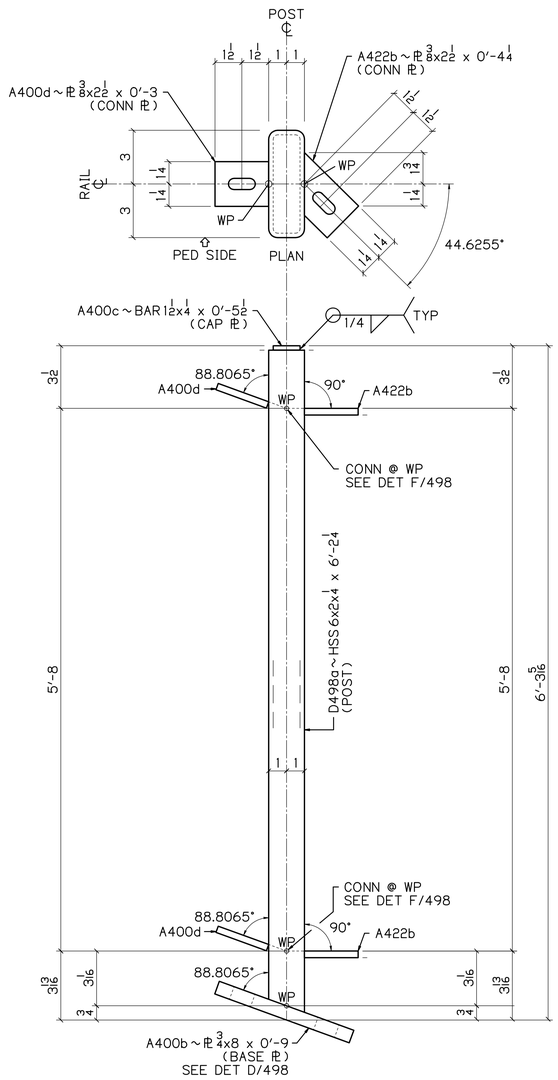

1 ~ D498

POSTS
PASS THRU
PEDESTRIAN SIDE SHOWN

1.1935° / 12 | 1/4

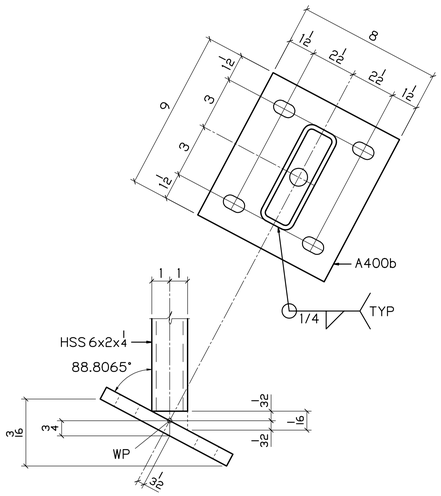

DETAIL D / 498

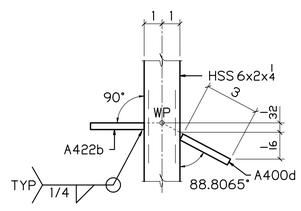

DETAIL E / 498

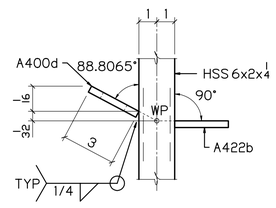

DETAIL F / 498

BILL OF MATERIAL

NO	MK	NO	SUBMK	MATERIAL	FT	IN	REMARKS	SORT
1	C498			END POST				MM
		1	C498a	HSS 6x2x1/4	6	2 1/4	SC2E	TS
		2	A422b	PL 3/8x2 1/2	0	4 1/4	CONN PL	PL
		1	A400b	PL 3/4x8	0	9	BASE PL	PL
		1	A400c	BAR 1 1/2x1/4	0	5 1/2	CAP PL	B
		2	A500d	PL 3/8x2 1/2	0	3	CONN PL	PL
1	D498			END POST				MM
		1	D498a	HSS 6x2x1/4	6	2 1/4	SC2E	TS
		2	A422b	PL 3/8x2 1/2	0	4 1/4	CONN PL	PL
		1	A400b	PL 3/4x8	0	9	BASE PL	PL
		1	A400c	BAR 1 1/2x1/4	0	5 1/2	CAP PL	B
		2	A500d	PL 3/8x2 1/2	0	3	CONN PL	PL

BU-19 BLUE-GREEN LINES
100% COMPLETE 08-16-21

P.H. DREW INC.
2450 N. RACEWAY RD. - P.O. BOX 34295
INDIANAPOLIS, INDIANA 46234
PHONE : (317) 297-5152
FAX : (317) 297-5313

APPROVAL: APPROVED 08-03-21

CUY-IR490 / SR010-2.09 / 19.28

DECORATIVE FENCE

POSTS

REVISION

REV	DATE	DESCRIPTION	BY

APPROVAL RECORD

DATE	ISSUED	APP DATE	APPROVAL STATUS
08-16-21	FABRICATION		

STATE	OHIO
COUNTY	CUYAHOGA (CITY OF CLEVELAND)
PROJECT	3000 (17)
CONTRACT	PID 96833
SECTION	
STRUCTURE	
STATE JOB	
CUSTOMER	LAKE ERIE CONSTRUCTION COMPANY
CONTRACTOR	
ARCH/ENG	
REFERENCE	
ITEM	
FINISH	SEE NOTES - SHT E400

DRAWN BY	CHECKED BY	MRH NO	JOB MGR	DWG STATUS	JOB NO.	TOTAL SHEETS	SHEET
MRH 07-11-21	SRF 08-12-21	1914	JL	FABRICATION 08-16-21	19-1108		498B